Find us on Facebook

Navigation Tools: Click on the “Table of Contents” below, or use the Bookmarks to the left.

1998 Lincoln Mark VIII
Volume 1 of 2

BISHKO AUTOMOBILE LITERATURE

TABLE OF CONTENTS

INTRODUCTION

GROUP 1 GENERAL INFORMATION

00 Service Information

GROUP 2 CHASSIS

04 Suspension

05 Driveline

06 Brake System

11 Steering System

GROUP 3 POWERTRAIN

03 Engine

07 Automatic Transmission

09 Exhaust System

10 Fuel System

INDEX

Officially Licensed Product
Ford Motor Company

All rights reserved. Reproduction by any means, electronic or mechanical, including photocopying, recording, or by any information storage and retrieval system or translation in whole or part is not permitted without written authorization from Ford Motor Company.
Copyright © 1997, Ford Motor Company

INTRODUCTION

NOTE: The descriptions and specifications contained in this manual were in effect at the time this manual was approved for printing. Ford Motor Company reserves the right to discontinue models at any time, or change specifications or design without notice and without incurring any obligation.

IMPORTANT SAFETY NOTICE

Appropriate service methods and procedures are essential for the safe, reliable operation of all motor vehicles as well as the personal safety of the individual doing the work. This manual provides general directions for performing service with tested, effective techniques. Following them will help assure reliability.

There are numerous variations in procedure, techniques, tools and parts for servicing vehicles, as well as in the skill of the individual doing the work. This manual cannot possibly anticipate all such variations and provide advice or cautions as to each. Accordingly, anyone who departs from the instructions provided in this manual must first establish that he compromises neither his personal safety nor the vehicle integrity by his choice of methods, tools or parts.

Official Licensed Product

NOTES, CAUTIONS, AND WARNINGS

As you read through the procedures, you will come across **NOTES**, **CAUTIONS**, and **WARNINGS**. Each one is there for a specific purpose. **NOTES** give you added information that will help you to perform a particular procedure. **CAUTIONS** are given to prevent you from making an error that could damage the vehicle. **WARNINGS** remind you to be especially careful in those areas where carelessness can cause you personal injury. The following list contains some general **WARNINGS** that you should follow when you work on a vehicle.

- **ALWAYS WEAR SAFETY GLASSES FOR EYE PROTECTION.**
- **USE SAFETY STANDS WHENEVER A PROCEDURE REQUIRES YOU TO BE UNDER THE VEHICLE.**
- **MAKE SURE THAT THE IGNITION SWITCH IS ALWAYS IN THE OFF POSITION, UNLESS OTHERWISE REQUIRED BY THE PROCEDURE.**
- **SET THE PARKING BRAKE WHEN WORKING ON THE VEHICLE. IF YOU HAVE AN AUTOMATIC TRANSMISSION, SET IN PARK UNLESS INSTRUCTED OTHERWISE FOR A SPECIFIC OPERATION. IF YOU HAVE A MANUAL TRANSMISSION, IT SHOULD BE IN REVERSE (ENGINE OFF) OR NEUTRAL (ENGINE ON) UNLESS INSTRUCTED OTHERWISE FOR A SPECIFIC OPERATION. PLACE WOOD BLOCKS (4" X 4" OR LARGER) AGAINST THE FRONT AND REAR SURFACES OF THE TIRES TO HELP PREVENT THE VEHICLE FROM MOVING.**
- **OPERATE THE ENGINE ONLY IN A WELL-VENTILATED AREA TO AVOID THE DANGER OF CARBON MONOXIDE POISONING.**
- **KEEP YOURSELF AND YOUR CLOTHING AWAY FROM MOVING PARTS WHEN THE ENGINE IS RUNNING, ESPECIALLY THE DRIVE BELTS.**
- **TO PREVENT SERIOUS BURNS, AVOID CONTACT WITH HOT METAL PARTS SUCH AS THE RADIATOR, EXHAUST MANIFOLD, TAIL PIPE, THREE-WAY CATALYTIC CONVERTER AND MUFFLER.**
- **DO NOT SMOKE WHILE WORKING ON A VEHICLE.**
- **TO AVOID INJURY, ALWAYS REMOVE RINGS, WATCHES, LOOSE HANGING JEWELRY AND LOOSE CLOTHING BEFORE BEGINNING TO WORK ON A VEHICLE.**
- **WHEN IT IS NECESSARY TO WORK UNDER THE HOOD, KEEP HANDS AND OTHER OBJECTS CLEAR OF THE RADIATOR FAN BLADES!**

GROUP

GENERAL INFORMATION 1

SECTION TITLE	PAGE
Identification Codes	100-01-1
Jacking and Lifting	100-02-1
Noise, Vibration and Harshness	100-04-1

SECTION 100-01 Identification Codes

VEHICLE APPLICATION: Mark VIII

Official Licensed Product
Ford Motor Company

SUBJECT	PAGE
DESCRIPTION AND OPERATION	
Identification Codes	100-01-2
Vehicle Certification (VC) Label	100-01-4

DESCRIPTION AND OPERATION

Identification Codes

The vehicle identification number (VIN) is a seventeen-digit combination of letters and numbers. The VIN is stamped on a metal tab riveted on the instrument panel, top upper left of the dash. The VIN number is also found on the vehicle certification (VC) label.

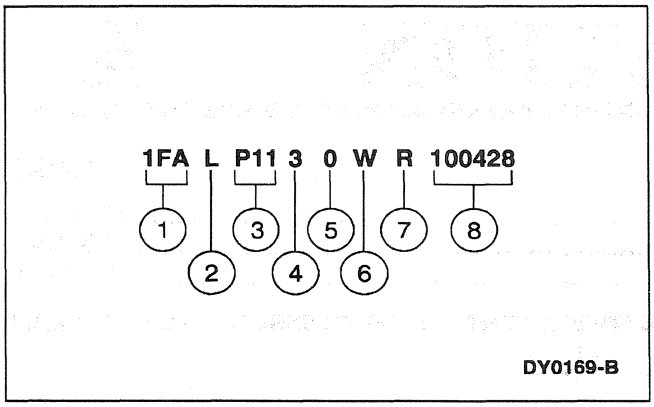

Item	Description
1	World Manufacturer Identifier
2	Restraint Type Code
3	Line, Series, Body Type (Passenger Car)
4	Engine Code
5	VIN Check Digit
6	Model Year Code
7	Assembly Plant Code
8	Production Sequence Number

Vehicle Identification Number

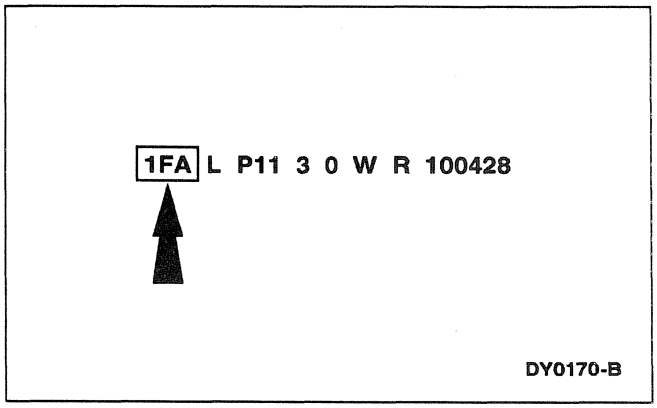

The first three vehicle identification number (VIN) positions are the world manufacturer code.

- 3FA — Ford Motor Company, Mexico, passenger car
- 1FA — Ford Motor Company, USA, passenger car
- 1FD — Ford Motor Company, USA, incomplete vehicle
- 1ME — Ford Motor Company (Mercury), USA, passenger car
- 1MH — Ford Motor Company (Mercury), USA, incomplete vehicle
- 1LN — Ford Motor Company (Lincoln), USA, passenger car
- 1LJ — Ford Motor Company (Lincoln), USA, incomplete vehicle
- 2FA — Ford Motor Company, Canada, passenger car
- 2FD — Ford Motor Company, Canada, incomplete car
- 2ME — Ford Motor Company (Mercury), Canada, passenger car
- 2MH — Ford Motor Company (Mercury), Canada, incomplete vehicle
- 3FE — Ford Motor Company, Mexico, incomplete vehicle
- 3ME — Ford Motor Company (Mercury), Mexico, passenger car

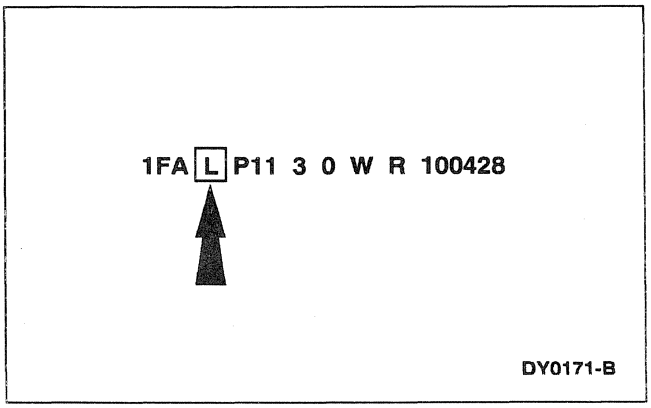

Official Licensed Product

DESCRIPTION AND OPERATION (Continued)

The fourth VIN position is the vehicle restraint system type code.

- B — Active safety belts — front and rear (Mexico only)
- L — Active safety belts — all positions, driver and passenger air bags
- C — Air bag, driver only (Lincoln)
- P — Passive safety belts (Lincoln)

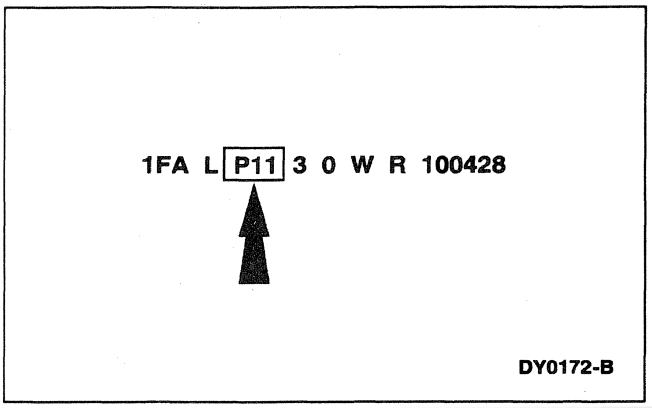

Positions 5 through 7 indicate vehicle line, series and body type.

- P11 — Escort (Coupe 2-door)
- P10 — Escort (Base 4-door)
- P13 — Escort (LX 4-door)
- P15 — Escort (LX station wagon)
- M10 — Tracer (GS 4-door)
- M13 — Tracer (LS 4-door)
- M15 — Tracer (LS station wagon)
- M81 — Lincoln (Town Car Executive Series)
- M82 — Lincoln (Town Car Signature Series)
- M83 — Lincoln (Town Car Designer Series)
- M84 — Lincoln (Town Car LTS Version)
- M91 — Lincoln (Mark VIII)
- M92 — Lincoln (Mark VIII LSC Series)
- M97 — Lincoln (Continental 4-door)

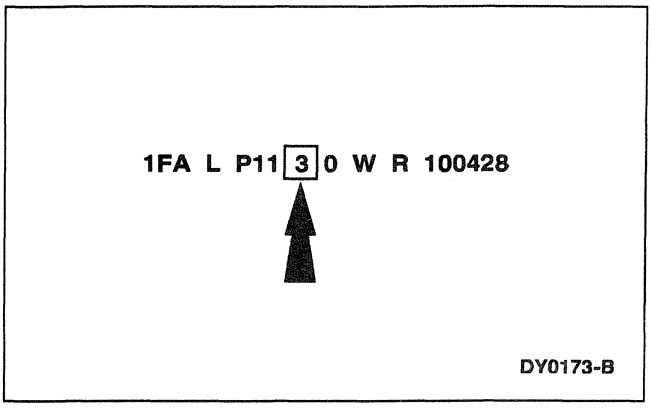

The eighth VIN position is the engine displacement and number of cylinders code.

- 3 — 2.0L EFI DOHC ZETEC four cylinder (Escort)
- P — 2.0L S.P.I. 2000 four cylinder (Escort/Tracer)
- W — 4.6L EFI eight cylinder (Town Car)
- V — 4.6L EFI eight cylinder (Mark VIII, Continental)

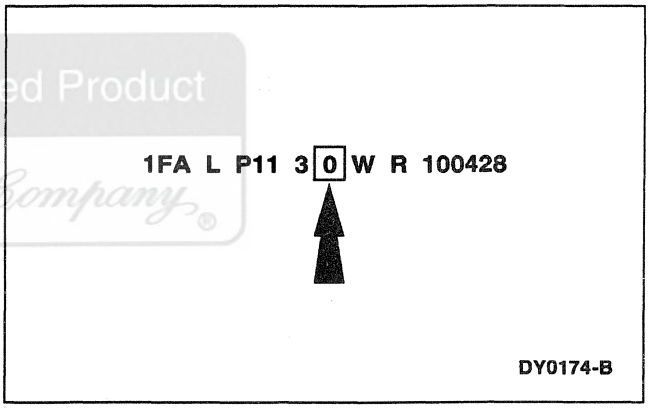

The ninth VIN position is the check digit code (0-9).

Official Licensed Product
Ford Motor Company

DESCRIPTION AND OPERATION (Continued)

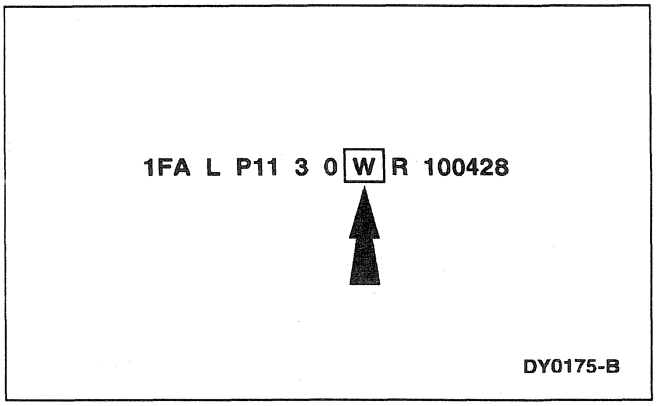

The tenth VIN position is the model year code.

- W — 1998

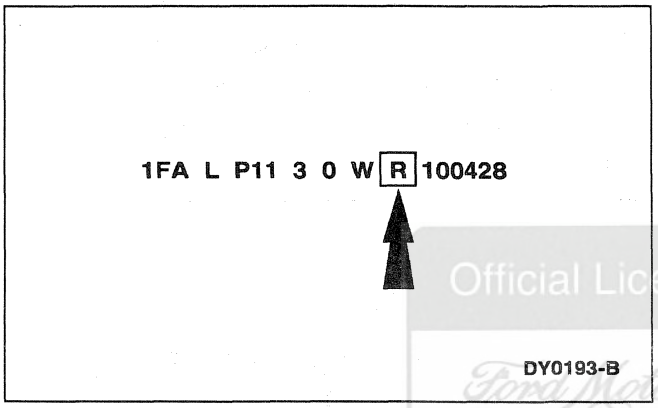

The eleventh VIN position is the assembly plant code.

- R — Hermosillo (Mexico)
- W — Wayne, Michigan (USA)
- Y — Wixom, Michigan (USA)

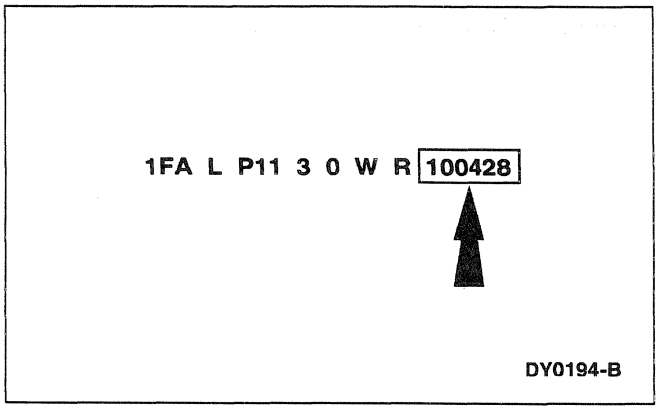

The last six VIN positions are the production sequence number.

- Ford — 100001
- Lincoln/Mercury — 600001

Vehicle Certification (VC) Label

The upper portion of the vehicle certification (VC) label contains the manufacturer name, the month and year of manufacture, the certification statement and the VIN. It also includes gross vehicle weight ratings (GVWR). The VC label is located on the left-hand front door jamb.

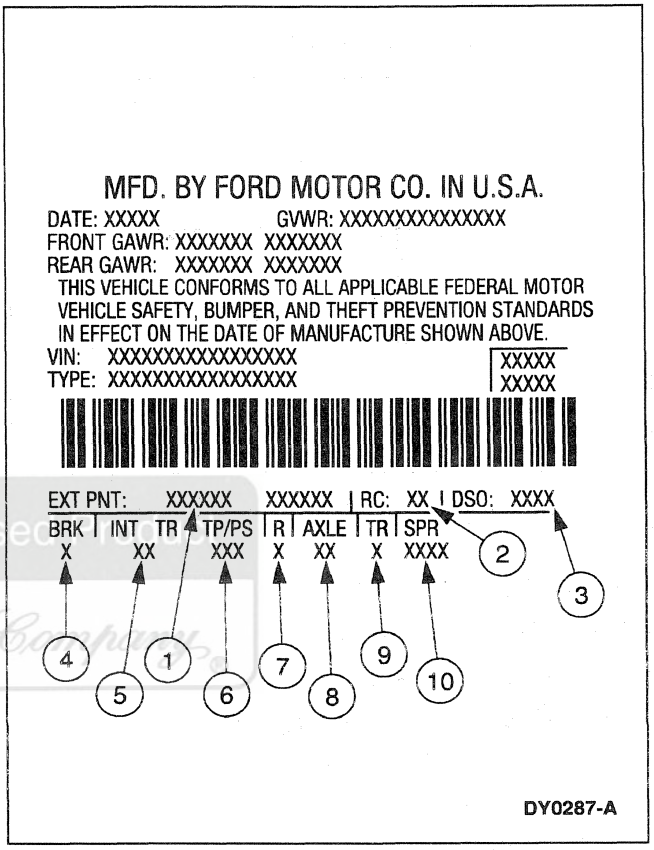

Item	Description
1	Exterior Paint Color Code
2	Region Code
3	Special Order Code (DSO — Domestic Special Order FSO— Foreign Special Order, PTO — Paint, Tire Option Special Order)
4	Brake Type Code
5	Interior Trim Code
6	Tape/Paint Stripe Code
7	Radio Type Code
8	Axle Ratio Code
9	Transmission Code
10	Spring Code

Official Licensed Product
Ford Motor Company

DESCRIPTION AND OPERATION (Continued)

Vehicle Certification (VC) Label Reference

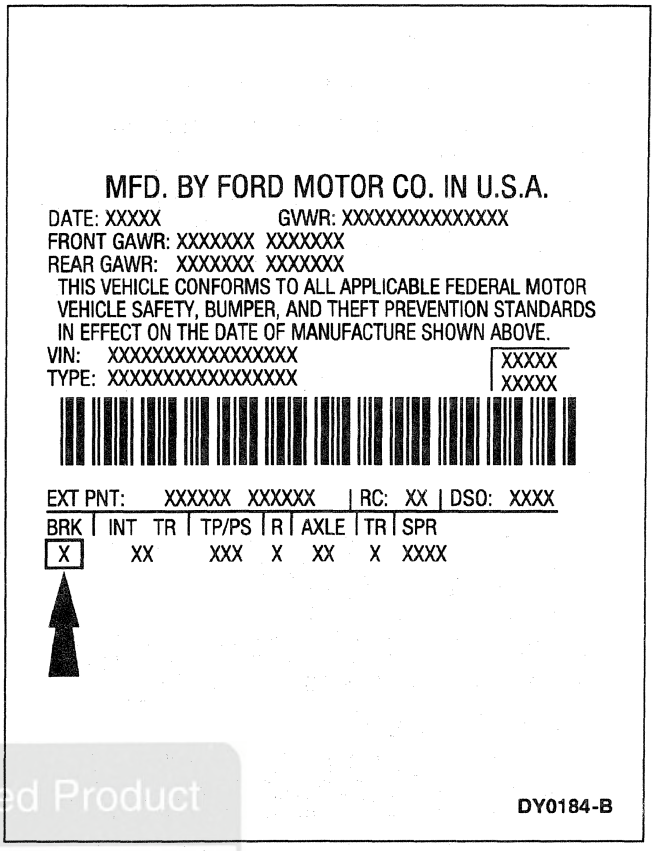

Official Licensed Product
Ford Motor Company

Refer to the paint manufacturer's code book for exterior color information.

DESCRIPTION AND OPERATION (Continued)

The brake type codes are:

- A — Front disc/rear drum (Escort/Tracer)
- B — Anti-lock — with front disc/rear drum (Escort/Tracer)
- C — Anti-lock — with 4-wheel disc (Escort/Tracer)
- 1 — 4-wheel disc (Escort/Tracer)
- 4 — Anti-lock brakes (ABS) with traction control (Continental, Town Car, Mark VIII)

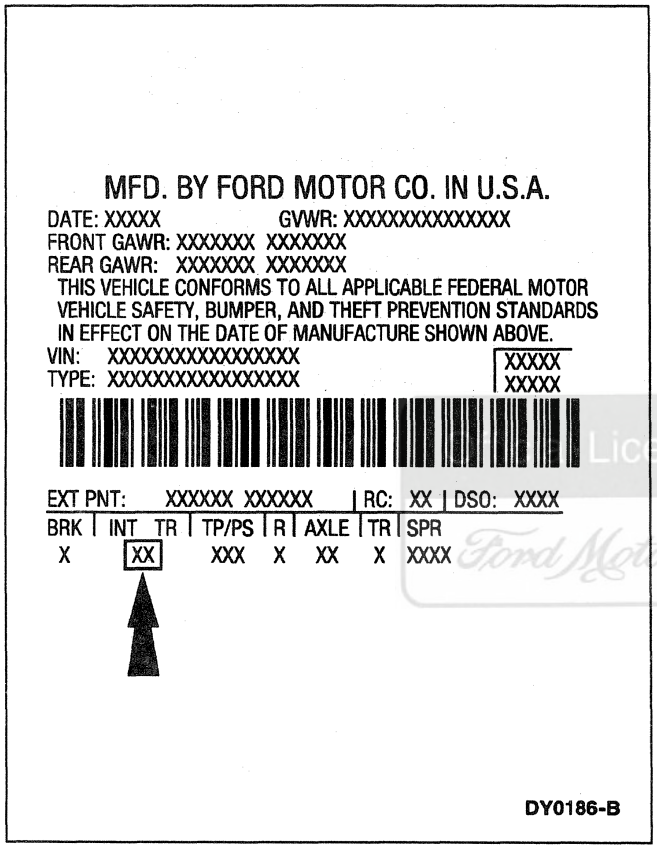

The interior trim codes are listed below. The first letter/number is for the interior fabric. The second letter is for the interior color.

- C — Individual, Summit (Escort)
- D — Individual, Deco (Escort)
- J — Individual, Brook (Escort)
- K — Individual, Deco (Escort, Sport)
- 9 — Individual, Brook (Escort)
- A — Individual, Nautilus (Tracer)
- C — Individual, Summit (Tracer)
- P — Bench, Wellington Body Cloth (Town Car)
- R — Bench, Leather "G" Grain (Town Car, optional with Executive Series)
- S — Bench, Leather "G" Grain (Town Car, standard with Signature Series)
- Q — Bench, Nudo Leather (Town Car, standard with Cartier Series)
- X — Leather "G" Grain (Town Car standard with LTS Version)
- 6 — Individual, Super Soft Leather (Continental)
- 7 — Split Bench, Super Soft Leather (Continental)
- Z — Individual, Nudo Leather (Mark VIII)
- D — Individual, Nudo Leather with Euro-perforated trim (Mark VIII LSC)

The interior trim colors are:

- A — Medium Graphite (Escort/Tracer)
- C — Willow Green (Escort/Tracer)
- D — Denim Blue (Escort/Tracer)
- E — Medium Prairie Tan (Escort/Tracer)
- D — Medium Dark Denim (Town Car)
- X — Oxford White/Light Graphite (Town Car)
- 9 — Ivory/Light Graphite (Town Car)
- Y — Prairie Tan (Town Car, Mark VIII)
- 2 — Light Graphite (Town Car, Continental, Mark VIII)
- R — Dark Denim (Town Car)
- W — Midnight Black (Town Car, Continental, Mark VIII)

Licensed Product Ford Motor Company

DESCRIPTION AND OPERATION (Continued)

- W — Midnight Black (Town Car, Continental, Mark VIII)
- Q — Ivory (Continental, Mark VIII)
- P — Medium Prairie Tan (Continental)

Tape and paint stripe codes do not apply.

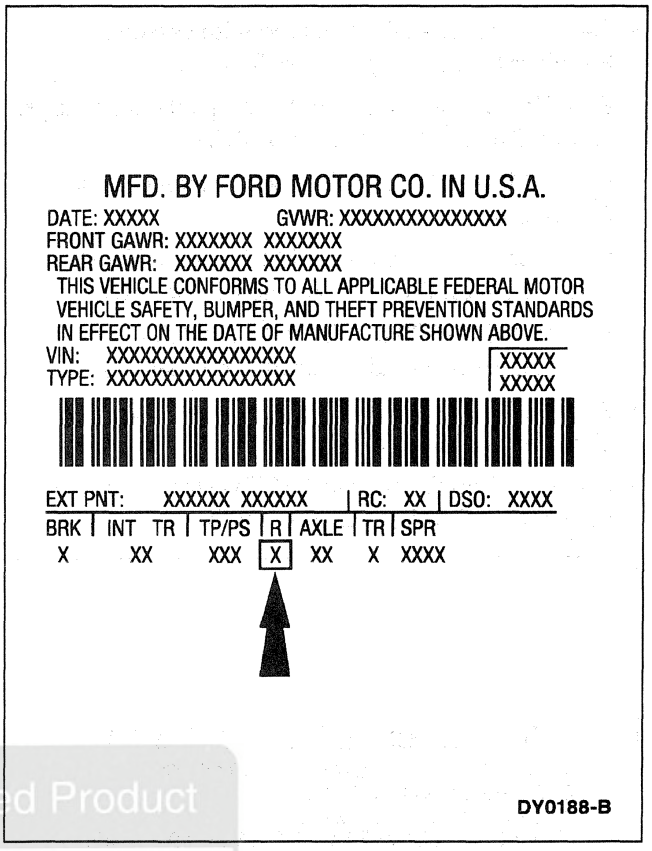

Official Licensed Product
Ford Motor Company

The radio type codes are:

- F — Electronic AM/FM stereo (Escort/Tracer)
- H — Electronic AM/FM stereo with cassette (Escort/Tracer)

DESCRIPTION AND OPERATION (Continued)

- 6 — Electronic AM/FM stereo with cassette, Premium Sound Amp (Escort/Tracer)
- R — JBL Sound System with compact disk changer (Town Car, Continental, Mark VIII)
- H — "M100" Electronic AM/FM stereo cassette (Town Car)
- 5 — Electronic Premium "M100" AM/FM stereo disc radio with Premium Sound (Mark VIII)
- L — Premium 100 mm DSP "LUX" AM/FM stereo cassette, Electronically Tuned (Continental)
- 9 — Audio disk player/changer (Town Car, Continental, Mark VIII)
- 6 — Premium Electronic AM/FM stereo cassette (Town Car, Continental, Mark VIII)

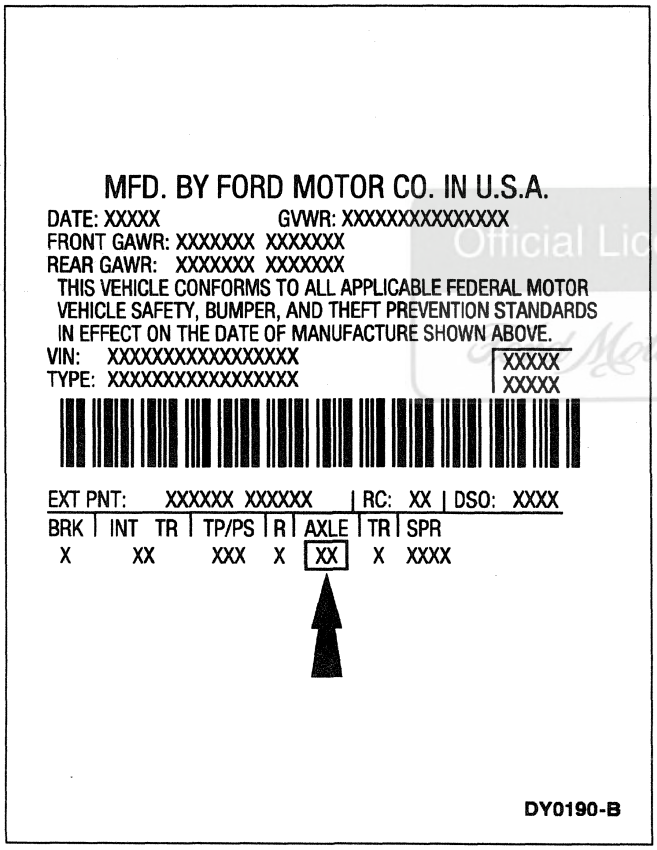

The axle ratios are:

- 3K — 3.74 (Escort/Tracer)
- 4T — 4.10 (Escort/Tracer)
- 3D — 3.85 (Escort/Tracer)
- JY —3.08 conventional (Town Car)
- 25 — 3.55 conventional (Town Car)
- 9E — 3.27 locker (Town Car)
- MY — 3.08 conventional (Town Car)
- A7 — 3.07 conventional (Mark VIII)
- 34 —3.27 conventional (Mark VIII)
- 15 — 3.56 (Continental)

The transmission/transaxle codes are:

- E — 4-Speed automatic (Escort/Tracer)
- W — 5-Speed manual (Escort/Tracer)

Official Licensed Ford Motor Company

DESCRIPTION AND OPERATION (Continued)

- U — Automatic overdrive — 4R70W (Town Car, Mark VIII)
- X — Automatic overdrive — AX4N (Continental)

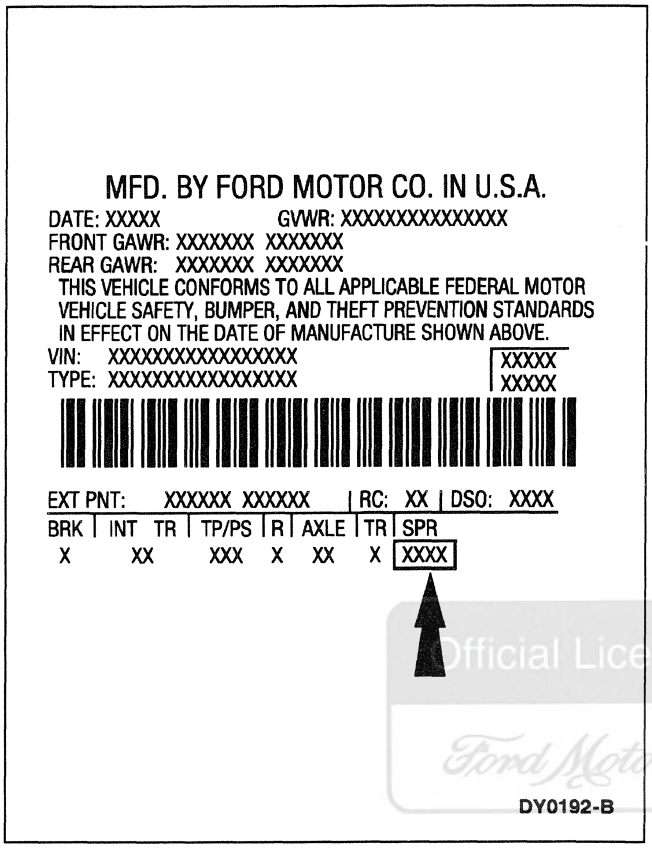

NOTE: Town Car, Mark VIII and Continental use the air suspension system. Rear spring part number identification is not required. In addition, Mark VIII uses the air suspension system, and identification of the front springs is not required.

The spring codes are:

- DOH — 5310 — Front spring (Escort/Tracer)
- PUT — 5310 — Front spring (Escort/Tracer)
- VEM — 5310 — Front spring (Escort/Tracer)
- KIG — 5310 — Front spring (Escort/Tracer)
- BIR — 5310 — Front spring (Escort/Tracer)
- ZIS — 5310 — Front spring (Escort/Tracer)
- FPK — 5310 — Front spring (Town Car)
- SAP — 5310 — Front spring (Town Car)
- RIM — 5310 — Front spring (Town Car)
- BRX — 5310 — Front spring (Town Car, China Flagship)
- AOK — 5310 — Front spring (Town Car, China Flagship)
- QAD — 5560 — Rear spring (Escort/Tracer)
- TAH — 5560 — Rear spring (Escort/Tracer)
- NUC — 5560 — Rear spring (Escort/Tracer)

VC Label — Incomplete Vehicle (Typical)

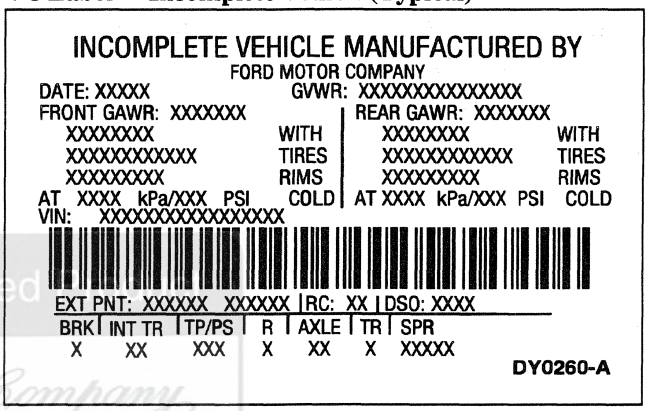

VC Label — Canada (Typical)

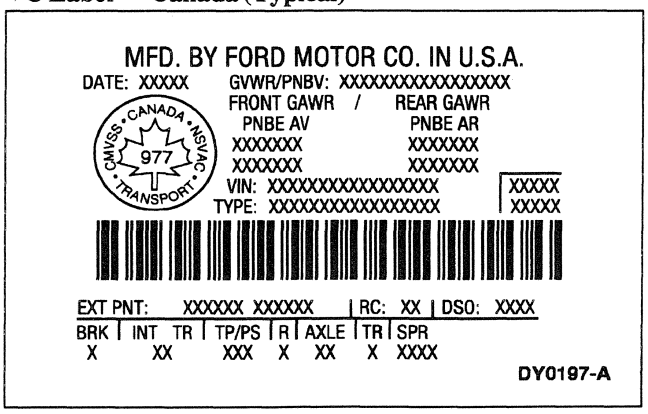

Official Licensed Ford Motor Company

DESCRIPTION AND OPERATION (Continued)

VC Label — Mexico (Typical)

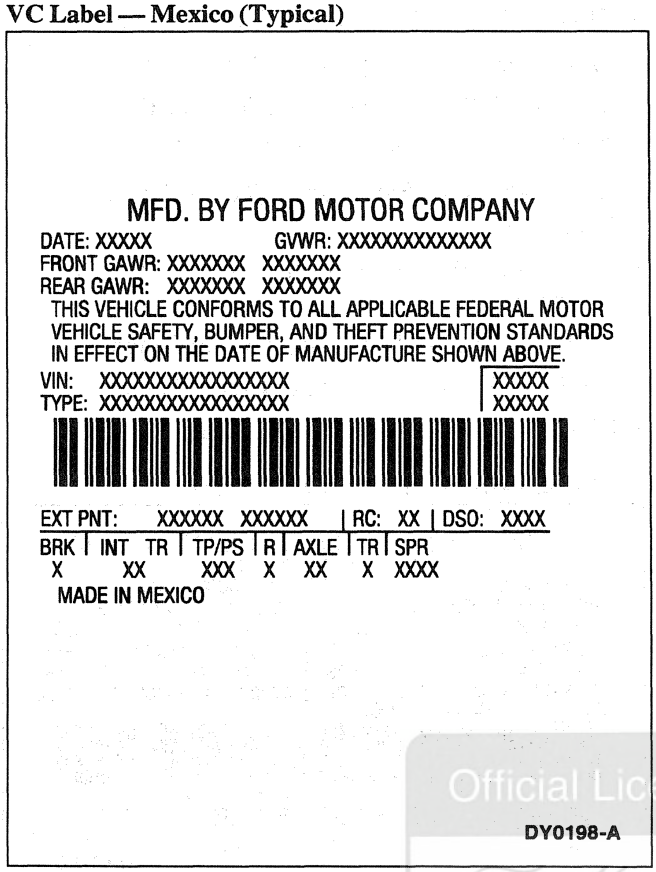

Official Licensed Product
Ford Motor Company

SECTION 100-02 Jacking and Lifting

VEHICLE APPLICATION: Mark VIII

SUBJECT **PAGE**

GENERAL PROCEDURES

Jacking 100-02-2
Lifting 100-02-4

Official Licensed Product
Ford Motor Company

GENERAL PROCEDURES

Jacking

WARNING: ON VEHICLES EQUIPPED WITH AIR SUSPENSION, THE ELECTRICAL POWER SUPPLY TO THE AIR SUSPENSION SYSTEM MUST BE SHUT OFF PRIOR TO HOISTING THE VEHICLE. THIS CAN BE ACCOMPLISHED BY DISCONNECTING THE BATTERY OR TURNING OFF THE AIR SUSPENSION SERVICE SWITCH LOCATED IN THE LUGGAGE COMPARTMENT ON THE LH SIDE. FAILURE TO DO SO MAY RESULT IN UNEXPECTED INFLATION OR DEFLATION OF THE AIR SPRINGS WHICH MAY RESULT IN SHIFTING OF THE VEHICLE DURING THESE OPERATIONS.

WARNING: NEVER RUN THE ENGINE WITH ONE WHEEL OFF THE GROUND, SUCH AS WHEN CHANGING A TIRE. THE WHEEL STILL ON THE GROUND COULD CAUSE THE VEHICLE TO MOVE.

Official Licensed Product
Ford Motor Company

CAUTION: Never use the differential housing as a lift point. Damage to differential housing and cover may occur.

CAUTION: Do not attempt to use jack pressure on either the front bumper (17757) or the rear bumper (17906) of any unitized vehicle. Damage to the bumper covers will occur.

CAUTION: The service jack (17080) provided with the vehicle is only intended to be used in an emergency for changing a deflated tire. To avoid damage to the vehicle, never use the service jack to hoist the vehicle for any other service.

1. Lift the vehicle using the jacking points procedure.

GENERAL PROCEDURES (Continued)

Jacking Points

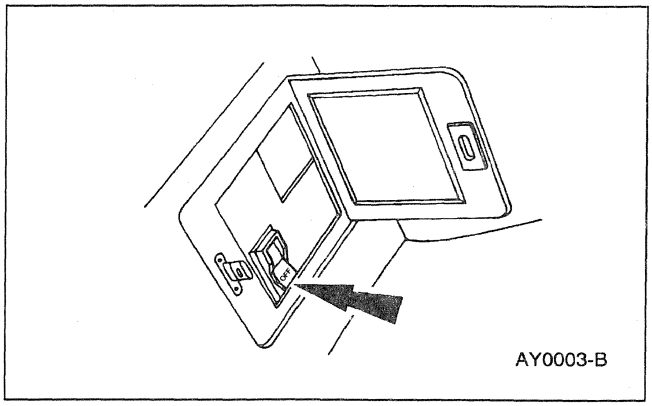
AY0003-B

1. Open the luggage compartment and turn the air suspension service switch off before lifting the vehicle.

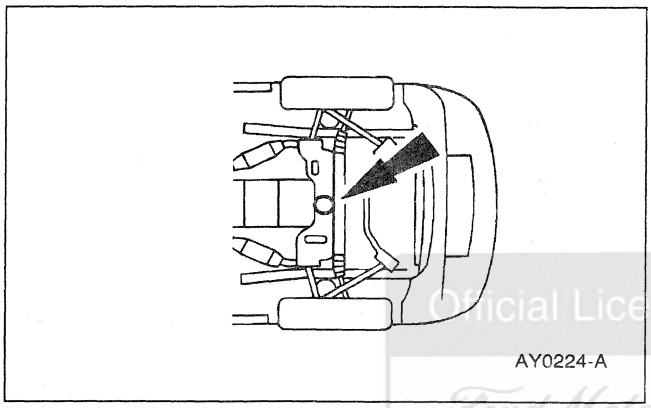
AY0224-A

2. To lift the front of the vehicle, position the floor jack under the front suspension lift point.

Official Licensed Product
Ford Motor Company

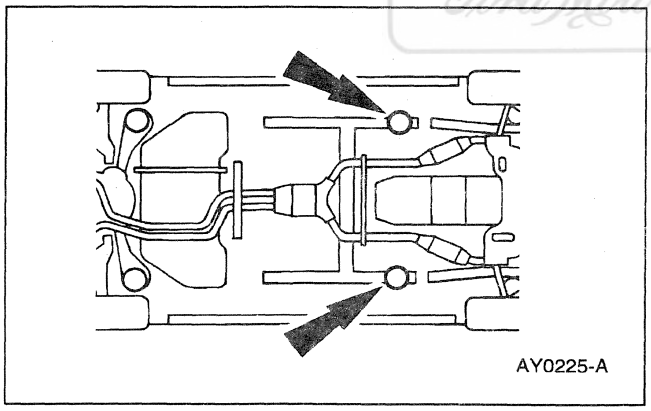
AY0225-A

3. To lift the front, as well as either side of the front end, position the floor jack under the front frame lift points.

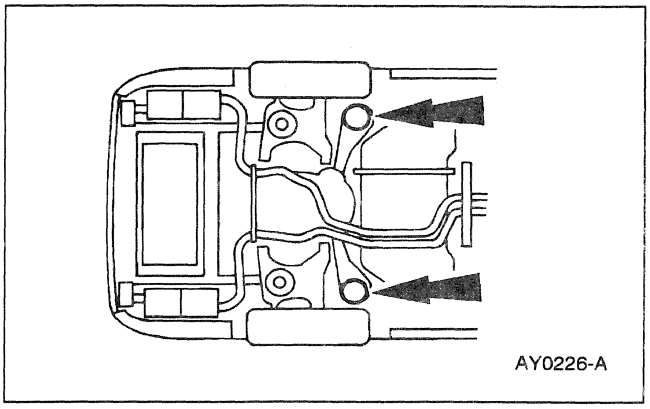
AY0226-A

4. To lift the rear of the vehicle, position the floor jack under the rear frame lift points.

GENERAL PROCEDURES (Continued)

Lifting

⚠ WARNING: ON VEHICLES EQUIPPED WITH AIR SUSPENSION, THE ELECTRICAL POWER SUPPLY TO THE AIR SUSPENSION SYSTEM MUST BE SHUT OFF PRIOR TO HOISTING THE VEHICLE. THIS CAN BE ACCOMPLISHED BY DISCONNECTING THE BATTERY OR TURNING OFF THE AIR SUSPENSION SERVICE SWITCH LOCATED IN THE LUGGAGE COMPARTMENT ON THE LH SIDE. FAILURE TO DO SO MAY RESULT IN UNEXPECTED INFLATION OR DEFLATION OF THE AIR SPRINGS WHICH MAY RESULT IN SHIFTING OF THE VEHICLE DURING THESE OPERATIONS.

⚠ CAUTION: Do not allow the hoist adapters to contact the rear halfshafts, constant velocity (CV) joints, steering linkage, stabilizer bar, rear subframe stabilizer brackets or to compress the lower suspension arm stabilizer bar insulator (5493). Damage to suspension, exhaust and/or steering linkage components may occur if care is not exercised when positioning the hoist adapters of two-post hoists prior to lifting the vehicle.

⚠ CAUTION: Never use the differential housing as a lift point. Damage to differential housing and cover may occur.

⚠ CAUTION: Do not attempt to use jack pressure on either the front bumper or the rear bumper of any unitized vehicle. Damage to bumper covers will occur.

1. Lift vehicle using the applicable lifting point procedure.

Lifting Points—General

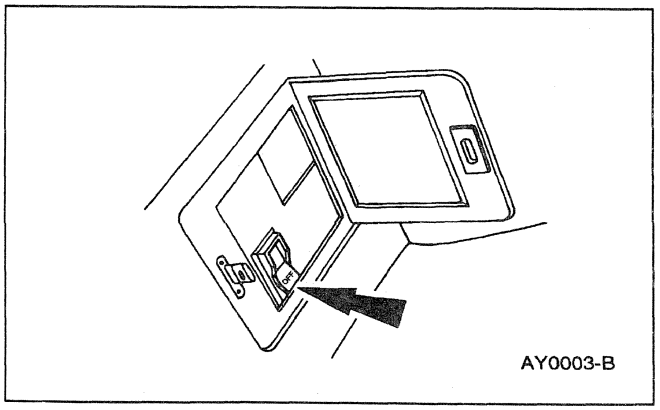

1. Open the luggage compartment and turn the air suspension service switch off before lifting the vehicle.

GENERAL PROCEDURES (Continued)

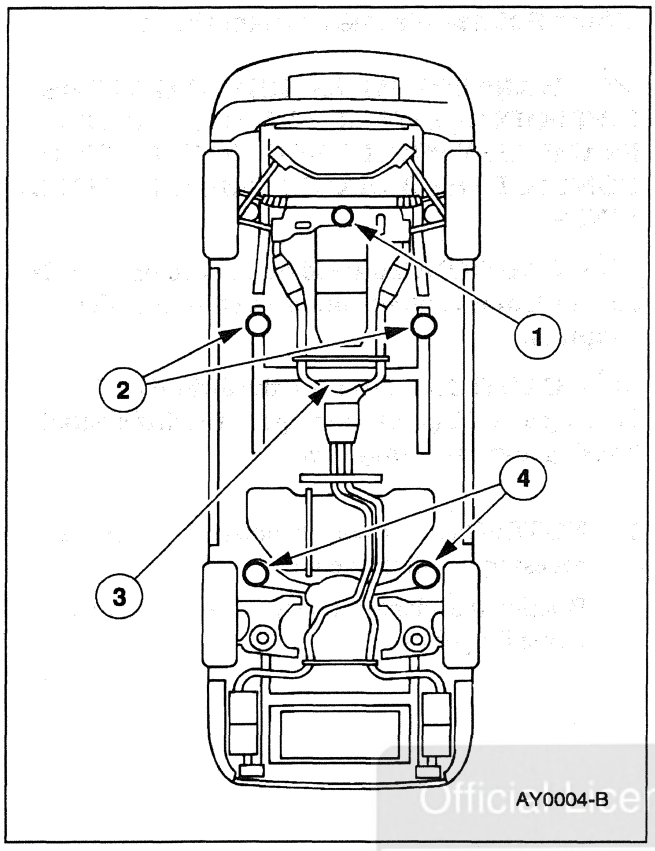

2. Lift the vehicle using lift points as applicable.
   1 Front suspension lift point.
   2 Front frame lift points.
   3 No. 3 crossmember.
   4 Rear frame lift points.

Official Licensed Product
Ford Motor Company

Lifting Points—Drive-On Hoist

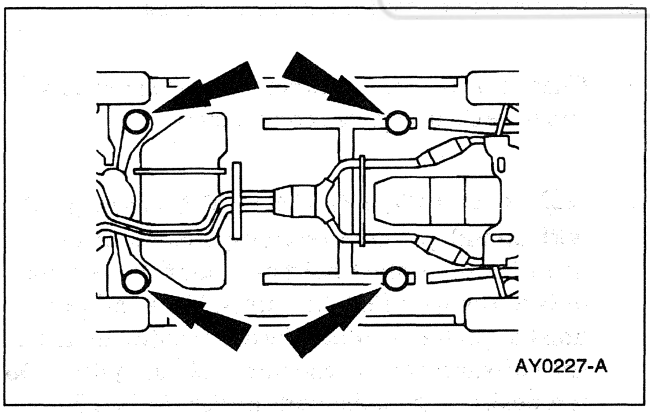

1. **CAUTION: To prevent possible damage to the underbody, do not drive the vehicle onto the drive-on hoist without first checking for possible interference.**

   Check for interference between the upright flanges of the hoist rails and the underbody.

2. If interference exists, modify hoist flanges or build up the approach ramps as necessary to provide clearance.

GENERAL PROCEDURES (Continued)

Lifting Points—Frame Contact Hoist

WARNING: WHEN HOISTING AT THE LIFT POINTS, ESPECIALLY THE FRONT FRAME LIFT POINTS, BE CAREFUL NOT TO CONTACT THE BRAKE LINES OR THE FUEL LINES.

CAUTION: To avoid damage to the vehicle, all four frame contact points must contact the adapters.

CAUTION: Never use the differential housing as a lift point. Damage to the differential housing and cover may occur.

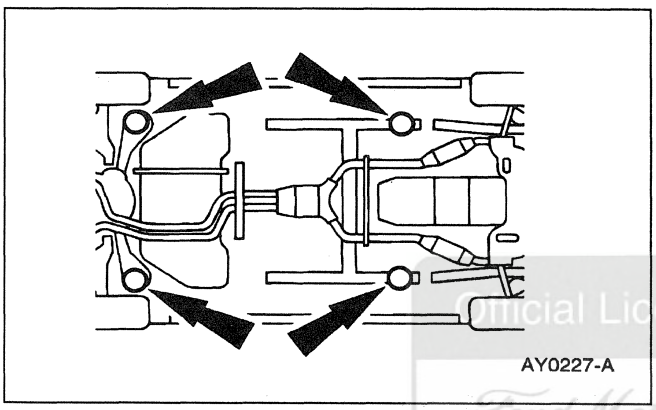

1. **NOTE:** On frame contact hoists, adapters are necessary to lift the vehicle.

   Position the adapters under the front and rear frame lift points.

Official Licensed Product
Ford Motor Company

2. Center the adapters on the contact areas.

3. Check for sufficient clearance between the hoist and the exhaust system components.

4. **CAUTION: The Mark VIII is equipped with an independent rear suspension. Always use a frame contact hoist and hoist the vehicle only at the specified lift points. Never allow a hoist or jack to contact the differential housing, the halfshafts or the constant velocity joints. Do not position the hoist pads under the No. 3 crossmember. Damage to the vehicle could result.**

   Use the special hoist adapters if recommended by the specific hoist manufacturer.

Lifting Points—Twin-Post Hoist

1. Never use a twin-post hoist on a rear wheel drive vehicle with independent rear suspension such as the Mark VIII.

SECTION 100-04 Noise, Vibration and Harshness

VEHICLE APPLICATION: Mark VIII

SUBJECT **PAGE**

DESCRIPTION AND OPERATION
- Noise, Vibration and Harshness (NVH) 100-04-2
  - Definitions 100-04-2
  - Diagnostic Theory 100-04-2
  - Glossary of Terms 100-04-2
  - Normal Noise, Vibration and Harshness 100-04-2

DIAGNOSIS AND TESTING
- Noise, Vibration and Harshness (NVH) 100-04-5
  - Diagnostic Procedure 100-04-5
    - Accessories Mounting Inspection 100-04-13
    - Axle Inspection 100-04-13
    - Drive Belt Inspection 100-04-13
    - Driveshaft Inspection 100-04-13
    - Driveshaft U-Joint Inspection 100-04-13
    - Exhaust System Inspection 100-04-14
    - Halfshaft Inspection 100-04-14
    - Hoist Test 100-04-12
    - Noise Diagnostic Procedure 100-04-8
    - Road Test 100-04-9
    - Tire/Wheel Inspection 100-04-14
  - Inspection and Verification 100-04-5
    - How to Use the Diagnostic Procedure 100-04-5
  - Pinpoint Tests 100-04-16
  - Symptom Chart 100-04-14

GENERAL PROCEDURES
- Engine/Transmission Mount Neutralizing 100-04-27
- Exhaust System Neutralizing 100-04-28

Official Licensed Product
Ford Motor Company

DESCRIPTION AND OPERATION

Noise, Vibration and Harshness (NVH)

Definitions

Noise is any unwanted sound, usually unpleasant in nature. Possible sources of noise are:

- the engine.
- the engine accessories.
- the intake and exhaust systems.
- the driveline.
- electric motors and pumps.
- the wind.
- mechanical pumps.
- the road surface (components reacting to road surface-induced forces).

Vibration is an unwanted periodic motion of a body or medium. It may be felt, heard, or seen. Possible sources of vibration include the:

- tires.
- engine.
- engine accessories.
- suspension.
- driveline.
- exhaust system.
- road irregularities (wave pattern, corrugated).
- rigid body motion (bounce, pitch, yaw).

Harshness refers to the ride quality and is very subjective. Reference to the previous conditions is usually the only way to identify harshness as a symptom.

Normal Noise, Vibration and Harshness

All internal combustion engines and drivelines produce some noise and vibration; operating in a real world environment adds noise and vibration that are not subject to control. Vibration isolators, mufflers and dampers are used to reduce these to acceptable levels.

A driver who is unfamiliar with a vehicle may think that some sounds are abnormal when actually the sounds are normal for the vehicle type.

As a technician, it is very important to be familiar with vehicle features and know how they relate to NVH concerns and their diagnosis. If, for example, the vehicle has automatic overdrive, it is important to test drive in and out of overdrive mode.

Diagnostic Theory

The shortest route to an accurate diagnosis results from:

- system knowledge, including comparison with a known good system.
- system history, including repair history and usage patterns.
- condition history, especially any relationship to repairs or sudden change.
- knowledge of probable causes.
- using a systematic diagnostic method that divides the system into related areas.

The diagnosis and correction of noise, vibration and harshness concerns requires:

- a road test to determine the exact nature of the concern.
- an analysis of the possible causes.
- testing to verify the cause.
- repairing any concerns found.
- a road test to make sure the concern has been corrected or brought back to within a normal range.

Official Licensed Product
Ford Motor Company

Glossary of Terms

Acceleration
The act or process of increasing speed. Acceleration occurs at light, medium, or wide-open throttle (WOT) conditions.

Light Acceleration
An increase in speed at less than half throttle.

Medium Acceleration
An increase in speed at half to nearly full throttle.

WOT Acceleration
An increase in speed at wide-open throttle.

Ambient Temperature
The surrounding or prevailing temperature.

Articulation
The relative movement of attached components.

Belt Chirp
A high-pitched short-duration noise usually caused by belt misalignment.

Belt Squeal
A high-pitched long-duration noise usually caused by belt slippage.

DESCRIPTION AND OPERATION (Continued)

Boom
A low frequency (sometimes cycling) noise, often felt as well as heard.

Bound Up
A stressed isolation mount or component that transmits vibration instead of dampening or isolating it.

Brakes Applied
The use of the brakes to keep the vehicle from moving.

Camber
The angle of the wheel in relation to the true vertical as measured looking from the front of the vehicle. Camber is positive when the wheel angle is offset so that the top of the wheel is positioned away from the vehicle.

Caster
The angle of the steering knuckle in relation to the true vertical as measured looking from the side of the vehicle.

Chuckle
The noise that occurs during the coast driving phase, usually caused by excessive clearance due to differential gear wear or by a damaged tooth on the coast side of the final drive ring gear.

Clunk
A short-duration, dull sound usually associated with the transmission engaging in reverse or drive.

Coast/Deceleration
The vehicle is in motion and the transmission is engaged, but no pressure is applied to the accelerator pedal. Speed control, if equipped, is disengaged.

Coast/Neutral Coast
The vehicle is in motion with the transmission disengaged.

Controlled Rear Suspension Height
The height that a designated vehicle element must be at when driveline angle measurements are made.

CPS
Cycles per second.

Cruise
Constant speed on level ground; neither accelerating nor decelerating.

Deceleration
Slowing of the vehicle by releasing the accelerator pedal, but without using the brakes.

Drive Engine Run-Up Test
The operation of the engine through the normal rpm range with the vehicle standing still and the transmission engaged. This test is used for vibration checks.

Driveline Angles
The differences of alignment between the transmission output shaft, the driveshaft (4602) , and the rear axle pinion centerline.

Driveshaft
The shaft that transmits power to the axle input shaft (pinion shaft).

Drivetrain
All power transmitting components from the engine to the wheels; includes the torque converter, the transmission, the driveline, and the drive axle.

Drivetrain Damper
A weight attached to the engine, the transmission or the axle. It is tuned by weight and placement to absorb vibration.

Dynamic Balance
The equal distribution of weight on each side of the centerline, so that when the wheel and tire assembly spins there is no tendency for the assembly to move from side to side (wobble). Dynamically unbalanced wheel and tire assemblies can cause wheel shimmy. Refer to Section 204-04 for the appropriate balancing procedures.

Engine Imbalance
An exaggerated engine movement or vibration that directly increases in frequency as the engine speed increases.

Engine Shake
A condition in which an engine's mass center is not concentric to the rotation center.

Engine Misfire
When ignition in one or more cylinders does not occur or occurs at the wrong time.

Float
A drive mode on the dividing line between cruise and coast where the throttle setting matches the engine speed with the road speed.

Official Licensed Product

DESCRIPTION AND OPERATION (Continued)

Gravelly Feel
A grinding or growl in a component, similar to the feel experienced when driving on gravel.

Harshness
A firmer-than-usual response of a component.

Hose Clamp
A screw-type circular clamp.

Hz
Hertz; a frequency of one cycle per second.

Imbalance
Out of balance; heavier on one side than the other. In a rotating component, imbalance often causes vibration.

Inboard
Toward the vehicle centerline.

Isolate
To separate from the influence of other components.

Knock
The noise caused by gear tooth damage on the drive side of the final drive ring gear, and also by the relative motion of components that are supported by bearings.

Neutral Engine Run-Up Test
The operation of the engine through the normal rpm range with the vehicle standing still and the transmission disengaged. This test is used to identify engine related vibrations.

Neutralize/Normalize
To relieve stress from possible bound-up components.

NVH
Noise, vibration and harshness.

Outboard
Away from the centerline of the vehicle.

Pinion Shaft
The input shaft in a driving axle that is usually a part of the smaller driving or input hypoid gear of a ring and pinion gearset.

Pumping Feel
A slow pulsing movement.

Radial/Lateral
Radial is in the plane of rotation; lateral is at 90 degrees to the plane of rotation.

Ring Gear
The large, circular, driven gear in a ring and pinion gearset.

Road Test
The operation of the vehicle under conditions intended to produce the concern under investigation.

Runout
Out of round or wobble.

Shake
Low frequency vibration, usually with visible movement.

Slip Yoke/Slip Spline
The driveshaft coupling that allows length changes to occur while the suspension articulates and while the driveshaft rotates.

Static Balance
The equal distribution of weight around the wheel. Statically unbalanced wheel and tire assemblies can cause a bouncing action called wheel tramp. This condition will eventually cause uneven tire wear. Refer to Section 204-04 for the appropriate balancing procedures.

Tip-In Moan
A light moaning noise heard during light vehicle acceleration, usually between 40-100 km/h (25-65 mph).

TIR
Total indicated runout.

Tire Deflection
The change in tire diameter in the area where the tire contacts the ground.

Tire Force Vibration
A tire vibration caused by variations in the construction of the tire that is noticeable when the tire rotates against the pavement. This condition may be present on perfectly round tires because of variations in the inner tire construction.

Tire Flat Spots
A condition commonly caused by letting the vehicle stand when the tires are warm. It can be corrected by driving the vehicle until the tires are warm. This concern is more likely to occur with N, V and Z-speed rated tires.

Tire wear caused by wheel-locked skids.

Two-Plane Balance
Radial and lateral balance.

Vibration
An unwanted periodic motion of a body or medium. It can be felt, heard or seen.

Official Licensed Product

DIAGNOSIS AND TESTING

Noise, Vibration and Harshness (NVH)

Special Tool(s)

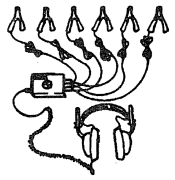 ST2048-A	Chassis EAR 107-R2102 or Equivalent

Inspection and Verification

This section provides a working knowledge of the process of diagnosing noise, vibration and harshness (NVH) conditions. The topics are based on the description of the condition. For example, if the condition is a shake that occurs at high speed, the most likely place to start is under High-Speed Shake in the symptom chart. The road test procedure will help you to sort the conditions into categories and distinguish a vibration from a shake. It also provides quick checks to help pinpoint or eliminate a cause.

How to Use the Diagnostic Procedure

Begin with the customer interview. Use the Glossary of Terms to find the descriptive name of conditions not encountered before. After naming it, identify the condition by performing a road test. Then, locate the proper diagnosis. Remember, by beginning at that point, most other systems in the vehicle have been eliminated; when the proper method of diagnosis is identified, the job is partly done. Follow the steps within the diagnostic procedure. Quick checks are described within the steps, while more involved procedures and adjustments are found in the General Procedures portion of this section. Always follow each step exactly and make notes along the way to recall important findings later.

Diagnostic Procedure

1: Customer Interview

It is important to interview the customer. Customer feedback can supply information that could be helpful in diagnosing the concern. Ask questions like:

- When is the concern present (at idle or while driving)?
- Where does the concern appear to be coming from?
- How long has the concern been there? Has it steadily become worse?
- When did the concern start?
- Does the concern change with engine speed or with vehicle speed?

Use the customer concern evaluation form, shown following the last step of this procedure, to record customer concerns.

2: Duplicate the Noise Concern

Is the noise heard while bouncing the bumper of the vehicle, driving over rough road surfaces, braking, when driving, or while parked?

Typically, front underbody noise is heard while doing the static bounce test (bouncing the bumper or the vehicle). If the noise can not be duplicated with the static bounce test, or during low speed turning maneuvers, it is most likely not suspension related.

3: Isolate the Noise Concern

If the noise can be duplicated by the static bounce test, one of the following methods will help to locate the problem while doing the static bounce test.

- Use a stethoscope or Chassis Ears to determine the area of the chassis that the noise appears to be coming from.
- Place your hand on the coil spring, radius arm, or stabilizer bar. This method is sometimes misleading as the vibrations may carry from one suspension component to another.

4: Inspecting the Vehicle

While inspecting the vehicle in the general area of the source of the noise, look for the following:

- loose fasteners
- worn/broken parts
- excessive dirt/rust accumulation
- signs of leaking fluid
- debris wrapped around the driveshaft or halfshaft

5: Repair of the Vehicle

Use the symptom chart to find which pinpoint test, actions or other section(s) to refer to. Also, check TSBs, OASIS/Hotline for recent techniques or known related systems concerns.

6: Test Drive the Vehicle

Repeat the method used to duplicate the problem to verify that the noise has been repaired.

Official Licensed Ford Dealer Content

DIAGNOSIS AND TESTING (Continued)

7: Follow Up with the Customer

Follow up with the customer about two weeks after the repair is performed to ensure that the noise was correctly identified and repaired.

Official Licensed Product
Ford Motor Company

DIAGNOSIS AND TESTING (Continued)

Customer Concern Evaluation Form

CUSTOMER CONCERN EVALUATION

Initial Write-Up Questions:

1. Did this condition exist when the vehicle was new?
   - Yes ❑
   - No ❑

2. How did the condition begin?
   - Explain: _____

3. Is the problem heard, felt, or both?
   - Heard ❑
   - Felt ❑
   - Both ❑

4. On what type of road surface can the problem be demonstrated?
   - Concrete ❑
   - Gravel ❑
   - Black Top ❑
   - Other _____

5. Is the problem temperature-dependent?
   - Hot ❑
   - Cold ❑
   - Both Hot and Cold ❑

Official Licensed Product
Ford Motor Company

6. Define the type of noise heard.
   - Boom ❑
   - Buzz ❑
   - Click ❑
   - Clunk ❑
   - Gear ❑
   - Grind ❑
   - Hum ❑
   - Knock ❑
   - Moan ❑
   - Pop ❑
   - Rumble ❑
   - Scrape ❑
   - Snap ❑

7. If the problem noise is boom, is it seat-dependent?
   - Yes ❑
   - No ❑

8. If the problem is vibration, where is it felt?
   - Seat ❑
   - Steering Wheel ❑
   - Instrument Panel ❑
   - Floor ❑
   - Accelerator Pedal ❑
   - Hood/Fenders ❑
   - Rearview Mirror ❑

DF0394-B

DIAGNOSIS AND TESTING (Continued)

Noise Diagnostic Procedure

Non-Axle Noise

There are some components, that when subject to certain conditions, can produce noise similar to axle noise and must be considered while performing a road test diagnosis. The seven most common are noise from the transmission, the exhaust system, the tires, roof racks, the power steering pump, the trim mouldings, and auxiliary fluid coolers.

Be sure that none of these components are the cause of the noise concern before proceeding with an axle teardown and diagnosis.

Noise Conditions

If noise is related to a specific component or system, refer to the appropriate workshop manual section for further diagnosis.

Vibration Conditions

Technically, vibration is a low- to high-frequency excitation, shaking or grounding condition, felt or heard, that is steady or variable in level and occurs during a portion of the total operating speed range. The types of vibrations that can be felt in the vehicle are divided into three groups:

NOTE: Halfshafts are not balanced and do not contribute to rotational vibration disturbances.

- Vibrations of various unbalanced rotating parts of the vehicle.
- Body and frame vibrations excited by powertrain, wind, or road inputs.
- Tip-in moans or resonance vibrations from stressed engine, exhaust system mounts, or driveline flexing modes.

These vehicle vibrations can also be subdivided into those that occur at low speeds and those that are most noticeable at higher speeds. Since the line between lower and higher speed vibrations is not clear, there will be vibrations that overlap the two ranges.

Typical Low-Speed Vibrations (Less Than 72 km/h [45 mph]):

- exhaust vibration
- engine harshness/vibration
- driveline vibration due to improper driveline angles or bad U-joints
- power steering pump vibrations
- drive belt vibrations
- engine cooling fan vibration
- take-off shudder (driveline concerns)
- brake roughness or harshness
- driveline roughness
- excessive wheel runout
- tire flat spots
- driveline slip-yoke or companion flange
- components/material trapped between the body and the frame, the engine and the frame or the engine and the body
- automatic transmission clutch slippage

Typical High-Speed Vibrations (Above 72 km/h [45 mph]):

- axle and companion flange runout
- driveshaft imbalance
- excessive tire-wheel and rotor assembly imbalance
- tire roughness due to high non-uniformity (force variation) or out-of-balance condition
- rear axle pinion gear pitch line runout
- excessive tire and wheel runout
- components/material trapped between the body and the frame, the engine and the frame, or the engine and the body
- worn suspension components
- front end accessory vibrations
- exhaust vibration

Harshness is the term commonly used to describe the ride quality concern of the vehicle. A hard ride or harshness is usually caused by the tires or suspension system, namely:

- components/material trapped between the body and the frame
- overinflated, wrong size, or wrong type of tire installed on the vehicle
- suspension insufficiently lubricated
- worn suspension components
- suspension components installed with preload on the pivot point, the bearings, and the bushings
- vehicles equipped with tires that are not specified by the manufacturer (different brand tires often give different ride qualities to the vehicle)
- bent, bound-up or worn shock absorbers or shock isolators

Official Licensed Product Ford Motor Company

DIAGNOSIS AND TESTING (Continued)

- heavy-duty components installed on the vehicle
- air ride/load leveling suspension inoperative, damaged, deflated or improperly adjusted

Other harshness conditions that effect ride quality are summarized as follows:

- Vehicle bounce — the vertical motion of a vehicle on its suspension system, front, and rear in phase. A low frequency ''float''; an intermediate frequency ''kick.''
- Vehicle pitch — the out-of-phase vertical motion of the front and rear of the vehicle. A flat ride is considered the opposite of a pitch ride.
- Vehicle roll — the side-to-side rotation of the vehicle body about the front and the rear axles.

Road Test

Noise, vibration and harshness (NVH) diagnosis must start with the customer interview and be followed by a road test.

NVH usually occurs in five areas:

- tires
- engine accessories
- suspension
- **NOTE:** A gear-driven unit will produce a certain amount of noise. Some noise audible at certain speeds or under various driving conditions is acceptable. Slight noise is not detrimental and must be considered normal.

  drivetrain
- body and interior trim panels

It is important that an NVH concern be isolated into its specific area as soon as possible. The easiest and quickest way to do this is to perform a road test.

1. Use the Vehicle Road Test Evaluation form shown following the last step of this procedure. Make notes on the backside of the form throughout the diagnostic routine.
2. **NOTE:** Do not make adjustments until a road test and a thorough visual inspection of the vehicle is performed. Do not change the tire pressure or the vehicle load. This may reduce the condition's intensity to a point at which it cannot be identified clearly. It may also inject a new condition into the concern, preventing proper diagnosis.

   Make a visual inspection as part of the preliminary diagnostic routine, writing down anything that does not look right. Note the tire pressures, but do not adjust them yet. Note leaking fluids, loose nuts/bolts, or bright spots where components are rubbing against each other. Check the cargo area for unusual loads.
3. Perform the neutral engine run-up (NERU) test. It identifies engine or exhaust-related vibrations and helps in sorting out vibrations that are found in the road test.
   a. If the vehicle is equipped with a tachometer, it can be used. Otherwise, a tach must be connected.
   b. Locate the vehicle away from other vehicles and walls which may reflect sound differently than a road.
   c. Put the vehicle in N (neutral) or P (park) and do not set the parking brake or press on the service brake since these are not engaged in a road test.
   d. Run the engine rpm up from an idle to approximately 4000 rpm and note any moans, vibrations, noises, etc., and the rpm at which they occur. Sometimes it is possible to ''tune in'' on these conditions by running the rpm up and down to determine a precise rpm at which they occur; in other cases they will fall over a broad range of rpm. This establishes a baseline against which driving vibrations can be measured.

Official Licensed Product
Ford Motor Company

DIAGNOSIS AND TESTING (Continued)

e. If you suspect that the exhaust system is vibrating, hang a ring of keys or something similar from the tailpipe and listen for the rattling of the keys as the engine is run up and down.

f. When conducting the road test, refer to the results of the NERU test to distinguish vibrations and noises caused by the engine from those caused by the transmission, the driveshaft (4602) , or the axle. If a vibration or noise occurs at a particular speed, try operating in another gear at the same speed. This changes the engine rpm and helps to distinguish engine induced vibrations and noises. If it occurs at a particular rpm, use different gears to test at the same rpm at different road speeds.

4. Perform the drive engine run-up (DERU) test.

⚠ WARNING: SET BOTH THE PARKING BRAKE AND SERVICE BRAKE AND MAKE SURE TO PERFORM THE TEST WITH ENOUGH SPACE AHEAD OF THE VEHICLE TO ELIMINATE THE POSSIBILITY OF AN ACCIDENT SHOULD THE VEHICLE UNINTENTIONALLY LURCH FORWARD.

⚠ CAUTION: Do not conduct this test for over 30 seconds, or without periodic driving or shifting to neutral to circulate transmission lubricant; otherwise the transmission will overheat causing severe damage to the automatic transmission.

Place the transmission selector lever in D (drive) and run the engine rpm up and down between an idle and approximately 2000 rpm. Note the nature of any vibrations and noises and when these concerns occur in relation to engine rpm.

5. **NOTE:** The type of road and its surface condition are important factors in the road test. A smooth asphalt road that allows driving over a range of speeds is best. The brushed concrete road surface found on many expressways and the coarse aggregate sometimes found in concrete can mask many vehicle noises and make NVH diagnosis difficult.

   Road test the vehicle and define the condition by reproducing it several times during the road test.

   a. A tachometer must be used.

   b. Note the fuel level. Some vehicles change in their response to various excitations when the fuel level changes.

   c. Try to duplicate the conditions with the customer present, particularly the speed and throttle operation.

   d. Find the speed where the concern is most severe.

   e. Accelerate gently through this speed to a few mph above it and then coast back down a few mph below it and note if the concern changes.

   f. Repeat this procedure, if necessary, to get a feeling for the behavior. Then drive about five mph above the speed, put the transmission in NEUTRAL, and coast down. Note any change in behavior.

   g. Try "floating" the driveline by backing off slightly on the throttle at the speed at which the condition occurs. The idea is to unload the axle gears and the universal joints as much as possible. If the concern does not change in all these modes of operation, the cause may be driveline imbalance since the imbalance is not changed by the throttle position.

6. Perform the road test quick checks as soon as the condition is reproduced. This will identify the proper method of diagnosis. Run through the quick checks more than once to make sure you are getting a usable result.

Ford Licensed Product
Ford Motor Company

DIAGNOSIS AND TESTING (Continued)

Road Test Form

VEHICLE ROAD TEST EVALUATION

Road Test Evaluations:

1. Does the problem occur with engine, driveshaft, or wheel speed?
   - Engine ❑
   - Driveshaft ❑
   - Wheel ❑
2. Is the problem road speed dependent? (Occurs at the same vehicle speed independent of transmission gear).
   - Yes ❑
   - No ❑
3. Is the problem engine speed dependent? (Occurs at the same engine rpm, independent of transmission gear).
   - Yes ❑
   - No ❑
4. If the problem is engine speed dependent, perform a neutral engine runup (NERU), and compare rpm's to road rpm's.
   - Same as NERU ❑
   - Different than NERU ❑
5. Is the problem drive mode dependent? (Occurs in drive, cruise, coast/float).
   - Drive ❑ Speed _____
   - Cruise ❑ Speed _____
   - Coast ❑ Speed _____
   - Float ❑ Speed _____
6. Is the problem acceleration rate dependent? (Light, medium or heavy throttle).
   - Light ❑
   - Medium ❑
   - Heavy ❑
7. Does the problem occur from a stop?
   - Yes ❑
   - No ❑
8. Is the problem transmission gear dependent? (Occurs in overdrive, but not direct drive).
   - Yes ❑
   - No ❑
9. Does the problem occur on turns?
   - Yes ❑
   - No ❑
10. Does the problem only occur when going from reverse to drive or drive to reverse?
    - Yes ❑
    - No ❑

DE1351-B

Ford Motor Company

DIAGNOSIS AND TESTING (Continued)

Road Test Quick Checks

1. 24-80 km/h (15-50 mph): With light acceleration, a moaning noise is heard and possibly a vibration is felt in the floorpan. It is usually worse at a particular engine speed and at a particular throttle setting during acceleration at that speed. It may also produce a moaning sound, depending on what component is causing it.

   Refer to Tip-In Moan in the symptom chart.

2. 40-72 km/h (25-45 mph): With steady to heavy acceleration or deceleration, a rumble-type noise is heard. It is very intense during heavy acceleration or deceleration and very light during cruise or neutral coast. The vibration is hard to duplicate with vehicle supported on a hoist, since the wheels are coasting free.

   Refer to Driveshaft Vibration in the symptom chart.

3. High Speed: With slow acceleration and deceleration or at constant speed, a shake is sometimes noticed in the steering wheel/column, seats, floorpan, trim panels or front end sheet metal. It is a low frequency vibration (around 9-15 cycles per second). It may increase when applying the brakes lightly.

   Refer to High-Speed Shake in the symptom chart.

4. High Speed: A vibration is felt in the floorpan or seats, with no visible shake, but with an accompanying sound or rumble, buzz, hum, drone or booming noise.

   It will exist in all drive modes, but may vary somewhat in acceleration, deceleration, float or coast modes. In some cases, the driveline vibration is eliminated in the float mode.

   Refer to Driveshaft Vibration in the symptom chart.

5. Neutral Engine Run-Up: A vibration is felt whenever the engine reaches a particular rpm either with the vehicle in motion or while the vehicle is sitting still. It can be caused by any component from the fan back to the torque converter (7902) and by anything that turns at engine speed when the vehicle is stopped.

   Refer to Engine Accessory Vibration in the symptom chart.

6. Clicking, Popping or Grinding: Noises may be caused by the following:

   - cut or damaged CV joint boot resulting in inadequate or contaminated lube in the CV joint
   - loose CV joint boot clamp
   - a component contacting the halfshaft assembly

Hoist Test

WARNING: IF ONLY ONE DRIVE WHEEL IS ALLOWED TO ROTATE, THE SPEED MUST BE LIMITED TO A MAXIMUM SPEEDOMETER READING OF 55 KM/H (34 MPH) SINCE THE ACTUAL WHEEL SPEED WILL BE TWICE THAT INDICATED ON THE SPEEDOMETER. EXCEEDING A SPEED OF 55 KM/H (34 MPH) OR ALLOWING THE DRIVE WHEEL TO HANG UNSUPPORTED CAN RESULT IN TIRE DISINTEGRATION/DIFFERENTIAL FAILURE, WHICH CAN CAUSE SERIOUS PERSONAL INJURY/EXTENSIVE VEHICLE DAMAGE.

After a road test, it is sometimes useful to do a similar test on a hoist. (Use an axle hoist, not a frame hoist. An axle hoist will not change the driveline angles. If only a frame hoist is available, axle stands must be used.)

1. **WARNING: THE ELECTRICAL POWER TO THE AIR SUSPENSION SYSTEM MUST BE SHUT OFF PRIOR TO HOISTING, JACKING OR TOWING AN AIR SUSPENSION VEHICLE. THIS CAN BE ACCOMPLISHED BY TURNING OFF THE AIR SUSPENSION SWITCH. FAILURE TO DO SO CAN RESULT IN UNEXPECTED INFLATION OR DEFLATION OF THE AIR SPRINGS, WHICH CAN RESULT IN SHIFTING OF THE VEHICLE DURING THESE OPERATIONS.**

   CAUTION: The suspension must not be allowed to hang free. When the constant velocity (CV) joint is at a high angle, extra vibrations as well as damage to seals and joints can occur. Refer to Section 100-02.

   Elevate the rear wheels slightly. Check to make sure both wheels will turn.

Unlicensed Product Ford Motor Company

DIAGNOSIS AND TESTING (Continued)

2. Start the engine and place the transmission selector lever in DRIVE (D). Explore the speed range of interest using the drive/cruise/float tests; refer to Road Test in this section.
3. A coast down in NEUTRAL must also be conducted. If the vehicle is free of vibration when operating at a steady indicated speed and behaves very differently in DRIVE and coast, an axle concern is likely.

Accessories Mounting Inspection

Inspect the drive belt accessories mounting brackets and hardware for loose fasteners or bad belt alignment; refer to Section 303-05.

Axle Inspection

WARNING: THE ELECTRICAL POWER TO THE AIR SUSPENSION SYSTEM MUST BE SHUT OFF PRIOR TO HOISTING, JACKING OR TOWING AN AIR SUSPENSION VEHICLE. THIS CAN BE ACCOMPLISHED BY TURNING OFF THE AIR SUSPENSION SWITCH. FAILURE TO DO SO CAN RESULT IN UNEXPECTED INFLATION OR DEFLATION OF THE AIR SPRINGS, WHICH CAN RESULT IN SHIFTING OF THE VEHICLE DURING THESE OPERATIONS.

Check for low differential lubricant; refer to Section 205-02 for more information.

Drive Belt Inspection

Inspect the drive belt (8620) and pulleys for wear or damage. The automatic tensioners have belt wear indicator marks. If the indicator mark is not between the MIN and MAX marks, the drive belt is worn or an incorrect drive belt is installed. With the engine idling, check for irregular motion of the drive belt . Refer to Section 303-05 for more information.

Driveshaft Inspection

WARNING: THE ELECTRICAL POWER TO THE AIR SUSPENSION SYSTEM MUST BE SHUT OFF PRIOR TO HOISTING, JACKING OR TOWING AN AIR SUSPENSION VEHICLE. THIS CAN BE ACCOMPLISHED BY TURNING OFF THE AIR SUSPENSION SWITCH. FAILURE TO DO SO CAN RESULT IN UNEXPECTED INFLATION OR DEFLATION OF THE AIR SPRINGS WHICH CAN RESULT IN SHIFTING OF THE VEHICLE DURING THESE OPERATIONS.

Inspect the driveshaft for any undercoating, physical damage and missing balance weights. Check for index marks (yellow paint daub marks) on the rear of the driveshaft and the axle companion flange. The paint daubs must be less than 22-1/2 degrees apart.

Driveshaft U-Joint Inspection

WARNING: THE ELECTRICAL POWER TO THE AIR SUSPENSION SYSTEM MUST BE SHUT OFF PRIOR TO HOISTING, JACKING OR TOWING AN AIR SUSPENSION VEHICLE. THIS CAN BE ACCOMPLISHED BY TURNING OFF THE AIR SUSPENSION SWITCH. FAILURE TO DO SO CAN RESULT IN UNEXPECTED INFLATION OR DEFLATION OF THE AIR SPRINGS WHICH CAN RESULT IN SHIFTING OF THE VEHICLE DURING THESE OPERATIONS.

Place the vehicle on a frame hoist and rotate the driveshaft by hand. Check for rough operation or seized U-joints. Replace the U-joint if it shows signs of seizure, excessive wear, or improper seating; refer to Section 205-01.

Ford Motor Company Licensed for Printing

DIAGNOSIS AND TESTING (Continued)

Halfshaft Inspection

WARNING: THE ELECTRICAL POWER TO THE AIR SUSPENSION SYSTEM MUST BE SHUT OFF PRIOR TO HOISTING, JACKING OR TOWING AN AIR SUSPENSION VEHICLE. THIS CAN BE ACCOMPLISHED BY TURNING OFF THE AIR SUSPENSION SWITCH. FAILURE TO DO SO CAN RESULT IN UNEXPECTED INFLATION OR DEFLATION OF THE AIR SPRINGS WHICH CAN RESULT IN SHIFTING OF THE VEHICLE DURING THESE OPERATIONS.

NOTE: Constant velocity (CV) joints must not be replaced unless disassembly and inspection reveals unusual wear; refer to Section 205-05.

NOTE: While inspecting the boots, watch for indentations (''dimples'') in the boot convolutions. Indentations must be removed.

- Inspect the boots for evidence of cracks, tears, or splits.
- Inspect the underbody for any indication of grease splatter near the boots' outboard and inboard locations. This is an indication of boot/clamp damage.

Exhaust System Inspection

WARNING: THE ELECTRICAL POWER TO THE AIR SUSPENSION SYSTEM MUST BE SHUT OFF PRIOR TO HOISTING, JACKING OR TOWING AN AIR SUSPENSION VEHICLE. THIS CAN BE ACCOMPLISHED BY TURNING OFF THE AIR SUSPENSION SWITCH. FAILURE TO DO SO CAN RESULT IN UNEXPECTED INFLATION OR DEFLATION OF THE AIR SPRINGS WHICH CAN RESULT IN SHIFTING OF THE VEHICLE DURING THESE OPERATIONS.

Raise the vehicle on a hoist and check for broken and loose clamps and brackets. Check for damaged and bent exhaust components and for exhaust components touching the body and the frame; refer to Section 309-00 for more information.

Tire/Wheel Inspection

WARNING: THE ELECTRICAL POWER TO THE AIR SUSPENSION SYSTEM MUST BE SHUT OFF PRIOR TO HOISTING, JACKING OR TOWING AN AIR SUSPENSION VEHICLE. THIS CAN BE ACCOMPLISHED BY TURNING OFF THE AIR SUSPENSION SWITCH. FAILURE TO DO SO CAN RESULT IN UNEXPECTED INFLATION OR DEFLATION OF THE AIR SPRINGS, WHICH CAN RESULT IN SHIFTING OF THE VEHICLE DURING THESE OPERATIONS.

Inspect the tires and the wheels for wear and damage. Check the tires for cupping and flat spots. Verify that the correct tire size and wheel rim are used. If a tire/wheel is damaged, the suspension components can suffer misalignment, abnormal wear/damage that contribute to the tire/wheel damage; refer to Section 204-00 or Section 204-04 for more information.

Symptom Chart

Symptom Chart

Condition	Possible Source	Action
• High-Speed Shake	• Wheel hub face/pilot/bolt circle runout. • Tires/wheels. • Wheel bearings. • Suspension/steering linkage. • Engine. • Transmission. • Brake rotors — imbalance.	• GO to Pinpoint Test A. • INSPECT for damage; REFER to Section 206-00.

DIAGNOSIS AND TESTING (Continued)

Symptom Chart (Continued)

Condition	Possible Source	Action
• Tip-In Moan	• Air cleaner (ACL). • Engine mounts. • Exhaust.	• GO to Pinpoint Test B.
• Idle Boom/Shake/Vibration	• Engine compartment component grounding. • Engine mounts. • Exhaust. • Drive belt and pulleys.	• GO to Pinpoint Test C.
• Engine Accessory Vibration	• Drive belt and pulleys. • Mounting hardware. • Accessories.	• REFER to Section 303-05.
• Driveshaft Vibration	• Driveshaft — runout indexing (axle/transmission), companion flange, U-joints and balance.	• REFER to driveline vibration in Section 205-00.
• Tire/Wheel Runout	• Imbalanced tires. • Damaged tire/wheel.	• GO to Pinpoint Test A.
• Brakes — Vibration/Shudder	• Brake pads. • Front disc brake hub and rotors. • Brake calipers.	• REFER to Section 206-00.
• Axle Noise	• Improper axle lubricant level. • Axle housing damage. • Axle shaft/splines/bearings. • Differential gears/bearings. • Broken ring gear bolts. • Broken gear teeth. • Incorrect clearance between axle gears (ring and pinion). • Pinion gear/bearings.	• REFER to Section 205-02.
• Driveshaft Joint Noise and Vibration	• Worn U-joints/CV joints. • Worn slip yoke. • Worn/damaged driveshaft.	• REFER to Section 205-00.
• Non-Axle Noise	• Grille whistle. • Trim moulding. • Aftermarket add-ons (antennas, visors, bug deflectors, etc.). • Drive belt squeal or chirp. • Tires. • Exhaust. • Transmission. • Speed control system. • Power steering system. • Auxiliary transmission fluid cooler.	• GO to Pinpoint Test E. • REFER to Section 303-05. • REFER to Section 204-04. • REFER to Section 309-00. • REFER to Section 307-01. • REFER to Section 310-03. • REFER to Section 211-00. • REFER to Section 307-02.
• Wheel End Vibration	• Tires/wheels. • Wheel bearing. • Brake rotor imbalance. • Engine or transmission mounts.	• GO to Pinpoint Test D.
• Engine Run-Up Vibration	• Engine, transmission, exhaust. • Engine. • Transmission. • Exhaust.	• PERFORM the NERU and DERU tests; REFER to Road Test in this section. • REFER to Section 303-00. • REFER to Section 307-01. • REFER to Section 309-00.

Office Purposes Only - Product

DIAGNOSIS AND TESTING (Continued)

Symptom Chart (Continued)

Condition	Possible Source	Action
• Clicking, Popping or Grinding	• Inadequate or contaminated lube in the CV joint. • A component contacting the halfshaft assembly. • Wheel bearings. • Brake components. • Suspension components. • Steering components.	• REFER to Section 205-05. • INSPECT and CORRECT as necessary. • REFER to Section 204-01 (front) or Section 204-02 (rear). • REFER to Section 206-00. • REFER to Section 204-00. • REFER to Section 211-00.
• Shudder During Acceleration	• Excessively high CV joint operating angles caused by improper ride height. • CV joint. • Binding, damaged or galled splines on the slip-yoke. • U-joints binding or seized. • Front suspension components.	• REFER to Section 204-00. • REFER to Section 205-05. • CHECK the transmission for proper lubricant. CLEAN and LAP the splines. LUBRICATE the splines with Premium Long-Life Grease XG-1-C or equivalent meeting Ford specification ESA-M1C75-B. • REFER to Section 205-01. • REFER to Section 204-00.
• CV Joint Pullout	• Inboard retaining clip missing or improperly seated. • Frame/body damage. • Rear suspension components.	• REFER to Section 205-05. • INSPECT and REPAIR as necessary. • REFER to Section 204-00.
• Whistle	• Body system.	• REFER to the appropriate section in Group 5.
• Wind Noise or Rattle	• Body system. • Exterior trim/ornamentation. • Interior trim/ornamentation. • Instrument panel. • Door.	• REFER to the appropriate section in Group 5.

Official Ford Product
Ford Motor Company

Pinpoint Tests

These pinpoint tests are designed to take the technician through a step-by-step diagnosis procedure to determine the cause of a condition. It may not always be necessary to follow a chart to its conclusion. Perform only the steps necessary to correct the condition. Then check the operation of the system to make sure the condition has been corrected. It is sometimes necessary to remove various vehicle components to gain access to the component to be tested. Refer to the applicable section for removal and installation of components. After verifying that the condition has been corrected, make sure all components removed have been installed.

DIAGNOSIS AND TESTING (Continued)

PINPOINT TEST A: HIGH-SPEED SHAKE

TEST CONDITIONS	TEST DETAILS/RESULTS/ACTIONS
A1 ROAD TEST FOR SHAKE/VIBRATION	
	1 Accelerate the vehicle to the speed at which the shake/vibration occurred. 2 Record the critical vehicle speed and engine rpm. 3 Place the transmission in neutral and allow the engine to return to idle. • Does the shake/vibration disappear during the neutral coast? → **Yes** PERFORM the neutral engine run-up (NERU) test and the drive engine run-up (DERU) test; REFER to Road Test in this section. → **No** GO to **A2**.
A2 INSPECT THE TIRES AND THE WHEELS	
⚠ WARNING: THE ELECTRICAL POWER TO THE AIR SUSPENSION SYSTEM MUST BE SHUT OFF PRIOR TO HOISTING, JACKING OR TOWING AN AIR SUSPENSION VEHICLE. THIS CAN BE ACCOMPLISHED BY TURNING OFF THE AIR SUSPENSION SWITCH. FAILURE TO DO SO CAN RESULT IN UNEXPECTED INFLATION OR DEFLATION OF THE AIR SPRINGS, WHICH CAN RESULT IN SHIFTING OF THE VEHICLE DURING THESE OPERATIONS.	
2 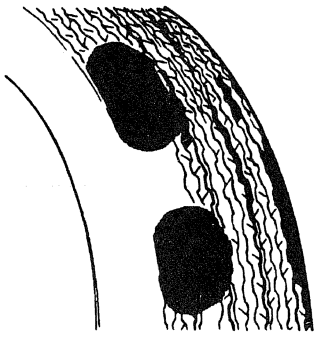 DF0064-A	1 Raise and support the vehicle; refer to Section 100-02. 2 Inspect the tires and the wheels for extreme wear and damage. Inspect the tires for cupping and flat spots. • Is the condition of the tires and the wheels OK? → **Yes** GO to **A3**. → **No** CHECK the suspension components for misalignment, abnormal wear and damage; REFER to Section 204-00. CORRECT the suspension concerns and REPLACE the worn/damaged tires and wheels. PERFORM a road test.

(Continued)

Official Licensed Product

DIAGNOSIS AND TESTING (Continued)

PINPOINT TEST A: HIGH-SPEED SHAKE (Continued)

TEST CONDITIONS	TEST DETAILS/RESULTS/ACTIONS
A3 CHECK THE WHEEL BEARINGS	
	1 Spin the tires by hand to check for wheel bearing roughness. Check wheel bearing end play. • Are the wheel bearings OK? → **Yes** GO to **A4**. → **No** REPLACE the wheel bearings as required; REFER to Section 204-01 (front) or Section 204-02 (rear). PERFORM a road test.
A4 CHECK THE TIRE AND WHEEL BALANCE	
	1 Check the tire and wheel balance. • Are the tires and wheels balanced? → **Yes** GO to **A5**. → **No** BALANCE the tires and wheels; REFER to Section 204-04. PERFORM a road test.
A5 MEASURE RUNOUTS	
1 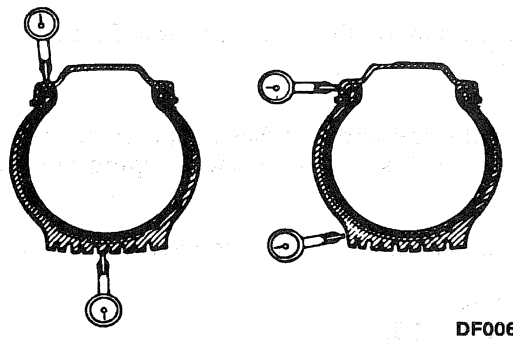 DF0065-A	1 For each wheel position measure, locate and mark: — high point of tire and wheel assembly total radial runout. — high point of wheel radial runout. — high point of wheel lateral runout.

Official Licensed Product
Ford Motor Company

(Continued)

DIAGNOSIS AND TESTING (Continued)

PINPOINT TEST A: HIGH-SPEED SHAKE (Continued)

TEST CONDITIONS	TEST DETAILS/RESULTS/ACTIONS
A5 MEASURE RUNOUTS (Continued)	
	2 Record all measurements in the chart.

Assembly Position	Tire/Wheel Assembly Total Radial Runout	Wheel Radial Runout	Wheel Lateral Runout
Left Front			
Right Front			
Left Rear			
Right Rear			
Example	1.52 mm (0.060 Inch)	0.50 mm (0.020 Inch)	0.63 mm (0.025 Inch)

- Have all the tire and wheel assemblies been measured?

→ **Yes**
GO to **A6**.

→ **No**
COMPLETE Step **A5**.

(Continued)

Official Licensed Product
Ford Motor Company

DIAGNOSIS AND TESTING (Continued)

PINPOINT TEST A: HIGH-SPEED SHAKE (Continued)

TEST CONDITIONS	TEST DETAILS/RESULTS/ACTIONS
A6 ANALYZE THE RUNOUT MEASUREMENTS	

1 Measurements obtained in Step A5 must fall within the specifications listed in Condition 1 in the following chart.

Condition	Assembly Total Radial Runout	Wheel Radial Runout	Wheel Lateral Runout
1	Less Than 1.02 mm (0.04 Inch)	Less Than 1.14 mm (0.045 Inch)	Less Than 1.14 mm (0.045 Inch)
2	Less Than 1.02 mm (0.04 Inch)	More Than 1.14 mm (0.045 Inch)	Less Than 1.14 mm (0.045 Inch)
3	Less Than 1.02 mm (0.04 Inch)	Less Than 1.14 mm (0.045 Inch)	More Than 1.14 mm (0.045 Inch)
4	More Than 1.02 mm (0.04 Inch)	Less Than 1.14 mm (0.045 Inch)	Less Than 1.14 mm (0.045 Inch)

Official Licensed Product
Ford Motor Company

- Do the measurements obtained in A5 fall within the specifications listed in Condition 1 in the chart?

→ **Yes**
Condition 1: Good assembly. GO to **A12**.

→ **No**
Condition 2, 3 or 4: GO to **A7**.

(Continued)

DIAGNOSIS AND TESTING (Continued)

PINPOINT TEST A: HIGH-SPEED SHAKE (Continued)

TEST CONDITIONS	TEST DETAILS/RESULTS/ACTIONS
A7 MEASURE THE WHEEL HUB BOLT, PILOT AND FACE RUNOUT	
	1 Measure the wheel hub bolt, pilot and face runout; refer to Section 205-00. • Is runout within specification? → **Yes** If condition 2 or 3 from A6, GO to **A8**. If condition 4, GO to **A9**. → **No** REPLACE as necessary. CHECK the runout as in A5. If condition 2 or 3 from A6 persists, GO to **A8**. If condition 1, GO to **A12**. If condition 4, GO to **A9**.
A8 REPLACE THE WHEEL	
	1 Measure the runout on the new tire and wheel assembly. • Is the assembly within specification from A6? → **Yes** GO to **A11**. → **No** If condition 2 or 3, REPLACE the wheel and RECHECK. If condition 4, GO to **A9**.
A9 INDEX THE TIRE AND WHEEL ASSEMBLY	
	1 Align the high point of total assembly radial runout 180 degrees away from the high point of the wheel radial runout. 2 Measure the total assembly radial runout. • Is the total radial runout less than 1.02 mm (0.04 inch)? → **Yes** GO to **A11**. → **No** GO to **A10**.

(Continued)

Official Licensed Product
Ford Motor Company

DIAGNOSIS AND TESTING (Continued)

PINPOINT TEST A: HIGH-SPEED SHAKE (Continued)

TEST CONDITIONS	TEST DETAILS/RESULTS/ACTIONS
A10 REPLACE THE TIRE	
	1 Measure the total assembly radial runout on the new tire assembly. • Is the total radial runout less than 1.02 mm (0.04 inch)? → **Yes** GO to **A11**. → **No** INDEX the tire and wheel assembly as in A9. If the new assembly is now within specification, GO to **A11**. If the new assembly is still not within specification, GO to **A12**.
A11 ROAD TEST	
	1 Balance the new tire and wheel assembly. 2 After all assemblies have been checked and corrected, road test the vehicle. • Is the vehicle operating correctly? → **Yes** Vehicle is OK. → **No** GO to **A12**.
A12 SUBSTITUTE WHEELS AND TIRES	
	1 Substitute a known good set of wheels and tires. 2 Road test the vehicle. 3 If the vehicle exhibits a shake or vibration, note the vehicle speed and engine rpm at which it occurs. • Is the vibration present? → **Yes** REFER to driveline vibration in Section 205-00. → **No** INSTALL the original tire and wheel assemblies one by one, road testing at each step until the damaged tire(s) is identified. REPLACE tire(s) as necessary and RETEST.

Official Licensed Product
Ford Motor Company

DIAGNOSIS AND TESTING (Continued)

PINPOINT TEST B: TIP-IN MOAN

TEST CONDITIONS	TEST DETAILS/RESULTS/ACTIONS
B1 CHECK THE ENGINE AIR CLEANER INSTALLATION	
	1 Refer to Section 303-12 for proper installation of the engine air cleaner. • Is the engine air cleaner properly installed? → **Yes** GO to **B2.** → **No** CORRECT the condition and PERFORM a road test. If the moan persists, GO to **B2.**
B2 INSPECT THE ENGINE AND THE TRANSMISSION MOUNTS	
	1 Inspect and replace the engine and the transmission mounts as necessary. Refer to Section 502-02. 2 Neutralize the mounts; refer to Engine/Transmission Mount Neutralizing in this section. 3 Perform a road test. • Is moan eliminated? → **Yes** The vehicle is OK. → **No** GO to **B3.**
B3 INSPECT THE EXHAUST SYSTEM	
⚠ WARNING: EXHAUST GASES CONTAIN CARBON MONOXIDE, WHICH IS HARMFUL TO HEALTH AND POTENTIALLY LETHAL. EXHAUST SYSTEM LEAKS MUST BE REPAIRED IMMEDIATELY. NEVER OPERATE THE ENGINE IN AN ENCLOSED AREA. **⚠ WARNING: EXHAUST SYSTEM COMPONENTS ARE HOT.**	
	1 Inspect and replace the exhaust components as necessary; refer to Section 309-00. 2 Neutralize the exhaust system; refer to Exhaust System Neutralizing in this section.

(Continued)

Official Licensed Product Ford Motor Company

DIAGNOSIS AND TESTING (Continued)

PINPOINT TEST B: TIP-IN MOAN (Continued)

TEST CONDITIONS	TEST DETAILS/RESULTS/ACTIONS
B3 INSPECT THE EXHAUST SYSTEM (Continued)	
	3 Perform a road test. • Is moan eliminated? → **Yes** The vehicle is OK. → **No** REFER to Section 303-05 for diagnosis and testing of the accessory drive system.

PINPOINT TEST C: IDLE BOOM/SHAKE/VIBRATION

TEST CONDITIONS	TEST DETAILS/RESULTS/ACTIONS
C1 CHECK FOR ENGINE COMPARTMENT COMPONENT GROUNDING	
	1 Check the engine compartment for any component that is grounding between the engine and the body or chassis. • Are all components OK? → **Yes** GO to **C2**. → **No** CORRECT the condition and PERFORM a road test. If the boom/shake/vibration is still present, GO to **C2**.
C2 INSPECT THE ENGINE AND THE TRANSMISSION MOUNTS	
	1 Inspect and replace the engine and the transmission mounts as necessary. Refer to Section 502-02. 2 Neutralize the mounts; refer to Engine/Transmission Mount Neutralizing in this section. 3 Perform a road test. • Is the condition corrected? → **Yes** The vehicle is OK. → **No** GO to **C3**.

(Continued)

Official Licensed Product
Ford Motor Company

DIAGNOSIS AND TESTING (Continued)

PINPOINT TEST C: IDLE BOOM/SHAKE/VIBRATION (Continued)

TEST CONDITIONS	TEST DETAILS/RESULTS/ACTIONS
C3 INSPECT THE EXHAUST SYSTEM	
⚠ WARNING: EXHAUST GASES CONTAIN CARBON MONOXIDE, WHICH IS HARMFUL TO HEALTH AND POTENTIALLY LETHAL. EXHAUST SYSTEM LEAKS MUST BE REPAIRED IMMEDIATELY. NEVER OPERATE THE ENGINE IN AN ENCLOSED AREA. **⚠ WARNING: EXHAUST SYSTEM COMPONENTS ARE HOT.** **NOTE:** Disregard this step if it has already been performed in Step B3. Go to Section 303-05 for diagnosis and testing of the accessory drive system.	
	[1] Inspect and replace the exhaust components as necessary; refer to Section 309-00. [2] Neutralize the exhaust system; refer to Exhaust System Neutralizing in this section. [3] Perform a road test. • Is the condition corrected? → **Yes** The vehicle is OK. → **No** REFER to Section 303-05 for diagnosis and testing of the accessory drive system.

Official Licensed Product
Ford Motor Company®

PINPOINT TEST D: WHEEL END VIBRATION ANALYSIS

TEST CONDITIONS	TEST DETAILS/RESULTS/ACTIONS
D1 ROAD TEST FOR VIBRATION/SHUDDER	
	[1] Determine if the vibration/shudder is induced when making a light stop by applying the service brakes. • Is the vibration/shudder present? → **Yes** INSPECT the brake system; REFER to Section 206-00. → **No** GO to **D2**.
D2 PERFORM A NEUTRAL COAST TEST	
[1] 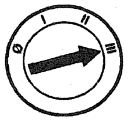 Start the Engine [2] 	[2] Accelerate to the maximum legal speed.

(Continued)

DIAGNOSIS AND TESTING (Continued)

PINPOINT TEST D: WHEEL END VIBRATION ANALYSIS (Continued)

TEST CONDITIONS	TEST DETAILS/RESULTS/ACTIONS
D2 PERFORM A NEUTRAL COAST TEST (Continued)	
3 	3 Allow the engine to return to idle. If the vibration exists with the transmission in NEUTRAL, the source is probably in the wheels, the tires, or the driveline. • Does the vibration disappear during the neutral coast test? → **Yes** PERFORM the neutral engine run-up (NERU) and the drive engine run-up (DERU) tests; REFER to Road Test in this section. → **No** REFER to Section 204-04 for diagnosis and testing of the wheels and tires.

PINPOINT TEST E: NON-AXLE NOISE

TEST CONDITIONS	TEST DETAILS/RESULTS/ACTIONS
E1 INSPECT THE VEHICLE TRIM	
	1 Inspect the grille and trim mouldings to see if they are the source of the noise; refer to Section 501-08. • Are the vehicle trim components causing the noise? → **Yes** REPLACE or REPAIR as necessary; REFER to Section 501-08. → **No** GO to **E2**.
E2 CHECK FOR NON-FACTORY ACCESSORIES	
	1 Check for non-factory accessories as the source of the noise. Example: running boards grounding the body to the frame, antennas, visors, bug deflectors, etc. • Are any accessories the cause of the noise? → **Yes** ADJUST, REPAIR, or REPLACE the accessories/fasteners as required. → **No** GO to **E3**.

Official Licensed Product
Ford Motor Company

(Continued)

DIAGNOSIS AND TESTING (Continued)

PINPOINT TEST E: NON-AXLE NOISE (Continued)

TEST CONDITIONS	TEST DETAILS/RESULTS/ACTIONS
E3 CHECK FOR ENGINE/TRANSMISSION NOISE	
	1 Perform the Road Test in this section. • Is the noise engine speed related? → **Yes** REFER to Section 303-01, or Section 307-01. → **No** GO to the symptom chart.

GENERAL PROCEDURES

Engine/Transmission Mount Neutralizing

WARNING: THE ELECTRICAL POWER TO THE AIR SUSPENSION SYSTEM MUST BE SHUT OFF PRIOR TO HOISTING, JACKING OR TOWING AN AIR SUSPENSION VEHICLE. THIS CAN BE ACCOMPLISHED BY TURNING OFF THE AIR SUSPENSION SWITCH. FAILURE TO DO SO CAN RESULT IN UNEXPECTED INFLATION OR DEFLATION OF THE AIR SPRINGS, WHICH CAN RESULT IN SHIFTING OF THE VEHICLE DURING THESE OPERATIONS.

Official Licensed Product
Ford Motor Company

1. Raise and support the vehicle; refer to Section 100-02.
2. Loosen, but do not remove, the engine and transmission mount fasteners; refer to Section 502-02.
3. Lower the vehicle.
4. Operate the vehicle in forward and reverse.
5. Raise and support the vehicle.
6. Tighten the engine and transmission mount fasteners; refer to Section 502-02.
7. Lower the vehicle.

GENERAL PROCEDURES (Continued)

8. Perform a road test.

Exhaust System Neutralizing

WARNING: EXHAUST GASES CONTAIN CARBON MONOXIDE, WHICH IS HARMFUL TO HEALTH AND POTENTIALLY LETHAL. EXHAUST SYSTEM LEAKS MUST BE REPAIRED IMMEDIATELY. NEVER OPERATE THE ENGINE IN AN ENCLOSED AREA.

WARNING: EXHAUST SYSTEM COMPONENTS ARE HOT.

NOTE: Neutralize the exhaust system to relieve strain on mounts which may be sufficiently bound up to transmit vibration as if grounded.

1. **WARNING: THE ELECTRICAL POWER TO THE AIR SUSPENSION SYSTEM MUST BE SHUT OFF PRIOR TO HOISTING, JACKING OR TOWING AN AIR SUSPENSION VEHICLE. THIS CAN BE ACCOMPLISHED BY TURNING OFF THE AIR SUSPENSION SWITCH. FAILURE TO DO SO CAN RESULT IN UNEXPECTED INFLATION OR DEFLATION OF THE AIR SPRINGS, WHICH CAN RESULT IN SHIFTING OF THE VEHICLE DURING THESE OPERATIONS.**

   CAUTION: Make sure the system is warmed up to normal operating temperature, as thermal expansion can be the cause of a strain problem.

   Raise and support the vehicle; refer to Section 100-02.

2. Loosen all hanger attachments and reposition the hangers until they hang free and straight.

3. Loosen all flange joints.

4. Tighten all the hanger clamps and flanges (tighten the manifold flange joint last); refer to Section 309-00.
   - Verify adequate clearance to prevent grounding at any point in the system.
   - After neutralization, the rubber in the exhaust hangers should show some flexibility when movement is applied to the exhaust system.

Official Licensed Product
Ford Motor Company

GENERAL PROCEDURES (Continued)

5. Lower the vehicle.
6. Perform a road test.

Official Licensed Product
Ford Motor Company

GROUP

CHASSIS 2

SECTION TITLE	PAGE
Suspension System—General Information	204-00-1
Front Suspension	204-01-1
Rear Suspension	204-02-1
Wheel and Tires	204-04-1
Suspension, Computer Controlled	204-05-1
Driveline System —General Information	205-00-1
Driveshaft	205-01-1
Rear Drive Axle/Differential—Ford 8.8 Inch Ring Gear	205-02-1
Rear Drive Halfshafts	205-05-1
Brake System—General Information	206-00-1
Front Disc Brake	206-03-1
Rear Disc Brake	206-04-1
Parking Brake and Actuation	206-05-1
Hydraulic Brake Actuation	206-06-1
Power Brake Actuation	206-07-1
Anti-Lock Control and Anti-Wheelspin Control	206-09-1
Steering—General Information	211-00-1
Power Steering	211-02-1
Steering Column	211-04-1
Steering Column Switches	211-05-1

Official Licensed Product
Ford Motor Company

SECTION 204-00 Suspension System — General Information

VEHICLE APPLICATION: Mark VIII

SUBJECT **PAGE**

DESCRIPTION AND OPERATION

Wheel Alignment Angles 204-00-2
Camber 204-00-2
Caster 204-00-2
Dogtracking 204-00-3
Drift/Pull 204-00-4
Nibble 204-00-4
Poor Returnability/Sticky Steering 204-00-4
Ride Height 204-00-3
Shimmy 204-00-4
Toe 204-00-2
Wander 204-00-4
Wheel Track 204-00-3

DIAGNOSIS AND TESTING

Suspension 204-00-5
Component Tests 204-00-9
Ball Joint Inspection 204-00-9
Shock Absorber Inspection 204-00-10
Wheel Bearing Inspection 204-00-10
Inspection and Verification 204-00-5
Symptom Chart 204-00-6

GENERAL PROCEDURES

Camber and Caster Adjustment — Front 204-00-11
Camber and Caster Adjustment — Rear 204-00-12
Toe Adjustment — Front 204-00-13
Toe Adjustment — Rear 204-00-15

SPECIFICATIONS 204-00-16

Official Licensed Product Ford Motor Company

DESCRIPTION AND OPERATION

Wheel Alignment Angles

The camber and toe is adjustable for both the front and rear suspension systems. The front camber is adjusted by means of eccentric cams on the front suspension lower arm (3079). The rear camber is adjusted by means of eccentric cams on the rear upper arms. The caster is adjusted by use of the front lower arm strut nut. The front toe is adjusted by the use of the front wheel spindle tie rod (3280). The rear toe is adjusted by means of eccentric cams on the rear lower arms.

Camber

Negative and Positive Camber

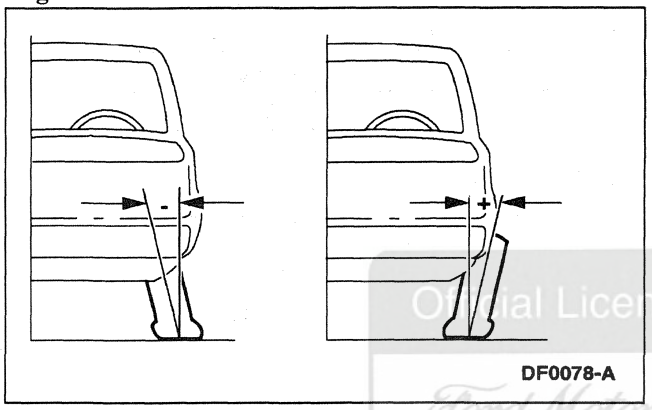

Camber is the vertical tilt of the wheel (1007) when viewed from the front. Camber can be positive or negative and has a direct effect on tire wear.

Caster

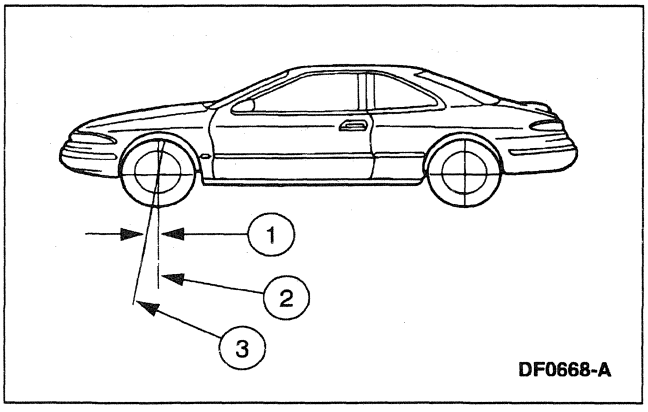

Item	Part Number	Description
1	—	Positive Caster
2	—	True Vertical
3	—	Steering Axis

Caster is the deviation from vertical of an imaginary line drawn through the ball joints when viewed from the side. The caster specifications in this section will give the vehicle the best directional stability characteristics when loaded and driven. The caster setting is not related to tire wear.

Toe

Positive Toe (Toe In)

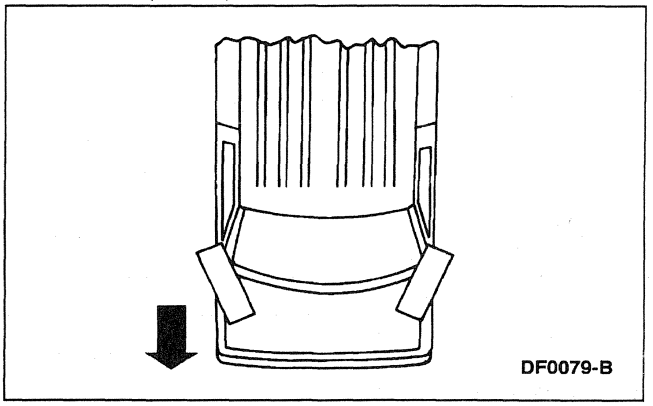

Negative Toe (Toe Out)

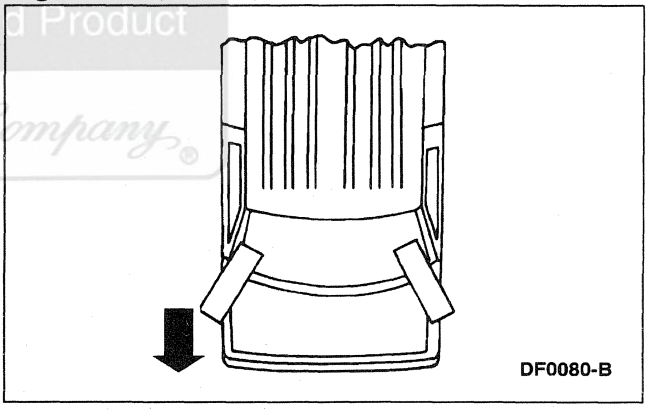

The vehicle toe setting:

- affects tire wear and directional stability.
- must be checked after adding aftermarket equipment, such as a snowplow or body.

Official Licensed Product
Ford Motor Company

DESCRIPTION AND OPERATION (Continued)

Ride Height

Front Ride Height Measurement

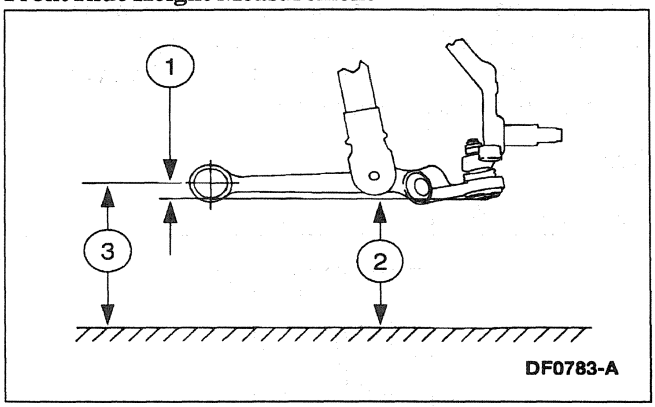

Item	Description
1	Ride Height = B - A
2	Measurement A
3	Measurement B

Rear Ride Height Measurement

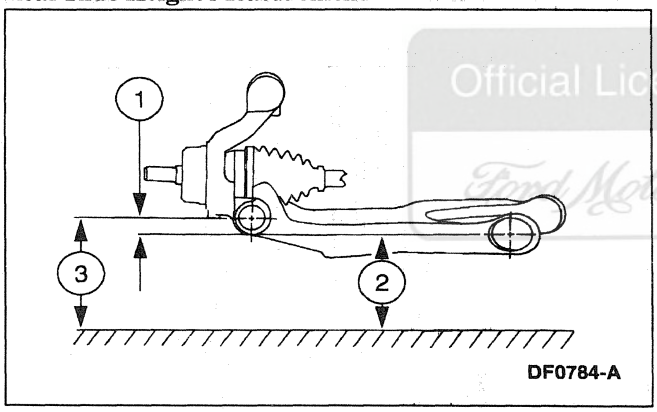

Item	Description
1	Ride Height = A - B
2	Measurement A
3	Measurement B

The vehicle ride height can only be measured accurately after the air suspension auto test has been executed using an NGS tester. Then the air suspension switch must be set in the OFF position to prevent the vehicle ride height from changing.

Wheel Track

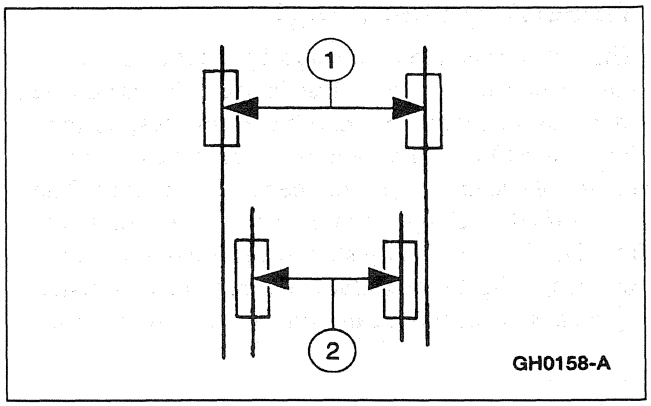

Item	Part Number	Description
1	—	Front Track
2	—	Rear Track

Dogtracking

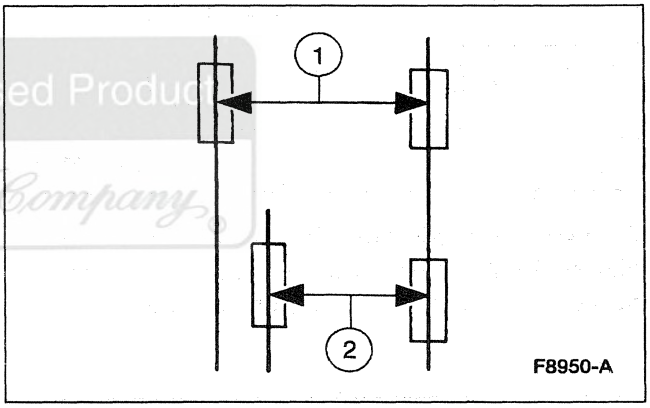

Item	Part Number	Description
1	—	Front Track
2	—	Rear Track Dogtracking

Dogtracking is the condition in which the rear axle is not square to the chassis. Heavily crowned roads can give the illusion of dogtracking.

Official Licensed Product
Ford Motor Company

DESCRIPTION AND OPERATION (Continued)

Wander

Wander is the tendency of the vehicle to require frequent, random left and right steering wheel (3600) corrections to maintain a straight path down a level road.

Shimmy

Shimmy, as observed by the driver, is large, consistent, rotational oscillations of the steering wheel resulting from large, side-to-side (lateral) tire/wheel movements.

Shimmy is usually experienced near 64 km/h (40 mph), and can begin or be amplified when the tire contacts pot holes or irregularities in the road surface.

Nibble

Sometimes confused with shimmy, nibble is a condition resulting from tire interaction with various road surfaces and observed by the driver as small rotational oscillations of the steering wheel.

Poor Returnability/Sticky Steering

Poor returnability and sticky steering is used to describe the poor return of the steering wheel to center after a turn or the steering correction is completed.

Drift/Pull

Pull is a tugging sensation, felt by the hands on the steering wheel, that must be overcome to keep the vehicle going straight.

Drift describes what a vehicle with this condition does with hands off the steering wheel.

- A vehicle-related drift/pull, on a flat road, will cause a consistent deviation from the straight-ahead path and require constant steering input in the opposite direction to counteract the effect.
- Drift/pull may be induced by conditions external to the vehicle (i.e., wind, road camber).

Poor Groove Feel

Poor groove feel is characterized by little or no buildup of turning effort felt in the steering wheel as the wheel is rocked slowly left and right within very small turns around center or straight-ahead (under 20 degrees of steering wheel turn). Efforts may be said to be ''flat on center.''

- Under 20 degrees of turn, most of the turning effort that builds up comes from the mesh of gear teeth in the steering gear (3504). In this range, the steering wheel is not yet turned enough to feel the effort from the self-aligning forces at the road wheel or tire patch.
- In the diagnosis of a roadability problem, it is important to understand the difference between wander and poor groove feel.

Ford Motor Company

DIAGNOSIS AND TESTING

Suspension

Inspection and Verification

1. Road test.
   - Verify the customer's concern by performing a road test on a smooth road.
2. Inspect tires.
   - Check the tire pressure with all normal loads in the vehicle and the tires cold; refer to the vehicle certification (VC) label.
   - Verify that all tires are sized to specification; refer to Section 204-04.
   - Inspect the tires for improper wear and damage; refer to Section 204-04.
3. Inspect chassis and underbody.
   - Remove any excessive accumulation of mud, dirt or road deposits from the chassis and underbody.
4. Inspect for aftermarket equipment.
   - Check for aftermarket changes to the steering, suspension, wheel and tire components (such as competition, heavy duty, etc.) The specifications shown in this manual do not apply to vehicles equipped with aftermarket equipment.
5. If an obvious cause for an observed or reported condition is found, correct the cause (if possible) before proceeding to the next step.
6. If the fault is not visually evident, determine the symptom and proceed to the following symptom chart.

Official Licensed Product Ford Motor Company

Visual Inspection Chart

Mechanical
• Front wheel bearing(s) • Loose or damaged front or rear suspension components • Loose, damaged or missing suspension fastener(s) • Damaged air spring(s) • Damaged or leaking spring and shock absorber(s) • Damaged or leaking shock absorber(s) • Worn or damaged suspension bushing(s) • Loose, worn or damaged steering system components • Damaged axle components

DIAGNOSIS AND TESTING (Continued)

Symptom Chart

Condition	Possible Source	Action
• Dogtracking	• Excessive rear thrust angle. • Front or rear suspension components. • Drive axle damaged.	• ADJUST as necessary. • INSPECT the front and rear suspension system. REPAIR or REPLACE as necessary. REFER to Section 204-01 or Section 204-02. • REPAIR as necessary. REFER to the appropriate section in Group 2.
• Drift/Pull	• Unequal tire pressure. • Excessive side-to-side difference in caster or camber. • Tire forces. • Unevenly loaded or overloaded vehicle. • Steering components. • Brake drag.	• ADJUST tire pressure. • ADJUST as necessary. • ROTATE tires front to rear. • NOTIFY the customer of improper vehicle loading. • REFER to Section 211-00. • REFER to Section 206-00.
• Front Bottoming or Riding Low	• Shock absorber(s). • Suspension load leveling control system.	• REPLACE as necessary. REFER to Section 204-05. • REFER to suspension load leveling control system diagnosis and testing in Section 204-05.
• Improper Tire Wear	• Incorrect tire pressure (rapid center rib or inner and outer edge wear). • Excessive front or rear toe (rapid inner or outer edge wear). • Excessive negative or positive camber (rapid inner or outer edge wear). • Tires out of balance (tires cupped or dished).	• ADJUST tire pressure. • ADJUST as necessary. • ADJUST as necessary. • BALANCE tires.
• Rough Ride	• Shock absorber(s). • Air spring(s). • Suspension load leveling control system.	• GO to the Shock Absorber Inspection component test in this section. • REPLACE as necessary. REFER to Section 204-05. • REFER to suspension load leveling control system diagnosis and testing in Section 204-05.

Official Licensed Product Ford Motor Company

DIAGNOSIS AND TESTING (Continued)

Condition	Possible Source	Action
• Shimmy or Wheel Tramp	• Loose lug nut(s).	• TIGHTEN to specification. REFER to Section 204-04.
	• Loose front suspension fasteners.	• TIGHTEN to specification. REFER to Section 204-01.
	• Front wheel bearing(s).	• GO to the Wheel Bearing Inspection component test in this section.
	• Wheel or tire concerns.	• REFER to Section 204-04.
	• Air spring(s).	• REPLACE as necessary. REFER to Section 204-05.
	• Shock absorber(s).	• GO to the Shock Absorber Inspection component test in this section.
	• Loose, worn or damaged ball joint(s).	• GO to the Ball Joint Inspection component test in this section.
	• Loose, worn or damage steering components.	• REFER to Section 211-00.
	• Front wheel alignment.	• ADJUST as necessary.
• Sticky Steering, Poor Returnability	• Ball joints.	• GO to the Ball Joint Inspection component test in this section.
	• Steering components.	• REFER to Section 211-00.
• Steering Wheel Off-Center	• Unequal front or rear toe settings (side-to-side).	• ADJUST as necessary.
	• Steering components.	• REFER to Section 211-00.
• Sway or Roll	• Overloaded, unevenly or improperly loaded vehicle.	• NOTIFY the customer of improper vehicle loading.
	• Loose lug nut(s).	• TIGHTEN to specification. REFER to Section 204-04.
	• Shock absorber(s).	• GO to the Shock Absorber Inspection component test in this section.
	• Loose stabilizer assembly.	• TIGHTEN to specification. REFER to Section 204-01 or Section 204-02.
	• Worn stabilizer assembly bushing(s).	• REPLACE as necessary. REFER to Section 204-01 or Section 204-02.
	• Air spring(s).	• REPLACE as necessary. REFER to Section 204-05.
	• Suspension load leveling control system.	• REFER to suspension load leveling control system diagnosis and testing in Section 204-05.

Off-Line Used Product Ford Motor Company

DIAGNOSIS AND TESTING (Continued)

Condition	Possible Source	Action
• Vehicle Leans to One Side	• Unevenly loaded or overloaded vehicle. • Front or rear suspension components. • Air spring(s). • Shock absorber(s). • Incorrect ride height. Lateral tilt out of specification. • Suspension load leveling control system.	• NOTIFY the customer of improper vehicle loading. • INSPECT the front and rear suspension system. REPAIR or REPLACE as necessary. REFER to Section 204-01 or Section 204-02. • REPLACE as necessary. REFER to Section 204-05. • GO to the Shock Absorber Inspection component test in this section. • ADJUST the suspension load leveling control system. REFER to Section 204-05. • REFER to suspension load leveling control system diagnosis and testing in Section 204-05.
• Vibration/Noise	• Tires and wheel concerns. • Wheel bearings. • Wheel hubs. • Brake components. • Suspension components. • Steering components.	• REFER to Section 100-04.
• Wander	• Unevenly loaded or overloaded vehicle. • Ball joint(s). • Front wheel bearing(s). • Loose, worn or damaged suspension components(s). • Loose suspension fasteners. • Steering components. • Wheel alignment.	• NOTIFY the customer of improper vehicle loading. • GO to the Ball Joint Inspection component test in this section. • GO to the Wheel Bearing Inspection component test in this section. • REPLACE as necessary. REFER to Section 204-01 or Section 204-02. • TIGHTEN to specification. REFER to Section 204-01 or Section 204-02. • REFER to Section 211-00. • ADJUST as necessary (excessive total front toe out).

Office Licensed Product Ford Motor Company

DIAGNOSIS AND TESTING (Continued)

Component Tests

Ball Joint Inspection

1. **WARNING: THE ELECTRICAL POWER TO THE AIR SUSPENSION SYSTEM MUST BE SHUT OFF PRIOR TO HOISTING, JACKING OR TOWING AN AIR SUSPENSION VEHICLE. THIS CAN BE ACCOMPLISHED BY TURNING OFF THE AIR SUSPENSION SWITCH LOCATED IN THE REAR JACK STORAGE AREA. FAILURE TO DO SO CAN RESULT IN UNEXPECTED INFLATION OR DEFLATION OF THE AIR SPRINGS, WHICH CAN RESULT IN SHIFTING OF THE VEHICLE DURING THESE OPERATIONS.**

   Raise and support the vehicle; refer to Section 100-02.
2. Prior to performing any inspection of the ball joints, inspect the front wheel bearing (1216).
3. Position a safety stand beneath the front suspension lower arm (3079) to be tested.

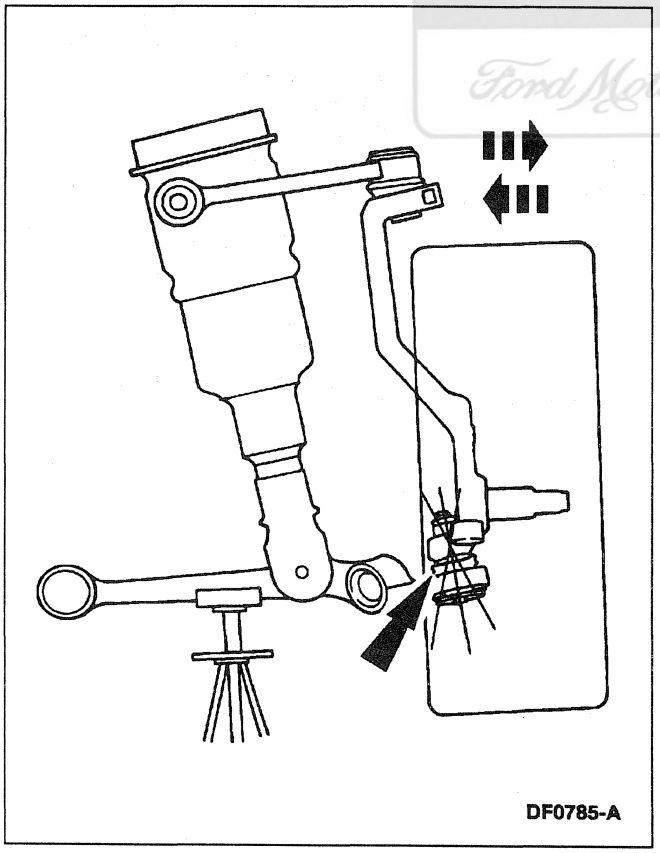

4. While an assistant pulls and pushes the bottom of the tire, observe the relative movement between the lower spindle arm and the front suspension lower arm ball joint. Any movement at or exceeding the specification indicates a worn or damaged lower ball joint. Replace as necessary; refer to Section 204-01.

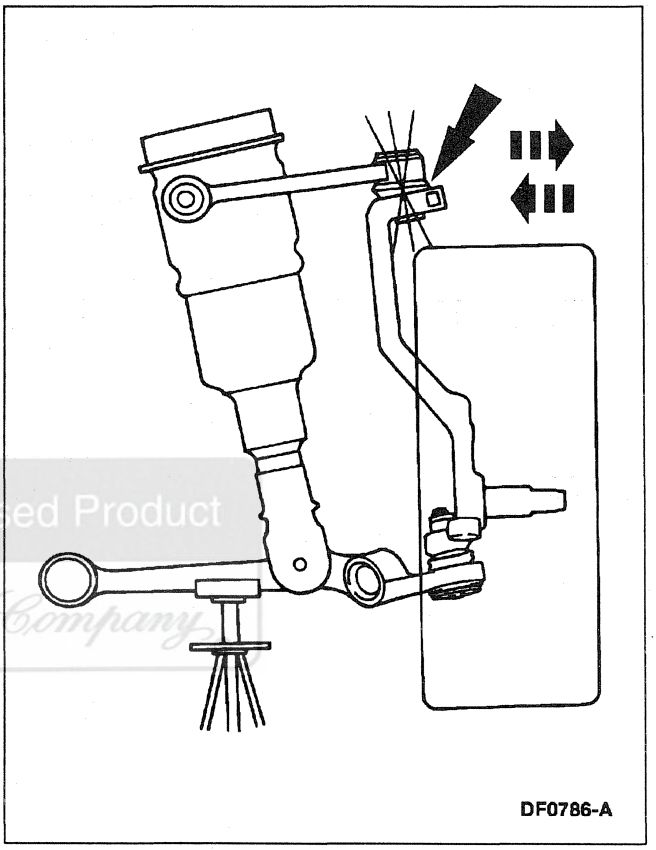

5. While an assistant pulls and pushes the top of the tire, observe the relative movement between the upper spindle arm and the front suspension upper arm ball joint. Movement at or exceeding the specification indicates a worn or damaged upper ball joint. Replace the upper ball joint as necessary; refer to Section 204-01.

Official Licensed Product
Ford Motor Company

DIAGNOSIS AND TESTING (Continued)

Shock Absorber Inspection

1. **WARNING: THE ELECTRICAL POWER TO THE AIR SUSPENSION SYSTEM MUST BE SHUT OFF PRIOR TO HOISTING, JACKING OR TOWING AN AIR SUSPENSION VEHICLE. THIS CAN BE ACCOMPLISHED BY TURNING OFF THE AIR SUSPENSION SWITCH LOCATED IN THE RH KICK PANEL AREA. FAILURE TO DO SO CAN RESULT IN UNEXPECTED INFLATION OR DEFLATION OF THE AIR SPRINGS, WHICH CAN RESULT IN SHIFTING OF THE VEHICLE DURING THESE OPERATIONS.**

   WARNING: THE LOW PRESSURE GAS SHOCK ABSORBERS ARE CHARGED WITH NITROGEN GAS TO 931 KPA (135 PSI) FOR 1-3/16 INCH BORE, AND 1034 KPA (150 PSI) FOR 1-3/8 INCH BORE. DO NOT ATTEMPT TO OPEN, PUNCTURE, OR APPLY HEAT TO THE SHOCK ABSORBERS.

   CAUTION: The rear shock absorbers act as the rebound stops for the rear suspension. When rear shock absorbers are removed, the suspension arms must be restrained to prevent damage to these components. The best method for rear shock absorber removal is to use a drive-on hoist or alignment pit.

   Raise and support the vehicle; refer to Section 100-02.

2. Inspect for evidence of fluid leakage.
   - Leakage is a condition in which the shock absorber body is covered with oil. In severe cases there may be oil dripping from the shock.
   - Weepage is a light film of oil on the shock absorber piston rod and is a result of proper shock lubrication. Weepage is a condition in which a thin film of oil is deposited on the upper portion of the shock body and is normally noticed due to the collection of dust in this area.
3. Inspect for damaged or worn shock absorber insulators.
4. Disconnect the lower end of the shock absorber.
5. Inspect the shock for proper operation.
   1 Compress and extend the shock absorber as fast as possible, using as much travel as possible.
   2 Inspect for the following abnormal conditions:
   - A lag or skip occurring during mid-stroke when the shock absorber is properly installed and primed.
   - Any seizing during the shaft full travel, except at either end of the travel.
   - Any noise, other than a faint swish, such as a clicking noise upon fast stroke reversal.
   - Any lateral motion of the piston rod in relation to the body with the shock absorber fully extended.
6. Replace any unserviceable shock absorbers or shock absorber insulators.

Wheel Bearing Inspection

1. Raise the vehicle until the tire is off the floor; refer to Section 100-02.
2. **NOTE:** Make sure the wheel rotates freely and the brake pads are retracted sufficiently to allow movement of the tire and wheel assembly.

   Grasp each front tire at the top and bottom and move the wheel inward and outward while lifting the weight of the tire off the front wheel bearing.
3. If the tire and wheel (hub) is loose on the wheel spindle or does not rotate freely. Replace the wheel hub (1104); refer to Section 204-01.

Official Licensed Product Ford Motor Company

GENERAL PROCEDURES

Camber and Caster Adjustment — Front

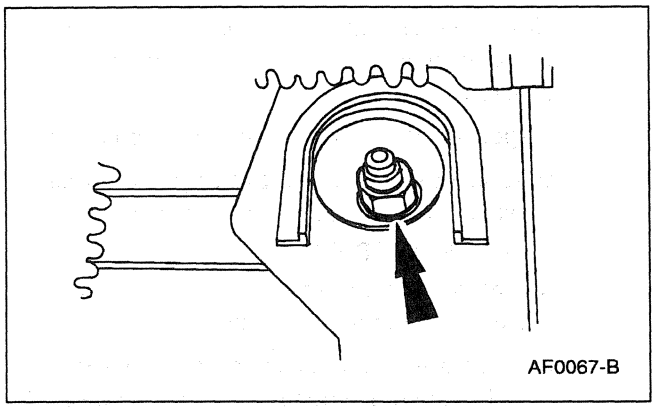

1. Loosen the nut.

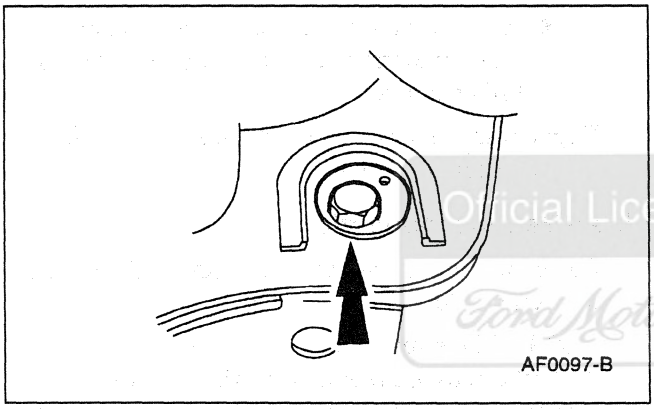

2. Rotate the pivot bolt and the cam to the desired camber setting.

Official Licensed Product
Ford Motor Company

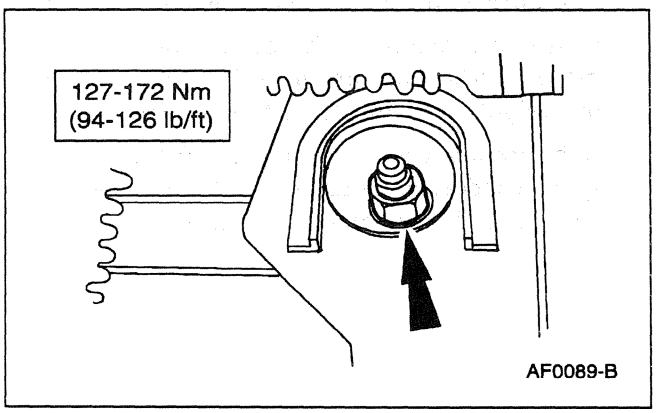

3. Tighten the nut while holding the pivot bolt and the cam stationary.

GENERAL PROCEDURES (Continued)

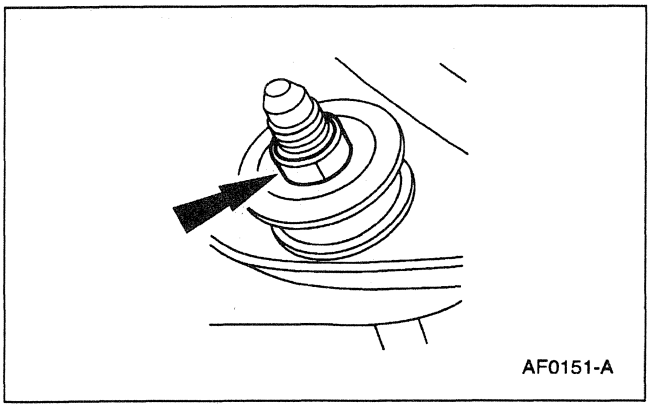

4. Loosen the front suspension lower arm strut front nut at the front sub-frame (5C145).

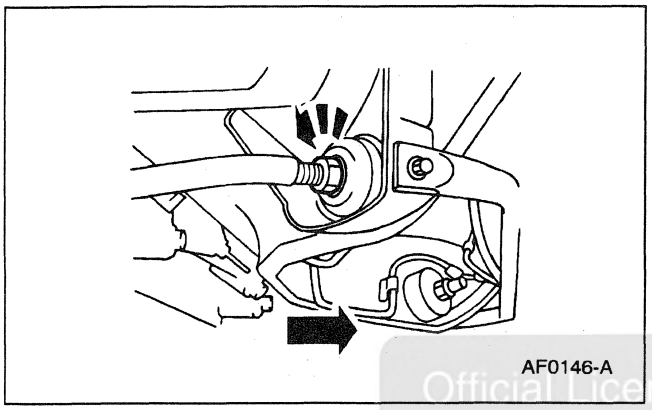

5. Adjust the front suspension lower arm strut nut behind the subframe toward the front of the vehicle to decrease caster, and toward the rear of the vehicle to increase caster.

Official Licensed Product
Ford Motor Company

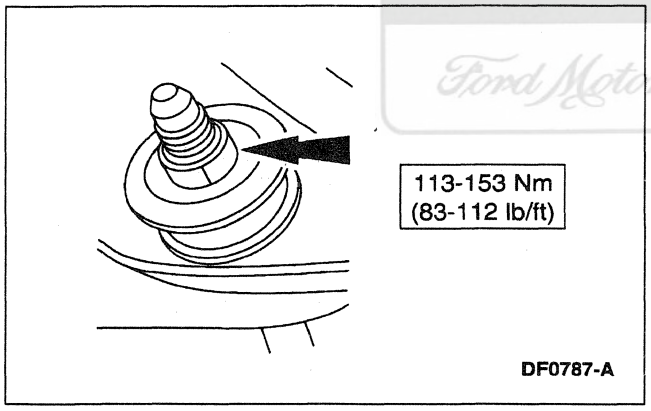

6. Tighten the front nut while holding the rear nut.

Camber and Caster Adjustment — Rear

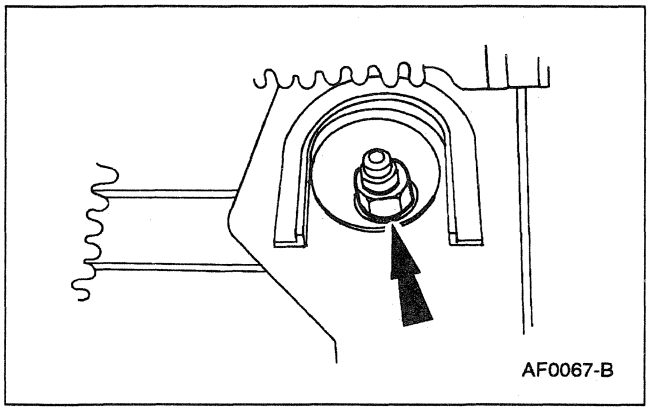

1. **NOTE:** The recommended adjustment sequence for rear alignment is to set camber and then toe. Toe should be rechecked prior to final tightening.

   Loosen the rear upper suspension arm nut.

GENERAL PROCEDURES (Continued)

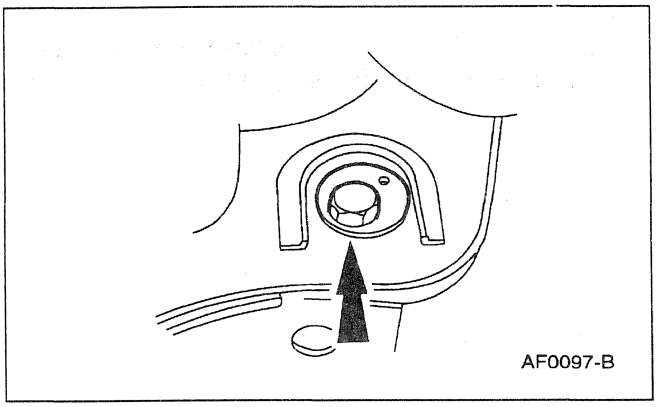

2. Rotate the pivot bolt and the cam to the desired camber setting.

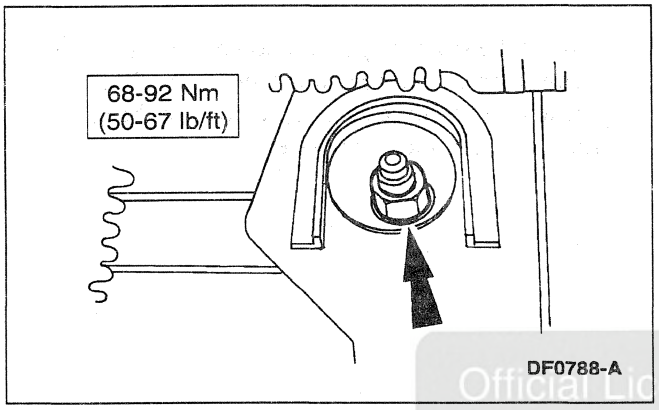

3. Tighten the nut while holding the pivot bolt and the cam stationary.

Official Licensed Product
Ford Motor Company

Toe Adjustment — Front

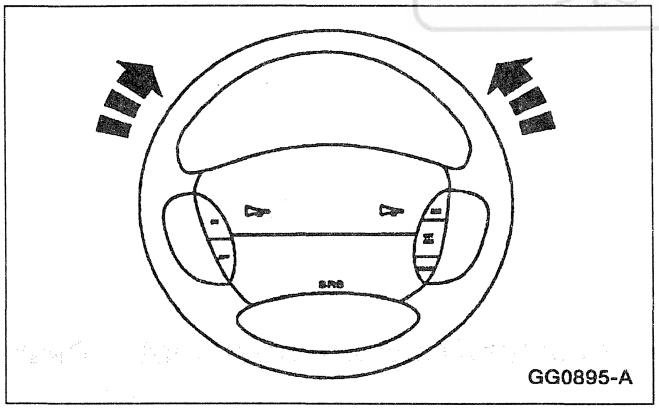

1. Start the engine (6007) and center the steering wheel (3600) .

2. Turn the engine off, and hold the steering wheel in the ''straight forward'' position by attaching a rigid link from the steering wheel to the seat.

3. Check the toe settings; follow the manufacturer's instructions.

GENERAL PROCEDURES (Continued)

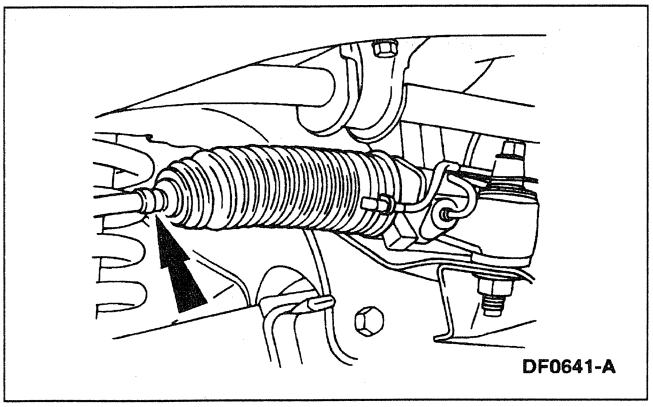

4. **NOTE:** Do not allow the steering gear bellows to twist when the front wheel spindle tie rod (3280) is rotated.

   Remove the clamps.

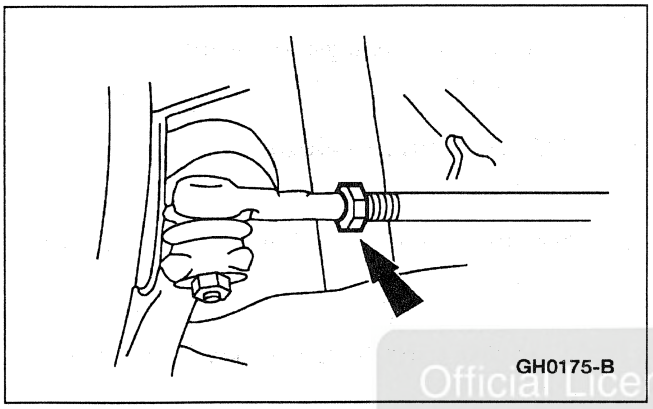

5. Loosen the nuts.
   - Clean and lubricate the nut(s) and front wheel spindle tie rod threads.

Official Licensed Product
Ford Motor Company

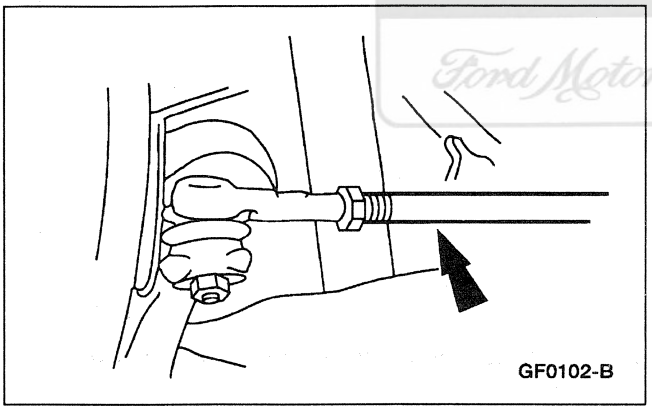

6. Rotate the front wheel spindle tie rods .

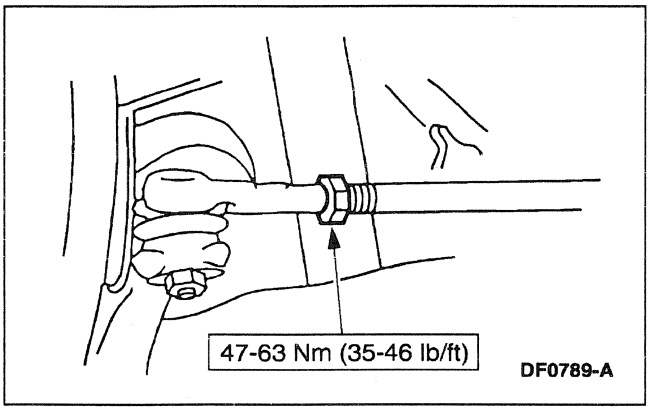

7. Tighten the nuts.

GENERAL PROCEDURES (Continued)

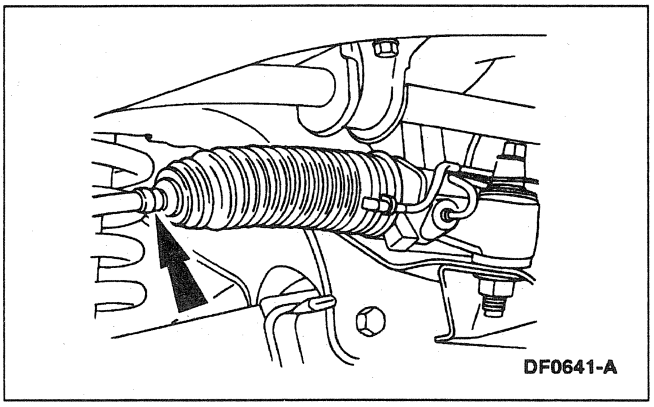

8. Install the clamps.

9. Recheck the toe settings; follow the manufacturer's instructions.

Toe Adjustment — Rear

1. Check the toe settings; follow the manufacturer's instructions.

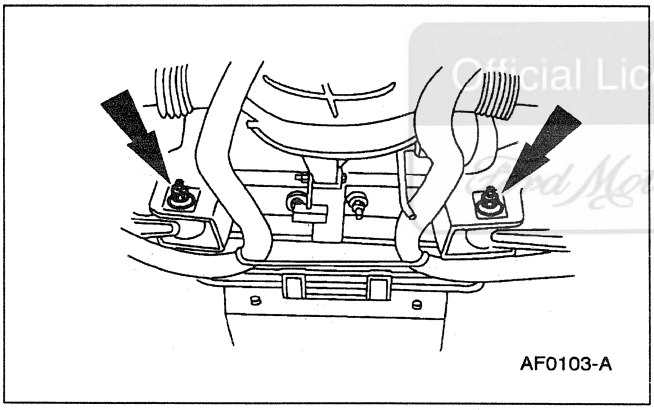

2. Loosen the nut on the rear suspension lower arm pivot bolt.

Official Licensed Product
Ford Motor Company

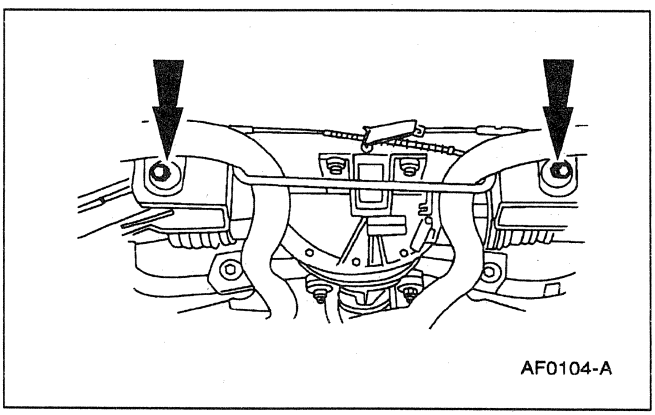

3. Rotate the pivot bolt and the cam to the desired toe setting.

GENERAL PROCEDURES (Continued)

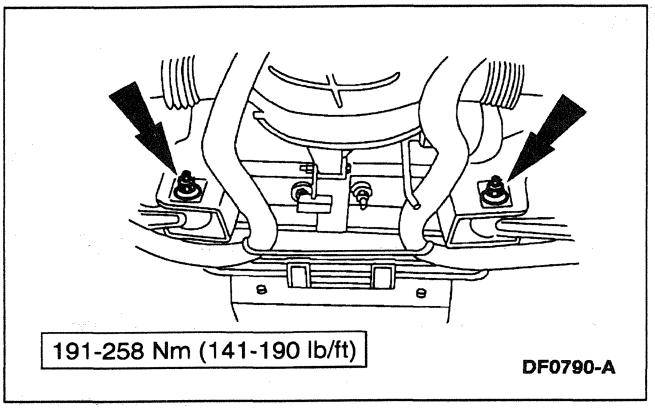

4. Tighten the nut to specification while holding the pivot bolt and the adjuster cam stationary.

5. Recheck the toe settings; follow the manufacturer's instructions.

SPECIFICATIONS

Item	LH	RH	Total/ Split
Alignment Specifications — Front			
Caster	5.50° ± 0.75°	5.50° ± 0.75°	0° ± 0.75°
Camber	-0.50° ± 0.75°	-0.50° ± 0.75°	0° ± 0.75°
Toe (Positive value is toe-in, negative value is toe-out)	—	—	0.25° ± 0.25°
Alignment Specifications — Rear			
Caster	—	—	—
Camber	-0.5° ± 0.5°	-0.5° ± 0.5°	0° ± 0.50°
Toe (Positive value is toe-in, negative value is toe-out)	0.06° ± 0.25°	0.06° ± 0.25°	0.12° ± 0.25°

General Specifications

Item	Specification
Clear Vision	
Clear Vision (Negative value is counterclockwise)	-1.8° ± 3°
Vehicle Ride Height	
Front	33.2 mm (1.3 in.)
Rear	-2.6 mm (0.1 in.)

(Continued)

General Specifications

Item	Specification
Ball Joint Radial Play	
Lower Ball Joint — Maximum	0.8 mm (1/32 in.)
Upper Ball Joint — Maximum	0.8 mm (1/32 in.)
Vehicle Lean (Side-to-Side Height Differences)	
Front — Maximum	13 mm (0.5 in.)
Rear — Maximum	13 mm (0.5 in.)
Vehicle Attitude (Front-to-Rear Height Difference)	
Maximum Vehicle Attitude	19 mm (0.75 in.)

Torque Specifications

Description	Nm	Lb/Ft
Rear Suspension Lower Arm Nut (Rear Toe)	191-258	141-190
Front Axle Wheel Hub Retainer	255-345	188-254
Rear Axle Wheel Hub Retainer	255-345	188-254
Rear Camber Adjustment Nut	47-63	35-46
Front Suspension Lower Arm Pivot Nut	127-172	94-126
Front Suspension Lower Arm Strut Nut	113-153	83-112
Tie Rod jam Nuts	68-92	50-67

SECTION 204-01 Front Suspension

VEHICLE APPLICATION: Mark VIII

SUBJECT	PAGE
DESCRIPTION AND OPERATION	
Front Suspension	204-01-2
DIAGNOSIS AND TESTING	
Front Suspension	204-01-4
REMOVAL AND INSTALLATION	
Arm — Bushing	204-01-6
Arm — Lower	204-01-9
Bar and Link	204-01-17
Lug Bolts	204-01-4
Spindle	204-01-19
Spring and Shock Assembly	204-01-22
Wheel Hub and Bearing	204-01-5
GENERAL PROCEDURES	
Ride Height	204-01-24
Wheel Alignment	204-01-24
SPECIFICATIONS	204-01-25

Official Licensed Product
Ford Motor Company

DESCRIPTION AND OPERATION

Front Suspension

WARNING: ALL VEHICLES ARE EQUIPPED WITH GAS-PRESSURIZED SHOCK ABSORBERS WHICH WILL EXTEND UNASSISTED. DO NOT APPLY HEAT OR FLAME TO THE SHOCK ABSORBERS DURING REMOVAL OR COMPONENT SERVICING.

CAUTION: All front suspension fasteners are important attaching parts because they can affect the performance of vital parts and systems and can result in major service expense. Any part must be replaced with one of the same part number or with an exact equivalent part if replacement becomes necessary. Do not use a replacement part of lesser quality or substitute design. Torque values must be used as specified during assembly to maintain proper retention of this part. Never attempt to heat, quench or straighten any front suspension part. Replace with a new part.

Official Licensed Product
Ford Motor Company

DESCRIPTION AND OPERATION (Continued)

Front Suspension

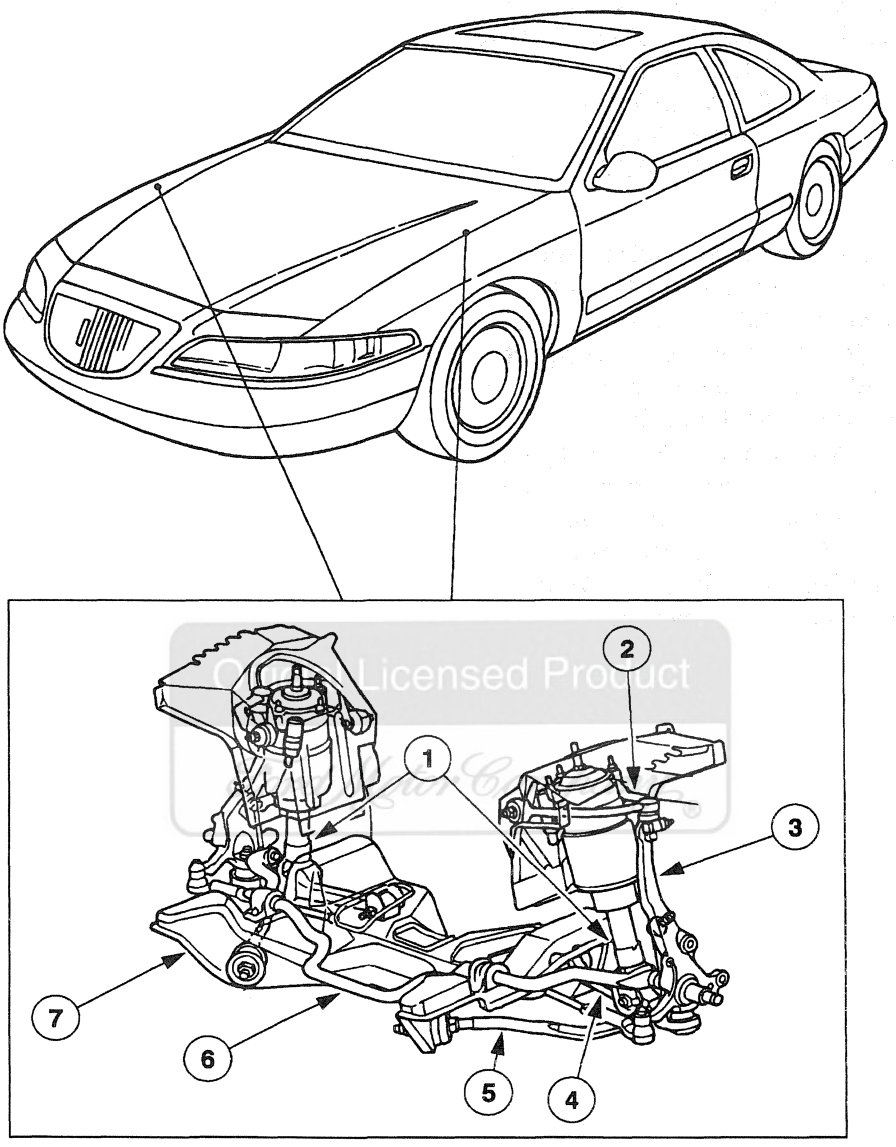

Item	Part Number	Description
1	3C098	Front Spring and Shock
2	3091	Front Suspension Upper Arm Bushing Joint (LH)
2	3084	Front Suspension Upper Arm Bushing Joint (RH)
3	3105	Front Wheel Spindle

(Continued)

Item	Part Number	Description
4	3079	Front Suspension Lower Arm (LH)
4	3078	Front Suspension Lower Arm (RH)
5	3468	Front Suspension Lower Arm Strut

(Continued)

DESCRIPTION AND OPERATION (Continued)

Item	Part Number	Description
6	5482	Front Stabilizer Bar

Item	Part Number	Description
7	5C145	Front Sub-Frame

(Continued)

DIAGNOSIS AND TESTING

Front Suspension

Refer to Section 204-00.

REMOVAL AND INSTALLATION

Lug Bolts

Removal

1. Remove the wheel hub (1104) ; refer to Wheel Hub and Bearing in this section.
2. Using a press, remove the lug bolt (1107) from the wheel hub .

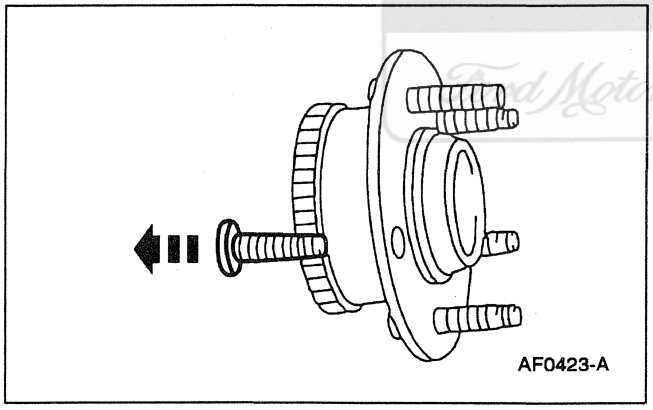

Installation

1. Using a press, install a new lug bolt .

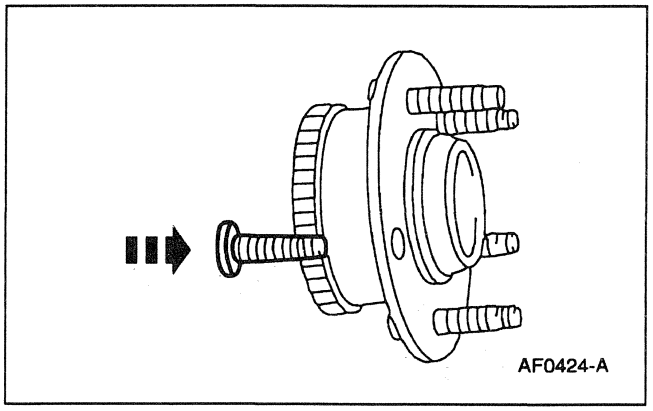

Official Licensed Product
Ford Motor Company

REMOVAL AND INSTALLATION (Continued)

2. Install the wheel hub ; refer to Wheel Hub and Bearing in this section.

Wheel Hub and Bearing

Removal

1. Raise the vehicle on a hoist; refer to Section 100-02.

2. Remove the wheel and tire assembly; refer to Section 100-02.

3. **NOTE:** Mark the front disc brake rotor and the lug bolt so the front disc brake rotor can be installed in the same position.

   Remove the front disc brake caliper and the anchor plate, the disc brake rotor and the disc brake rotor shield. Support the disc brake caliper with wire; refer to Section 206-03.

Official Licensed Product
Ford Motor Company

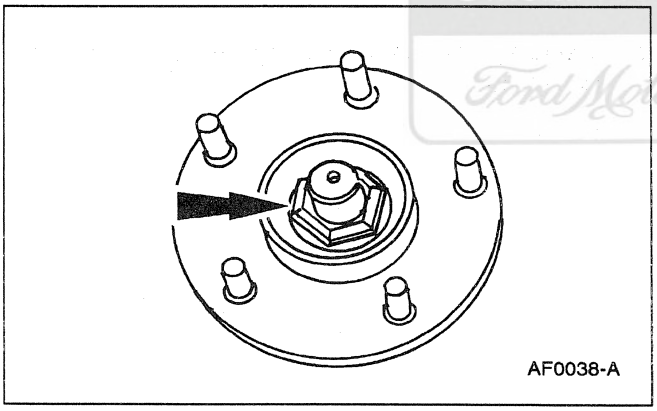
AF0038-A

4. Remove the wheel hub (1104).
   - Remove and discard the front hub cap grease seal (1N135)
   - Remove and discard the front axle wheel hub retainer (3B477)

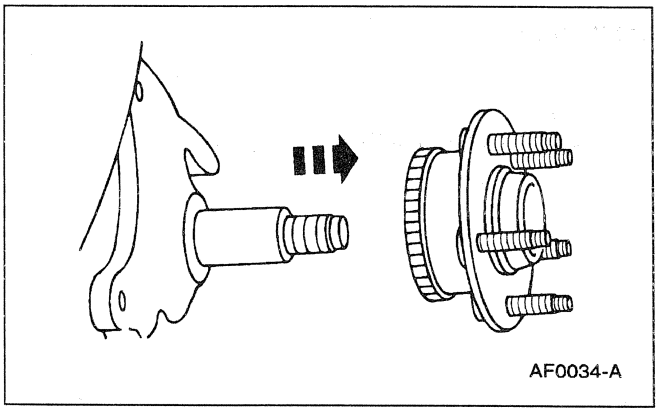
AF0034-A

5. Remove the wheel hub.

REMOVAL AND INSTALLATION (Continued)

Installation

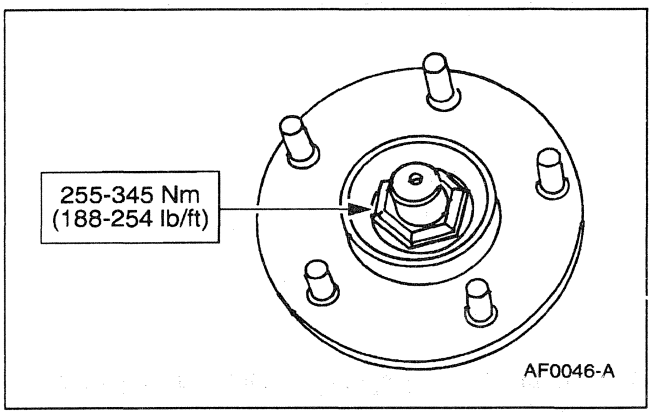

1. Follow the removal procedure in reverse order.

Arm — Bushing

Special Tool(s)

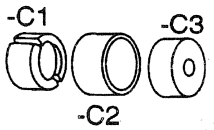 ST1116-A	Bushing Receiving Cup Set 204-S152 (T89P-5638-C)—Consists of: 204-153 (T89P-5638-C1) Remover Collets (2) 204-154 (T89P-5638-C2) Ring 204-155 (T89P-5638-C3) Bushing Remover
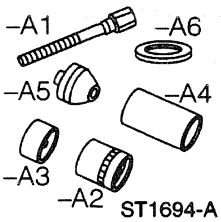 ST1694-A	Suspension Bushing Service Set 204-S030 (T78P-5638-A) Consists of: Thrust Screw 204-031 (T78P-5638-A1) Remover Receiving Cup 204-034 (T78P-5638-A4) Bushing Remover 204-035 (T78P-5638-A5)

(Continued)

Special Tool(s)

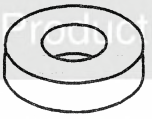 ST1118-A	Bushing Remover 204-156 (T89P-5638-D)
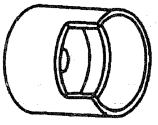 ST1119-A	Bushing Replacer 204-157 (T89P-5638-E)

Removal

1. **NOTE:** The bushing is not replaceable. If replacement is required, the complete front suspension lower arm (3079) assembly must be replaced.

   Remove the front spring and shock (3C098); refer to the Spring and Shock Assembly in this section.

REMOVAL AND INSTALLATION (Continued)

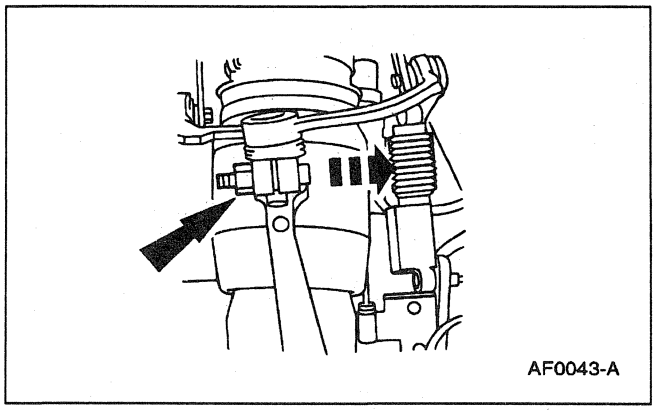

2. Remove and discard the upper spindle to front suspension arm ball joint pinch bolt and nut.

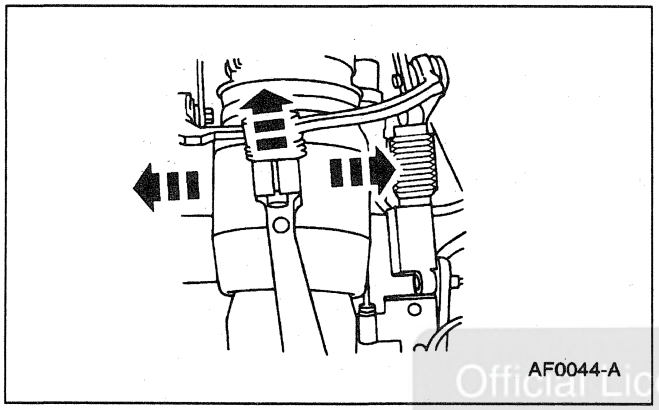

3. **NOTE:** Slightly spread the slot in the top of the spindle.

   Separate the front suspension arm bushing joint (3085) from the spindle.

Official Licensed Product
Ford Motor Company

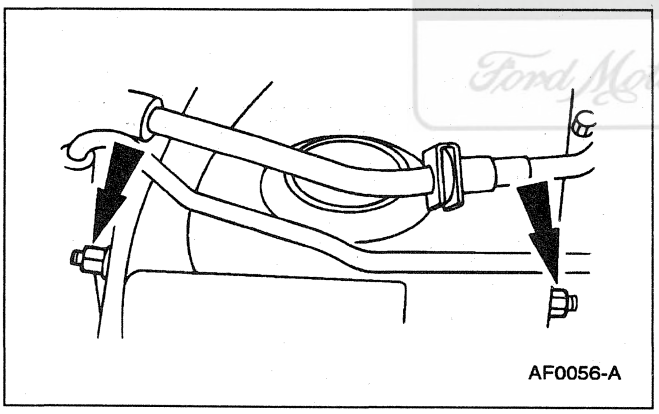

4. Remove the front suspension arm bushing joint.
   - In the engine compartment, remove the upper arm to shock tower retaining nuts.
   - Remove the upper arm bolts.

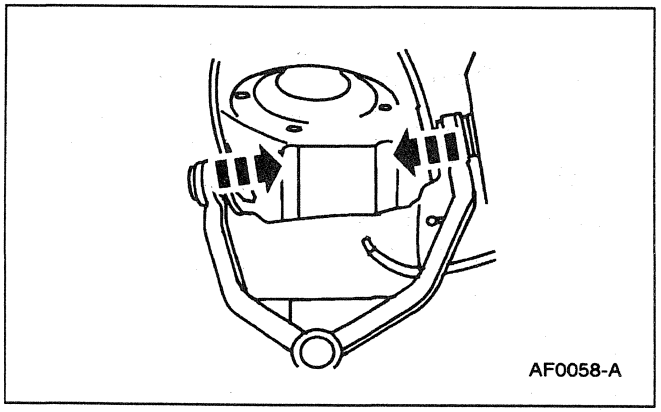

5. Remove the upper arm from the vehicle.
   - If the bushings are ok, or the front suspension arm bushing joint is being replaced, proceed to installation step 3.

REMOVAL AND INSTALLATION (Continued)

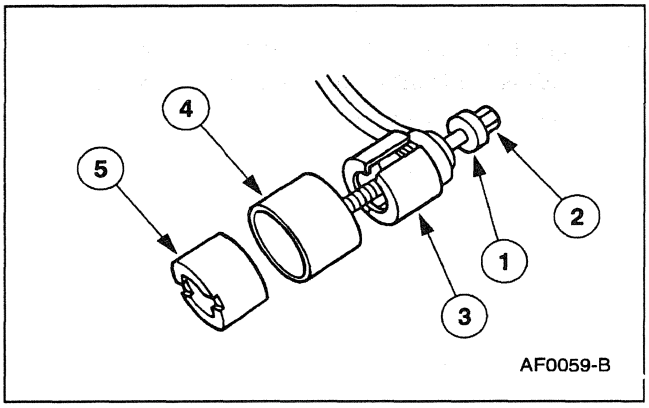

AF0059-B

6. Install the bushing removal tools.
   1 Place the Bushing Remover onto the thrust screw.
   2 Insert the thrust screw through the bushing.
   3 Place the remover collets over the bushing flange.
   4 Place the ring over the remover collets.
   5 Thread the Bushing Replacer onto the thrust screw.

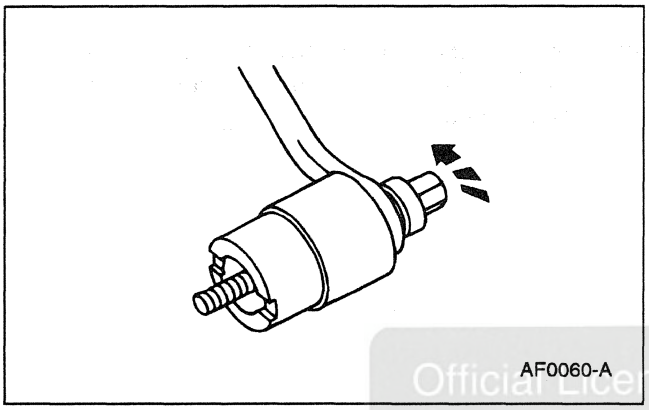
AF0060-A

7. Turn the thrust screw clockwise to force the bushing out.

Official Licensed Product
Ford Motor Company

Installation

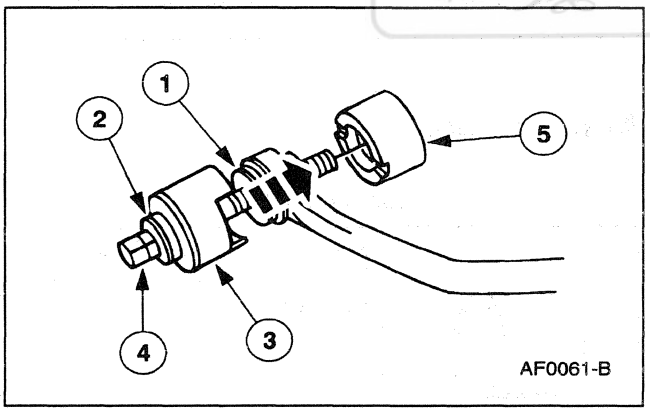

AF0061-B

1. Install the new bushing.
   1 Position the new bushing into the upper arm from the outside.
   2 Place the Bushing Remover onto the thrust screw.
   3 Place the Bushing Replacer onto the thrust screw.
   4 Insert the thrust screw through the bushing.
   5 Thread the Bushing Replacer onto the thrust screw.

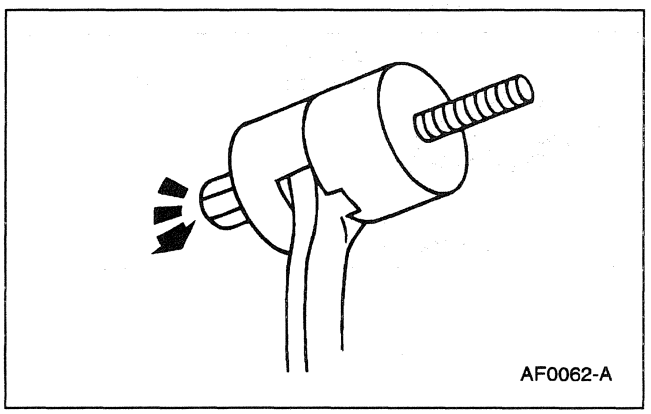
AF0062-A

2. Turn the thrust screw clockwise until the halves of the Bushing Replacer bottom out against each other.

REMOVAL AND INSTALLATION (Continued)

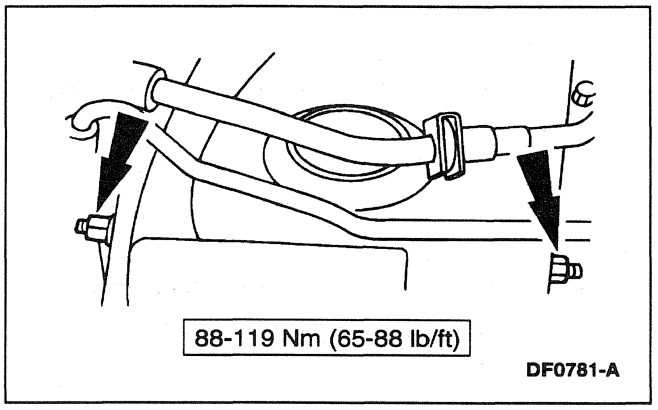

3. Tighten mounting bolts to specification while holding the front suspension arm ball joint in a horizontal position.

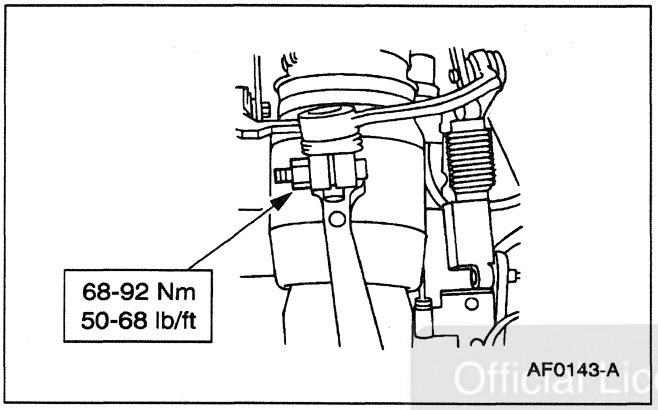

4. Position the ball joint and install a new upper spindle to front suspension arm ball joint pinch bolt and nut.

Official Licensed Product
Ford Motor Company

5. Install the front spring and shock assembly; refer to Spring and Shock Assembly in this section.

Arm — Lower

Special Tool(s)

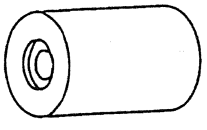 ST1120-A	Ball Joint Remover 204-D015 (D89P-3010-A) or Equivalent
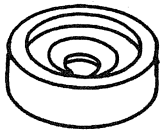 ST1121-A	Ball Joint Replacer 204-D016 (D89P-3010-B) or Equivalent

(Continued)

Special Tool(s)

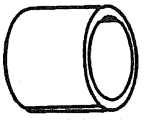 ST1122-A	Receiving Cup—2-1/2 Inch OD 211-D006 (D84P-3395-A4) or Equivalent
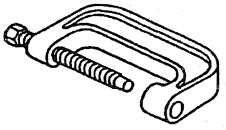 ST1172-A	U-Joint Tool 205-086 (T74P-4635-C)

REMOVAL AND INSTALLATION (Continued)

Removal

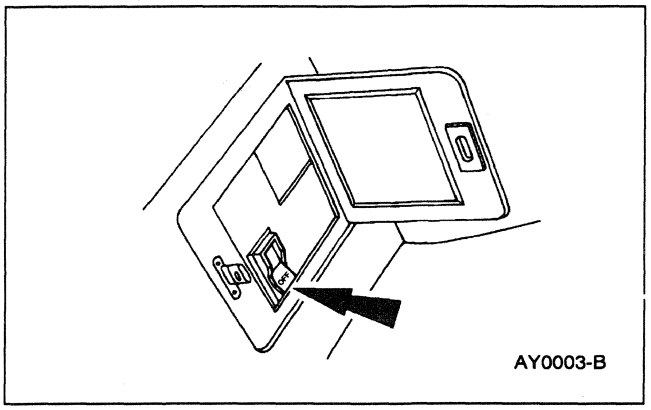

1. **WARNING: THE ELECTRICAL POWER TO THE AIR SUSPENSION SYSTEM MUST BE TURNED OFF PRIOR TO HOISTING, JACKING OR TOWING AN AIR SUSPENSION VEHICLE. FAILURE TO DO SO CAN RESULT IN UNEXPECTED INFLATION OR DEFLATION OF THE AIR SPRINGS, WHICH CAN RESULT IN SHIFTING OF THE VEHICLE DURING THESE OPERATIONS.**

   Turn the air suspension switch OFF.

2. Raise the vehicle on a hoist; refer to Section 100-02.

3. Remove the wheel and tire assembly; refer to Section 204-04.

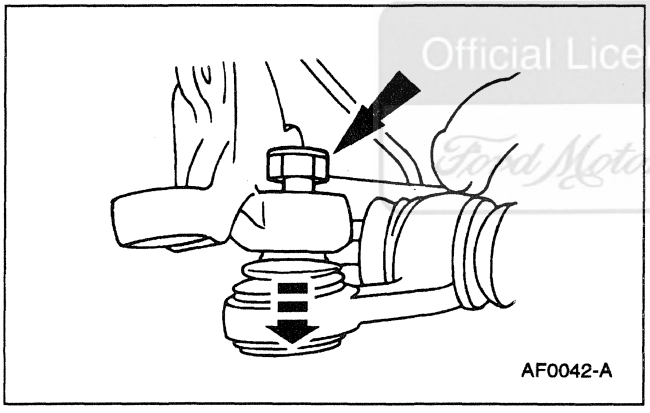

4. **NOTE:** Support the spindle by wire or other means to prevent excessive sagging.

   Separate the front suspension lower arm ball joint (3050) from the spindle.

   - Remove the ball joint-to-spindle retaining nut.
   - While pulling down on the front suspension lower arm ball joint, rap the spindle with a hammer.

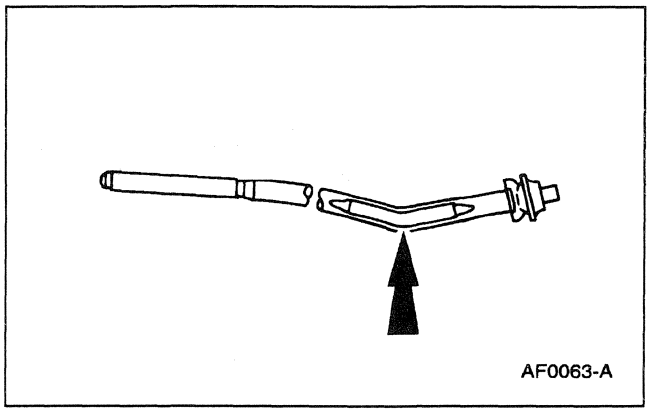

5. **CAUTION: Do not apply any tools to the elbow area of the front suspension lower arm strut (3468) or damage will occur.**

   Mark the position of the large nut on the front suspension lower arm strut behind the sub-frame mount.

Official Licensed Product
Ford Motor Company

REMOVAL AND INSTALLATION (Continued)

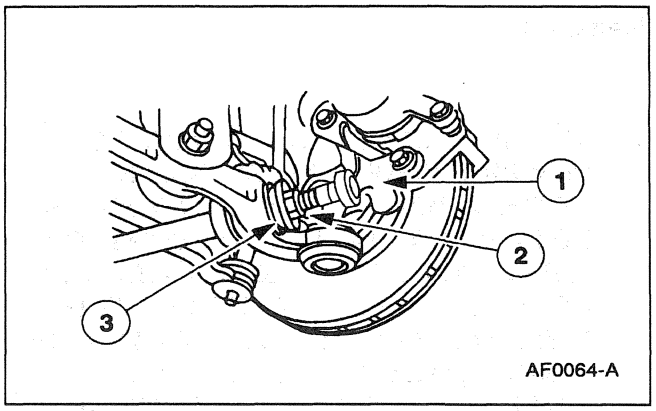

6. Remove the lower arm strut front retaining nut and bushing.
   1 Remove the rubber bumper.
   2 Remove and discard the lower arm strut retaining nut at the front suspension lower arm.
   3 Remove the washer and bushing.

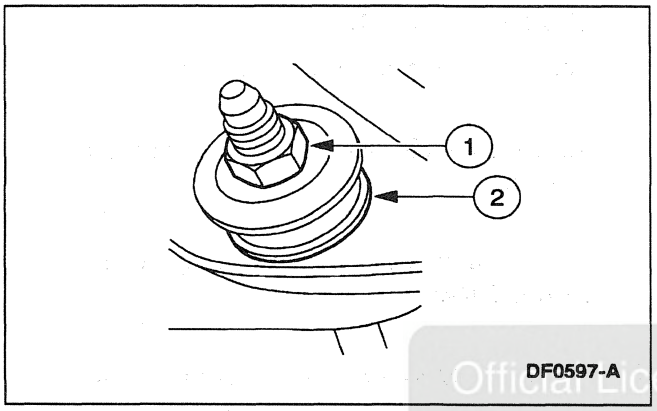

7. Remove the lower arm strut rear retaining nut and bushing.
   1 Remove and discard the lower arm strut retaining nut at the sub-frame.
   2 Remove the washer, bushing and the ferrule.

Official Licensed Product
Ford Motor Company

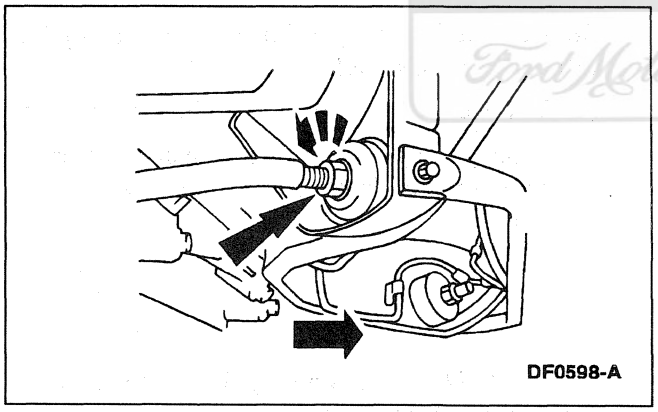

8. Back off the large nut on the lower arm strut behind the sub-frame and remove the front suspension lower arm strut.

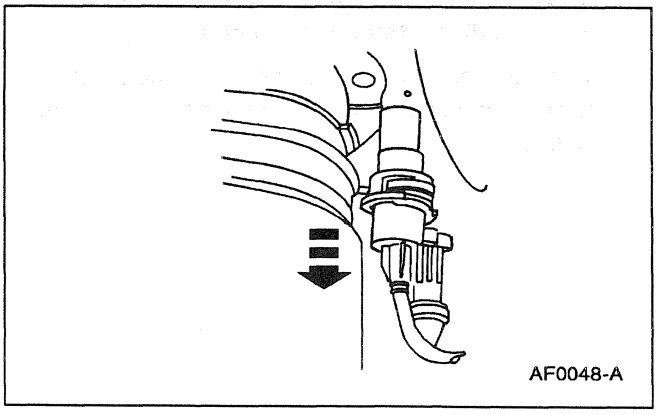

9. Discharge the air suspension system and remove the solenoid valve; refer to Section 204-05.

REMOVAL AND INSTALLATION (Continued)

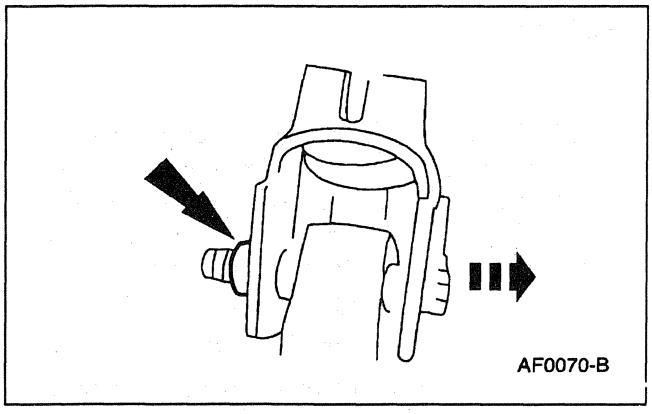

10. Remove the front spring and shock to front suspension lower arm nut and bolt.

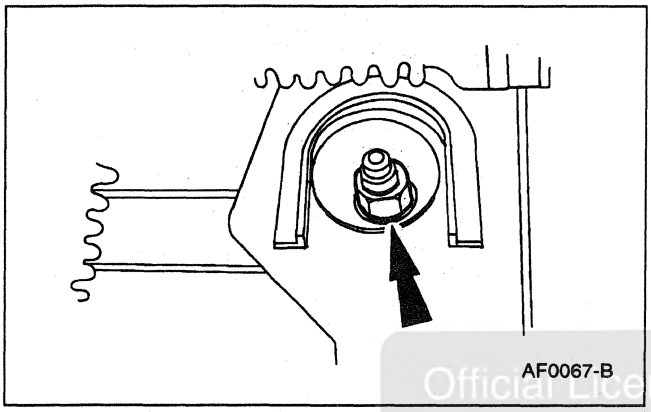

11. **NOTE:** Mark the position of the camber adjustment cam.

    Remove the front suspension lower arm pivot nut and bolt.

Official Licensed Product
Ford Motor Company

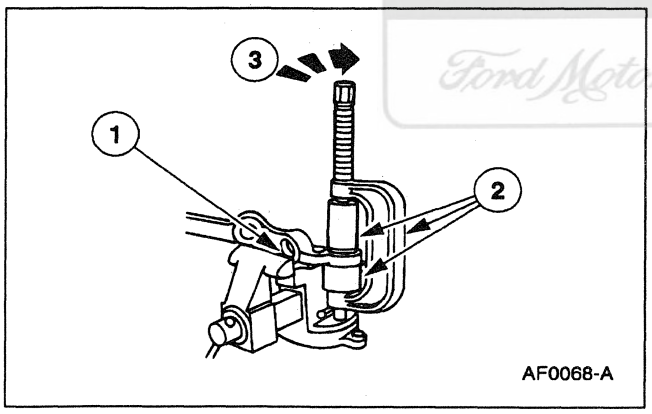

12. Remove the front suspension lower arm ball joint.
    1 Clamp the front suspension lower arm (3078) in a vise.
    2 Assemble the Ball Joint Remover, the Remover Receiving Cup and the U-Joint Tool.
    3 Press out the front suspension lower arm ball joint.

REMOVAL AND INSTALLATION (Continued)

Installation

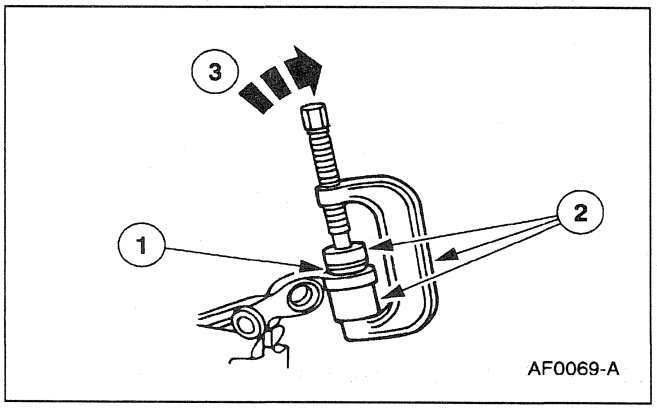

1. **NOTE:** When installing a new front suspension lower arm ball joint , the protective cover should be left in place during installation to protect the front suspension lower arm ball joint seal. It may be necessary to cut off the end of the cover to allow it to pass through the receiving cup.

   Install the front suspension lower arm ball joint .

   1 Place the new ball joint into the lower arm.

   2 Assemble the Ball Joint Replacer, the U-Joint Tool and the Remover Receiving Cup.

   3 Press the ball joint into place and remove the protective covering.

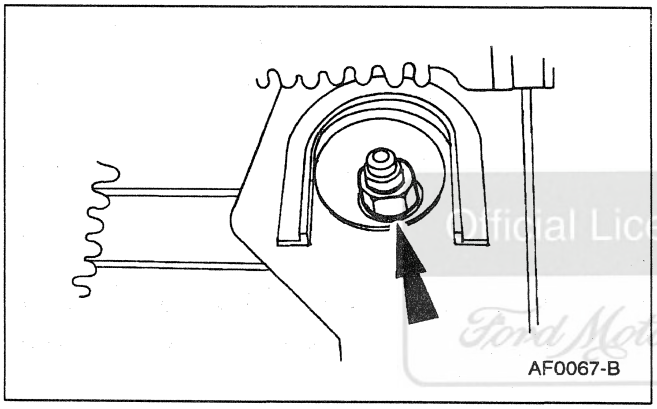

2. Position the front suspension lower arm (3079) in the vehicle. Loosely install the pivot bolt, the front suspension lower arm adjustment cam (3B236) and a new nut.

Official Licensed Product
Ford Motor Company

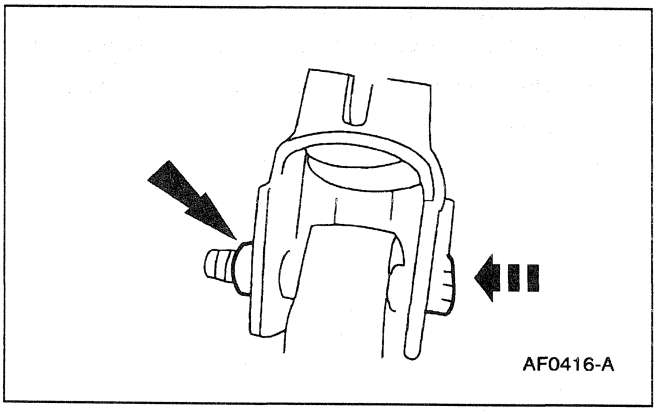

3. Loosely install the front spring and shock to the front suspension lower arm nut and bolt.

REMOVAL AND INSTALLATION (Continued)

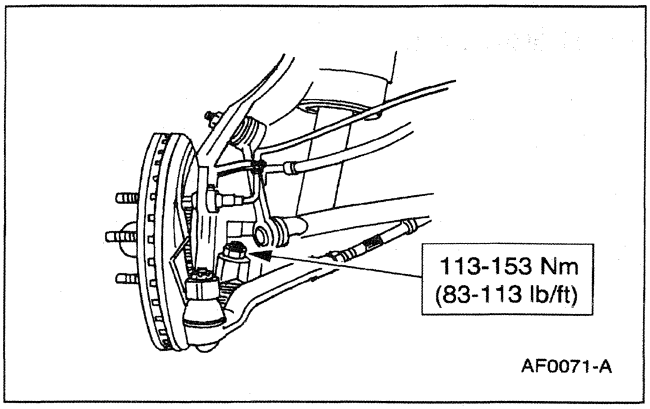

4. Attach the front suspension lower arm ball joint to the spindle and tighten the new nut to specification.

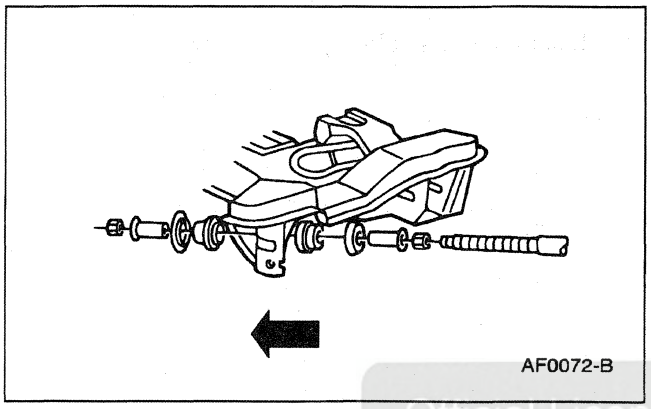

5. **NOTE:** Deburr the front suspension lower arm strut ferrules (3B282) before reassembly. If the new front suspension lower arm strut ferrules are used, the inner front suspension lower arm strut ferrule must be shorter than the outer front suspension lower arm strut ferrule .

   Cut up to 6 mm (0.25 inch) off the inner front suspension lower arm strut ferrule and deburr if necessary.

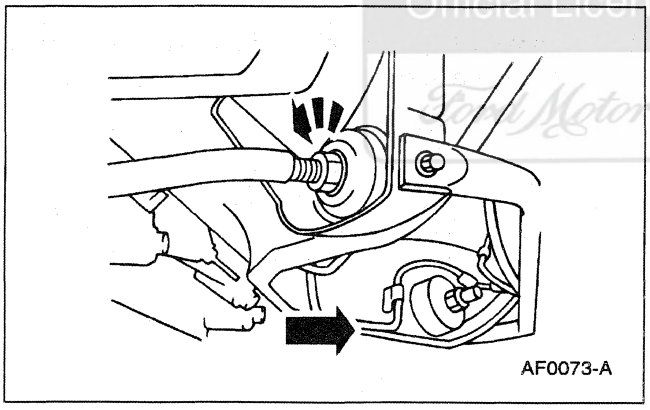

Official Licensed Product
Ford Motor Company

6. Install the front suspension lower arm strut into the sub-frame with the large nut all the way down on the threads.

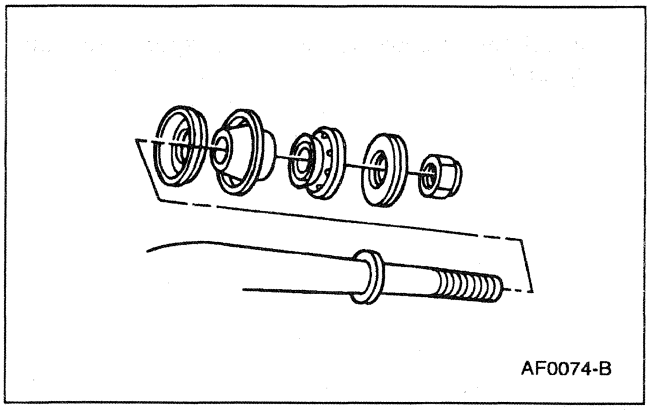

7. Attach the front suspension lower arm strut to the front suspension lower arm.

REMOVAL AND INSTALLATION (Continued)

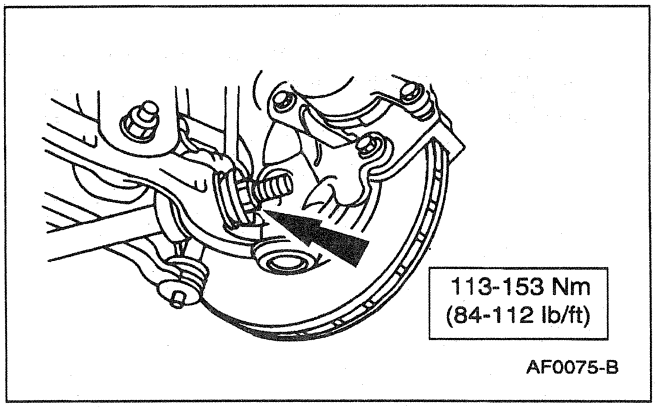

8. Tighten the nut.

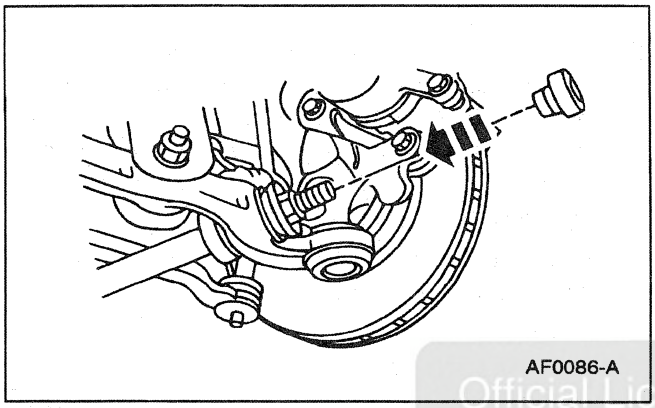

9. Install the rubber bumper.

Official Licensed Product
Ford Motor Company®

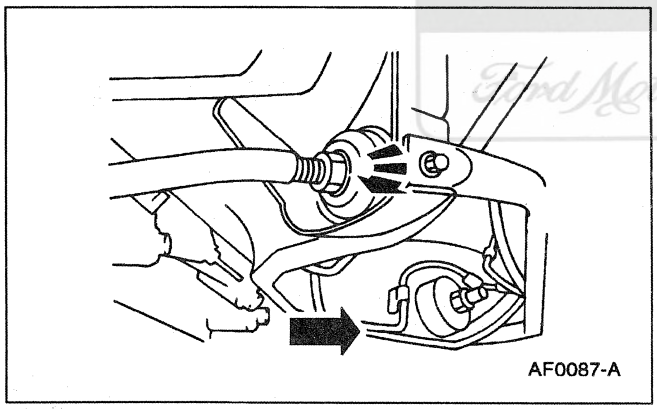

10. Return the large nut behind the sub-frame to the pre-marked position.

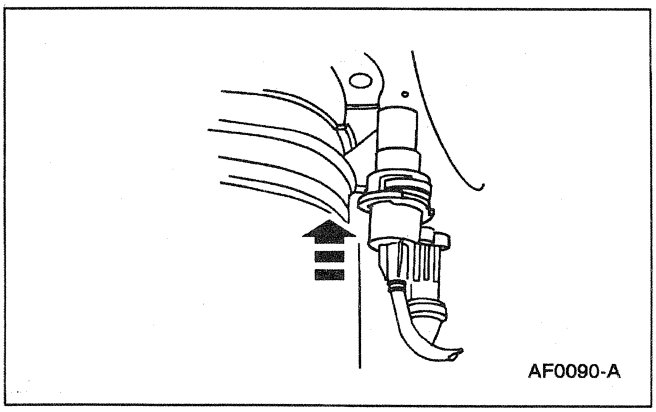

11. Install the solenoid valve (5311); refer to Section 204-05.

REMOVAL AND INSTALLATION (Continued)

12. Remove the safety wire from the spindle. Install the wheel and tire assembly; refer to Section 204-04.

13. Lower the vehicle, start the engine and turn the air suspension switch on.

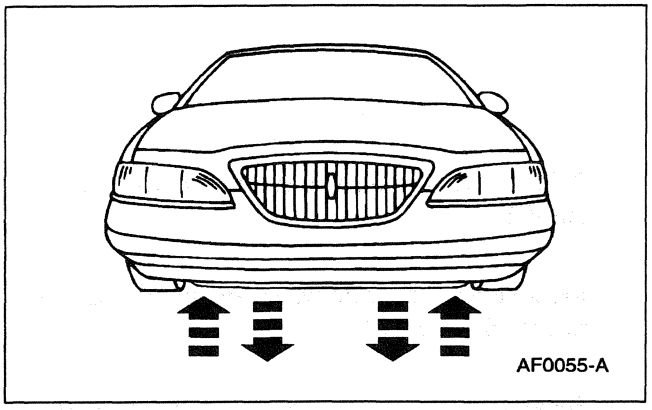

14. Push the front of the vehicle down, and release.

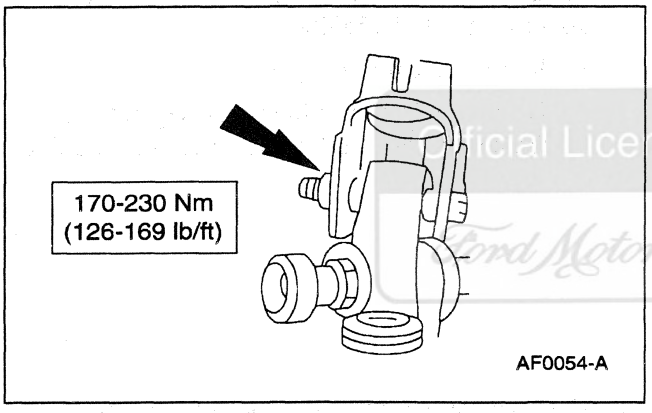

15. Tighten the front spring and shock to the front suspension lower arm nut and bolt.

Official Licensed Product
Ford Motor Company

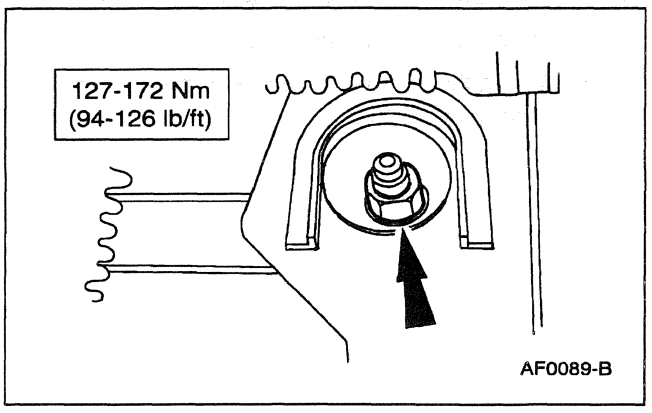

16. Align the camber marks at the pivot bolt and tighten the nut.

17. Check the wheel alignment; refer to Section 204-00.

REMOVAL AND INSTALLATION (Continued)

Bar and Link

Special Tool(s)

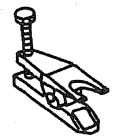 ST1115-A	Ball Joint Remover 204-D014 (D88L-3006-A) or Equivalent

1. Raise the vehicle on a hoist; refer to Section 100-02.

2. Remove both the front wheel and tire assemblies; refer to Section 204-04.

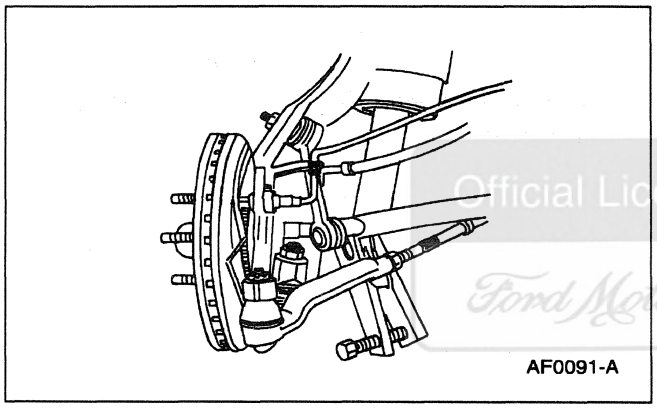
AF0091-A

3. Separate the front stabilizer bar (5482) from the stabilizer bar link (5K484).
   - Remove the retaining nut.
   - Using the Ball Joint Remover, separate the front stabilizer bar from the stabilizer bar link.

Official Licensed Parts
Ford Motor Company

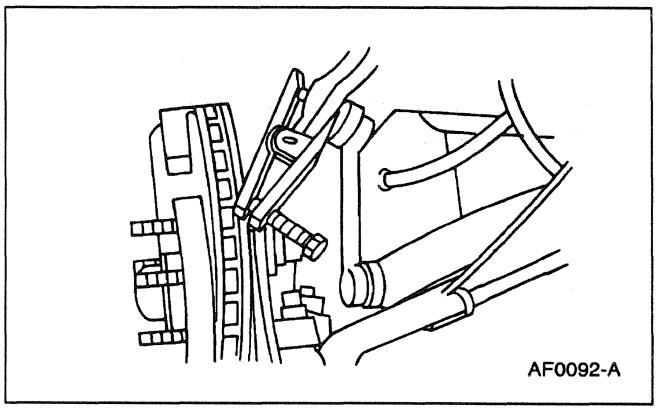
AF0092-A

4. Remove the stabilizer bar link from the spindle.
   - Remove the retaining nut.
   - Using the Ball Joint Remover, remove the stabilizer bar link.

REMOVAL AND INSTALLATION (Continued)

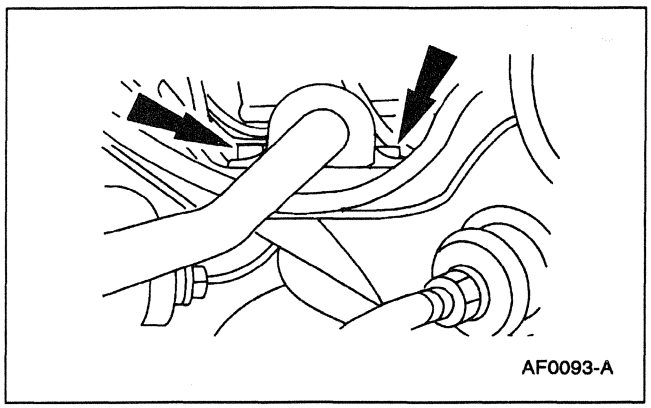

5. Remove the front stabilizer bar retaining bracket bolts and the stabilizer bar bracket (5486).

6. Repeat Steps 3, 4 and 5 on the other side.

7. Lower the sub-frame approximately 152 mm (6 inches); refer to Section 502-02.

8. Remove the front stabilizer bar through the left side wheel opening.

Installation

1. Follow the removal procedure in reverse order.

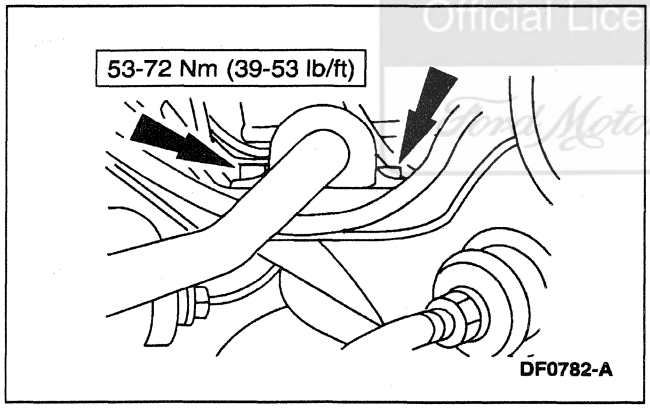

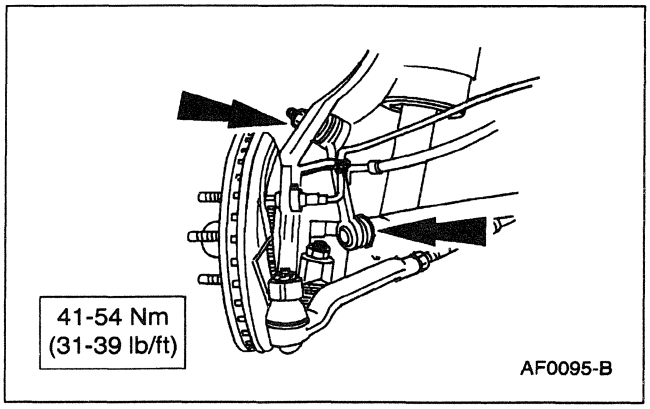

Official Licensed Product
Ford Motor Company

REMOVAL AND INSTALLATION (Continued)

Spindle

Special Tool(s)

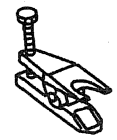 ST1115-A	Ball Joint Remover 204-D014 (D88L-3006-A) or Equivalent

1. Raise the vehicle on a hoist; refer to Section 100-02.

2. Remove the wheel and tire assembly; refer to Section 204-04.

3. **NOTE:** Mark the front disc brake rotor and the lug bolt so the front disc brake rotor can be installed in the same position.

   Remove the front disc brake caliper and the anchor plate, the disc brake rotor and the disc brake rotor shield. Support the disc brake caliper with wire; refer to Section 206-03.

Official Licensed Product
Ford Motor Company

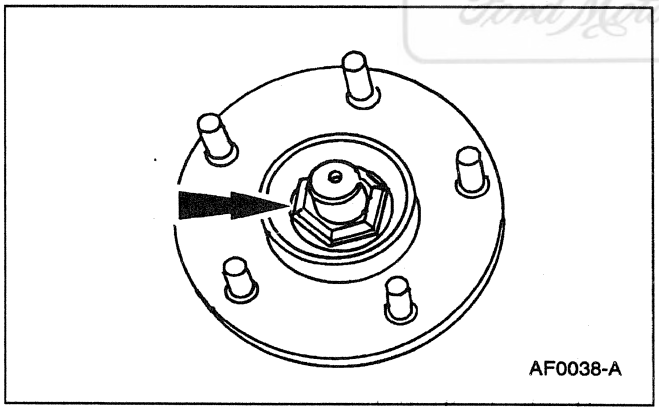
AF0038-A

4. Remove the wheel hub (1104).
   - Remove and discard the front hub cap grease seal (1N135).
   - Remove and discard the front axle wheel hub retainer (3B477).

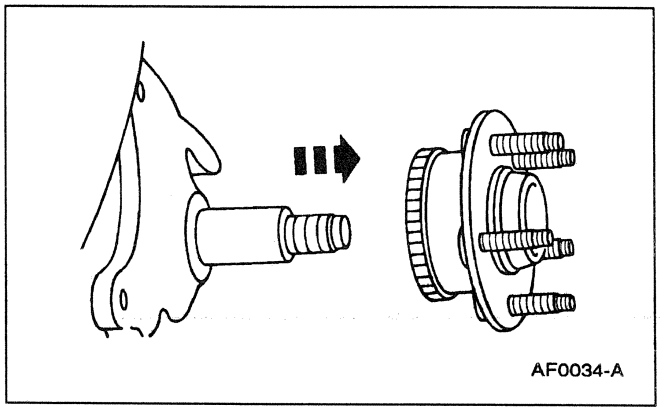
AF0034-A

5. Remove the wheel hub .

REMOVAL AND INSTALLATION (Continued)

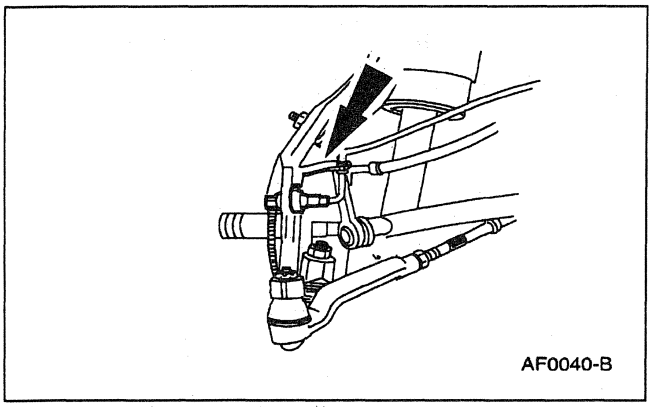

6. Remove the front brake anti-lock sensor (2C204) and position out of the way.

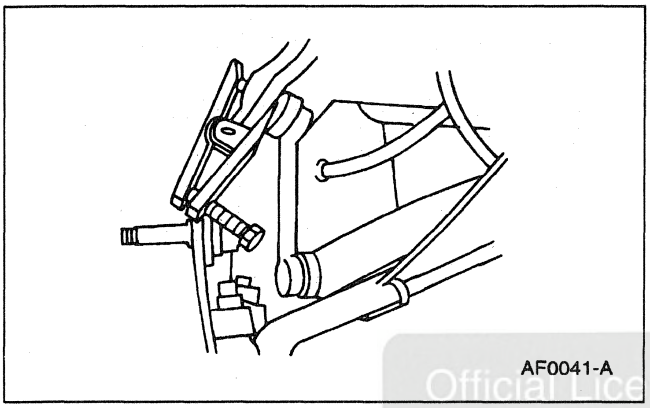

7. Disconnect the stabilizer bar link (5K484).
   - Remove the stabilizer bar link-to-front wheel spindle retaining nut.
   - Using the Ball Joint Remover, disconnect the stabilizer bar link from the front wheel spindle (3105).

Official Licensed Product
Ford Motor Company®

8. Separate the tie rod end (3A130) from the front wheel spindle ; refer to Spindle in this section.

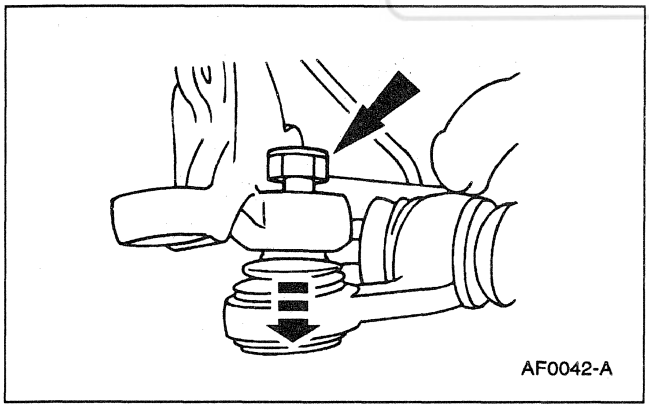

9. Separate the front suspension lower arm ball joint (3050) from the spindle.
   - Remove the ball joint to the spindle retaining nut.
   - While pulling down on the front suspension lower arm ball joint, rap the spindle with a hammer.

REMOVAL AND INSTALLATION (Continued)

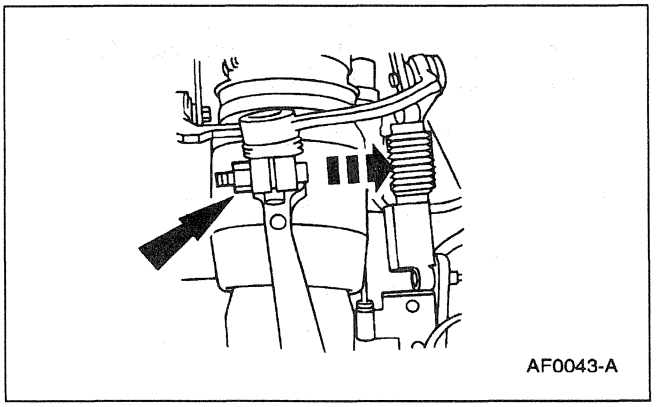

10. Remove and discard the upper spindle to front suspension arm bushing joint pinch bolt and nut.

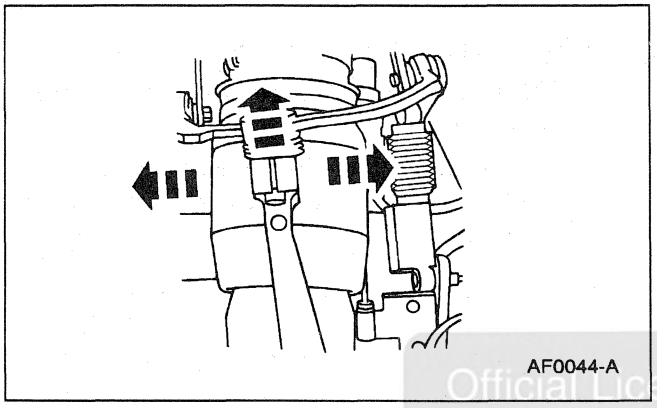

11. **NOTE:** Slightly spread the slot in the top of the spindle.

    Separate the front suspension arm bushing joint (3085) from the spindle and remove the front wheel spindle from the vehicle.

Official Licensed Product
Ford Motor Company

Installation

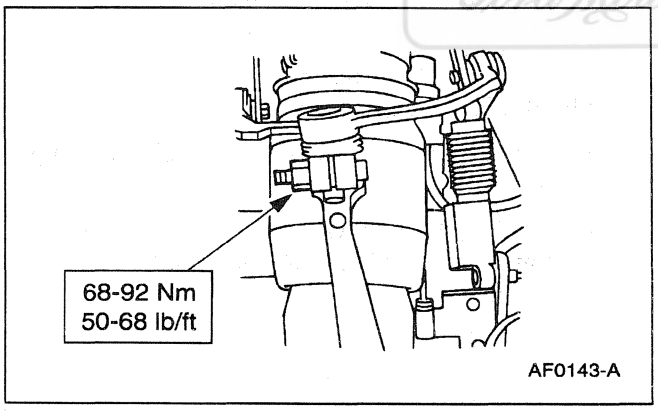

1. Follow the removal procedure in reverse order.

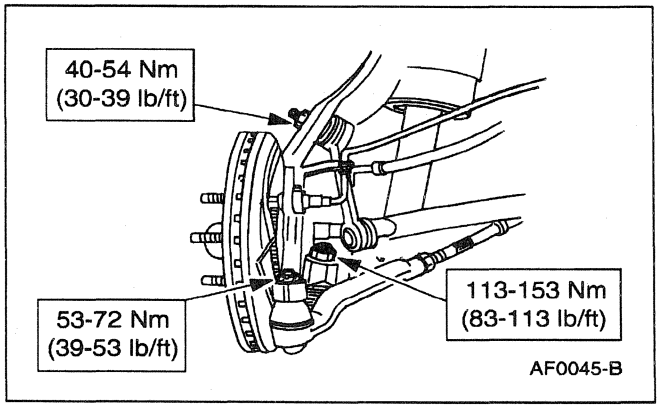

REMOVAL AND INSTALLATION (Continued)

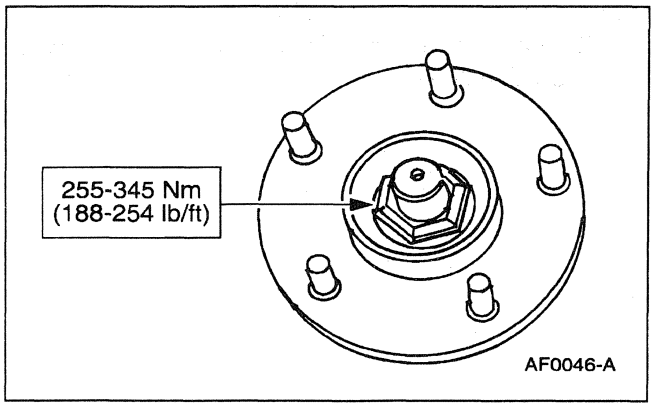

Spring and Shock Assembly

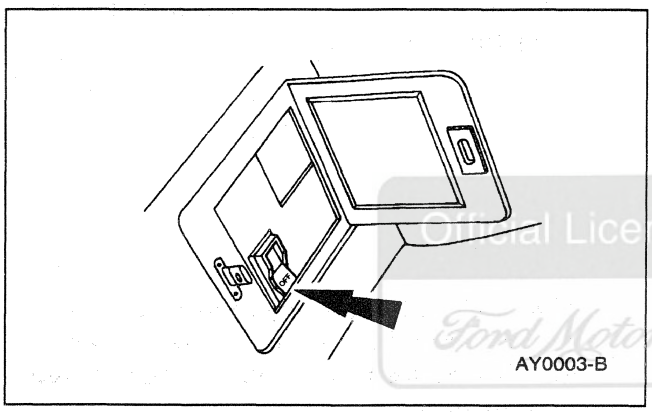

1. **WARNING: THE ELECTRICAL POWER TO THE AIR SUSPENSION SYSTEM MUST BE SHUT OFF PRIOR TO HOISTING, JACKING OR TOWING AN AIR SUSPENSION VEHICLE. THIS CAN BE ACCOMPLISHED BY TURNING OFF THE AIR SUSPENSION SERVICE SWITCH. FAILURE TO DO SO CAN RESULT IN UNEXPECTED INFLATION OR DEFLATION OF THE AIR SPRINGS, WHICH CAN RESULT IN SHIFTING OF THE VEHICLE DURING THESE OPERATIONS.**
   Turn the air suspension switch off.
2. Raise the vehicle on a hoist; refer to Section 100-02. The suspension must be fully suspended.
3. Remove the wheel and tire assembly; refer to Section 204-04.

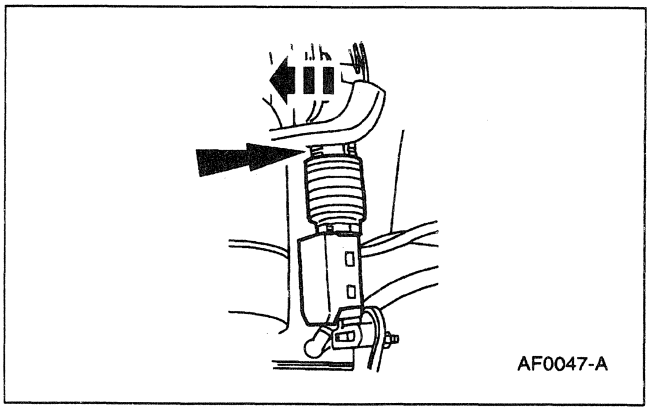

4. Position the air suspension height sensor (5359) out of the way.
   - Release the metal spring clip at the top mount of the height sensor.
   - Pop the height sensor off the ball stud.
   - Rotate the height sensor out of the way on the bottom mount.

Official Licensed Product
Ford Motor Company

REMOVAL AND INSTALLATION (Continued)

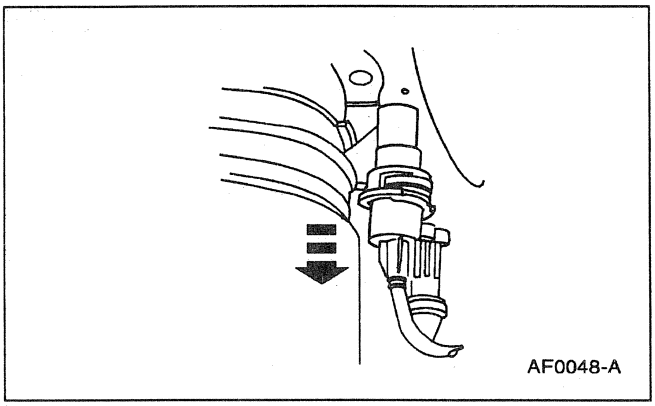

5. Remove the air spring solenoid valve (5311); refer to Section 204-05.

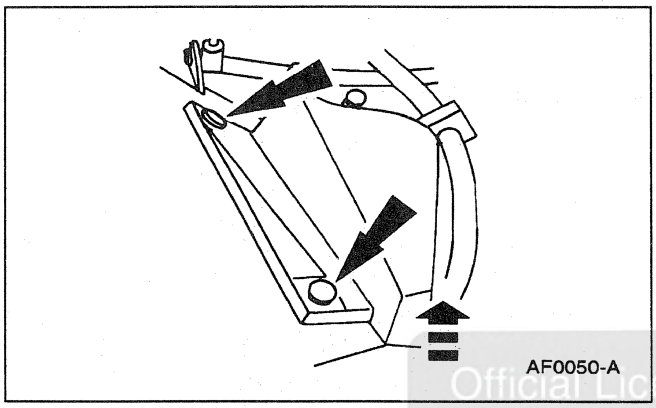

6. Remove the front shock absorber strut cover cup (18A179).
   - Remove the plastic push screws.
   - Remove the front shock absorber strut cover cup from the vehicle.

Official Licensed Product
Ford Motor Company

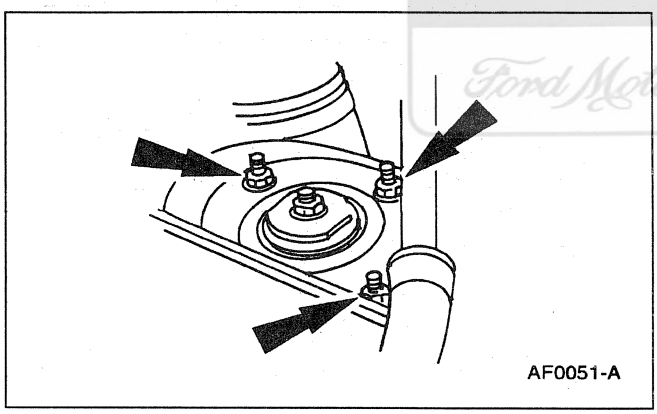

7. ⚠ **CAUTION: Do not remove the front shock absorber large center nut as this can result in a permanent air leak through the top of the air spring.**

   Remove the three air spring to shock tower retaining nuts and the shock absorber housing seal (18T003).

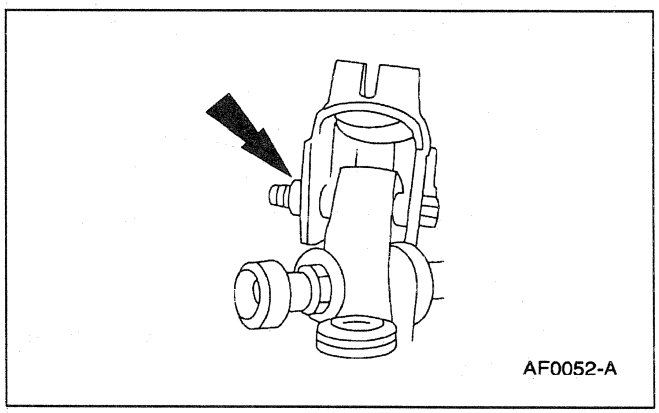

8. Remove the front spring and shock to front suspension lower arm nut and bolt.

REMOVAL AND INSTALLATION (Continued)

Installation

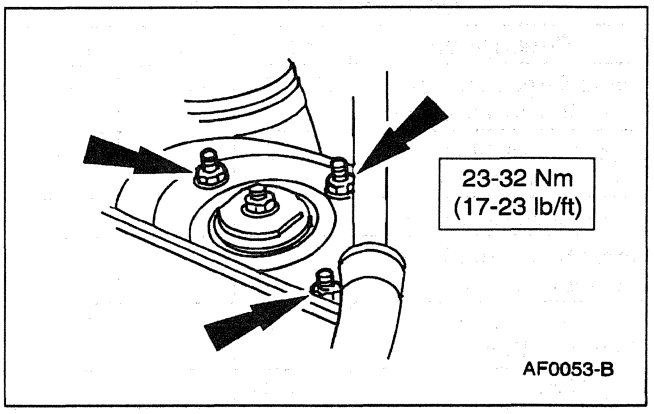

1. Follow the removal procedure in reverse order.

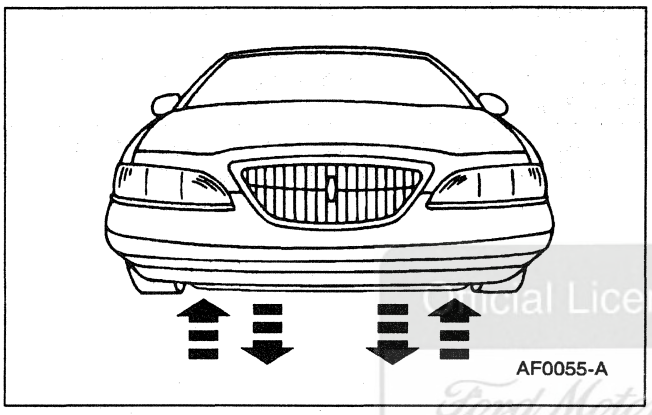

2. Jounce the vehicle several times.

Official Licensed Product
Ford Motor Company

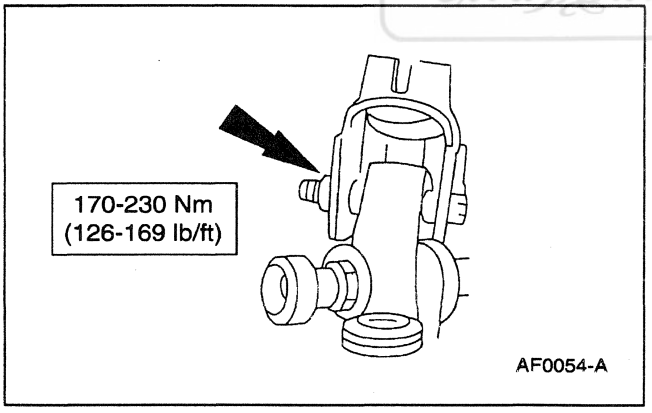

3. Tighten the lower mount nut and bolt to specification with the vehicle on the ground.

GENERAL PROCEDURES

Ride Height

Refer to Section 204-05.

Wheel Alignment

Refer to Section 204-00.

SPECIFICATIONS

Torque Specifications

Description	Nm	Lb/Ft	Lb/In
Lower Arm to Sub-Frame	127-172	94-127	—
Lower Arm to Spindle (Ball Joint) Nut	113-153	83-113	—
Lower Arm to Front Suspension Lower Arm Strut	113-153	83-113	—
Upper Arm to Body	88-119	65-88	—
Upper Arm to Spindle (Ball Joint)	68-92	50-68	—
Stabilizer Bar Link to Spindle	40-54	30-39	—
Stabilizer Bar Link to Stabilizer Bar	40-54	30-40	—
Stabilizer Bar Bracket	53-72	39-53	—
Shock Absorber-to-Front Suspension Lower Arm Nut	170-230	125-170	—

(Continued)

Torque Specifications

Description	Nm	Lb/Ft	Lb/In
Front Suspension Lower Arm Strut to Sub-Frame	113-153	83-113	—
Upper Shock Mount to Body Attachment Nuts	23-32	17-23	—
Tie Rod End to Spindle	53-72[a]	39-53[a]	—
Front Brake Anti-Lock Sensor Bolt	4.6-6.8	—	41-60
Brake Hose Bracket Retaining Bolt	11-16	—	98-141
Lug Nuts	115-142	85-105	—
Front Axle Wheel Hub Retainer	255-345	188-254	—
Brake Caliper/Anchor Plate Bolts	83-119	61-88	—

a Tighten to minimum torque, then continue to tighten until aligned to nearest cotter pin slot.

Official Licensed Product
Ford Motor Company

SECTION 204-02 Rear Suspension

VEHICLE APPLICATION: Mark VIII

SUBJECT **PAGE**

DESCRIPTION AND OPERATION
- Rear Suspension 204-02-2
  - Air Suspension System 204-02-3
  - Rear Spring 204-02-2
  - Rear Suspension Arm and Bushings 204-02-2
  - Rear Suspension Compensator Link 204-02-2
  - Shock Absorbers 204-02-3
  - Stabilizer Bar 204-02-3
  - Sub Frame 204-02-3
  - Suspension Fasteners 204-02-3

DIAGNOSIS AND TESTING
- Rear Suspension 204-02-3

REMOVAL AND INSTALLATION
- Arm — Lower 204-02-10
- Arm — Upper 204-02-7
- Hub 204-02-3
- Knuckle 204-02-17
- Lug Bolts 204-02-3
- Shock Absorber 204-02-23

SPECIFICATIONS 204-02-25

Official Licensed Product
Ford Motor Company

DESCRIPTION AND OPERATION

Rear Suspension

Rear Suspension Components

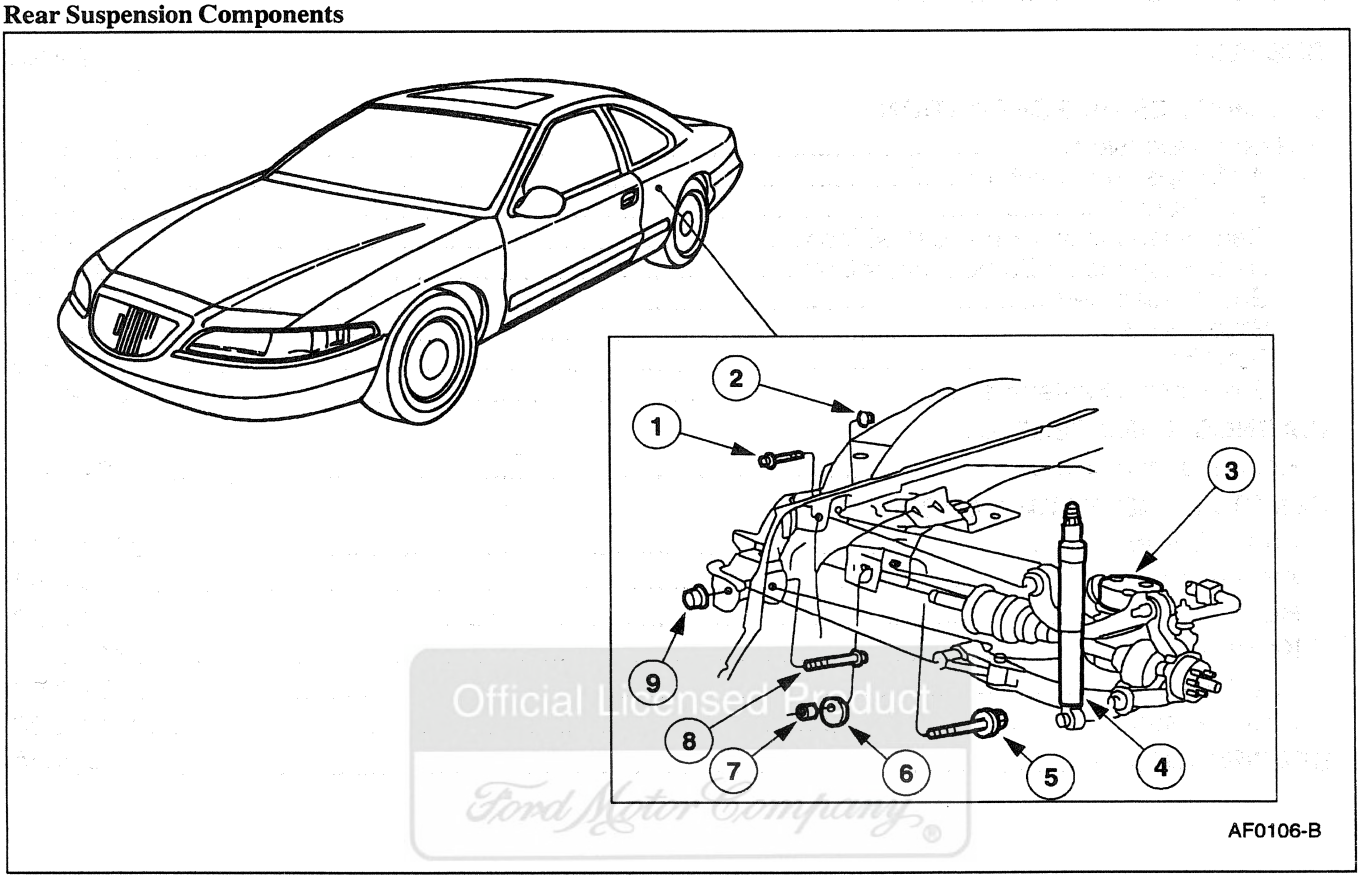

Official Licensed Product
Ford Motor Company

Item	Part Number	Description
1	N805678-S160	Bolt (2 Req'd)
2	N807144-S560	Nut (2 Req'd)
3	5560	Rear Spring
4	18125	Rear Shock Absorber
5	5K750	Rear Suspension Arm Adjusting Cam Bolt (2 Req'd)

(Continued)

Item	Part Number	Description
6	—	Cam (2 Req'd) (Part of 5K750)
7	N806082-S427	Nut (2 Req'd)
8	N805467-S160	Bolt (2 Req'd)
9	N805464-S161	Nut with Cover (2 Req'd)

Rear Suspension Arm and Bushings

The rear suspension arm and bushings (5500) compensate for rotational torque placed on the rear axle during acceleration and braking by preventing the rear axle and rear spring from twisting (winding up).

The rear suspension arm and bushing minimize noise and vibration issues caused by excessive pinion-to-driveshaft angles during acceleration and braking.

Rear Suspension Compensator Link

The rear suspension compensator link (5A972) controls toe-out during braking.

Rear Spring

Air rear springs (5560) are used for the rear suspension. For more information regarding the air springs, refer to Section 204-05.

DESCRIPTION AND OPERATION (Continued)

Shock Absorbers

The rear shock absorbers (18125) provide the necessary suspension dampening control.

Stabilizer Bar

The rear stabilizer bar (5A772) transmits forces to control vehicle roll during cornering.

Sub Frame

The rear suspension system is fully independent and mounted on a rubber-isolated rear sub-frame (5R003) .

Suspension Fasteners

These fasteners are important parts that can affect the performance of vital components and systems and result in major vehicle damage. New fasteners must be installed if the old fasteners are loosened or removed. They must be replaced with the same part number or an equivalent part if replacement is necessary. Do not use a replacement part of lesser quality or substitute design. The specified torque value must be used during assembly to ensure proper part retention.

Air Suspension System

The air suspension system is designed to improve ride, handling and general vehicle performance for static, on-road and off-road driving conditions. For more information regarding the air suspension system, refer to Section 204-05.

DIAGNOSIS AND TESTING

Rear Suspension

For ride and handling concerns, refer to Section 204-00. For load leveling control suspension concerns, refer to Section 204-05.

Official Licensed Product
Ford Motor Company

REMOVAL AND INSTALLATION

Hub

1. Refer to Knuckle in this section.

Lug Bolts

Special Tool(s)

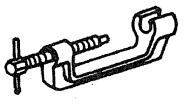 ST1494-A	C-Frame and Clamp Assembly 211-023 (T74P-3044-A1)

REMOVAL AND INSTALLATION (Continued)

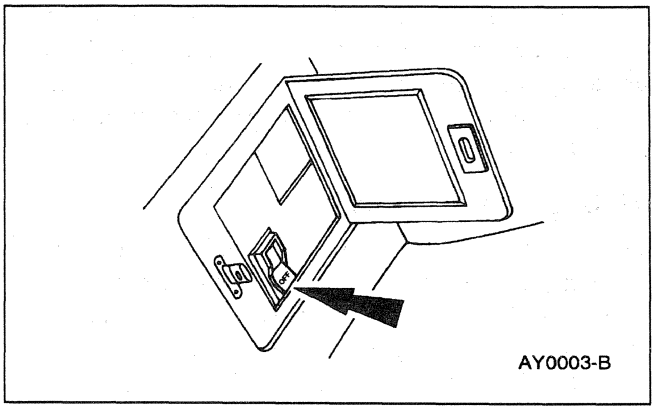

Removal

⚠ **CAUTION: Never use a hammer to remove the lug bolt. Damage to the axle flange, hub flange, wheel bearing or hub bearing can result.**

1. ⚠ **WARNING: THE ELECTRICAL POWER TO THE AIR SUSPENSION SYSTEM MUST BE TURNED OFF PRIOR TO HOISTING, JACKING OR TOWING AN AIR SUSPENSION VEHICLE. FAILURE TO DO SO CAN RESULT IN UNEXPECTED INFLATION OR DEFLATION OF THE AIR SPRINGS OR SHOCKS WHICH CAN RESULT IN SHIFTING OF THE VEHICLE DURING THESE OPERATIONS.**
   Turn the air suspension service switch off, if so equipped.

2. Raise the vehicle and install safety stands; refer to Section 100-02.

3. Remove the wheel and tire assembly; refer to Section 204-04.

4. Remove the rear disc brake caliper (2552) , rear disc support bracket (2B511) and rear disc brake rotor (2C026) if so equipped; refer to Section 206-04. Support the rear disc brake caliper with safety wire. If drum brake, proceed to Step 5.

5. Remove the rear brake drum.

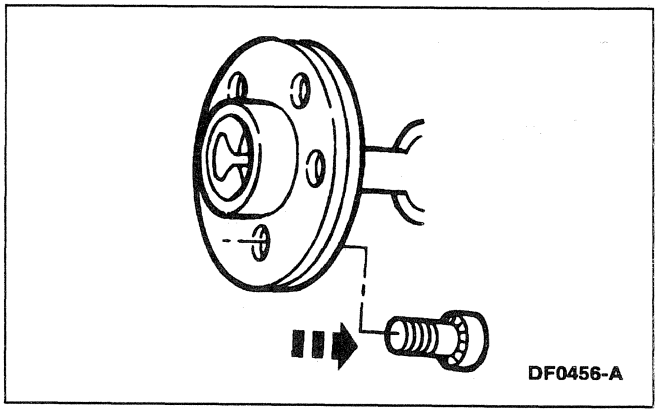

6. Using the C-Frame and Clamp Assembly Tool, press the lug bolt from its seat and discard.

Official Licensed Product
Ford Motor Company

REMOVAL AND INSTALLATION (Continued)

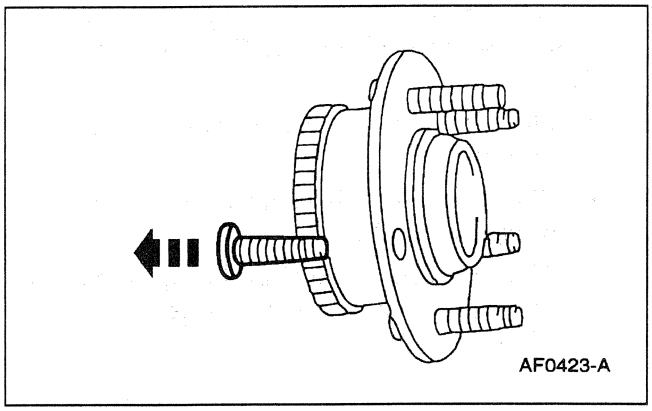

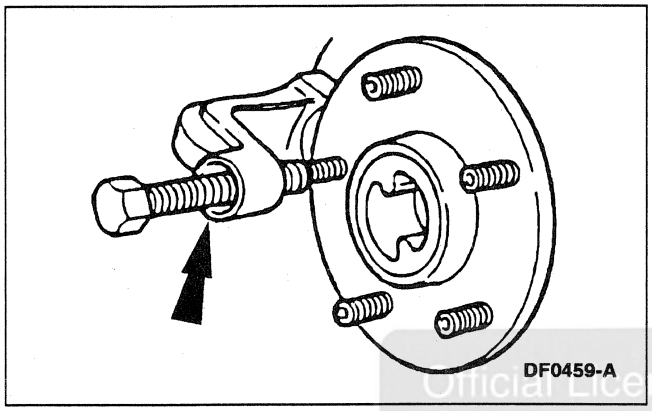

Official Licensed Product
Ford Motor Company

Installation

⚠ **CAUTION: Never use air tools to install lug bolts. The serrations can be stripped from the stud.**

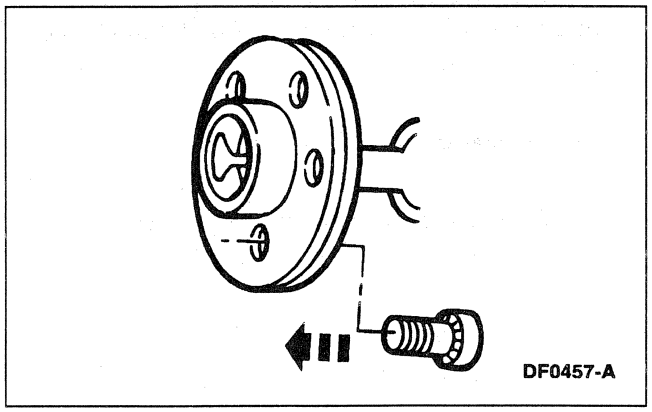

1. Insert a new lug bolt in the hole in the axle flange or hub flange, making sure the serrations are aligned with those made by the original lug bolt.

REMOVAL AND INSTALLATION (Continued)

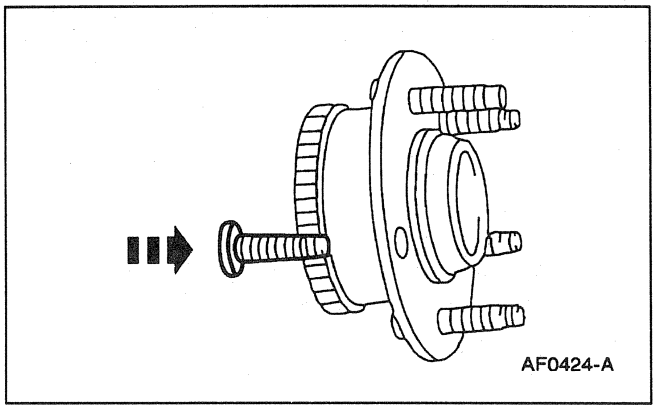

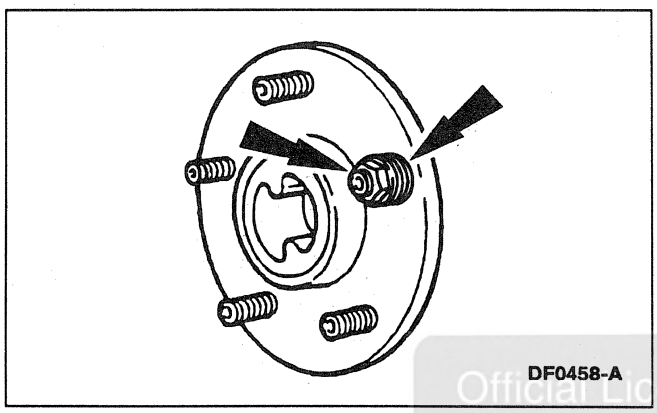

2. Seat a new lug bolt in the axle flange or hub flange.
   - Place four flatwashers over the outside end of the lug bolt.
   - Thread a standard lug nut with the flat side against the washers.
   - Tighten the lug nut until the lug bolt head seats against the back side of the flange.

Official Licensed Product
Ford Motor Company

3. Remove the lug nut and flatwashers.
4. Install the rear disc brake rotor , rear disc support bracket and the rear disc brake caliper , if so equipped; refer to Section 206-04. If drum brake, proceed to Step 5.
5. Install the rear brake drum.
6. Install the wheel and tire assembly; refer to Section 204-04.
7. Lower the vehicle.

REMOVAL AND INSTALLATION (Continued)

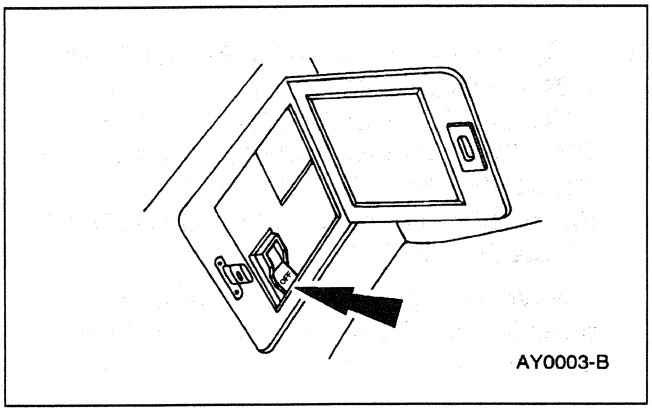

8. Turn the air suspension service switch on, if so equipped.

Arm — Upper

Removal

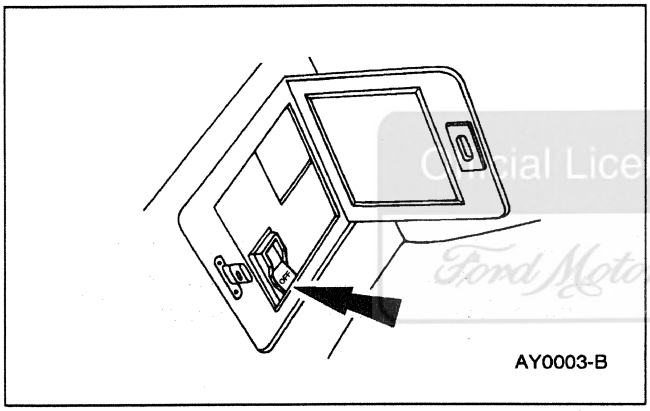

1. **WARNING: THE ELECTRICAL POWER TO THE AIR SUSPENSION SYSTEM MUST BE TURNED OFF PRIOR TO HOISTING, JACKING OR TOWING AN AIR SUSPENSION VEHICLE . FAILURE TO DO SO CAN RESULT IN UNEXPECTED INFLATION OR DEFLATION OF THE AIR SPRINGS OR SHOCKS WHICH CAN RESULT IN SHIFTING OF THE VEHICLE DURING THESE OPERATIONS.**
   Turn the air suspension service switch off, if so equipped.

2. Raise the vehicle and install safety stands; refer to Section 100-02.

3. Remove the wheel and tire assembly; refer to Section 204-04.

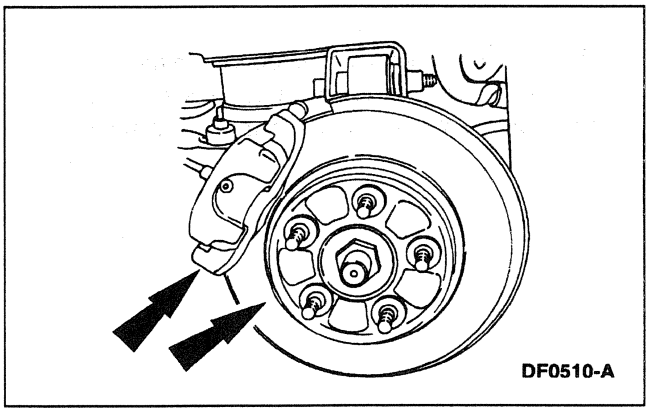

4. Remove the rear disc brake caliper (2552) and rear disc brake rotor (2C026) ; refer to Section 206-04.

REMOVAL AND INSTALLATION (Continued)

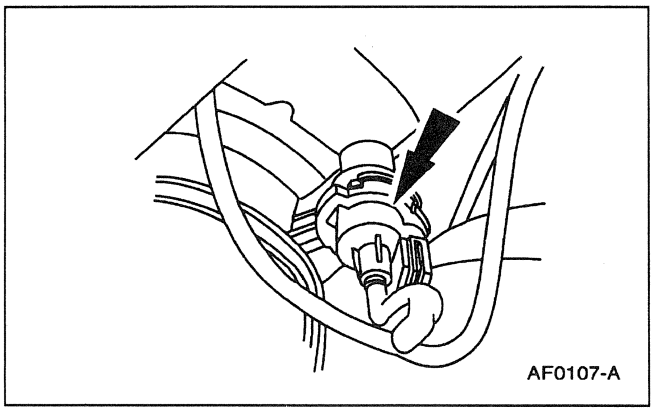

5. **WARNING: DO NOT REMOVE AN AIR SPRING UNDER ANY CIRCUMSTANCES WHEN THERE IS PRESSURE IN THE AIR SPRING. DO NOT REMOVE ANY COMPONENTS SUPPORTING AN AIR SPRING WITHOUT EXHAUSTING THE AIR.**

   Release the air pressure from the air spring by removing the solenoid valve (5311) ; refer to Section 204-05.

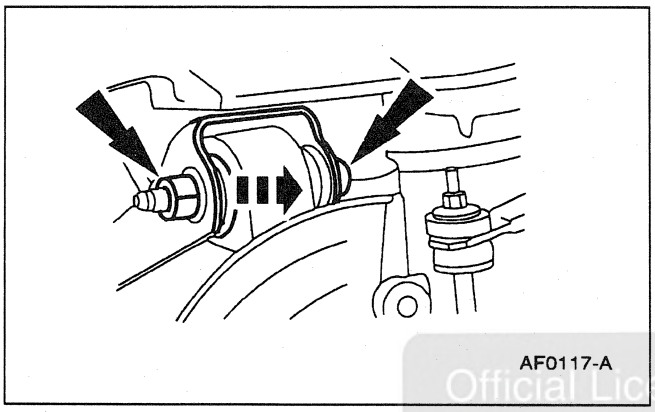

6. Remove the upper rear suspension arm and bushing-to-rear wheel knuckle nut and bolt.

Official Licensed Product
Ford Motor Company

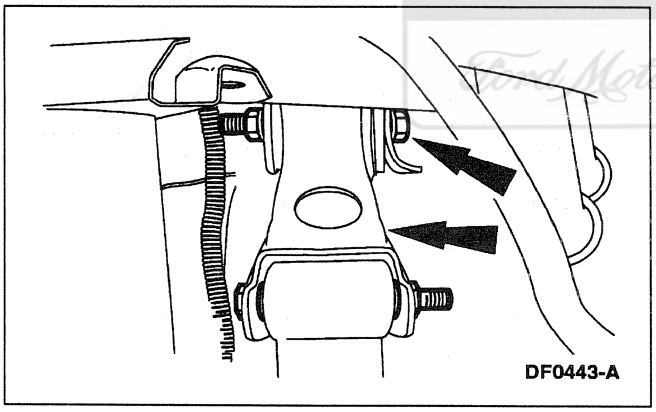

7. Remove the upper rear suspension arm and bushing-to-rear sub-frame nut and bolt, and remove the rear upper suspension arm.

Installation

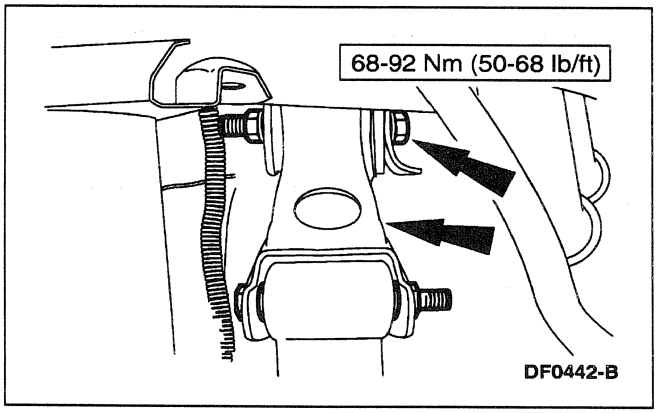

1. Position the upper suspension arm in the rear sub-frame, and install the upper rear suspension arm and bushing-to-rear sub-frame nut and bolt.

REMOVAL AND INSTALLATION (Continued)

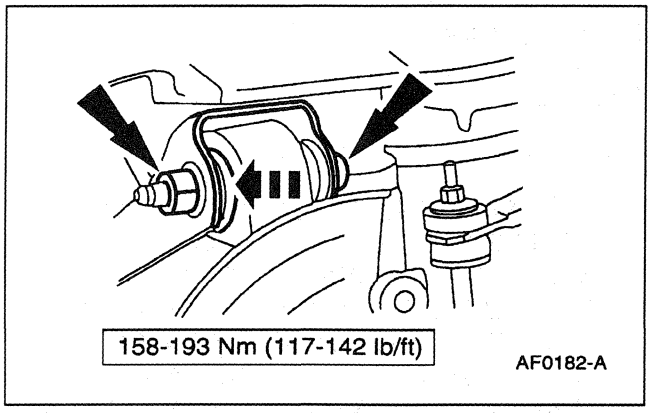

2. Install the upper rear suspension arm and bushing-to-rear wheel knuckle nut and bolt.

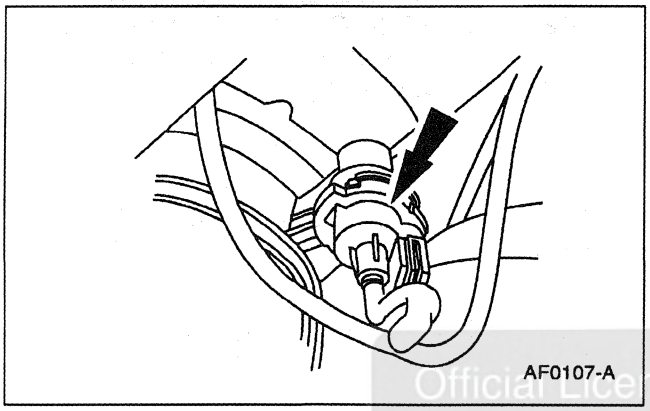

3. Install the solenoid valve ; refer to Section 204-05.

Official Licensed Product
Ford Motor Company

4. Install the rear disc brake caliper and rear disc brake rotor ; refer to Section 206-04.

5. Install the wheel and tire assembly; refer to Section 204-04.

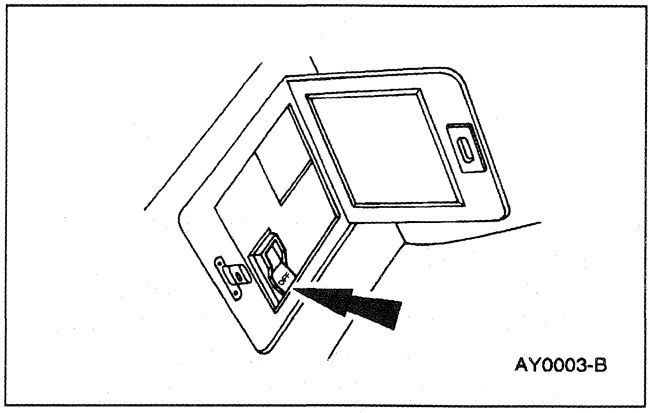

6. Turn on the air suspension service switch.

REMOVAL AND INSTALLATION (Continued)

Arm — Lower

Removal

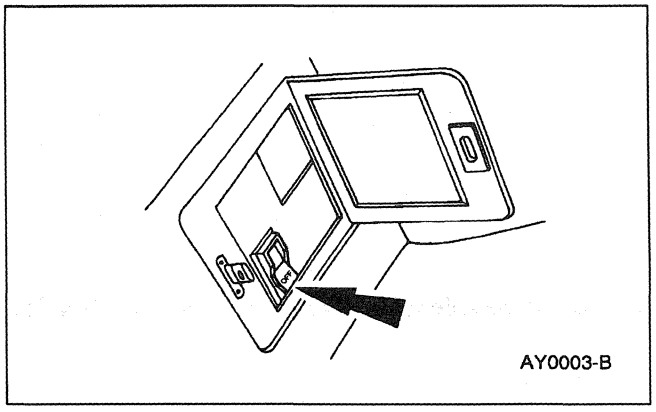
AY0003-B

1. **WARNING: THE ELECTRICAL POWER TO THE AIR SUSPENSION SYSTEM MUST BE TURNED OFF PRIOR TO HOISTING, JACKING OR TOWING AN AIR SUSPENSION VEHICLE. FAILURE TO DO SO CAN RESULT IN UNEXPECTED INFLATION OR DEFLATION OF THE AIR SPRINGS WHICH CAN RESULT IN SHIFTING OF THE VEHICLE DURING THESE OPERATIONS.**
   Turn off the air suspension service switch.

2. Raise the vehicle on a hoist; refer to Section 100-02.

3. Remove the wheel and tire assembly; refer to Section 204-04.

Official Licensed Product
Ford Motor Company

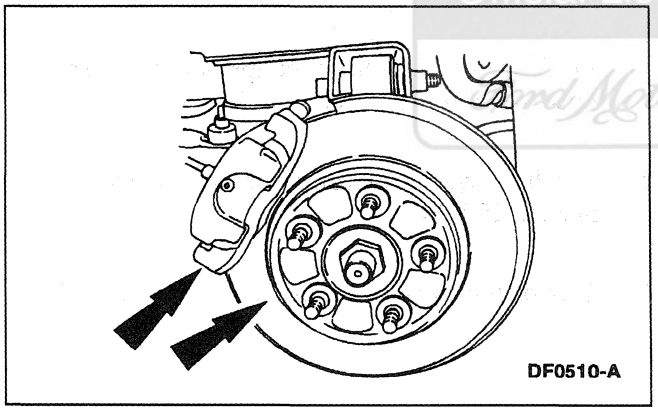
DF0510-A

4. Remove the rear disc brake caliper (2552) and rear disc brake rotor (2C026) ; refer to Section 206-04.

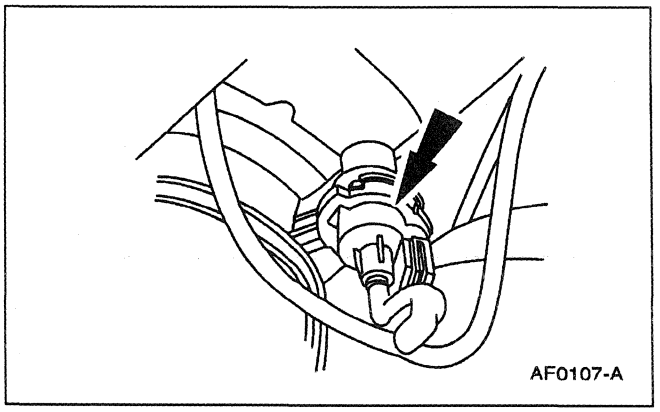
AF0107-A

5. **WARNING: DO NOT REMOVE AN AIR SPRING UNDER ANY CIRCUMSTANCES WHEN THERE IS PRESSURE IN THE AIR SPRING. DO NOT REMOVE ANY COMPONENTS SUPPORTING AN AIR SPRING WITHOUT EXHAUSTING THE AIR.**
   Release the air pressure from the air spring by removing the solenoid valve (5311) ; refer to Section 204-05.

REMOVAL AND INSTALLATION (Continued)

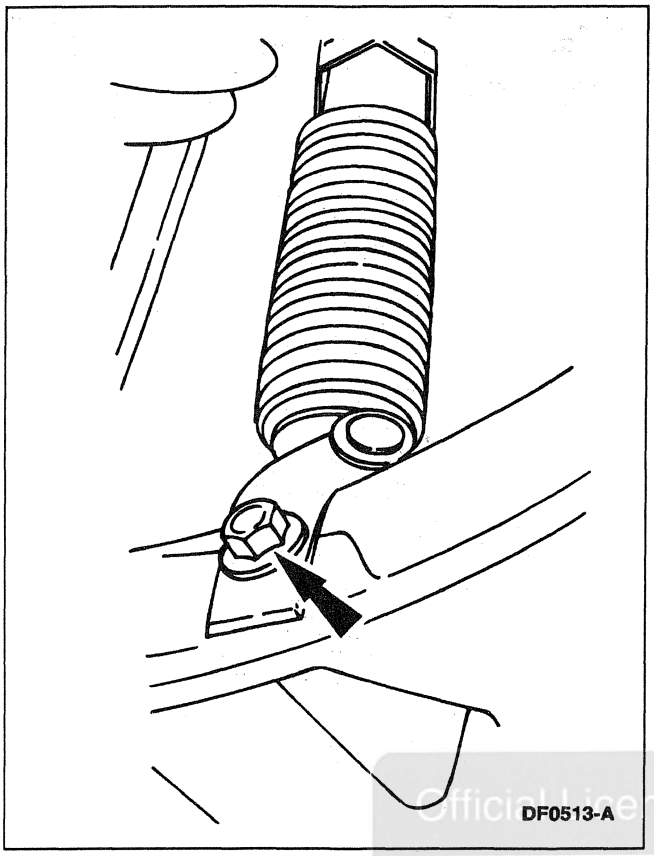

6. Remove the air suspension height sensor (5359) .

Official Licensed Product
Ford Motor Company

7. Separate the air spring from the rear suspension arm and bushing; refer to Section 204-05.

8. Remove the shock absorber; refer to Shock Absorber in this section.

9. Remove the rear wheel knuckle and hub assembly; refer to Knuckle in this section.

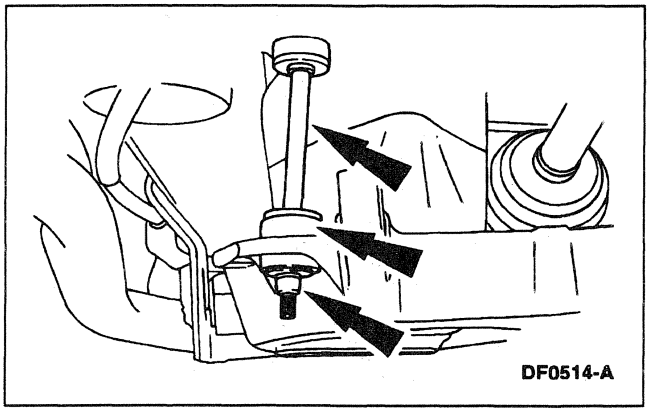

10. Remove the sway bar link nut, washer and bushing, and remove the link.

REMOVAL AND INSTALLATION (Continued)

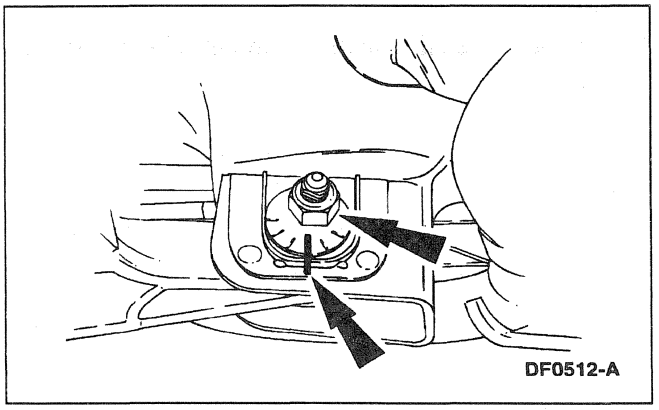

11. Mark the position of the front and rear cam bolts, and the subframe.

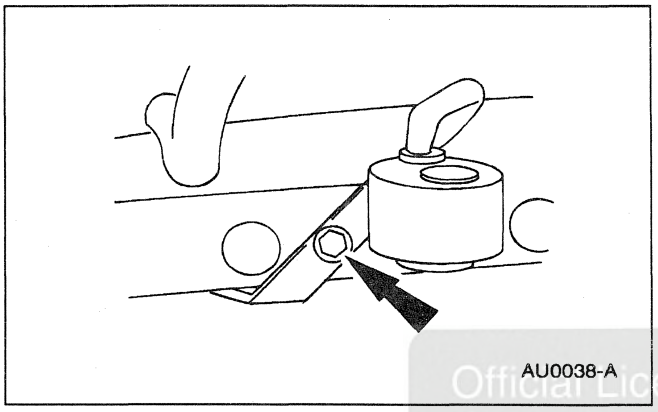

12. Remove the exhaust hanger bracket bolt, and position the exhaust system for clearance of the rear lower arm cam bolt.

Official Licensed Product
Ford Motor Company

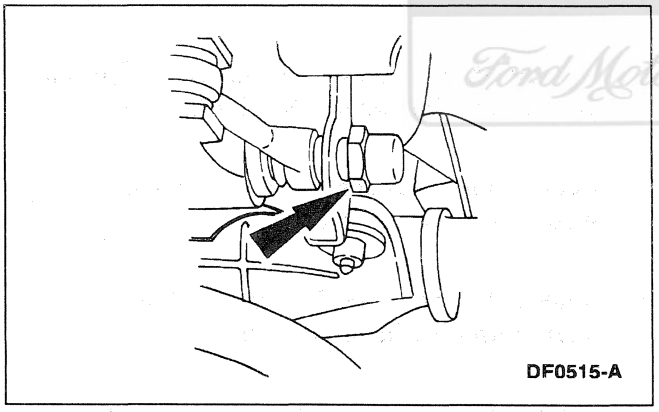

13. Remove the front lower arm cam bolt and nut.

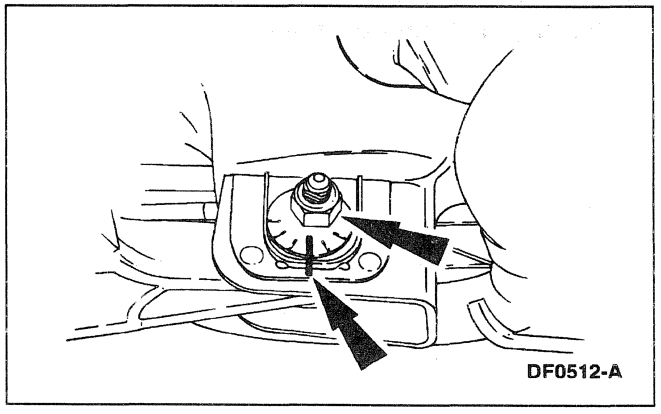

14. Remove the rear lower arm cam bolt and nut, and remove the lower arm.

REMOVAL AND INSTALLATION (Continued)

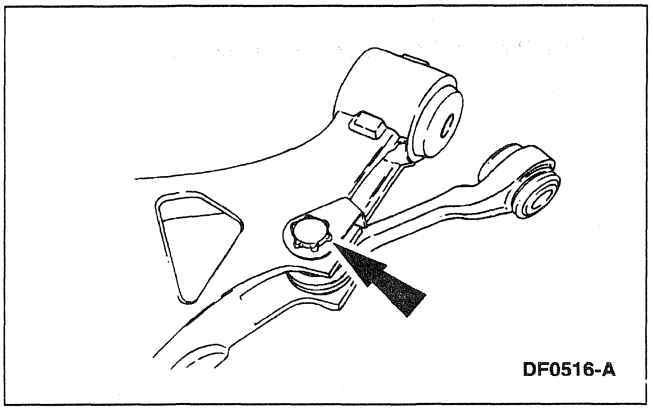

15. Remove the lower arm suspension compensator link.

Installation

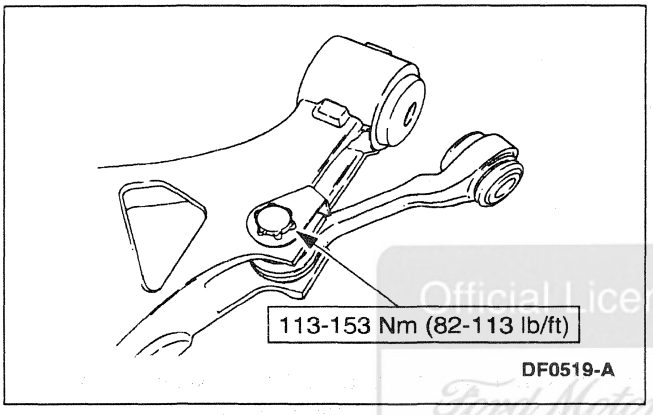

1. Install the lower arm suspension compensator link.

Official Licensed Product
Ford Motor Company

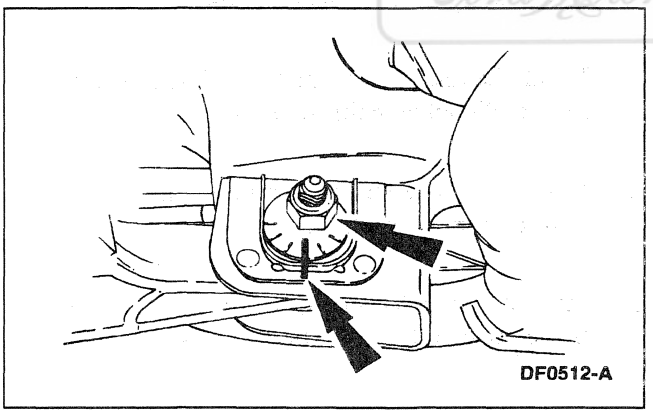

2. Position the lower arm in vehicle, and install the rear cam bolt and nut hand-tight, aligning the marks on the sub-frame and the cam bolt.

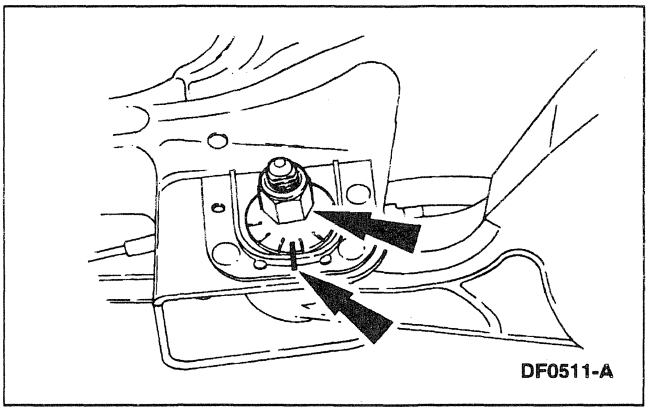

3. Install the front lower arm cam bolt and nut hand-tight, aligning the marks on the sub-frame and the cam bolt.

REMOVAL AND INSTALLATION (Continued)

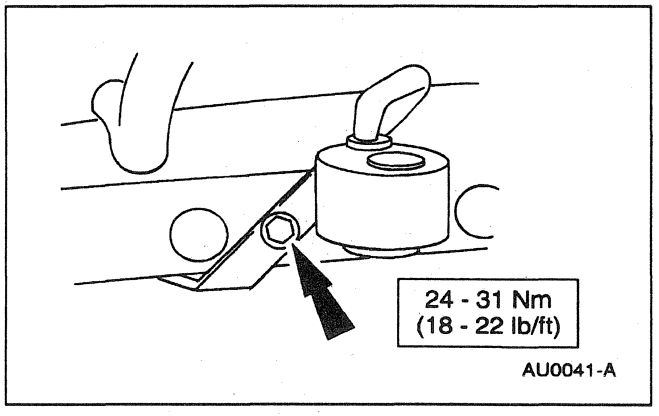

4. Install the exhaust hanger bracket bolt.

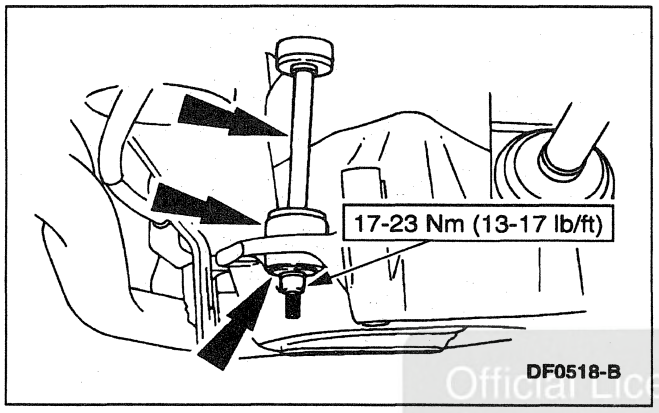

5. Install the stabilizer bar link, bushing, washer and nut.

Official Licensed Product
Ford Motor Company

6. Position the air spring in the rear suspension arm and bushing; refer to Section 204-05.

7. Install the rear wheel knuckle and hub assembly; refer to Knuckle in this section.

8. Install the shock absorber; refer to Shock Absorber in this section.

9. Install the rear disc brake caliper and rear disc brake rotor ; refer to Section 206-04.

REMOVAL AND INSTALLATION (Continued)

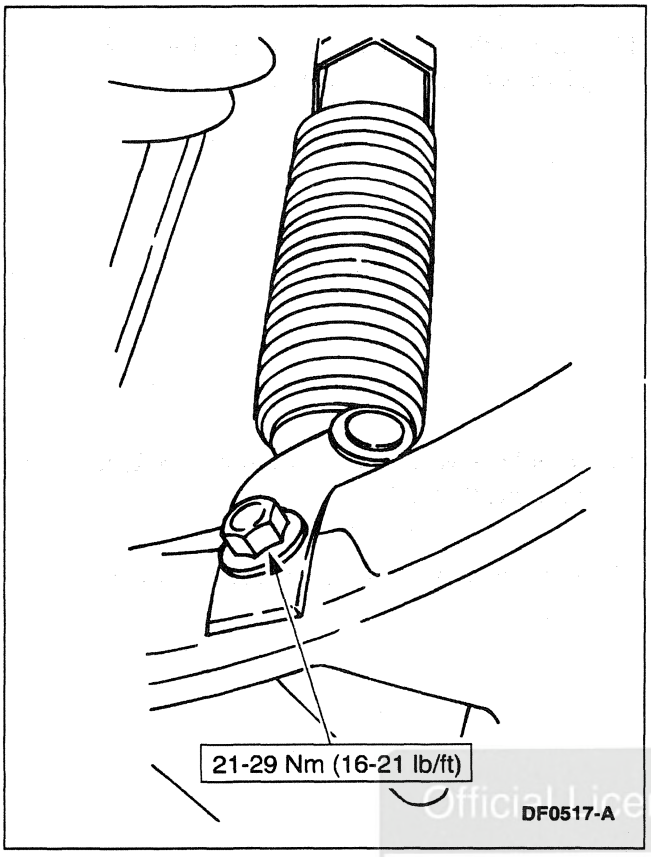

10. Install the air suspension height sensor .

Official Licensed Product
Ford Motor Company®

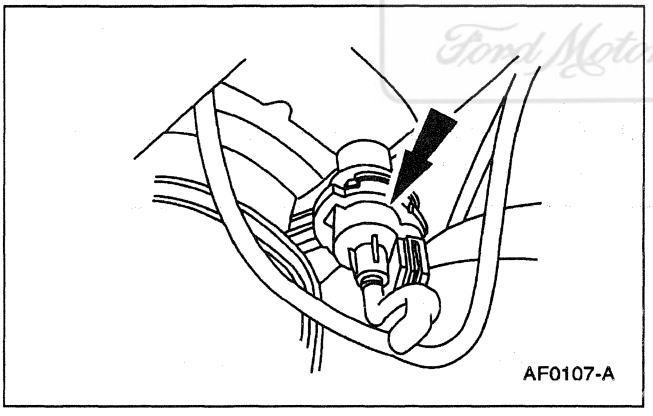

11. Install the solenoid valve ; refer to Section 204-05.

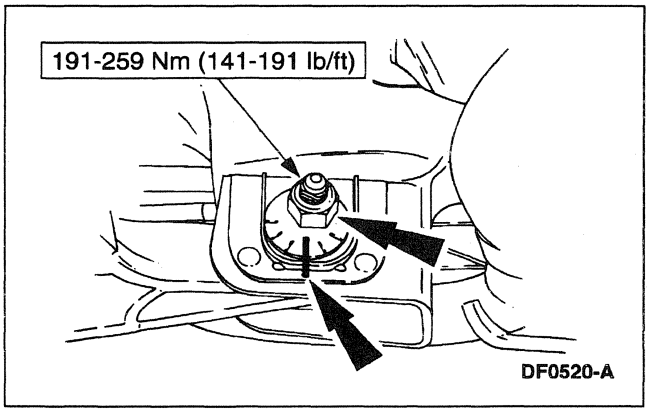

12. Tighten the rear cam bolt to specification with the alignment marks in position.

REMOVAL AND INSTALLATION (Continued)

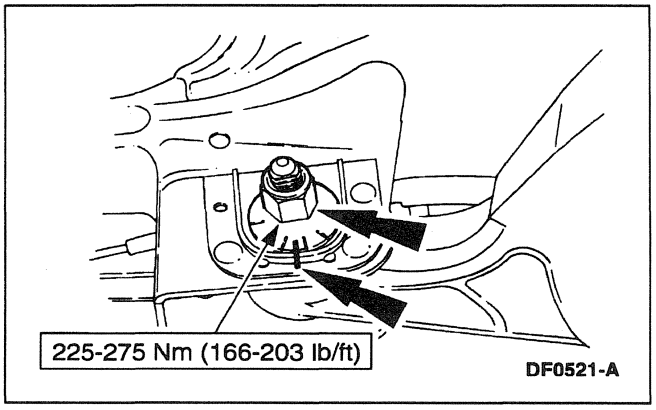

13. Tighten the front cam bolt to specification with the alignment marks in position.

14. Install the wheel and tire assembly; refer to Section 204-04.

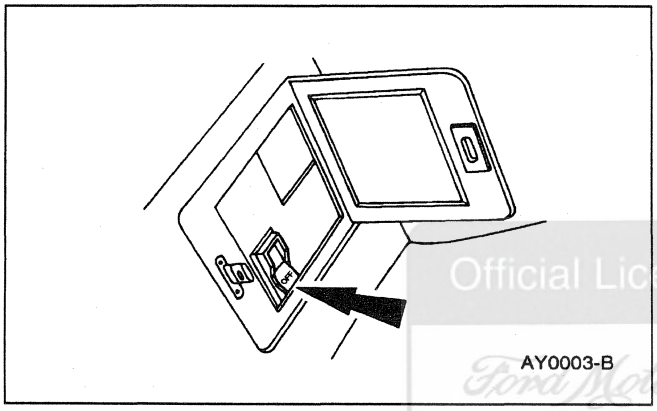

15. Turn on the air suspension service switch.

Official Licensed Product
Ford Motor Company

16. Check and adjust camber and toe if necessary; refer to Section 204-00.

REMOVAL AND INSTALLATION (Continued)

Knuckle

Special Tool(s)

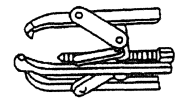 ST1184-A	2-3 Jaw Puller 205-D027 (D80L-1013-A) or Equivalent
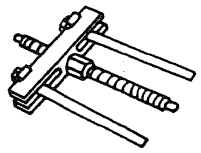 ST1516-A	Hub Remover/Replacer 204-069 (T81P-1104-C)
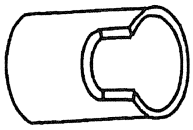 ST1124-A	Hub Support 205-286 (T89P-1104-A)

Special Tool(s)

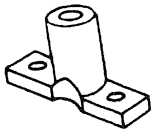 ST1517-A	Metric Hub Remover Adapter 205-237 (T86P-1104-A1)
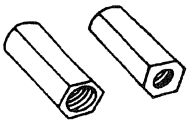 ST1518-A	Metric Hub Remover Adapters 204-085 (T83P-1104-BH)1
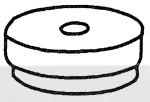 ST1123-A	Step Plate Adapter 205-D016 (D80L-630-5) or Equivalent

(Continued)

Official Licensed Product
Ford Motor Company

Removal

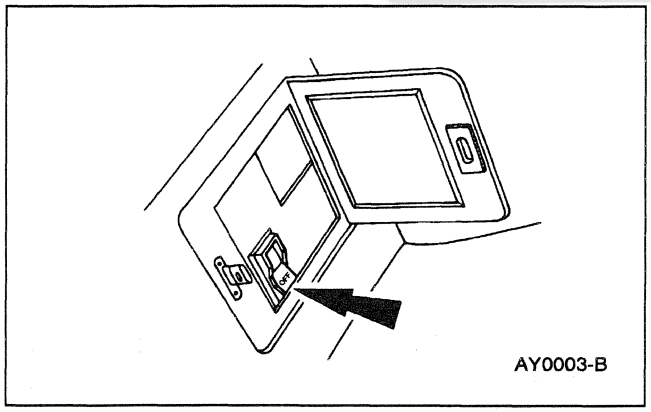

1. Turn the air suspension service switch off.
2. Raise the vehicle on a hoist; refer to Section 100-02.
3. Remove the wheel and tire assembly; refer to Section 204-04.
4. Remove and discard the rear axle wheel hub retainer (4B477) .

REMOVAL AND INSTALLATION (Continued)

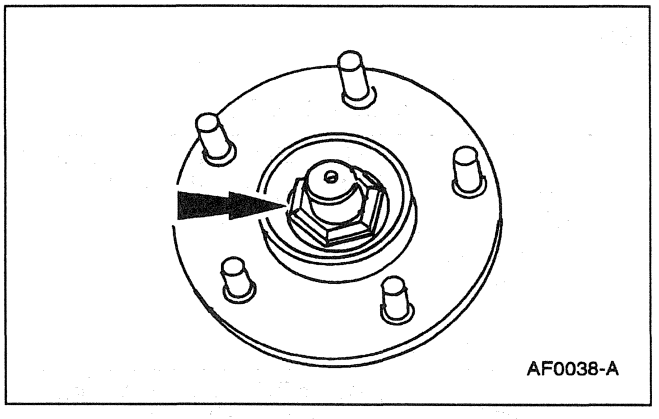

5. Remove the rear disc brake caliper (2552) , rear disc support bracket (2B511) and rear disc brake rotor (2C026) ; refer to Section 206-04. Support the rear disc brake caliper with safety wire.

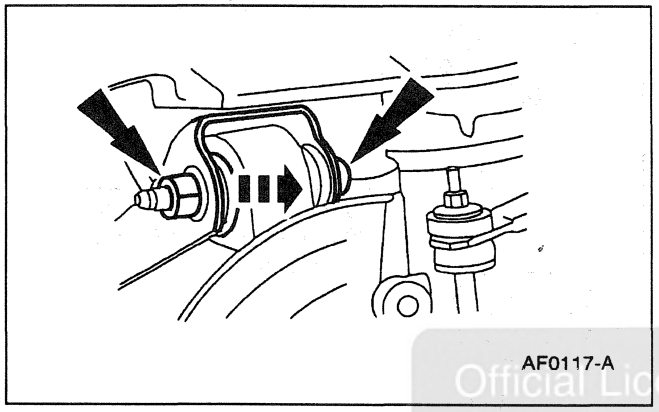

6. Remove the upper rear suspension arm and bushing-to-rear wheel knuckle nut and bolt.

Official Licensed Product
Ford Motor Company

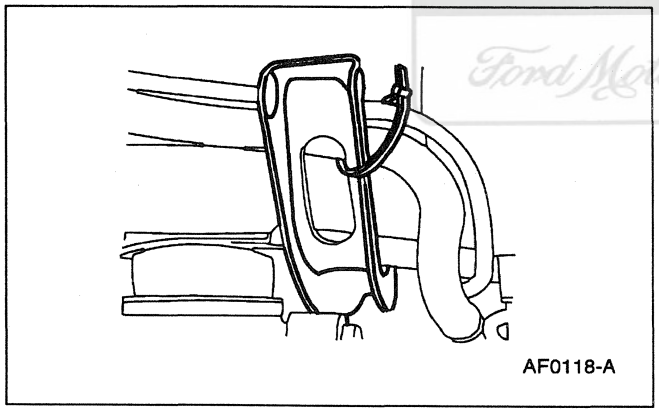

7. Wire the upper rear suspension arm and bushing out of the way.

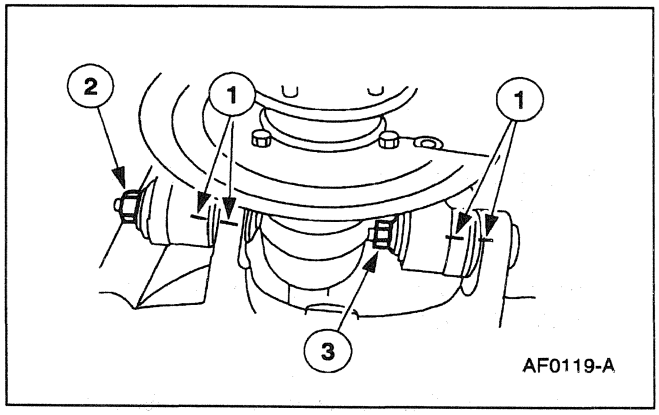

8. ⚠ **CAUTION: Failure to mark the position of the rear suspension arm bushing will result in bushing wind-up on assembly, causing misalignment.**

   Separate the rear wheel knuckle (5A969) from the lower rear suspension arm and bushing (5500) .

   1 Mark the position of the rear suspension arm bushing in relation to the rear wheel knuckle.

   2 Holding the front bolt stationary, remove the retaining nut.

   3 Holding the rear bolt stationary, remove the retaining nut.

REMOVAL AND INSTALLATION (Continued)

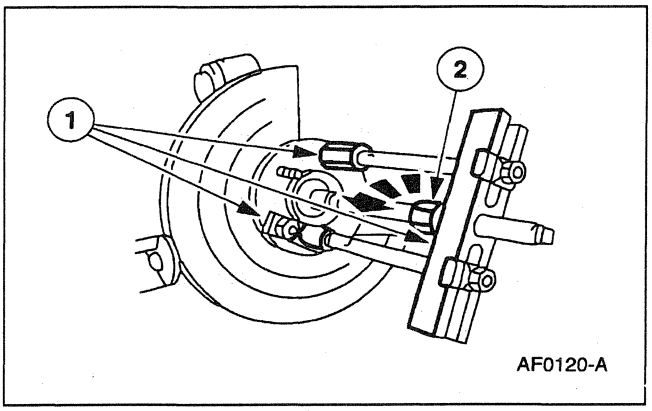

9. Separate the rear hub (1109) and halfshaft.
   1 Attach the hub remover and adapters to the lug bolts.
   2 Turn the nut on the forcing screw counterclockwise until the halfshaft is free in the rear hub .

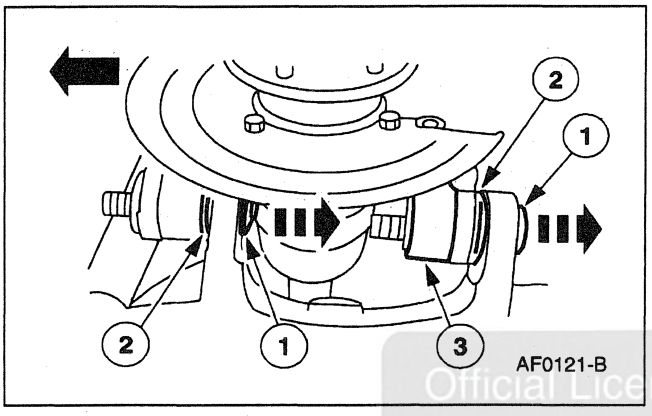

10. Remove the rear wheel knuckle .
    1 Remove the lower bolts.
    2 Remove the washers.
    3 Remove the rear wheel knuckle from the vehicle.

Official Licensed Product
Ford Motor Company

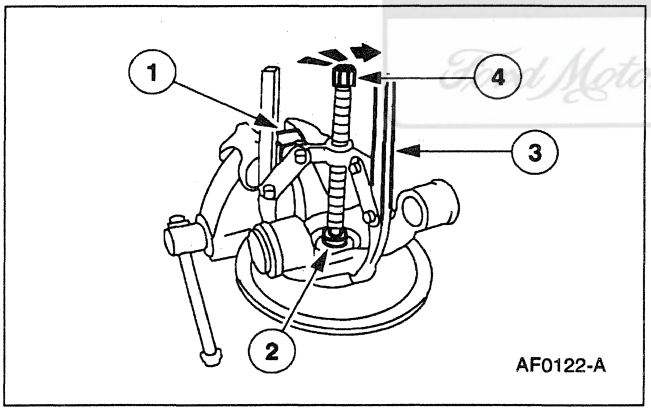

11. Separate the rear hub from the rear wheel knuckle
    1 Place the rear wheel knuckle in a vise.
    2 Place the step plate adapter over the hub.
    3 Install the 2-3 jaw puller.
    4 Turn the forcing screw clockwise to press out the rear hubs.

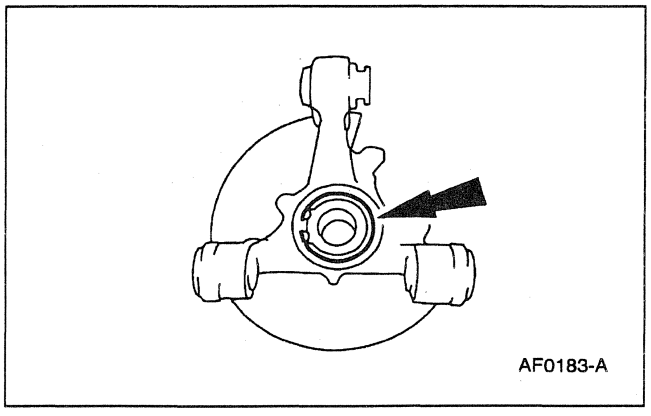

12. Remove the wheel bearing retaining ring.

REMOVAL AND INSTALLATION (Continued)

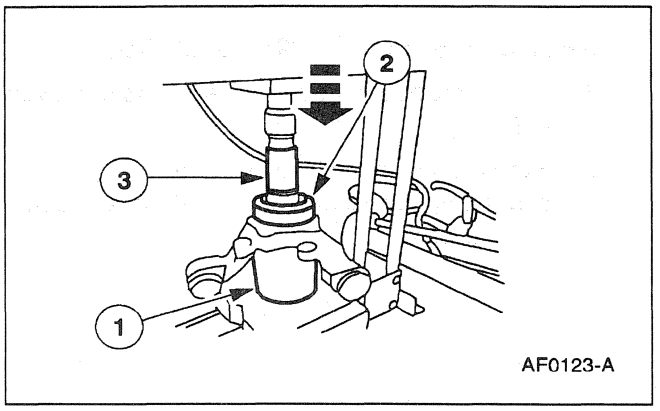

13. Press the wheel bearing out of the rear wheel knuckle .
    1 Place the hub support and rear wheel knuckle on the press bed.
    2 Place the front hub bearing remover/replacer over bearing.
    3 Carefully press out the wheel bearing.

Installation

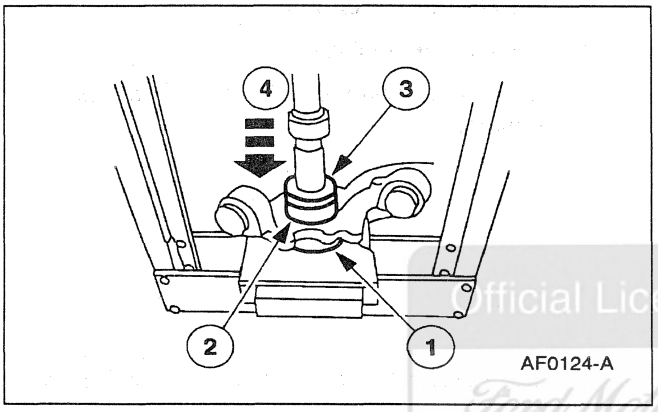

1. Install the wheel bearing into the rear wheel knuckle .
    1 Place the rear wheel knuckle on the press bed.
    2 Position the bearing into the bore.
    3 Place the bearing replacer on top of the bearing.
    4 Press the bearing into the rear wheel knuckle until the bearing clears the retaining ring groove and bottoms out in the bore.

Official Licensed Product
Ford Motor Company

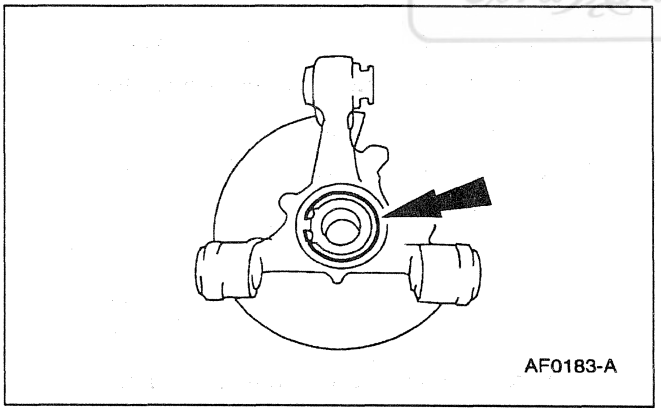

2. Install the retaining ring.

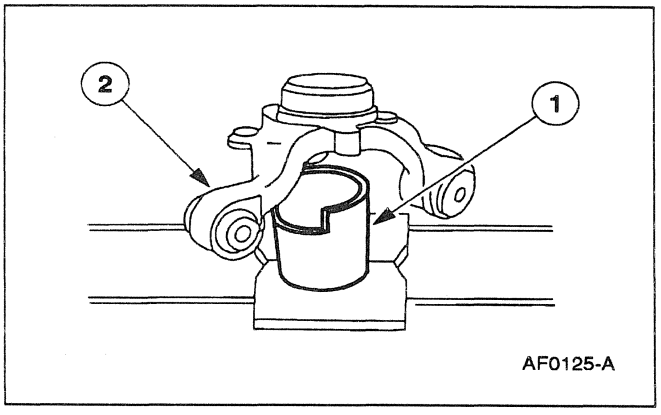

3. **⚠ CAUTION: The wheel bearing must be supported while installing the hub, or damage will result.**

   Support the rear wheel knuckle.
    1 Place the hub support on the press bed.
    2 Position the rear wheel knuckle on the hub support.

REMOVAL AND INSTALLATION (Continued)

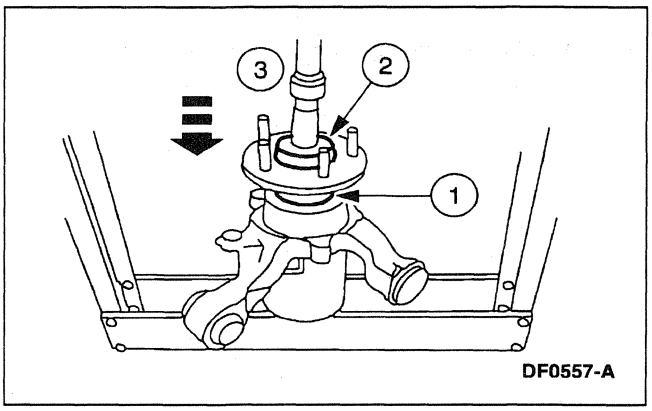

4. Install the rear hub into the rear wheel knuckle (5A968).
   1 Place the rear hub into the wheel bearing.
   2 Place the Front Hub Bearing Remover/Replacer onto the rear hub.
   3 Press the hub into the bearing.

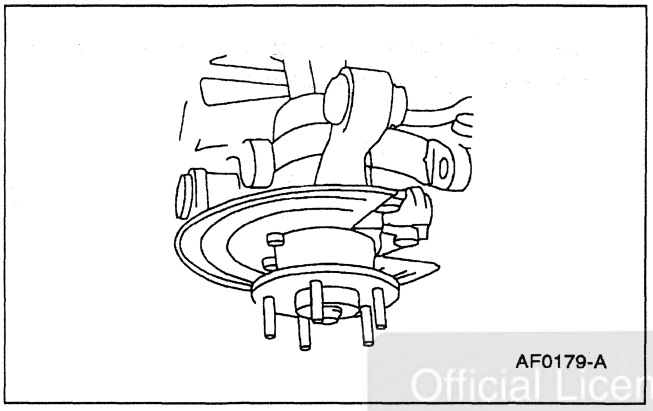

5. Place the knuckle and rear hub assembly onto the halfshaft, and engage the splines.

Official Licensed Product
Ford Motor Company

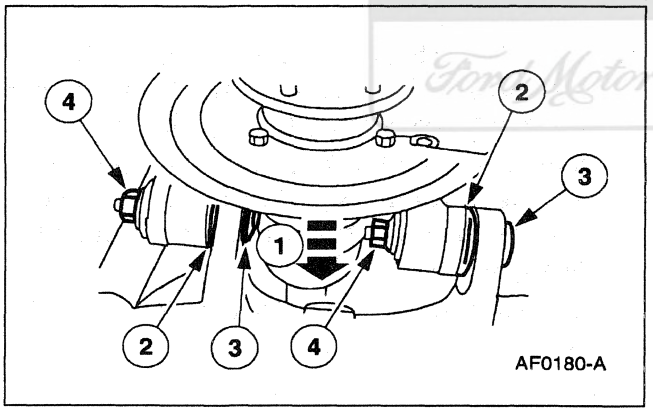

6. ⚠ **CAUTION: The lower control arm bolts must be installed with the Torx® heads facing the rear of the vehicle.**

   Attach the rear wheel knuckle to the lower rear suspension arm and bushing.
   1 Push the halfshaft inward to gain clearance to install the front bolt.
   2 Place the washer between the arm and the knuckle.
   3 Install the front and rear bolts.
   4 Hand-tighten the retaining nuts.

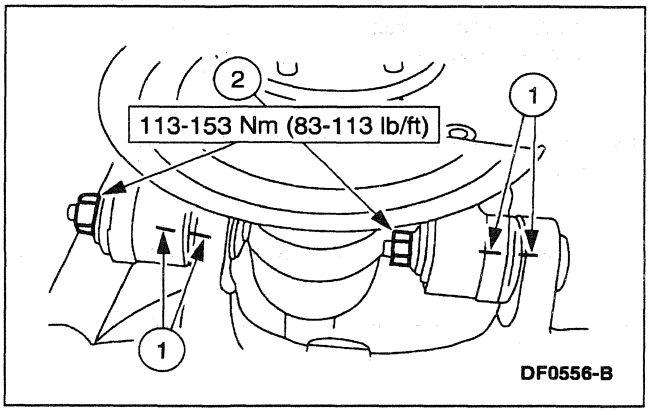

7. Tighten the lower control arm bolts.
   1 Align the index marks.
   2 Holding the bolts stationary, tighten the nuts to specification.

REMOVAL AND INSTALLATION (Continued)

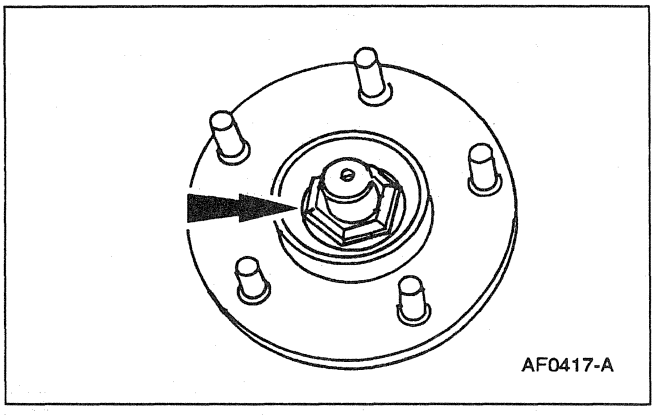

8. Install and hand-tighten the rear axle wheel hub retainer .

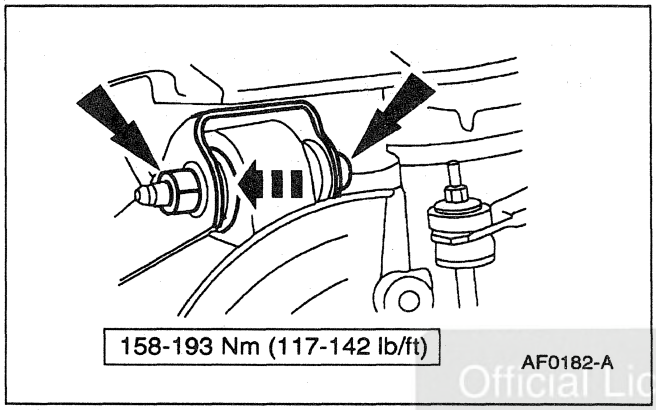

9. Install the upper rear suspension arm, bushing, nut and bolt. Tighten to specification.

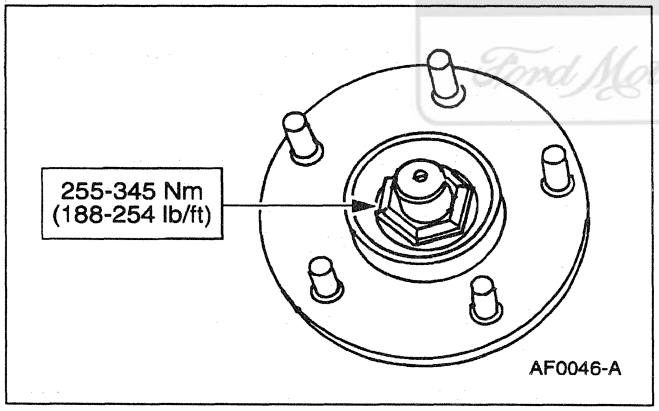

10. ⚠ **CAUTION: Power tools must not be used to tighten the rear axle wheel hub retainer , or rear wheel bearing damage will result.**

    Since the rear wheel bearing (1225) cannot be adjusted, the rear axle wheel hub retainer must not be backed off after reaching the required torque during installation.

    Tighten the rear axle wheel hub retainer to specification.

11. Install the rear disc brake rotor , rear disc support bracket and the rear disc brake caliper ; refer to Section 206-04.

12. Install the wheel and tire assembly; refer to Section 204-04.

13. Lower the vehicle. Turn the air suspension service switch on.

Official Licensed Product
Ford Motor Company

REMOVAL AND INSTALLATION (Continued)

Shock Absorber

Removal

WARNING: THE AIR SUSPENSION SYSTEM MUST BE SHUT OFF PRIOR TO HOISTING, JACKING OR TOWING AN AIR SUSPENSION VEHICLE. THIS CAN BE ACCOMPLISHED BY DISCONNECTING THE BATTERY OR TURNING OFF THE AIR SUSPENSION SWITCH LOCATED IN THE LUGGAGE COMPARTMENT ON THE LH SIDE. FAILURE TO DO SO CAN RESULT IN UNEXPECTED INFLATION OR DEFLATION OF THE AIR SPRINGS WHICH CAN RESULT IN SHIFTING OF THE VEHICLE DURING THESE OPERATIONS.

WARNING: THESE VEHICLES ARE EQUIPPED WITH GAS-PRESSURIZED REAR SHOCK ABSORBERS WHICH WILL EXTEND UNASSISTED. DO NOT APPLY HEAT OR FLAME TO THE SHOCK ABSORBER TUBE DURING REMOVAL.

Official Licensed Product
Ford Motor Company

CAUTION: The rear shock absorbers act as the rebound stops for the rear suspension. When rear shock absorbers are removed, the suspension arms must be restrained to prevent damage to these components. The best method for rear shock absorber removal is to use a drive-on hoist or alignment pit.

1. Turn the air suspension switch off.
2. Position the vehicle on a drive-on hoist or alignment pit, or use an equivalent method of supporting the vehicle on its suspension.
3. Inside the luggage compartment, position insulation out of the way from the shock absorber upper mount.

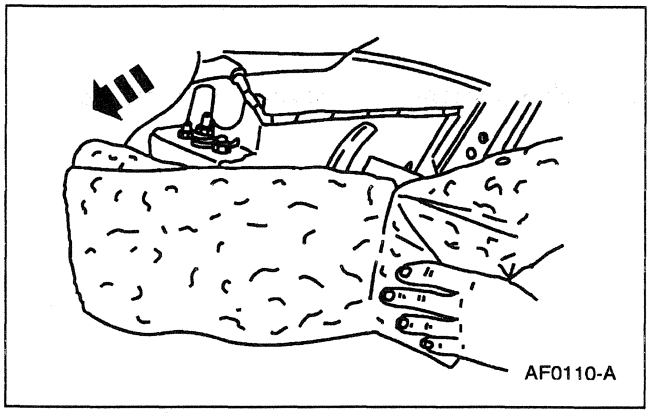

REMOVAL AND INSTALLATION (Continued)

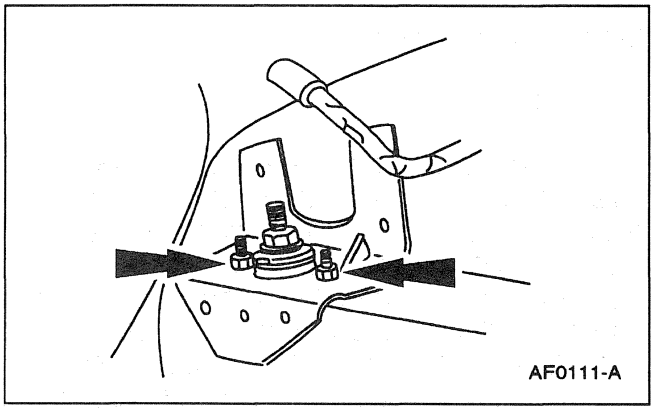

4. Remove the upper shock mount-to-body nuts.

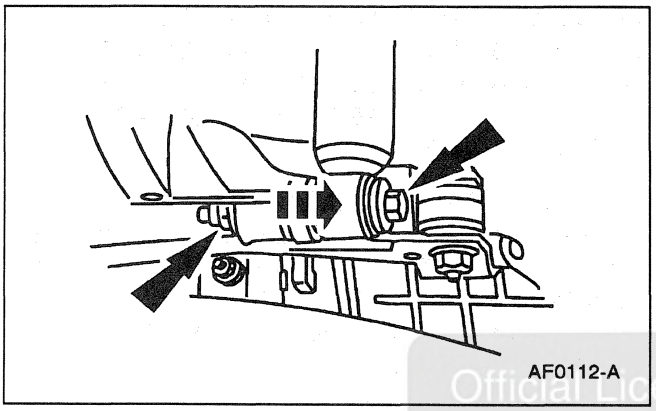

5. Remove the lower mount, nut, washer and bolt. Remove the rear shock absorber (18125) from the vehicle.

Official Licensed Product
Ford Motor Company

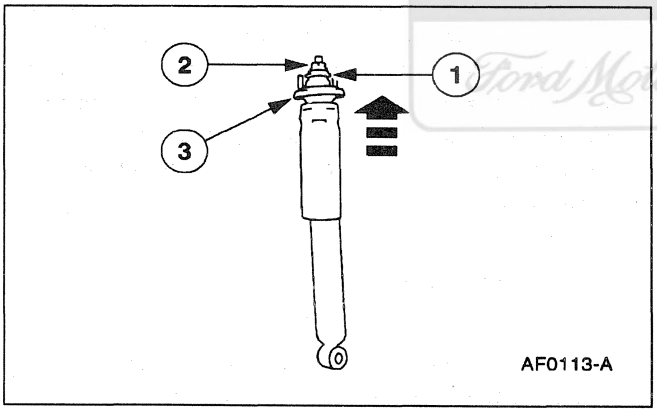

6. Separate the rear shock absorber insulator (18197) from the rear shock absorber .
   1 Grasp the flats on the insulator upper washer firmly.
   2 Remove the insulator retaining nut.
   3 Remove the rear shock absorber insulator from the rear shock absorber .

Installation

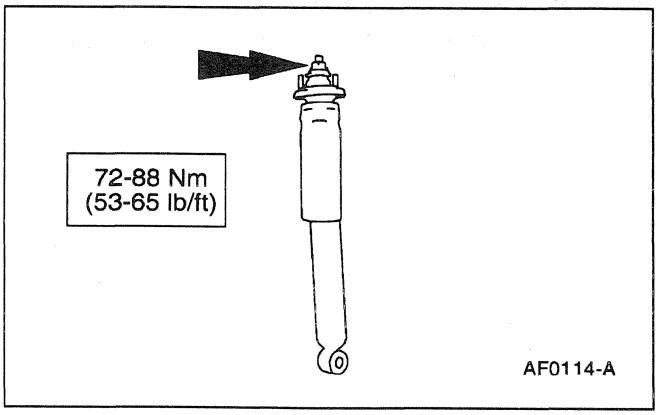

1. Follow the removal procedure in reverse order.

REMOVAL AND INSTALLATION (Continued)

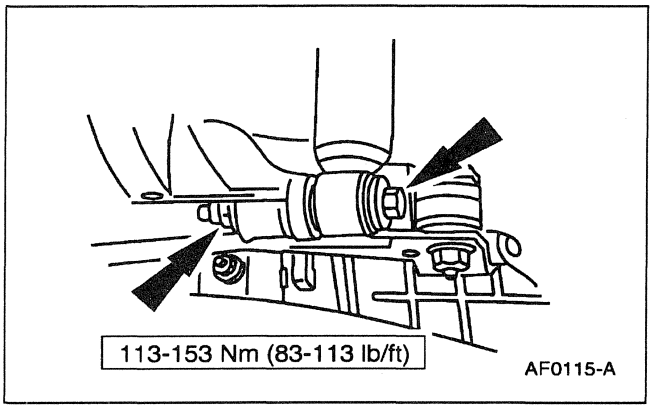

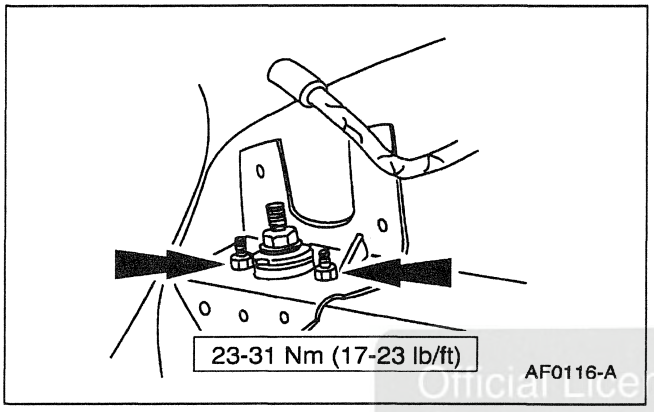

Official Licensed Product
Ford Motor Company

SPECIFICATIONS

Torque Specifications

Description	Nm	Lb/Ft
Lower Rear Suspension Arm and Bushing-to-Rear Sub-Frame Nut (Front)	225-275	166-203
Lower Rear Suspension Arm and Bushing-to-Rear Sub-Frame Nut (Rear)	191-259	141-191
Lower Rear Suspension Arm and Bushing-to-Rear Suspension Compensator Link Nut	113-153	82-113
Lower Rear Suspension Arm and Bushing-to-Rear Wheel Knuckle Nuts	113-153	83-113
Stabilizer Bar Bracket-to-Rear Subframe Bolt	34-46	25-34
Stabilizer Link-to-Rear Stabilizer Bar Nut and Lower Rear Suspension Arm and Bushing Nuts	17-23	13-17

(Continued)

Torque Specifications

Description	Nm	Lb/Ft
Shock Absorber-to-Lower Rear Suspension Arm and Bushing Nut	113-153	83-113
Shock Absorber-to-Body (Upper Mount) Nuts	23-31	17-23
Shock Absorber Insulator Retainer Nut	72-88	53-65
Rear Axle Wheel Hub Retainer	255-345	188-254
Rear Wheel Disc Brake Shield-to-Rear Wheel Knuckle Bolts	30-50	22-37
Rear Disc Brake Caliper-to-Rear Wheel Knuckle Anchor Bolts	98-132	73-97
Height Sensor Bracket to Lower Bracket	21-29	16-21
Lug Nuts	115-142	85-104
Exhaust Hanger Bracket Bolt	24-31	18-22

(Continued)

SPECIFICATIONS (Continued)

Torque Specifications

Description	Nm	Lb/Ft
Exhaust Outlet Pipe Bracket	22-33	16-24
Upper Rear Suspension Arm and Bushing-to-Rear Sub-Frame Nut	68-92	50-68
Upper Rear Suspension Arm and Bushing-to-Rear Wheel Knuckle Nut	158-193	117-142

Official Licensed Product
Ford Motor Company

SECTION 204-04 Wheels and Tires

VEHICLE APPLICATION: Mark VIII

SUBJECT **PAGE**

DESCRIPTION AND OPERATION
- Safety Precautions 204-04-2
- Wheels and Tires 204-04-2

DIAGNOSIS AND TESTING
- Wheels and Tires 204-04-3
  - Component Tests 204-04-5
    - Tire and Wheel Runout 204-04-5
    - Tire Runout 204-04-5
    - Wheel Runout 204-04-5
  - Inspection and Verification 204-04-3
    - Road Test 204-04-3
  - Symptom Chart 204-04-4

REMOVAL AND INSTALLATION
- Wheel and Tire 204-04-6

GENERAL PROCEDURES
- Wheel Leaks 204-04-7

SPECIFICATIONS 204-04-9

Official Licensed Product
Ford Motor Company

DESCRIPTION AND OPERATION

Safety Precautions

WARNING: NEVER RUN THE ENGINE WITH ONE WHEEL OFF THE GROUND, FOR EXAMPLE, WHEN CHANGING A TIRE. THE WHEEL(S) RESTING ON THE GROUND COULD CAUSE THE VEHICLE TO MOVE.

WARNING: THE TIRE AND WHEEL MUST ALWAYS BE PROPERLY MATCHED. IT IS VERY IMPORTANT TO DETERMINE THE SIZE OF EACH COMPONENT BEFORE ANY ASSEMBLY OPERATIONS COMMENCE. FAILURE TO ADHERE TO THESE INSTRUCTIONS CAN RESULT IN AN EXPLOSIVE SEPARATION AND CAUSE SERIOUS BODILY INJURY OR DEATH.

WARNING: AFTERMARKET AEROSOL TIRE SEALANTS ARE EXTREMELY FLAMMABLE. ALWAYS QUESTION THE CUSTOMER TO MAKE SURE THESE PRODUCTS HAVE NOT BEEN USED.

WARNING: AFTERMARKET WHEEL ASSEMBLIES MAY NOT BE COMPATIBLE WITH THE VEHICLE. USE OF INCOMPATIBLE WHEEL ASSEMBLIES CAN RESULT IN EQUIPMENT FAILURE AND POSSIBLE INJURY. USE ONLY APPROVED WHEEL ASSEMBLIES.

WARNING: USE ONLY WHEELS AND LUG NUTS THAT HAVE BEEN DESIGNED FOR CURRENT MODEL YEAR FORD TRUCKS. AFTERMARKET WHEELS OR LUG NUTS MAY NOT FIT OR FUNCTION PROPERLY, AND CAN CAUSE PERSONAL INJURY OR DAMAGE THE VEHICLE.

WARNING: ALWAYS WEAR SAFETY GOGGLES OR A FACE SHIELD WHEN PERFORMING ANY WORK WITH TIRE AND WHEEL ASSEMBLIES.

CAUTION: Do not clean aluminum wheels with steel wool, abrasive-type cleaners or strong detergents. Use Custom Bright Metal Cleaner 8A-19522-A or equivalent meeting Ford specifications ESR-M5B194-B.

CAUTION: Reduce the air pressure as much as possible by pushing the valve core plunger in prior to removing the valve core.

When performing any inspection or repair procedures on wheels (1007) and tires, follow the preceding safety precautions.

Wheels and Tires

WARNING: DO NOT MIX DIFFERENT TYPES OF TIRES, SUCH AS RADIAL, BIAS, OR BIAS-BELTED, ON THE SAME VEHICLE EXCEPT IN EMERGENCIES (TEMPORARY SPARE USAGE). VEHICLE HANDLING CAN BE SERIOUSLY AFFECTED AND CAN RESULT IN LOSS OF CONTROL.

Factory-installed tires and wheels are designed to operate satisfactorily with loads up to and including full-rated load capacity when inflated to recommended inflation pressures.

Ford Motor Company

DIAGNOSIS AND TESTING

Wheels and Tires

Special Tool(s)

ST1238-A	Radial Runout Gauge 418-F123 (007-0056A) or Equivalent

Inspection and Verification

⚠ WARNING: A VEHICLE EQUIPPED WITH A TRACTION-LOK® DIFFERENTIAL WILL ALWAYS HAVE BOTH WHEELS DRIVING. IF, WHILE THE VEHICLE IS BEING SERVICED, ONLY ONE WHEEL IS RAISED OFF THE FLOOR AND THE REAR AXLE IS DRIVEN BY THE ENGINE, THE WHEEL ON THE FLOOR COULD DRIVE THE VEHICLE OFF THE STAND OR JACK. BE SURE BOTH REAR WHEELS ARE OFF THE FLOOR.

⚠ WARNING: NEVER RUN THE ENGINE WITH ONE WHEEL OFF THE GROUND, FOR EXAMPLE, WHEN CHANGING A TIRE. THE WHEEL(S) RESTING ON THE GROUND COULD CAUSE THE VEHICLE TO MOVE.

⚠ WARNING: DO NOT BALANCE THE WHEELS AND TIRES WHILE THEY ARE MOUNTED ON THE VEHICLE. POSSIBLE TIRE DISINTEGRATION OR DIFFERENTIAL FAILURE COULD RESULT, CAUSING PERSONAL INJURY AND EXTENSIVE COMPONENT DAMAGE. USE OFF-VEHICLE WHEEL AND TIRE BALANCER ONLY.

Be sure to follow the warnings when performing inspection and verification.

Road Test

Verify the customer concern by performing a road test on a smooth road. If any vibrations are apparent, go to Section 100-04.

To maximize tire performance, inspect for signs of improper inflation and uneven wear, which may indicate a need for balancing, rotation, or front suspension alignment.

Correct tire pressure and driving techniques have an important influence on tire life. Heavy cornering, excessively rapid acceleration and unnecessary sharp braking increase tire wear.

Replacement tires must follow the recommended:

- tire sizes.
- speed rating.
- load range.
- radial construction type.

Use of any other tire size or type can seriously affect:

- ride.
- handling.
- speedometer/odometer calibration.
- vehicle ground clearance.
- tire clearance between the body and chassis.
- wheel bearing life.
- brake cooling.

Wheels need to be replaced when:

- bent.
- dented.
- heavily rusted.
- leaking.
- they have elongated wheel hub bolt holes.
- they have excessive lateral or radial runout.

Wheel and tire assemblies are attached by five noncentering lug nuts.

It is mandatory to use only the tire sizes recommended on the tire chart attached to the vehicle. Larger or smaller tires can damage the vehicle, affect durability, and require changing the speedometer calibration. Make sure wheel size and offsets match those recommended for the tire in use.

1. Inspect for signs of uneven wear that may indicate a need for balancing, rotation, front suspension alignment, damaged tie rod, or steering components.
2. Check tires for:
   - cuts.
   - stone bruises.
   - abrasions

Official Licensed Product Collector Emblems

DIAGNOSIS AND TESTING (Continued)

- blisters.
- embedded objects.

3. Tread wear indicators are molded into the bottom of the tread grooves. Replace the tire when the indicator bands become visible.

Symptom Chart

Symptom Chart

Condition	Possible Source	Action
• Tires Show Excess Wear on Edge of Tread	• Underinflated tires.	• ADJUST air pressure in tires.
	• Vehicle overloaded.	• RETURN vehicle — NOTIFY customer of overload condition.
	• High-speed cornering.	• RETURN vehicle — NOTIFY customer of cause of condition.
	• Incorrect wheel alignment.	• SET toe to specification; REFER to Section 204-00.
• Tires Show Excess Wear in Center of Tread	• Tires overinflated.	• ADJUST air pressure.
• Other Excessive Tire Wear Problems	• Improper tire pressure.	• ADJUST pressure.
	• Loose or leaking shock absorbers.	• TIGHTEN or REPLACE as necessary.
	• Front end out of alignment.	• ALIGN front end; REFER to Section 204-00.
	• Front wheel bearings out of adjustment.	• REFER to Section 204-00 for inspection procedure.
	• Loose, worn or damaged suspension components.	• REFER to Section 204-00.
	• Wheel and tire assembly out of balance.	• BALANCE wheel and tire assembly.
	• Excessive lateral or radial runout of wheel or tire.	• REFER to Component Tests in this section.
	• Improper tire rotation intervals.	• ADVISE customer of condition.
• Wobble or Shimmy	• Damaged wheel bearings.	• REFER to Section 204-00.
	• Loose or damaged suspension components.	• REFER to Section 204-00.
	• Bent wheel.	• REPLACE as necessary.
	• Damaged tire.	• REPLACE as necessary.
	• Loose lug nuts.	• TIGHTEN to specification.
• High-Speed Shake	• Wheel hub face/pilot/bolt circle runout.	• REFER to Section 100-04.
	• Tires/wheels.	
	• Wheel bearings.	
	• Suspension/steering linkage.	
	• Engine.	
	• Transmission.	
	• Brake rotors imbalance.	
• Vehicle Vibration	• Driveline — engine.	• REFER to Section 100-04.
	• Tires.	

Official Licensed Product

DIAGNOSIS AND TESTING (Continued)

Component Tests

Tire and Wheel Runout

Excessive radial and lateral runout of a wheel and tire assembly can cause roughness, vibration, wheel tramp, tire wear, and steering wheel tremor.

Before checking runout, and to avoid false readings caused by temporary flat spots in the tires check runout only after the vehicle has been driven far enough to warm the tires.

The extent of the runout is measured with the radial runout gauge. All measurements are made on the vehicle with the tires inflated to recommended inflation pressures.

Tire Runout

Measure radial and lateral tire runout at the positions shown in the illustration. Runout should not exceed specifications.

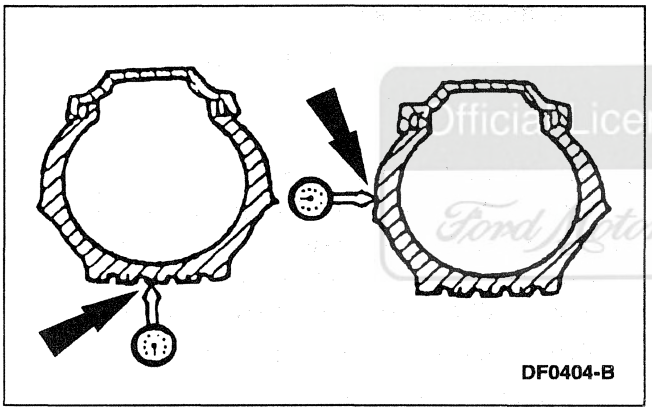

Wheel Runout

Measure radial and lateral wheel runout at the positions shown in the illustration. Runout should not exceed specifications.

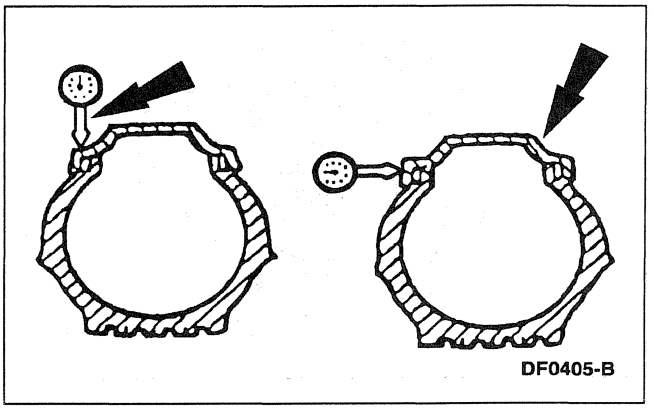

Official Licensed Product
Ford Motor Company

REMOVAL AND INSTALLATION

Wheel and Tire

Removal

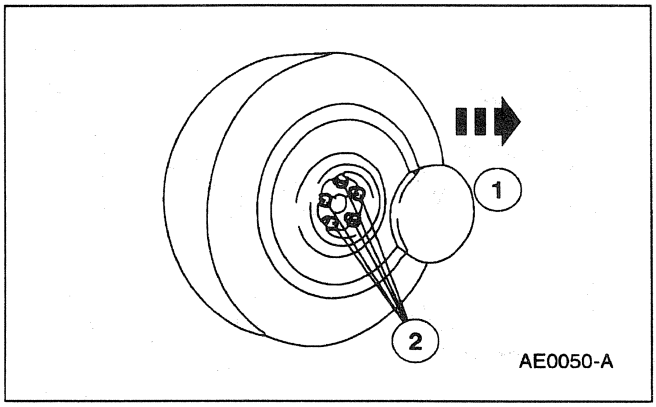

1. Loosen the lug nuts (1012).
   1 Remove the wheel cover (1130), if so equipped.
   2 **CAUTION: Do not use heat to loosen a seized lug nut. Heat can damage the wheel and wheel bearings.**
   Loosen, but do not remove the lug nuts.

2. **CAUTION: Never use the differential housing as a lift point.**
   Raise the vehicle until the tire clears the floor; refer to Section 100-02.

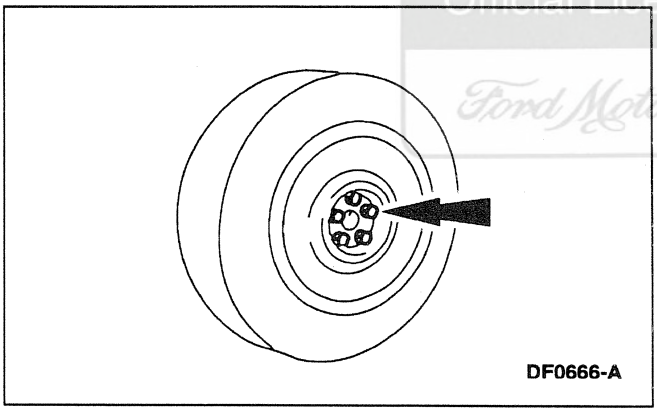

3. **CAUTION: Do not use heat to loosen a frozen wheel because heat can shorten the life of the wheel and damage the wheel bearings. If the wheel cannot be removed by hand, use a wheel puller to remove the frozen wheel.**
   Remove the wheel and tire from the vehicle.
   - Remove the lug nuts.
   - Remove the wheel and tire.

Official Licensed Product
Ford Motor Company

REMOVAL AND INSTALLATION (Continued)

Installation

1. **WARNING: WHEN A WHEEL IS INSTALLED, ALWAYS REMOVE ANY CORROSION, DIRT OR FOREIGN MATERIAL PRESENT ON THE MOUNTING SURFACES OF THE WHEEL OR THE SURFACE OF THE WHEEL HUB, BRAKE DRUM OR BRAKE ROTOR THAT CONTACTS THE WHEEL. INSTALLING WHEELS WITHOUT PROPER METAL-TO-METAL CONTACT AT THE WHEEL MOUNTING SURFACES CAN CAUSE THE LUG NUTS TO LOOSEN AND THE WHEEL TO COME OFF WHILE THE VEHICLE IS IN MOTION, RESULTING IN LOSS OF CONTROL.**

   Position the wheel and tire on the vehicle.

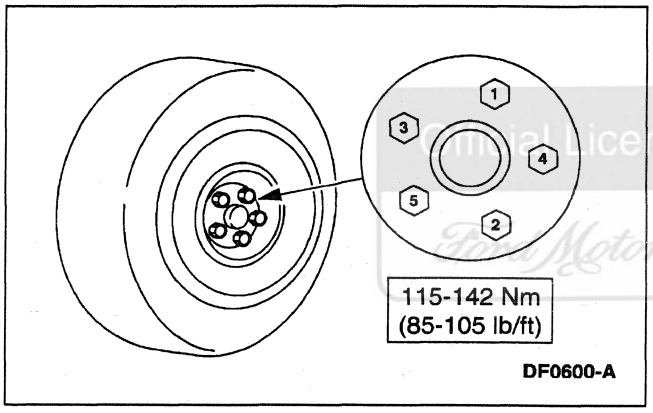

2. **CAUTION: Failure to tighten the lug nuts in a star pattern can result in high rotor runout, which will speed up the development of brake roughness, shudder and vibration.**

   Tighten the lug nuts to specification in a star-pattern sequence.

3. Install the wheel cover, if so equipped.

GENERAL PROCEDURES

Wheel Leaks

NOTE: Wheel repairs that use welding or peening are not approved. An inner tube is not an acceptable repair for leaking wheels (1007) or tires.

If the air pressure in a tire mounted on an aluminum wheel is found to be low, perform the following procedure before considering wheel replacement.

1. Remove the tire and wheel assembly, and inspect the wheel for structural damage. If none exists, go to Step 2. If the wheel is damaged, replace it.

GENERAL PROCEDURES (Continued)

2. With the tire mounted on the wheel, locate the air leak using a water bath or equivalent method, and mark the location. Check the complete wheel for possible additional leaks. When leaks are marked, dismount the tire marking valve location on the tire for proper indexing.

3. On the tire side of the wheel , thoroughly clean the leaking area with an appropriate cleaner (Professional Choke and Linkage Cleaner E8AZ-19A501-AA or equivalent meeting Ford specification ESR-M14P10-A) or use sandpaper of approximately 80-grit to remove all contamination. Using the sandpaper, score the surface of the leaking area to improve adhesion of the sealer. If the valve stem is close to the area, remove it.

4. Use a clean cloth to remove all cleaner or sanding dust.

5. **NOTE:** Do not use a torch containing oxyacetylene.

   Heat the prepared area with a Heat Gun or a propane torch until Aluminum Wheel Repair Compound E7AZ-19554-A or equivalent meeting Ford specification ESA-M4G280-A flows. Apply the hot melt material over the prepared area using a liberal flow and wiping action. Repair is most effective when heat is applied to the brake side of the rim, and the sealer is melted by heat in the metal.

6. Apply only enough heat to melt the sealer, then remove the heat source. After repairing the leak, allow the wheel to cool until it can be handled safety.

7. ⚠ **CAUTION: Use caution when mounting the tire so as not to damage the sealer.**

   Index and assemble the tire and wheel. Inflate the tire to the recommended pressure as indicated on the tire pressure decal.

8. Repeat Step 2 to verify repair.

9. When the repair is completed, balance the assembly and install it on the vehicle.

Official Licensed Part
Ford Motor Company

SPECIFICATIONS

General Specifications

Item	Specification
Wheel—Aluminum Cast	
Wheel Size	406.4 x 117.8 mm (16 x 7 inch)
No. of Bolts	5
Bolt Circle Diameter	107.95 mm (4.25 inch)
Offset	39 mm (1.53 inch)
Tire Usage	P225 60R16-97V
Max. Radial Runout	1.14 mm (0.045 inch)
Max. Balance Weight	140 g (4.9 oz) Per Wheel 70 g (2.5 oz) Per Side
Wheel Aluminum Space	
Wheel Size	4.06 4 x 101.6 mm (16 x 4.0 inch)
No. of Bolts	5
Bolt Circle Diameter	107.95 mm (4.25 inch)
Offset	39 mm (1.53 inch)
Tire Usage	T125 80K16
Tire Inflation	
Tires	See Safety Certification Sticker Located on Driver Door Jamb

(Continued)

General Specifications

Item	Specification
Lubricant	
Silicone Dielectric Compound D7AZ-19A331-A	ESE-M1C171-A
Liquid Soap	ESR-M99B135-A
Cleaners	
Professional Choke and Linkage Cleaner E8AZ-19A501-AA	ESR-M14P10-A
Custom Bright Metal Cleaner 8A-19522-A	ESR-M5B194-B

Torque Specifications

Description	Nm	Lb/Ft
Lug Nuts	115-142	85-105

Official Licensed Product Ford Motor Company

SECTION 204-05 Suspension Load Leveling Control

VEHICLE APPLICATION: Mark VIII

SUBJECT	PAGE
DESCRIPTION AND OPERATION	
Load Leveling Control, Suspension	204-05-2
DIAGNOSIS AND TESTING	
Suspension Load Leveling Control	204-05-6
Inspection and Verification	204-05-6
Air Suspension Control Module Diagnostic Trouble Code (DTC) Index	204-05-8
Quick Checks Without NGS Tester	204-05-9
Pinpoint Tests	204-05-14
Symptom Chart	204-05-11
REMOVAL AND INSTALLATION	
Air Compressor	204-05-100
Air Spring — Rear	204-05-105
Air Spring — Shock Absorber, Front	204-05-108
Control Module — Air Suspension	204-05-105
Drier	204-05-103
Height Sensor	204-05-117
Solenoid Valve	204-05-112
Switch — Air Suspension	204-05-99
GENERAL PROCEDURES	
Air Leaks	204-05-119
Air Spring Fill	204-05-118
Ride Height Adjustments	204-05-119
SPECIFICATIONS	204-05-122

Official Licensed Product
Ford Motor Company

DESCRIPTION AND OPERATION

Load Leveling Control, Suspension

Air Suspension Components

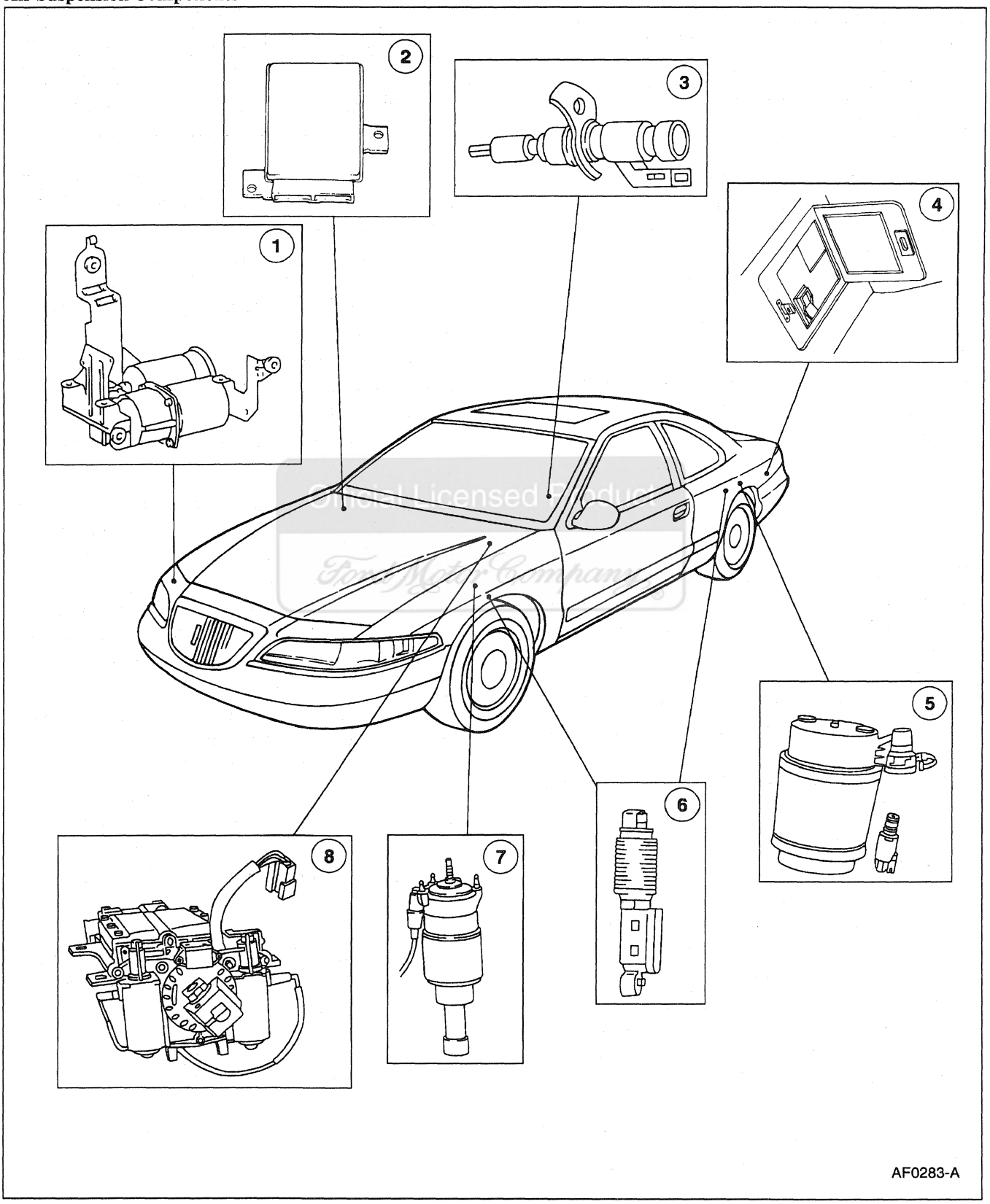

DESCRIPTION AND OPERATION (Continued)

Item	Part Number	Description
1	5319	Air Compressor (Includes Compressor Air Drier)
2	5A919	Air Suspension Control Module
3	9E731	Vehicle Speed Sensor
4	—	Air Suspension Switch
5	—	Air Spring
6	5359	Air Suspension Height Sensor
7	—	Air Spring — Shock Absorber
8	18B015	Electronic Steering Sensor

(Continued)

The vehicle is equipped with an air suspension system and an electronic variable orifice (EVO) steering system. Both systems are controlled by the air suspension control module.

The air suspension system:

- Is an air-operated, microprocessor-controlled, suspension system.
- Replaces the conventional coil spring suspension.
- Provides low spring rates for improved ride and automatic load leveling.
- Has a 30-second averaging interval to prevent the air suspension control module from making unnecessary corrections due to normal vehicle motion.
- To eliminate the chance of catching a door on a curb as the vehicle vents down, the air suspension control module will not allow any venting to occur when a door is open.
- The air suspension control module does not allow any vent operations for the first 30 seconds after the ignition switch has been turned to RUN. Even if a vehicle is extremely high at one corner, do not expect it to vent until the ignition switch has been in RUN for 30 seconds.

When weight is added to the vehicle, the air suspension system responds as follows:

- Air suspension height sensor length is reduced in the rear and extended in the front from trim length, sending a ''vehicle is low'' signal to the air suspension control module.
- To restore vehicle to the trim position, the air suspension control module turns the compressor on by grounding the compressor relay. The relay is ground-side switched.
- To allow pressurized air to enter the rear air springs or front air spring and shock absorber, the air suspension control module opens the air spring solenoid.
- Compressed air flows from the compressor through the air compressor drier assembly air lines and air spring solenoid into the air springs.
- As the air springs raise the body height, the air suspension height sensor (5359) increases in the rear and decreases in the front in length until the preset trim height is reached.
- The air suspension control module then turns off the air compressor (through the relay) and closes the air spring solenoid.

When weight is removed, the air suspension system responds as follows:

- Air suspension height sensor length increases in the rear and decreases in the front from the trim length, sending a ''vehicle is high'' signal to the air suspension control module.
- To restore the vehicle to the trim position, the air suspension control module opens the vent solenoid valve (located in the compressor assembly) and opens the air spring solenoid.
- Compressed air flows from the air springs through the air spring solenoid, air lines, air compressor drier, and out the vent solenoid valve.
- As the body lowers, the length of the air suspension height sensor decreases in the rear and increases in the front until the preset trim height is reached.
- The air suspension control module then closes the vent and air spring solenoid.

The air suspension control module stays powered for one hour after the ignition switch is turned to the OFF position in order to perform leveling corrections when occupants and luggage are removed from the vehicle.

Official Licensed Product Ford Motor Company

DESCRIPTION AND OPERATION (Continued)

The air suspension control module uses door ajar input from the steering column/ignition/lighting control module for two different functions:

- Prevents air from venting when a door is open to avoid the possibility of the vehicle lowering and the door catching on an obstruction.
- Making a correction immediately after the doors are closed if needed.

NOTE: The compressor motor contains a thermal overload circuit breaker which automatically resets if the circuit breaker is tripped by excessive heat.

The air compressor assembly:

- Is a single-cylinder electric motor-driven unit which provides pressurized air as required.
- Consists of the compressor and vent solenoid and an air compressor drier.
  - — The air compressor drier is replaced separately.
  - — The air compressor and vent solenoid must be replaced as an assembly.
- Is mounted in the engine compartment on the RH front fender apron (16054) below the engine air cleaner (ACL)(9600) .
- Is powered by a relay which is controlled by the air suspension control module.
- Distributes pressurized air through the air compressor drier which contains silica gel (a drying agent).
- Removes the moisture from the air compressor drier when vented air passes out of the system during vent operation.

The compressor relay is needed because the air suspension control module cannot directly provide the high current needed to run the compressor motor. It operates as follows:

- The air suspension control module provides a ground to energize the relay.
- High current then flows through the relay to the battery and to the compressor motor.

⚠ WARNING: NEVER ROTATE AN AIR SPRING SOLENOID TO THE RELEASE SLOT IN THE END CAP FITTING UNTIL ALL PRESSURIZED AIR HAS ESCAPED FROM THE SPRING TO PREVENT INJURY.

A combination front spring and shock absorber and a rear air spring with separate shock absorber are mounted in the conventional front strut/rear spring locations.

- The air content of both the front air spring and shock absorber and the rear air spring is controlled by the air suspension control module to maintain a predetermined vehicle ride height.
- Each air spring has a solenoid to seal the air spring and to allow air passage into and out of the individual air spring.
- Lowering the vehicle corners requires the air suspension control module to open at least two solenoids, the vent and one air spring solenoid.
- Air exhausted from the air spring is vented through the air compressor drier.

If a leak is detected in any of the eight quick-connect fittings, it can be repaired using an air spring connector repair kit (5B321) containing a new O-ring, collet, release ring and O-ring removal tool. The outer housing of the fitting cannot be repaired.

⚠ CAUTION: The air suspension switch must be turned to the OFF position when the vehicle is hoisted, jacked, towed, jump started or raised off the ground, to avoid unnecessary operation of the system and/or possible damage to its components.

The air suspension switch provides the system enable signal to the air suspension control module in the ON position only. The switch is located on the LH side of the luggage compartment.

The air suspension height sensor sends signals to the air suspension control module.

Non-licensed Product
Ford Motor Company

DESCRIPTION AND OPERATION (Continued)

A magnet mounted in the lower slide portion of the air suspension height sensor moves relative to the air suspension height sensor housing, generating a signal that is sent to the air suspension control module.

There are three possible conditions the air suspension control module interprets from signals from the air suspension height sensor :

1. Vehicle is at trim height—204-209 mm (8-8.2 in) when measured from the air suspension height sensor ball stud to ball stud.
2. Vehicle is below trim height.
3. Vehicle is above trim height.

The vehicle speed sensor (VSS)(9E731) is located on the transmission and is used to establish vehicle speed.

The vehicle speed signal is used by the EVO power steering system as follows:

- The output current to the power steering control valve actuator (3783) is a function of vehicle speed and the steering wheel rotation rate.
- When vehicle speed is less than approximately 16 km/h (10 mph), the output current is less than 100 mA and near full power steering assist is provided.
- As vehicle speed increases, the current increases to approximately 600 mA. The current then remains constant at approximately 600 mA for vehicle speeds greater than approximately 112 km/h (70 mph). Conversely, as vehicle speeds decrease, the current decreases.

Vehicle speed is also used to determine the proper trim height of the vehicle.

- At approximately 105 km/h (65 mph) the suspension system lowers the vehicle trim for a more stable high-speed profile.

The air suspension control module also controls the amount of power steering assist provided. This power steering assist is determined by the amount of change in the steering wheel rotation rate and vehicle speed.

An optical electronic steering sensor (photocell), mounted on the lower steering column is used to establish the rate of the steering wheel rotation:

- When the steering wheel rotation rate reaches 19 rpm, the output current to the power steering actuator begins to reduce, thereby providing additional power steering assist.
- After the steering wheel rotation rate drops below 19 rpm, the level of power steering assist will return to a lower level which is also regulated by the vehicle speed sensor (VSS) input.

Unlicensed Product
Ford Motor Company

DIAGNOSIS AND TESTING

Suspension Load Leveling Control

Refer to Electrical and Vacuum Troubleshooting Manual, Cell 41, Air Suspension for schematic and connector information.

Special Tool(s)

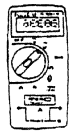 ST1137-A	73 Digital Multimeter or equivalent 105-R0051
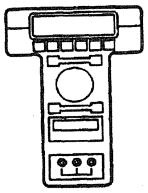 ST1217-A	New Generation Star (NGS) Tester or equivalent 007-00500

Inspection and Verification

The air suspension/steering test connector is located in the engine compartment on the front side of the RH front shock absorber tower. This air suspension/steering test connector allows communications between the air suspension control module and the New Generation STAR (NGS) Tester.

System errors detected by the air suspension control module are stored as diagnostic trouble codes (DTCs) in the control module memory. A DTC will be retained for the next 80 ignition switch cycles.

When the air suspension control module detects a system error, the air suspension system is disabled for the current ignition cycle. If the condition causing the system error clears up during the current ignition switch cycle, the system will not reactivate.

1. Verify the customer's concern by operating the computer controlled suspension system to duplicate the condition.
2. Inspect to determine if one of the following mechanical or electrical concerns apply:

Visual Inspection Chart

Mechanical	Electrical
• Restricted suspension movement • Overloaded luggage compartment • Ball stud brackets	• Open fuses: — Power distribution box fuse 4 (15A mini), fuse 13 (60A maxi) — Fuse junction panel fuse 28 (10A) • Loose connectors • Corroded connectors • Air suspension switch OFF • Corroded battery terminals

3. If inspection reveals obvious concerns that can be readily identified, repair as required.
4. If the concern remains after the inspection, go to the diagnostic instructions in this section.
5. Retrieve all diagnostic trouble codes stored in the control module memory by executing Function Test 211; refer to Function Tests.
6. Run the Auto Test Diagnostics to retrieve diagnostic trouble codes; refer to Auto Test Diagnostics.
7. If the stored DTCs are different from the current DTCs, always repair the current DTCs first.
8. If more than one DTC is displayed in either the memory or the current DTCs list, repair in the following order:
   - 1st: Electrical Faults, DTC 25, DTCs 50 through 95.
   - 2nd: Electro-Pneumatic Faults, DTC 98 and DTC 99.
   - 3rd: Courtesy Lamp Switches, DTC 29; Electronic Steering Sensor, DTC 45.

Refer to Air Suspension Control Module Diagnostic Trouble Code (DTC) Index to determine correct pinpoint test to begin diagnostics.

Refer to Symptom Chart to gain additional insight before you begin.

Official Licensed Ford Motor Company

DIAGNOSIS AND TESTING (Continued)

Always perform pinpoint tests corresponding to the DTC to determine where the fault lies and to repair the fault properly.

Drive Cycle Diagnostics

This part of the diagnostics will illuminate the CHECK AIR RIDE warning message in the message center if a system error is detected in the system while driving the vehicle. Up to 32 diagnostic trouble codes (DTC) will remain stored in memory for up to one hour after the ignition switch is turned OFF. The air suspension switch in the luggage compartment must remain ON during this time. Write down the DTCs at this time. If the vehicle has not been driven in over an hour or the air suspension switch has been turned OFF, drive the vehicle with the air suspension switch ON to try to duplicate the condition.

Auto Test

NOTE: 1995 Mark VIII NGS Tester software may be used.

1. Install battery charger to power vehicle during testing.
2. Open luggage compartment door to access the air suspension switch.
3. Connect NGS Tester to air suspension/steering test connector on the RH front shock absorber tower. Select air suspension auto test for Mark VIII from the NGS menu.
4. Make sure both doors are closed.
5. Turn air suspension switch to OFF, then to ON.
6. Turn ignition switch from OFF to RUN.
7. Press NGS Tester trigger button to begin Self-Test.
8. ⚠ **CAUTION: Do not lean on vehicle or open doors while DTC 10 is displayed. This will introduce errors into the test results.**

   DTC 10 is displayed while Auto Test is running. Any faults discovered by Auto Test will halt the test and be displayed on NGS Tester.
9. When DTC 12 is displayed:
   - Open driver door.
   - Turn steering wheel a minimum of 1/4 turn in both directions.
   - Exit vehicle and close driver door.
   - Open then close passenger door.
   - Press NGS Tester trigger button to continue test.
10. Read displayed DTCs. DTC 11 means vehicle has passed Auto Test.
11. If vehicle passes Auto Test, exit diagnostics by removing NGS Tester from air suspension/steering test connector and turning ignition switch OFF. Other DTCs retrieved indicate faults that must be repaired. Refer to the Air Suspension Control Module Diagnostic Trouble Code (DTC) Index for Pinpoint Test direction.
12. If unable to enter Auto Test, GO to Pinpoint Test A.

Function Test

1. Install battery charger to power vehicle during testing.
2. Open luggage compartment door. Locate air suspension switch and make certain switch is OFF.
3. Connect NGS Tester to air suspension/steering test connector on RH front shock absorber tower.
4. Turn the air suspension switch ON.
5. Make sure both doors are closed.
6. Turn ignition switch to RUN.
7. Select functional test from the NGS menu.
8. Perform Function Test 211 and record DTCs displayed.
9. Perform Function Test 228 to clear control module memory.
10. Scroll to select desired functional test. Refer to Function Test Index.
11. **NOTE:** Compressor may shut off if it runs for more than two minutes. If compressor shuts OFF, exit test and turn ignition off for at least 10 minutes.

    Press NGS Tester trigger button to begin desired test.
12. Press NGS Tester trigger button to end test.
13. Scroll to next desired function test.

Official Licensed Product

DIAGNOSIS AND TESTING (Continued)

Air Suspension Control Module Diagnostic Trouble Code (DTC) Index

NOTE: Prior to testing for any of the following DTCs, check DTC 18 for low battery voltage or DTC 19 for high battery voltage to determine power and ground. If no fault is found, do not replace any parts, but continue with listed DTCs.

Air Suspension Control Module Diagnostic Trouble Code (DTC) Index

DTCs	DTC Caused By	Description	Action
10	Air Suspension Control Module	Auto Test in Progress	Continue With Diagnostics.
11	Air Suspension Control Module	Auto Test Passed	Continue With Diagnostics.
12	Air Suspension Control Module	Perform Manual Tests	Continue With Diagnostics.
15	Air Suspension Control Module	No Faults Stored in Memory	GO to Symptom Chart.
18	Air Suspension Control Module	Low Battery Voltage	GO to Pinpoint Test D.
19	Air Suspension Control Module	High Battery Voltage	GO to Pinpoint Test E.
20	Air Suspension Control Module	Air Suspension Control Module Memory Error 2	REPLACE the air suspension control module; REFER to Control Module — Air Suspension.
25	Air Suspension Control Module	Height Sensor Supply Not 5 Volts	GO to Pinpoint Test F.
29	Air Suspension Control Module	Two Door Cycles Not Detected During Test	GO to Pinpoint Test G.
35	Air Suspension Control Module	EVE Power Steering Control Valve Actuator Concern	GO to Pinpoint Test H.
45	Air Suspension Control Module	Steering Wheel Rotation Not Detected	GO to Pinpoint Test J.
50	Air Suspension Control Module	LH Front Air Suspension Height Sensor Signal Out of Range	GO to Pinpoint Test K.
55	Air Suspension Control Module	RH Front Air Suspension Height Sensor Signal Out of Range	GO to Pinpoint Test L.
60	Air Suspension Control Module	LH Rear Air Suspension Height Sensor Signal Out of Range	GO to Pinpoint Test M.
70	Air Suspension Control Module	Vent Solenoid Valve	GO to Pinpoint Test N.
75	Air Suspension Control Module	Compressor Relay Control Circuit	GO to Pinpoint Test P.
80	Air Suspension Control Module	LH Front Air Spring Solenoid Valve Circuit Failure	GO to Pinpoint Test Q.

(Continued)

DIAGNOSIS AND TESTING (Continued)

Air Suspension Control Module Diagnostic Trouble Code (DTC) Index

DTCs	DTC Caused By	Description	Action
85	Air Suspension Control Module	RH Front Air Spring Solenoid Valve Circuit Failure	GO to Pinpoint Test R.
90	Air Suspension Control Module	LH Rear Air Spring Solenoid Valve Circuit Failure	GO to Pinpoint Test S.
95	Air Suspension Control Module	RH Rear Air Spring Solenoid Valve Circuit Failure	GO to Pinpoint Test T.
98	Air Suspension Control Module	Compressor Run Time Exceeded	GO to Pinpoint Test U.
99	Air Suspension Control Module	Unable to Detect Raising or Lowering of One or More Corners	GO to Pinpoint Test V.

Function Test Index

Function Test Index

Test Code	Description
211	Display All Diagnostic Trouble Codes In Memory
212	LH Front Air Spring Solenoid Pump with Audible Air Suspension Height Sensor Check
213	LH Front Air Spring Solenoid Vent with Audible Air Suspension Height Sensor Check
214	RH Front Air Spring Solenoid Pump with Audible Air Suspension Height Sensor Check
215	RH Front Air Spring Solenoid Vent with Audible Air Suspension Height Sensor Check
216	LH Rear Air Spring Solenoid Pump with Audible Air Suspension Height Sensor Check
217	LH Rear Air Spring Solenoid Vent with Audible Air Suspension Height Sensor Check
218	RH Rear Air Spring Solenoid Pump with Audible Air Suspension Height Sensor Check
219	RH Rear Air Spring Solenoid Vent with Audible Air Suspension Height Sensor Check

(Continued)

Function Test Index

Test Code	Description
221	Compressor Run
222	Actuator Output Test (Cycles All Solenoids and EVO Power Steering Control Valve Actuator)
223	LH Front Air Suspension Height Sensor Trim Detection, Audible Output
224	RH Front Air Suspension Height Sensor Trim Detection, Audible Output
225	Rear Air Suspension Height Sensor Trim Detection, Audible Output
226	Vehicle Speed Sensor Detection
227	Pulse EVO Power Steering Control Valve Actuator through Duty Cycle
228	Erase All Diagnostic Trouble Codes Stored in Control Module Memory

Quick Checks Without NGS Tester

NOTE: The following measurements and tests are general system checks. Only use these checks if the recommended pinpoint tests have not resolved the customer concern or if there is not a New Generation STAR (NGS) Tester available.

1. Turn air suspension switch ON.
2. Disconnect air suspension control module C204.
3. Disconnect the air suspension control module C205.

Official Licensed Product Ford Motor Company

DIAGNOSIS AND TESTING (Continued)

Expected Voltage and Resistance Readings

Circuit Function	Connector-Pin	Meter Reading
Control Module Ground	C205-32, circuit 938 (BK/LG) and battery ground terminal	Resistance=less than 1 ohm
Control Module Power	C204-1, circuit 418 (DG/Y) and C205-32, circuit 938 (BK/LG) C204-21, circuit 418 (DG/Y) and C205-32, circuit 938 (BK/LG)	Battery voltage Battery voltage
Ignition Signal	C204-4, 298 (P/O) and C205-32, circuit 938 (BK/LG)	Ignition switch OFF=0 volts Ignition switch in RUN=Battery voltage
Courtesy Lamp Switch Signal	C204-5, 127 (BK/LB) and C205-32, circuit 938 (BK/LG)	Both doors closed=0 volts Either door open=Battery voltage
Star Tester Input (STI) Line	C204-6, 844 (GY/R) and C205-32, circuit 938 (BK/LG)	Voltage=0 volts Resistance=greater than 1000 ohms
Air Suspension Switch	C205-11, 425 (BR/PK) and C205-32, circuit 938 (BK/LG)	Switch OFF=Battery voltage Switch ON=0 volts
Star Tester Output (STO) Line	C205-12, 419 (DG/LG) and C205-32, circuit 938 (BK/LG)	Ignition OFF=0 volts Ignition in RUN=6.0 volts
Solenoid Valves	C205-14, 415 (LG/O) and C205-32, circuit 938 (BK/LG) LH front C205-15, 414 (O/R) and C205-32, circuit 938 (BK/LG) RH front C205-16, 429 (P/LG) and C205-32, circuit 938 (BK/LG) LH rear C205-17, 416 (LB/BK) and C205-32, circuit 938 (BK/LG) RH rear	Resistance=14-18 ohms, nominal 16 ohms
Compressor Relay Control Line	C205-18,420 (DB/Y) and C205-32, circuit 938 (BK/LG)	Battery voltage
Vent Solenoid	C205-30, 421 (PK) and C205-32, circuit 938 (BK/LG)	Resistance=19-24 ohms, nominal 21 ohms

Ford Licensed Product

4. If the measurements of voltages and resistance have fallen within the given limits, the system output may now be tested. If the voltages and resistance are not within limits, repair the faults before continuing.
5. Use a jumper with an in-line fuse rated at not more than five amps.

Solenoid and Relay Output Circuit Checks

Action	Expected Result
Connect the jumper between the air suspension control module C204-1, circuit 418 (DG/Y) and the following air suspension control module C205 pins: LH front, C205-14, circuit 415 (LG/O) RH front, C205-15, circuit 414 (O/R) LH rear, C205-16, circuit 429 (P/LG) RH rear, C205-17, circuit 416 (LB/BK) Vent solenoid, C205-30, circuit 421 (PK)	Each solenoid will click open as power is applied and should click closed as power is removed. A second person listening at the solenoid locations is necessary.
Connect the jumper between the air suspension control module C205-32, circuit 938 (BK/LG) and the air suspension control module C205-18, circuit 420 (DB/Y).	The air suspension system compressor will begin running when ground is applied to Pin 18 and stop running when the ground is removed.

DIAGNOSIS AND TESTING (Continued)

6. Check air suspension height sensors, refer to Pinpoint Test F, K, L and M.

Symptom Chart

Refer to the Electrical and Vacuum Troubleshooting Manual for the connector numbers cited in the pinpoint tests.

Symptom Chart

Condition	Possible Source	Action
• CHECK AIR RIDE is Displayed in Less Than 5 Seconds After Vehicle is Started	• Air suspension control module detects an electrical concern before a leveling correction is attempted.	• **NOTE:** If no DTCs are retrieved and CHECK AIR RIDE is constantly displayed, a concern may exist with circuit 419 (DG/LG) or the message center indicator. REFER to Section 413-08. RETRIEVE the DTC that caused CHECK AIR RIDE to actuate from control module memory. (Run Functional Test 211.) • RUN the Auto Test to see what DTCs are currently seen by the air suspension control module. • DIAGNOSE/REPAIR current DTC. DIAGNOSE/REPAIR DTC 25, 50 through 95 first. DIAGNOSE/REPAIR DTC 98 and 99 second. DIAGNOSE/REPAIR DTC 29 and 45 third. • DIAGNOSE/REPAIR DTCs stored in control module memory if different from Auto Test DTCs.
• CHECK AIR RIDE Displayed at Differing Times. No Apparent Sequence of Events, Random Order	• Air suspension control module detects either an electrical concern or encounters excessive correction time while attempting to level vehicle. Will occur most frequently at: — Start up if vehicle is sitting low. — Approximately 65 mph (104 km/h) when air suspension control module attempts to lower vehicle 26 mm (1.0 in). — Approximately 35 mph (56 km/h) when air suspension control module attempts to raise vehicle 26 mm (1.0 in).	• RETRIEVE DTCs stored in control module memory. (Run Function Test 211.) • RUN Auto Test. • DIAGNOSE/REPAIR current concerns. • DIAGNOSE/REPAIR concerns from air suspension control module memory not already addressed.

Official Licensed Product
Ford Motor Company

DIAGNOSIS AND TESTING (Continued)

Symptom Chart (Continued)

Condition	Possible Source	Action
• CHECK AIR RIDE Not Displayed. One or More Corners High or Low	• System inactive and cannot turn on CHECK AIR RIDE display.	• **WARNING: DO NOT ATTEMPT TO RESET RIDE HEIGHT UNTIL THE SYSTEM PASSES THE AUTO TEST AND DISPLAYS CODE 11 OR THE MANUAL TEST CODES 29 OR 45 TO PREVENT DAMAGE.** RUN Auto Test. If no DTCs are output, GO to Pinpoint Test A and C.
	• System operating correctly, ride height out of adjustment. • Air suspension height sensor popped off ball stud.	• If the vehicle passes the Auto Test with a DTC 11, or the manual test DTCs 29 or 45 and one or more corners appear high or low, ADJUST ride height. REFER to Ride Height Adjustment.
• One or More Corners Drop Overnight. Vehicle Achieves Trim When Ignition Switch Turned to RUN	• A large drop in temperature overnight causes the air in the air springs to contract. This will cause lowering of vehicle corners and is normal.	• RETRIEVE stored DTCs. (Run Function Test 211). • A minor leak in either air springs or spring solenoid valve. This may trigger a DTC 98 if the leak is severe enough to cause excessive compressor run time before trim is reached. • If DTC 98 is retrieved from control module memory, GO to Pinpoint Test U.
• One or More Corners Low and CHECK AIR RIDE Displayed 90 Seconds to 2 Minutes After Starting Engine	• Air suspension control module has detected excessive correction time. This is caused by either: — Compressor will not operate. — A large air leak in either the compressor, air springs or the air lines.	• RETRIEVE DTC causing CHECK AIR RIDE to be displayed (Run Function Test 211). This should be DTC 99. • CHECK for compressor and/or air line leaks using Pinpoint Test V and PROCEED to other tests as required.

Official Licensed Product
Ford Motor Company

DIAGNOSIS AND TESTING (Continued)

Symptom Chart (Continued)

Condition	Possible Source	Action
• Front Air Springs Are Completely High and/or Rear Air Springs Are Completely Low. CHECK AIR RIDE Displayed 45 to 90 Seconds After Starting Vehicle. One Front Corner Is Completely Low. CHECK AIR RIDE Displayed 45 to 90 Seconds After Starting Vehicle. Rear Air Springs Are Completely Low. CHECK AIR RIDE Displayed 45 to 90 Seconds After Starting Vehicle	• Air suspension height sensor is off ball stud. • Air suspension height sensor ground is open on corners that are not trim. Air suspension control module does not detect this as an electrical error. • Wiring harness has intermittent open circuit.	• EXAMINE air suspension height sensor and REINSTALL on ball stud if required. • RUN Function Test 211 to RETRIEVE stored DTCs. • RUN Auto Test. • DIAGNOSE/REPAIR Auto Test DTCs. • If DTC 99 is received from either air suspension control module memory or Auto Test, GO to Pinpoint Test V and CHECK for open air suspension height sensor ground. • RUN Function Test 223, 224 or 225 to test for intermittent air suspension height sensor and wiring concern.
• Irregular Air Suspension Operation at Low Temperatures	• In severe cases, water will build up in air springs and recontaminate the system. • Moisture frozen in air lines and compressor air drier.	• WARM vehicle to room temperature. • DISCONNECT both ends of all air lines. • BLOW out air lines to dry. • REPLACE compressor air drier. • It may be necessary to REMOVE air springs and DRAIN water.
• **NOTE:** Most customers will not be able to detect vehicle lowering at speed but will report very sensitive steering. Air Suspension Does Not Lower at Approximately 65 mph (105 km/h) and Power Steering Efforts Are Constantly Very Light or Excessive Steering Effort While Making Quick Maneuvers at High Speed	• Air suspension control module is not receiving vehicle speed sensor signal.	• No DTCs will be stored if the air suspension control module is not receiving the vehicle speed sensor signal. • INSTALL NGS Tester in a manner that will permit driving the vehicle. • TURN off the air suspension switch located in the luggage compartment. • RUN Function Test 226. • DRIVE the vehicle at speeds over 10 mph (16 km/h). Note speed displayed on NGS Tester. • If no speed is displayed over 10 mph (16 km/h), GO to Pinpoint Test B. • If speed is displayed, RUN Auto Test. If DTC 45 is received, REFER to Section 211-00. • If DTC 45 is not received during Auto Test, system is functioning properly.

Official Licensed Product
Ford Motor Company

DIAGNOSIS AND TESTING (Continued)

Symptom Chart (Continued)

Condition	Possible Source	Action
• Customer Complains of Poor Ride Quality, or Vehicle Leans to One Side and Vehicle Passes Auto Test	• Air cannot flow freely into or out of one of the rear air springs. • A concern with one of the rear air springs may not be detected during the Auto Test. • Tire pressure too high.	• RUN Function Tests 216, 217, 218 and 219 to make sure both rear air springs can be filled or vented. If a concern is suspected, REFER to Pinpoint Test V.
• Cannot Retrieve Stored DTCs or Enter Auto Test	• Air suspension control module is not active due to wiring concern or there is a concern with NGS Tester circuits.	• GO to Pinpoint Test C and A.
• Several Conditions Existing in a Combination That Is Not Covered by Normal Diagnostics	• Intermittent concern with wiring harness, air suspension height sensor actuators or air suspension control module.	• PERFORM the Quick Checks. REFER to Quick Checks Without NGS Tester. This will help isolate concerns.
• Unable to Enter Auto Test Diagnostics	• Circuitry. • Air suspension control module. • Fuse. • Message center. • Air suspension switch.	• GO to Pinpoint Test A.
• Vehicle Speed Sensor Diagnostics	• Circuitry. • Vehicle speed sensor (VSS). • Air suspension control module. • EVO power steering control valve actuator.	• GO to Pinpoint Test B.
• No Code Displayed, Auto Test Is Running	• Circuitry. • Air suspension control module. • Fuse.	• GO to Pinpoint Test C.

Office Use Only Not for Distribution Ford Motor Company

Pinpoint Tests

PINPOINT TEST A: UNABLE TO ENTER AUTO TEST

TEST CONDITIONS	TEST DETAILS/RESULTS/ACTIONS
A1 CHECK PROCEDURE	
[1] 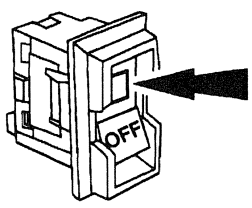 GF1440-A	[1] Turn the air suspension switch ON.

(Continued)

DIAGNOSIS AND TESTING (Continued)

PINPOINT TEST A: UNABLE TO ENTER AUTO TEST (Continued)

TEST CONDITIONS	TEST DETAILS/RESULTS/ACTIONS
A1 CHECK PROCEDURE (Continued)	
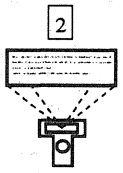	2 Perform the Auto Test. • Are DTCs 211 through 228 displayed? → **Yes** GO to **A8**. → **No** GO to **A2**.
A2 CHECK FOR DTCs	
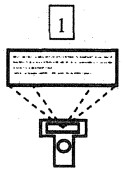	1 Perform the Auto Test. • Are any DTCs displayed? → **Yes** GO to the DTC list. → **No** GO to **A3**.
A3 TEST THE AIR SUSPENSION CONTROL MODULE FOR POWER	
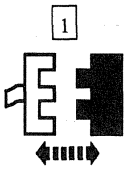 Air Suspension Control Module C204 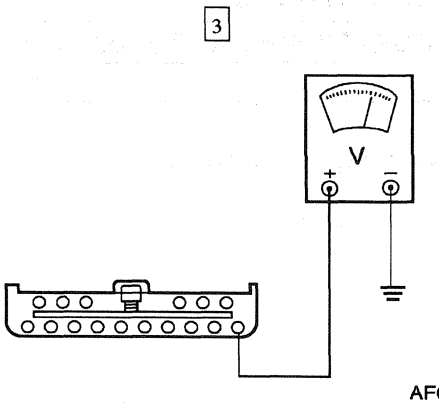	3 Measure the voltage between air suspension control module C204-1, circuit 418 (DG/Y), and ground.

(Continued)

Official Licensed Product Ford Motor Company

DIAGNOSIS AND TESTING (Continued)

PINPOINT TEST A: UNABLE TO ENTER AUTO TEST (Continued)

TEST CONDITIONS	TEST DETAILS/RESULTS/ACTIONS
A3 TEST THE AIR SUSPENSION CONTROL MODULE FOR POWER (Continued)	
4 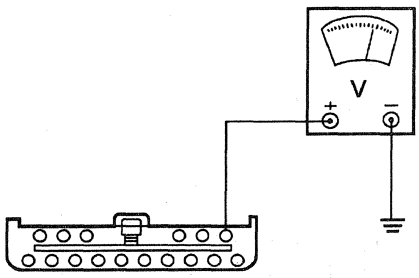 AF0267-B	4 Measure the voltage between air suspension control module C204-21, circuit 418 (DG/Y), and ground.
5 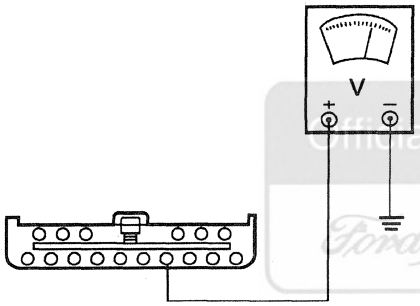 AF0268-B	5 Measure the voltage between air suspension control module C204-4, circuit 298 (P/O), and ground. • Is the voltage greater than 10 volts? → **Yes** GO to **A4**. → **No** REPAIR the open circuits as required. TEST the system for normal operation.

Official Licensed Product
Ford Motor Company

(Continued)

DIAGNOSIS AND TESTING (Continued)

PINPOINT TEST A: UNABLE TO ENTER AUTO TEST (Continued)

TEST CONDITIONS	TEST DETAILS/RESULTS/ACTIONS
A4 TEST THE AIR SUSPENSION CONTROL MODULE GROUND	
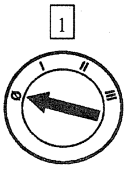 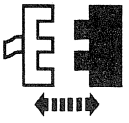 Air Suspension Control Module C205 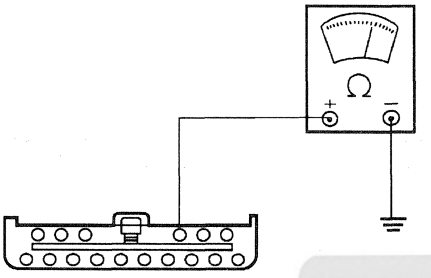 AF0269-B 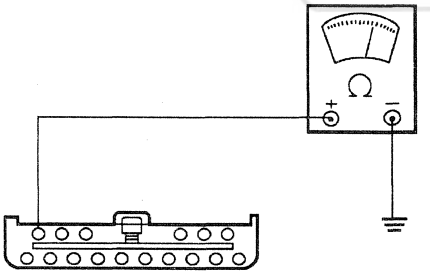 AF0270-B	3 Measure the resistance between air suspension control module C204-23, circuit 938 (BK/LG), and ground. 4 Measure the resistance between air suspension control module C205-32, circuit 938 (BK/LG), and ground. • Are the resistances less than 5 ohms? → **Yes** GO to **A5**. → **No** REPAIR circuit 938 (BK/LG). TEST the system for normal operation.

Official Licensed Product
Ford Motor Company

(Continued)

DIAGNOSIS AND TESTING (Continued)

PINPOINT TEST A: UNABLE TO ENTER AUTO TEST (Continued)

TEST CONDITIONS	TEST DETAILS/RESULTS/ACTIONS
A5 TEST CIRCUIT 419 (DG/LG) FOR VOLTAGE	
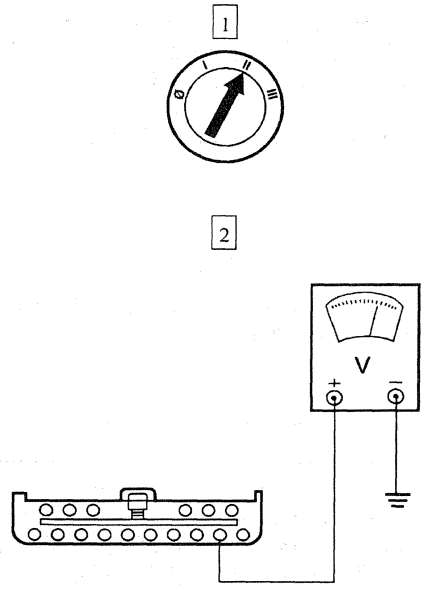	2 Measure the voltage between air suspension control module C205-12, circuit 419 (DG/LG), and ground. • Is 6 volts present? → **Yes** GO to **A7**. → **No** GO to **A6**.
A6 TEST CIRCUIT 419 (DG/LG) FOR SHORT TO GROUND	
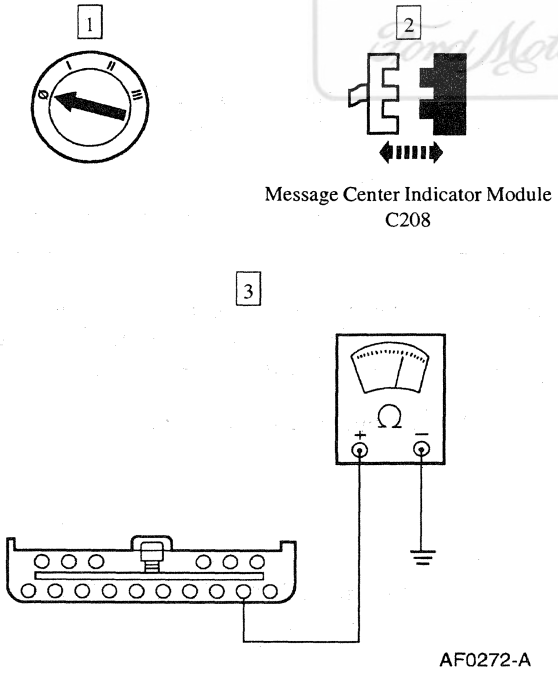	3 Measure the resistance between air suspension control module C205-12, circuit 419 (DG/LG), and ground. • Is the resistance greater than 10,000 ohms? → **Yes** REPAIR the message center; REFER to Section 413-08. → **No** REPAIR circuit 419 (DG/LG). TEST the system for normal operation.

(Continued)

Ford Motor Company

DIAGNOSIS AND TESTING (Continued)

PINPOINT TEST A: UNABLE TO ENTER AUTO TEST (Continued)

TEST CONDITIONS	TEST DETAILS/RESULTS/ACTIONS
A7 TEST CIRCUIT 419 (DG/LG) FOR OPEN	
1 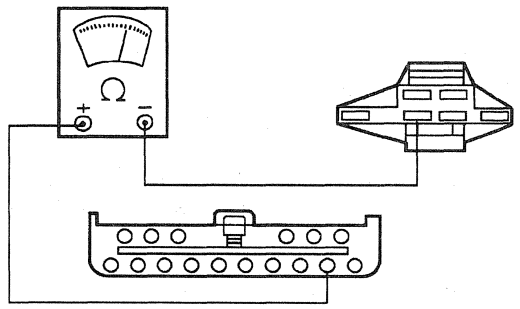 AF0273-A	1 Measure the resistance between air suspension control module C205-12, circuit 419 (DG/LG), and data link C117-4, circuit 419 (DG/LG). • Is the resistance less than 5 ohms? → **Yes** GO to **A8**. → **No** REPAIR circuit 419 (DG/LG). TEST the system for normal operation.
A8 TEST CIRCUIT 938 (BK/LG) FOR OPEN	
1 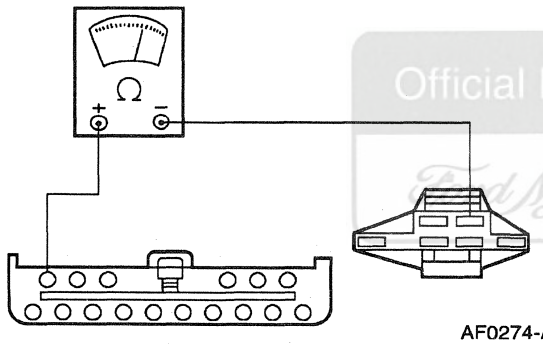 AF0274-A	1 Measure the resistance between air suspension control module C205-32, circuit 938 (BK/LG), and data link C117-2, circuit 938 (BK/LG). • Is the resistance less than 5 ohms? → **Yes** GO to **A9**. → **No** REPAIR circuit 938 (BK/LG). TEST the system for normal operation.
A9 TEST CIRCUIT 844 (GY/R) FOR OPEN	
1 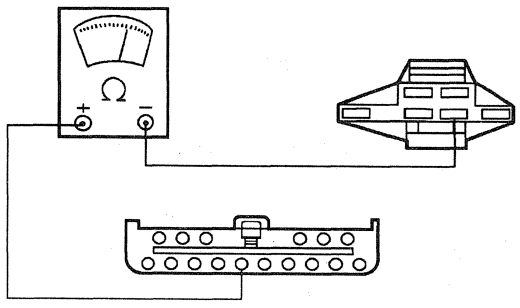 AF0275-A	1 Measure the resistance between air suspension control module C204-6, circuit 844 (GY/R), and the data link C117-5, circuit 844 (GY/R). • Is the resistance less than 5 ohms? → **Yes** GO to **A10**. → **No** REPAIR circuit 844 (GY/R). TEST the system for normal operation.

(Continued)

Official Licensed Product Ford Motor Company

DIAGNOSIS AND TESTING (Continued)

PINPOINT TEST A: UNABLE TO ENTER AUTO TEST (Continued)

TEST CONDITIONS	TEST DETAILS/RESULTS/ACTIONS
A10 TEST THE AIR SUSPENSION SWITCH	
1 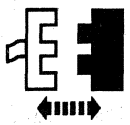 Air Suspension Switch C458 2 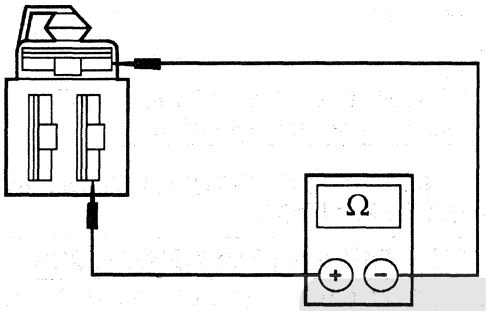 GF1460-A	2 Measure the resistance between air suspension switch C458-1, circuit 57 (BK) and air suspension switch C458-3, circuit 425 (BR/PK). 3 Turn the air suspension switch ON. • Is the resistance less than 5 ohms? → **Yes** GO to **A11.** → **No** REPLACE the air suspension switch; REFER to Switch — Air Suspension. TEST the system for normal operation.
A11 TEST CIRCUIT 57 (BK) FOR OPEN	
1 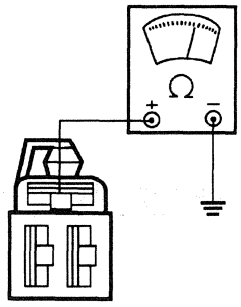 AF0352-A	1 Measure the resistance between air suspension switch C458-1, circuit 57 (BK), and ground. • Is the resistance less than 5 ohms? → **Yes** GO to **A12.** → **No** REPAIR circuit 57 (BK). TEST the system for normal operation.

Official Licensed Product
Ford Motor Company

(Continued)

DIAGNOSIS AND TESTING (Continued)

PINPOINT TEST A: UNABLE TO ENTER AUTO TEST (Continued)

TEST CONDITIONS	TEST DETAILS/RESULTS/ACTIONS
A12 TEST CIRCUIT 425 (BR/PK) FOR OPEN	
1 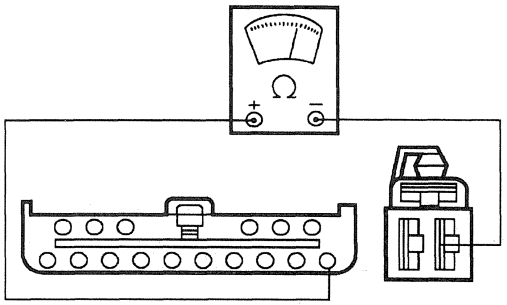 AF0353-A	1 Measure the resistance between air suspension control module C205-11, circuit 425 (BR/PK), and air suspension switch C458-3, circuit 425 (BR/PK). • Is the resistance less than 5 ohms? → **Yes** REPLACE the air suspension control module; REFER to Control Module — Air Suspension. TEST the system for normal operation. → **No** REPAIR circuit 425 (BR/PK). TEST the system for normal operation.

PINPOINT TEST B: SPEED GREATER THAN 8 KM/H (5 MPH) NOT DETECTED IN LAST 16 IGNITION CYCLES — SPEED SENSOR CIRCUIT DIAGNOSIS

TEST CONDITIONS	TEST DETAILS/RESULTS/ACTIONS
B1 CHECK THE AIR SUSPENSION CONTROL MODULE ACCEPTANCE OF THE SPEED SIGNAL	
1 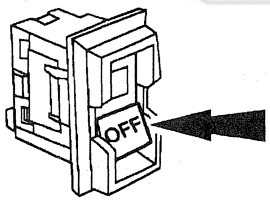 GF1439-A	1 Turn the air suspension switch OFF.
2 	2 Perform Function Test 226 — Vehicle Speed Sensor Detection.
	3 Drive the vehicle at a speed over 16 km/h (10 mph).

(Continued)

Official Licensed Product
Ford Motor Company

DIAGNOSIS AND TESTING (Continued)

PINPOINT TEST B: SPEED GREATER THAN 8 KM/H (5 MPH) NOT DETECTED IN LAST 16 IGNITION CYCLES — SPEED SENSOR CIRCUIT DIAGNOSIS (Continued)

TEST CONDITIONS	TEST DETAILS/RESULTS/ACTIONS
B1 CHECK THE AIR SUSPENSION CONTROL MODULE ACCEPTANCE OF THE SPEED SIGNAL (Continued)	
	4 Compare the speed displayed on NGS and the speed displayed on the speedometer. • Do the displayed speeds agree? → **Yes** GO to Pinpoint Test H to diagnose an EVO actuator concern. → **No** GO to **B2**.
B2 CHECK THE INTERNAL RESISTANCE OF THE VEHICLE SPEED SENSOR (VSS)	
1 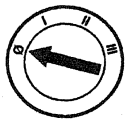 2 VSS C111 3 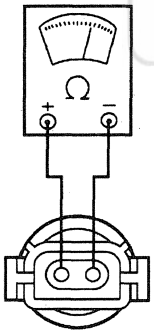 AF0248-A	3 Measure the internal resistance of the VSS between the vehicle speed sensor terminals. • Is the resistance between 180 and 240 ohms? → **Yes** GO to **B3**. → **No** REPLACE the VSS; REFER to Section 307-01. TEST the system for normal operation.

Official Licensed Product
Ford Motor Company

(Continued)

DIAGNOSIS AND TESTING (Continued)

PINPOINT TEST B: SPEED GREATER THAN 8 KM/H (5 MPH) NOT DETECTED IN LAST 16 IGNITION CYCLES — SPEED SENSOR CIRCUIT DIAGNOSIS (Continued)

TEST CONDITIONS	TEST DETAILS/RESULTS/ACTIONS
B3 CHECK CIRCUIT 150 (DG/W) FOR SHORT TO GROUND	
1 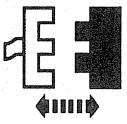 Air Suspension Control Module C204 2 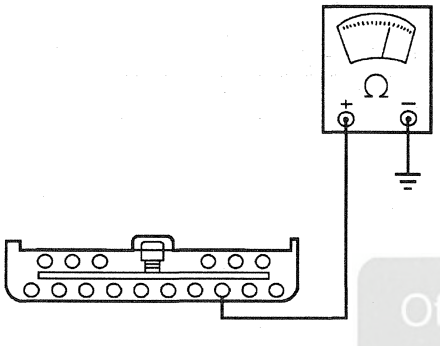 AF0249-A	2 Measure the resistance between air suspension control module C204-3, circuit 150 (DG/W), and ground. • Is the resistance greater than 10,000 ohms? → **Yes** GO to **B4.** → **No** REPAIR circuit 150 (DG/W) between the air suspension control module and the vehicle speed sensor.
B4 CHECK CIRCUIT 150 (DG/W) BETWEEN THE AIR SUSPENSION CONTROL MODULE AND THE VEHICLE SPEED SENSOR	
1 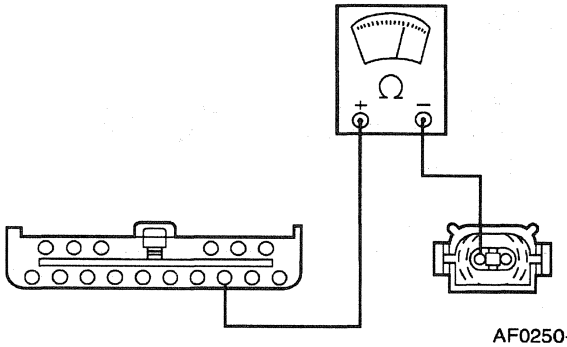 AF0250-A	1 Measure the resistance between air suspension control module C204-3, circuit 150 (DG/W) and vehicle speed sensor C111, circuit 679 (GY/BK). • Is the resistance less than 5 ohms? → **Yes** GO to **B5.** → **No** REPAIR circuit 150 (DG/W) and/or circuit 679 (GY/BK). TEST the system for normal operation.

(Continued)

Official Licensed Product Ford Motor Company

DIAGNOSIS AND TESTING (Continued)

PINPOINT TEST B: SPEED GREATER THAN 8 KM/H (5 MPH) NOT DETECTED IN LAST 16 IGNITION CYCLES — SPEED SENSOR CIRCUIT DIAGNOSIS (Continued)

TEST CONDITIONS	TEST DETAILS/RESULTS/ACTIONS
B5 CHECK CIRCUIT 938 (BK/LG) AND CIRCUIT 676 (PK/O) BETWEEN THE AIR SUSPENSION CONTROL MODULE AND THE VEHICLE SPEED SENSOR	
1 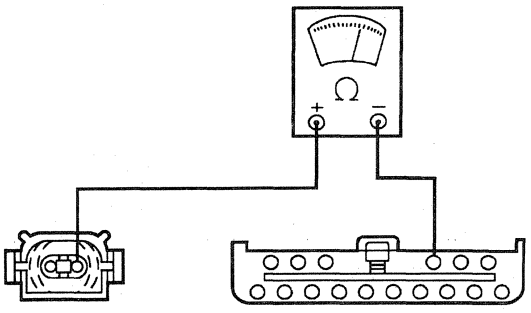 AF0251-A	1 Measure the resistance between air suspension control module C204-23, circuit 938 (BK/LG), and VSS C111, circuit 676 (PK/O). • Is the resistance less than 5 ohms? → **Yes** GO to **B6**. → **No** REPAIR circuit 938 (BK/LG) and/or circuit 676 (PK/O). TEST the system for normal operation.
B6 CHECK FOR SHORT BETWEEN CIRCUIT 150 (DG/W) AND CIRCUIT 938 (BK/LG)	
1 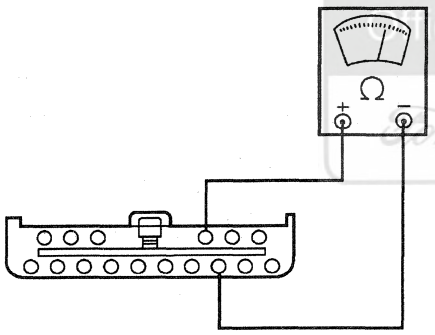 AF0252-A	1 Measure the resistance between air suspension control module C204-3, circuit 150 (DG/W), and air suspension control module C204-23, circuit 938 (BK/LG). • Is the resistance less than 5 ohms? → **Yes** REPAIR short between circuit 150 (DG/W) and circuit 938 (BK/LG). TEST the system for normal operation. → **No** REPLACE the air suspension control module; REFER to Control Module — Air Supsension. TEST the system for normal operation.

Official Licensed Product Ford Motor Company

PINPOINT TEST C: NO CODES DISPLAYED, AUTO TEST IS RUNNING

TEST CONDITIONS	TEST DETAILS/RESULTS/ACTIONS
C1 CHECK AUTO TEST	
1 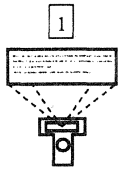	1 Perform the Auto Test. • Does the message center indicator display CHECK AIR RIDE? → **Yes** GO to **C2**. → **No** GO to **C4**.

(Continued)

DIAGNOSIS AND TESTING (Continued)

PINPOINT TEST C: NO CODES DISPLAYED, AUTO TEST IS RUNNING (Continued)

TEST CONDITIONS	TEST DETAILS/RESULTS/ACTIONS
C2 TEST CIRCUIT 419 (DG/LG) FOR SHORT TO GROUND	
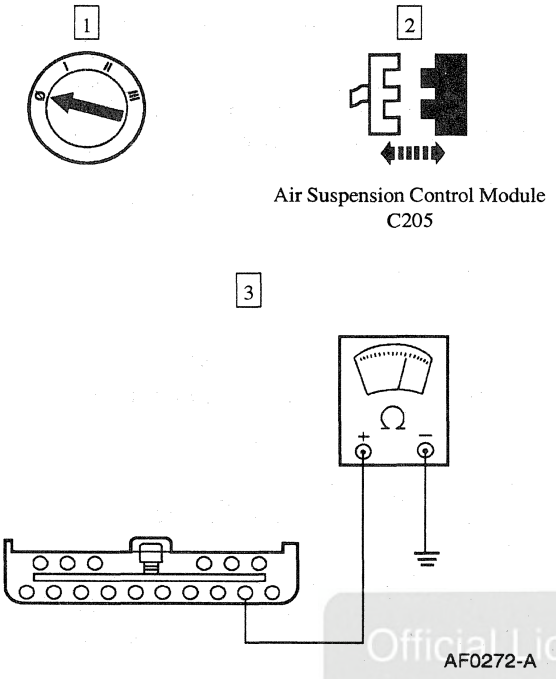	3 Measure the resistance between air suspension control module C205-12, circuit 419 (DG/LG), and ground. • Is the resistance greater than 10,000 ohms? → **Yes** GO to **C3**. → **No** REPAIR circuit 419 (DG/LG). TEST the system for normal operation.
C3 TEST CIRCUIT 419 (DG/LG) FOR OPEN	
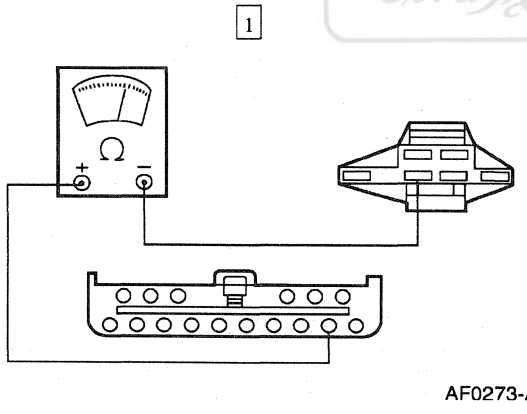	1 Measure the resistance between air suspension control module C205-12, circuit 419 (DG/LG), and data link C117-4, circuit 419 (DG/LG). • Is the resistance less than 5 ohms? → **Yes** GO to **C4**. → **No** REPAIR circuit 419 (DG/LG). TEST the system for normal operation.

Official Licensed Product
Ford Motor Company

(Continued)

DIAGNOSIS AND TESTING (Continued)

PINPOINT TEST C: NO CODES DISPLAYED, AUTO TEST IS RUNNING (Continued)

TEST CONDITIONS	TEST DETAILS/RESULTS/ACTIONS
C4 TEST CIRCUIT 419 (DG/LG) FOR SHORT TO POWER	
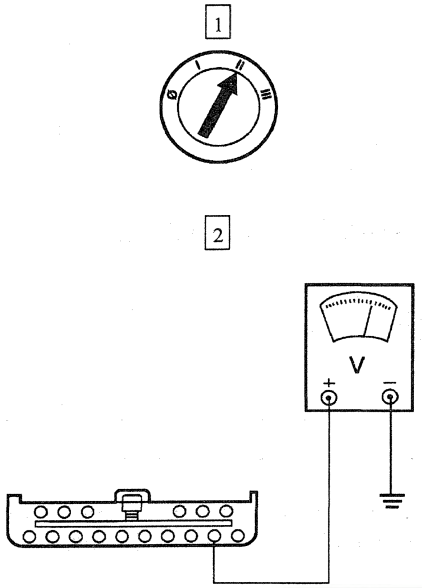 AF0271-B	2 Measure the voltage between air suspension control module C205-12, circuit 419 (DG/LG), and ground. • Is any voltage indicated? → **Yes** REPAIR circuit 419 (DG/LG). TEST the system for normal operation. → **No** GO to **C5**.
C5 TEST CIRCUIT 298 (P/O) FOR POWER	
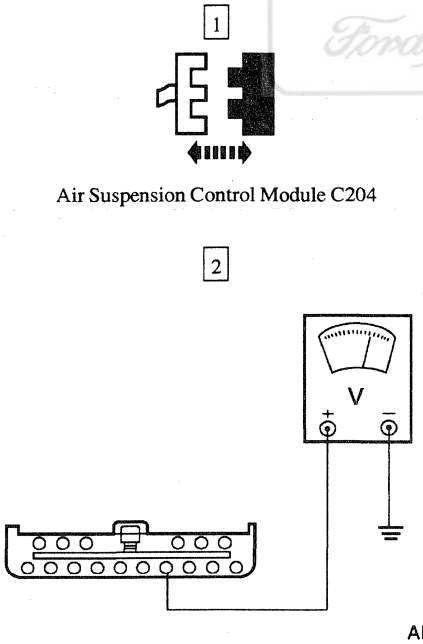 Air Suspension Control Module C204 AF0268-B	2 Measure the voltage between air suspension control module C204-4, circuit 298 (P/O), and ground. • Is the voltage greater than 10 volts? → **Yes** REPLACE the air suspension control module; REFER to Control Module — Air Suspension. TEST the system for normal operation. → **No** GO to **C6**.

Official Licensed Product Ford Motor Company

(Continued)

DIAGNOSIS AND TESTING (Continued)

PINPOINT TEST C: NO CODES DISPLAYED, AUTO TEST IS RUNNING (Continued)

TEST CONDITIONS	TEST DETAILS/RESULTS/ACTIONS
C6 TEST FUSE 28	
1 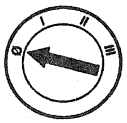 2 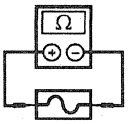 Fuse 28 (10A)	• Is the resistance less than 5 ohms? → **Yes** GO to **C8**. → **No** GO to **C7**.
C7 TEST CIRCUIT 298 (P/O) FOR SHORT TO GROUND	
1 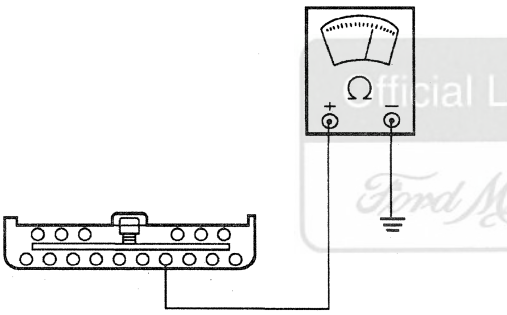 AF0354-B	1 Measure the resistance between air suspension control module C204-4, circuit 298 (P/O), and ground. • Is the resistance greater than 10,000 ohms? → **Yes** GO to **C8**. → **No** REPAIR circuit 298 (P/O). TEST the system for normal operation.

Official Licensed Product
Ford Motor Company

(Continued)

DIAGNOSIS AND TESTING (Continued)

PINPOINT TEST C: NO CODES DISPLAYED, AUTO TEST IS RUNNING (Continued)

TEST CONDITIONS	TEST DETAILS/RESULTS/ACTIONS
C8 TEST CIRCUIT 298 (P/O) FOR OPEN	
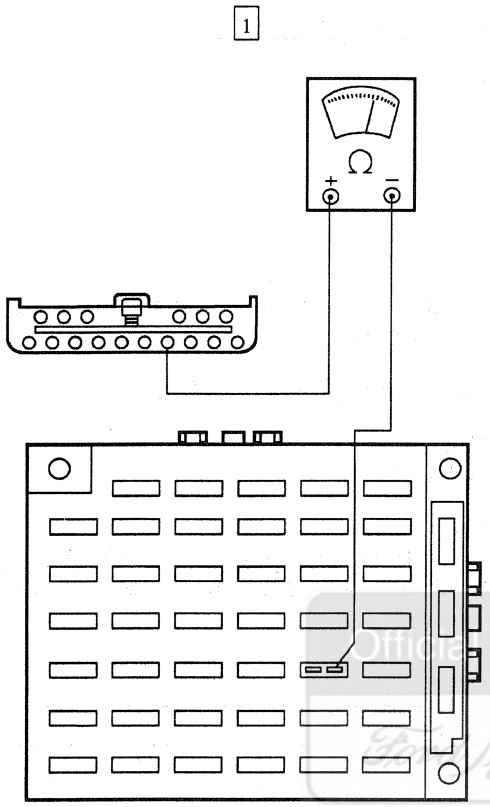 AF0355-B	1 Measure the resistance between air suspension control module C204-4, circuit 298 (P/O), and the output side of fuse 28 (10A). • Is the resistance less than 5 ohms? → **Yes** REPLACE the air suspension control module; REFER to Control Module — Air Suspension. TEST the system for normal operation. → **No** REPAIR circuit 298 (P/O). TEST the system for normal operation.

Official Licensed Product Ford Motor Company

DIAGNOSIS AND TESTING (Continued)

PINPOINT TEST D: DTC 18 — AIR SUSPENSION CONTROL MODULE DETECTS LOW BATTERY VOLTAGE

TEST CONDITIONS	TEST DETAILS/RESULTS/ACTIONS
D1 CHECK THE BATTERY VOLTAGE	
NOTE: DTC 18 will not be displayed if the existing voltage is over 11.5 volts.	
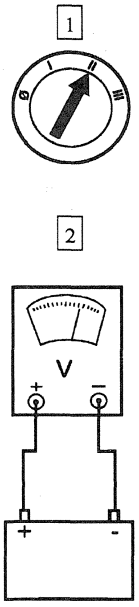 AF0201-A	2 Measure the voltage between the battery positive and negative posts. • Is the voltage greater than 13.5 volts? → **Yes** GO to **D2**. → **No** REPAIR the charging system. REFER to Section 414-00. TEST the system for normal operation.
D2 CHECK THE AIR SUSPENSION CONTROL MODULE SUPPLY	
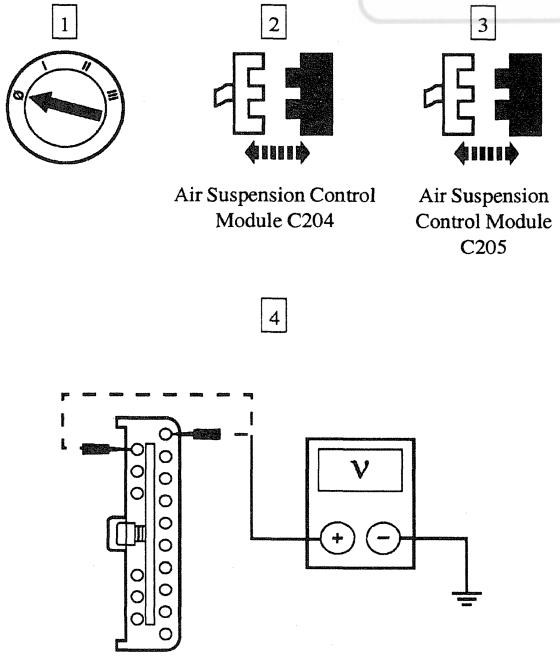 GF1451-A	4 Measure the voltage between air suspension control module C204-1, circuit 418 (DG/Y), and ground; and between air suspension control module C204-21, circuit 418 (DG/Y) and ground. • Are the voltages less than 13 volts? → **Yes** REPAIR circuit 418 (DG/Y). TEST the system for normal operation. → **No** GO to **D3**.

Official Licensed Product

(Continued)

DIAGNOSIS AND TESTING (Continued)

PINPOINT TEST D: DTC 18 — AIR SUSPENSION CONTROL MODULE DETECTS LOW BATTERY VOLTAGE (Continued)

TEST CONDITIONS	TEST DETAILS/RESULTS/ACTIONS
D3 CHECK THE AIR SUSPENSION CONTROL MODULE GROUND	
1 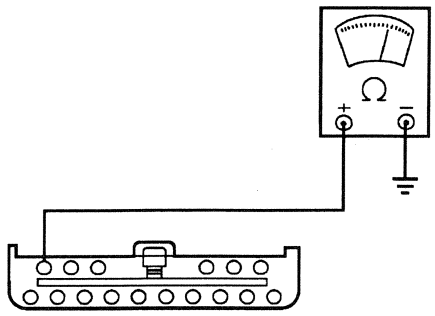 AF0203-A	1 Measure the resistance between air suspension control module C205-32, circuit 938 (BK/LG), and ground. • Is the resistance less than 5 ohms? → **Yes** REPLACE the air suspension control module; REFER to Control Module — Air Suspension. TEST the system for normal operation. → **No** REPAIR circuit 938 (BK/LG). TEST the system for normal operation.

PINPOINT TEST E: DTC 19 — AIR SUSPENSION

TEST CONDITIONS	TEST DETAILS/RESULTS/ACTIONS
E1 CHECK THE VOLTAGE AT THE BATTERY **NOTE:** DTC 19 will not be displayed unless the voltage is above 17.5 volts for 1 second.	
1 2 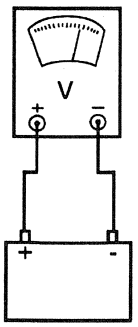 AF0201-A	2 Measure the voltage between the battery positive and negative posts. • Is the voltage greater than 17.5 volts? → **Yes** REPAIR the charging system. REFER to Section 414-00. → **No** REPLACE the control module. TEST the system for normal operation.

Ford Motor Company

DIAGNOSIS AND TESTING (Continued)

PINPOINT TEST F: DTC 25 — AIR SUSPENSION HEIGHT SENSOR SUPPLY NOT 5 VOLTS

TEST CONDITIONS	TEST DETAILS/RESULTS/ACTIONS
F1 CHECK AIR SUSPENSION HEIGHT SENSORS VOLTAGE SUPPLY	
1 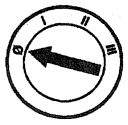 	
2	2 Turn the air suspension switch ON.
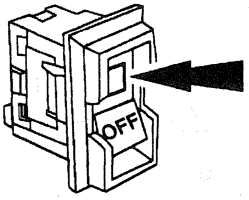 GF1440-A	
3 4 5 6 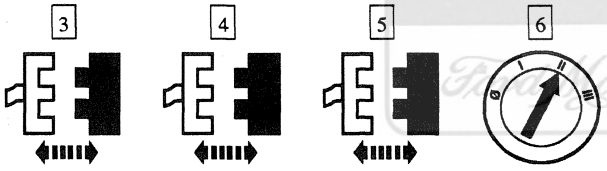 Air Suspension LH Front Height Sensor C181 Air Suspension RH Front Height Sensor C183 Air Suspension Rear Height Sensor C418	
7 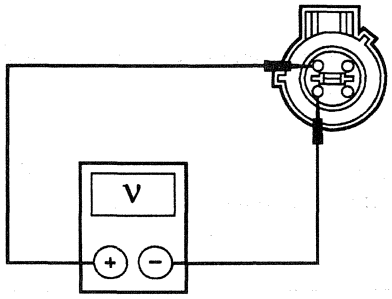 GF1441-A	7 Measure the voltage between air suspension LH front height sensor C181, circuit 431 (PK/W), and air suspension LH front height sensor C181, circuit 432 (BK/PK).

Official Licensed Product Ford Motor Company

(Continued)

DIAGNOSIS AND TESTING (Continued)

PINPOINT TEST F: DTC 25 — AIR SUSPENSION HEIGHT SENSOR SUPPLY NOT 5 VOLTS (Continued)

TEST CONDITIONS	TEST DETAILS/RESULTS/ACTIONS
F1 CHECK AIR SUSPENSION HEIGHT SENSORS VOLTAGE SUPPLY (Continued)	
8 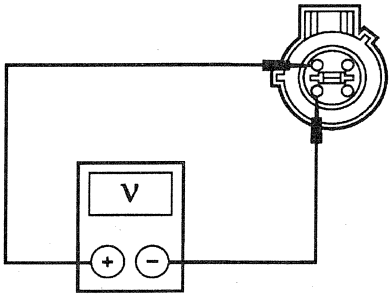 GF1441-A	8 Measure the voltage between air suspension RH front height sensor C183, circuit 431 (PK/W), and air suspension RH front height sensor C183, circuit 432 (BK/PK).
9 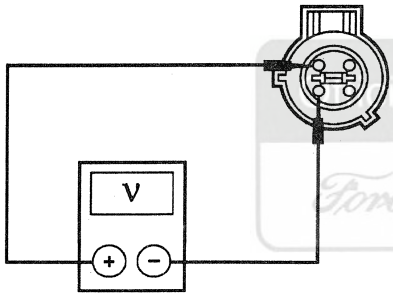 GF1442-A	9 Measure the voltage between air suspension rear height sensor C418, circuit 431 (PK/W), and air suspension rear height sensor C418, circuit 432 (BK/PK). • Are voltages present? → **Yes** GO to **F2**. → **No** GO to **F11**.

Ford Motor Company Official Licensed Product

(Continued)

DIAGNOSIS AND TESTING (Continued)

PINPOINT TEST F: DTC 25 — AIR SUSPENSION HEIGHT SENSOR SUPPLY NOT 5 VOLTS (Continued)

TEST CONDITIONS	TEST DETAILS/RESULTS/ACTIONS
F2 VERIFY VOLTAGE AT AIR SUSPENSION RH FRONT HEIGHT SENSOR	
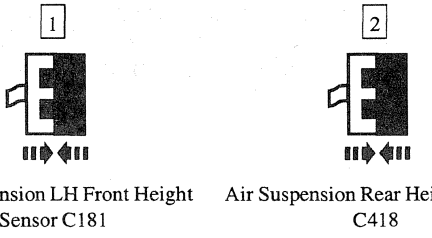 Air Suspension LH Front Height Sensor C181 — Air Suspension Rear Height Sensor C418 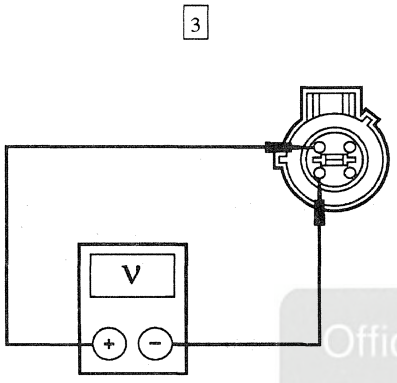 GF1441-A	3 Measure the voltage between air suspension RH front height sensor C183, circuit 431 (PK/W), and air suspension RH front height sensor C183, circuit 432 (BK/PK). • Is the voltage between 4.8 and 5.2 volts? → **Yes** GO to **F3**. → **No** If less than 4.8 volts, GO to **F4**. If greater than 5.2 volts, GO to **F7**.
F3 VERIFY VOLTAGE AT AIR SUSPENSION REAR HEIGHT SENSOR	
 Air Suspension RH Front Height Sensor C183 — Air Suspension Rear Height Sensor C418 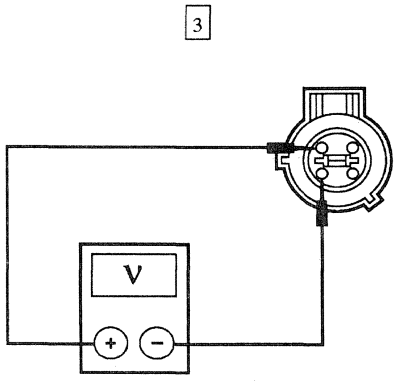 GF1442-A	3 Measure the voltage between air suspension rear height sensor C418, circuit 431 (PK/W), and air suspension rear height sensor C418, circuit 432 (BK/PK). • Is the voltage between 4.8 and 5.2 volts? → **Yes** REPLACE the air suspension control module; REFER to Control Module — Air Suspension. TEST the system for normal operation. → **No** REPLACE the air suspension RH front height sensor; REFER to Height Sensor. TEST the system for normal operation.

(Continued)

Official Licensed Product

DIAGNOSIS AND TESTING (Continued)

PINPOINT TEST F: DTC 25 — AIR SUSPENSION HEIGHT SENSOR SUPPLY NOT 5 VOLTS (Continued)

TEST CONDITIONS	TEST DETAILS/RESULTS/ACTIONS
F4 CHECK CIRCUIT 431 (PK/W) FOR SHORT TO GROUND	
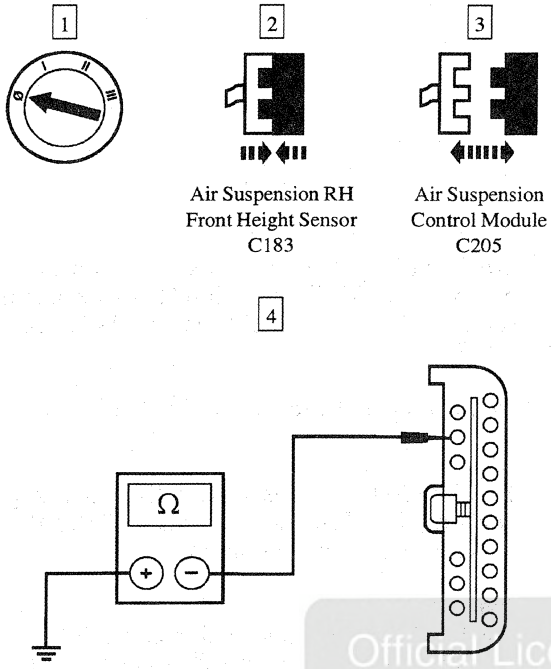	4 Measure the resistance between air suspension control module C205-28, circuit 431 (PK/W), and ground. • Is the resistance greater than 10,000 ohms? → **Yes** GO to **F5**. → **No** REPLACE the air suspension RH front height sensor; REFER to Height Sensor. TEST the system for normal operation.
F5 VERIFY VOLTAGE AT AIR SUSPENSION REAR HEIGHT SENSOR	
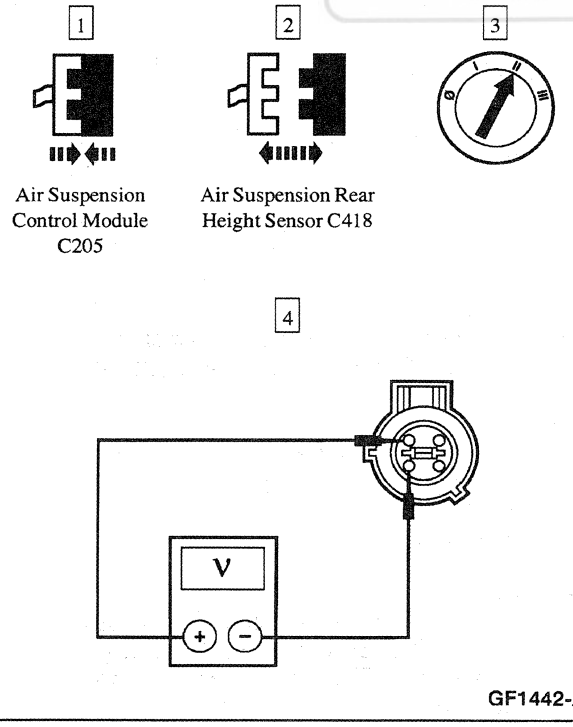	4 Measure the voltage between air suspension rear height sensor C418, circuit 431 (PK/W), and air suspension rear height sensor C418, circuit 432 (BK/PK). • Is the voltage between 4.8 and 5.2 volts? → **Yes** REPLACE the air suspension rear height sensor; REFER to Height Sensor. TEST the system for normal operation. → **No** GO to **F6**.

Official Licensed Product

(Continued)

DIAGNOSIS AND TESTING (Continued)

PINPOINT TEST F: DTC 25 — AIR SUSPENSION HEIGHT SENSOR SUPPLY NOT 5 VOLTS (Continued)

TEST CONDITIONS	TEST DETAILS/RESULTS/ACTIONS
F6 VERIFY VOLTAGE AT AIR SUSPENSION LH FRONT HEIGHT SENSOR	
1 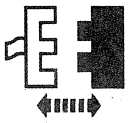 Air Suspension LH Front Height Sensor C181 2 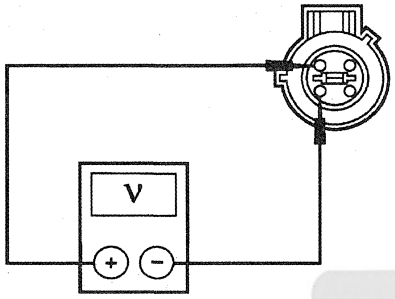 GF1441-A	2 Measure the voltage between air suspension LH front height sensor C181, circuit 431 (PK/W), and air suspension LH front height sensor C181, circuit 432 (BK/PK). • Is the voltage between 4.8 and 5.2 volts? → **Yes** REPLACE the air suspension LH front height sensor; REFER to Height Sensor. TEST the system for normal operation. → **No** REPLACE the air suspension control module; REFER to Control Module — Air Suspension. TEST the system for normal operation.
F7 CHECK CIRCUIT 431 (PK/W) FOR SHORT TO POWER	
1 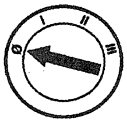 2 Air Suspension RH Front Height Sensor C183 3 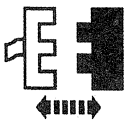 Air Suspension Control Module C205 4 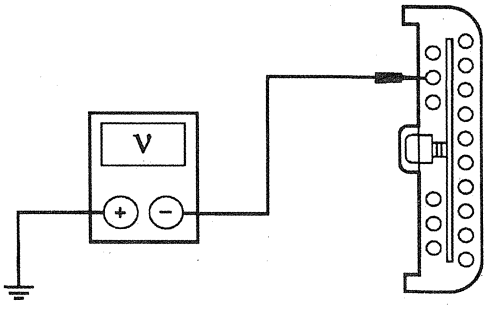 GF1444-A	4 Measure the voltage between air suspension control module C205-28, circuit 431 (PK/W), and ground. • Is any voltage indicated? → **Yes** GO to **F8**. → **No** REPLACE the air suspension control module; REFER to Control Module — Air Suspension. TEST the system for normal operation.

(Continued)

DIAGNOSIS AND TESTING (Continued)

PINPOINT TEST F: DTC 25 — AIR SUSPENSION HEIGHT SENSOR SUPPLY NOT 5 VOLTS (Continued)

TEST CONDITIONS	TEST DETAILS/RESULTS/ACTIONS
F8 CHECK AIR SUSPENSION RH FRONT HEIGHT SENSOR SHORT TO POWER	
1 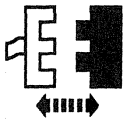 Air Suspension RH Front Height Sensor C183 2 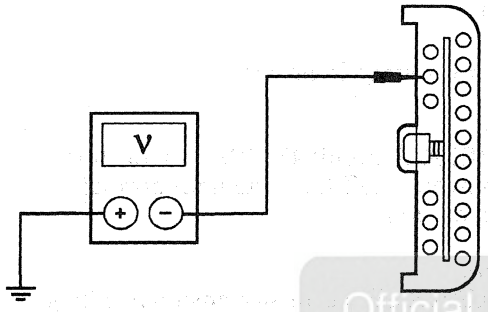 GF1444-A	2 Measure the voltage between air suspension control module C205-28, circuit 431 (PK/W), and ground. • Is any voltage indicated? → **Yes** GO to **F9**. → **No** REPLACE the air suspension RH front height sensor; REFER to Height Sensor. TEST the system for normal operation.
F9 CHECK AIR SUSPENSION LH FRONT HEIGHT SENSOR FOR SHORT TO POWER	
1 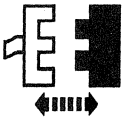 Air Suspension LH Front Height Sensor C181 2 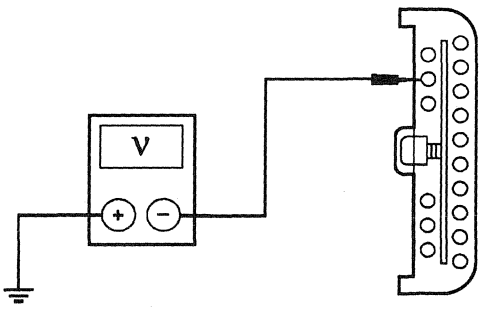 GF1444-A	2 Measure the voltage between air suspension control module C205-28, circuit 431 (PK/W), and ground. • Is any voltage indicated? → **Yes** GO to **F10**. → **No** REPLACE the air suspension LH front height sensor; REFER to Height Sensor. TEST the system for normal operation.

(Continued)

Official Licensed Product Ford Motor Company

DIAGNOSIS AND TESTING (Continued)

PINPOINT TEST F: DTC 25 — AIR SUSPENSION HEIGHT SENSOR SUPPLY NOT 5 VOLTS (Continued)

TEST CONDITIONS	TEST DETAILS/RESULTS/ACTIONS
F10 CHECK AIR SUSPENSION REAR HEIGHT SENSOR FOR SHORT TO POWER	
1 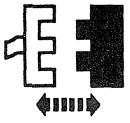 Air Suspension Rear Height Sensor C418 2 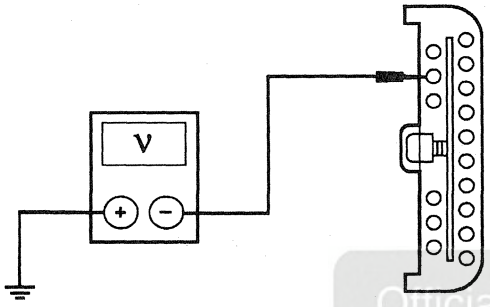 GF1444-A	2 Measure the voltage between air suspension control module C205-28, circuit 431 (PK/W), and ground. • Is any voltage indicated? → **Yes** REPAIR circuit 431 (PK/W) for short to power. TEST the system for normal operation. → **No** REPLACE the air suspension rear height sensor; REFER to Height Sensor. TEST the system for normal operation.

(Continued)

Official Licensed Product
Ford Motor Company

DIAGNOSIS AND TESTING (Continued)

PINPOINT TEST F: DTC 25 — AIR SUSPENSION HEIGHT SENSOR SUPPLY NOT 5 VOLTS (Continued)

TEST CONDITIONS	TEST DETAILS/RESULTS/ACTIONS
F11 CHECK CIRCUIT 432 (BK/PK) FOR OPEN	
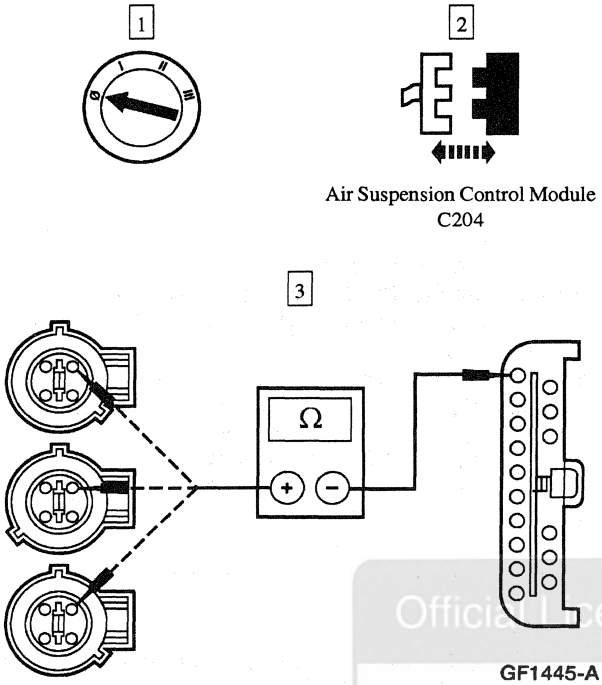	3 Measure the resistance between air suspension control module C204-10, circuit 432 (BK/PK), and air suspension LH front height sensor C181, circuit 432 (BK/PK); and between air suspension control module C204-10, circuit 432 (BK/PK), and air suspension RH front height sensor, C183, circuit 432 (BK/PK); and between air suspension control module C204-10, circuit 432 (BK/PK), and air suspension rear height sensor C418, circuit 432 (BK/PK). • Are the resistances less than 5 ohms? → **Yes** GO to **F12.** → **No** REPAIR circuit 432 (BK/PK). TEST the system for normal operation.

Official Licensed Product
Ford Motor Company

(Continued)

DIAGNOSIS AND TESTING (Continued)

PINPOINT TEST F: DTC 25 — AIR SUSPENSION HEIGHT SENSOR SUPPLY NOT 5 VOLTS (Continued)

TEST CONDITIONS	TEST DETAILS/RESULTS/ACTIONS
F12 CHECK CIRCUIT 431 (PK/W) FOR OPEN	
1 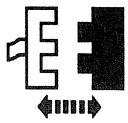 Air Suspension Control Module C205 2 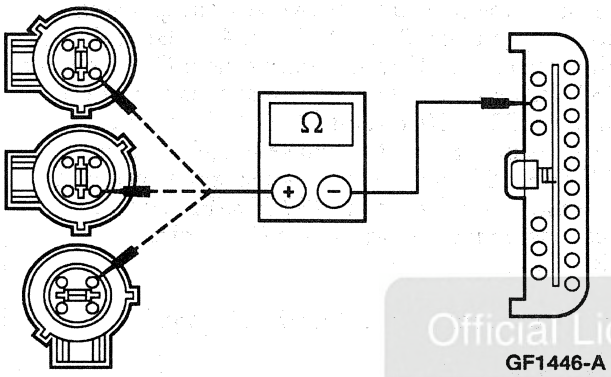 GF1446-A	2 Measure the resistance between air suspension control module C205-28, circuit 431 (PK/W), and air suspension LH front height sensor C181, circuit 431 (PK/W); and between air suspension control module C205-28, circuit 431 (PK/W), and air suspension RH front height sensor C183, circuit 431 (PK/W); and between air suspension control module C205-28, circuit 431 (PK/W), and air suspension rear height sensor C418, circuit 431 (PK/W). • Are the resistances less than 5 ohms? → **Yes** REPLACE the air suspension control module; REFER to Control Module — Air Suspension. TEST the system for normal operation. → **No** REPAIR circuit 431 (PK/W). TEST the system for normal operation.

Official Licensed Product
Ford Motor Company

DIAGNOSIS AND TESTING (Continued)

PINPOINT TEST G: DTC 29 — TWO DOOR CYCLES NOT DETECTED DURING TEST

TEST CONDITIONS	TEST DETAILS/RESULTS/ACTIONS
G1 CHECK FOR THE DOOR AJAR INPUT	
1 Air Suspension Control Module C204 2 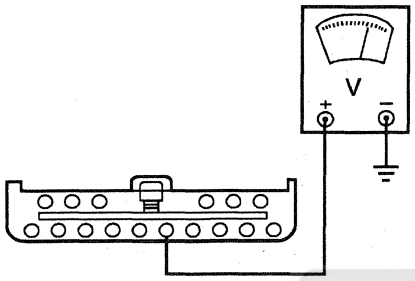 AF0206-A	2 Measure the voltage between air suspension control module C204-5, circuit 127 (BK/LB), and ground. 3 Open, then close the driver door. 4 Open, then close the passenger door. • Does 12 volts read on circuit 127 (BK/LB) with the doors open and less than 3 volts with the doors closed? → **Yes** REPLACE the air suspension control module; REFER to Control Module — Air Suspension. TEST the system for normal operation. → **No** GO to **G2**.

Official Licensed Product
Ford Motor Company

(Continued)

DIAGNOSIS AND TESTING (Continued)

PINPOINT TEST G: DTC 29 — TWO DOOR CYCLES NOT DETECTED DURING TEST (Continued)

TEST CONDITIONS	TEST DETAILS/RESULTS/ACTIONS
G2 CHECK CIRCUIT 127 (BK/LB) FOR SHORT TO GROUND	
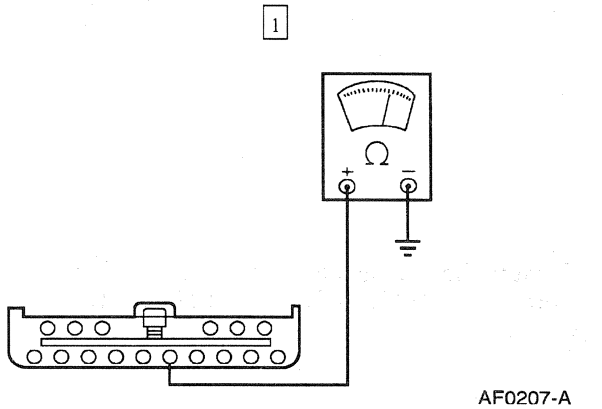 AF0207-A	1 Measure the resistance between control module C204-5, circuit 127 (BK/LB), and ground. • Is the resistance greater than 10,000 ohms? → **Yes** GO to **G3**. → **No** REPAIR circuit 127 (BK/LB). TEST the system for normal operation.
G3 CHECK CIRCUIT 127 (BK/LB) FOR AN OPEN	
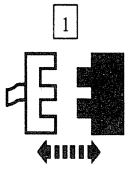 Steering Column/Ignition/Lighting (SCIL) Module C287 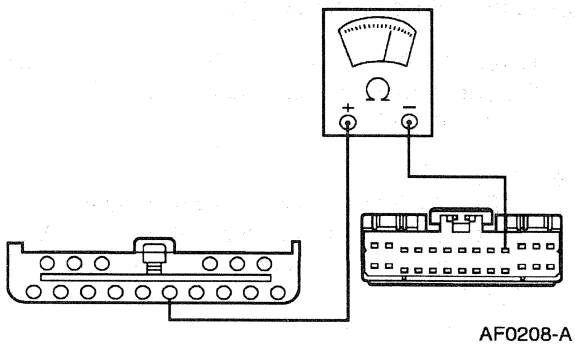 AF0208-A	2 Measure the resistance between SCIL module C287-10, circuit 127 (BK/LB), and air suspension control module C204-5, circuit 127 (BK/LB). • Is the resistance less than 5 ohms? → **Yes** REFER to Section 417-02. → **No** REPAIR circuit 127 (BK/LB). TEST the system for normal operation.

Official Licensed Product
Ford Motor Company

DIAGNOSIS AND TESTING (Continued)

PINPOINT TEST H: DTC 35 — EVO POWER STEERING CONTROL VALVE ACTUATOR CONCERN

TEST CONDITIONS	TEST DETAILS/RESULTS/ACTIONS
H1 CHECK THE ACTUATOR RESISTANCE	
1 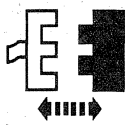 EVO Actuator C132	2 Measure the resistance between the EVO actuator terminals. • Is the resistance less than 8 ohms or more than 16 ohms? → **Yes** REPLACE the EVO actuator; REFER to Section 211-02. TEST the system for normal operation. → **No** GO to **H2**.
H2 CHECK CIRCUIT 330 (Y/LG) FOR SHORT TO POWER	
1 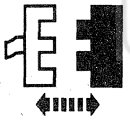 Air Suspension Control Module C205 2 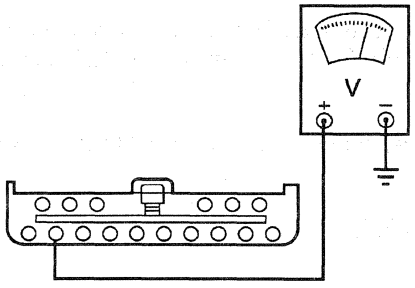 AF0209-A	2 Measure the voltage between air suspension control module C205-19, circuit 330 (Y/LG), and ground. • Is the voltage greater than 10 volts? → **Yes** REPAIR circuit 330 (Y/LG). TEST the system for normal operation. → **No** GO to **H3**.

Ford Motor Company

(Continued)

DIAGNOSIS AND TESTING (Continued)

PINPOINT TEST H: DTC 35 — EVO POWER STEERING CONTROL VALVE ACTUATOR CONCERN (Continued)

TEST CONDITIONS	TEST DETAILS/RESULTS/ACTIONS
H3 CHECK CIRCUIT 353 (LB) FOR SHORT TO POWER	
1 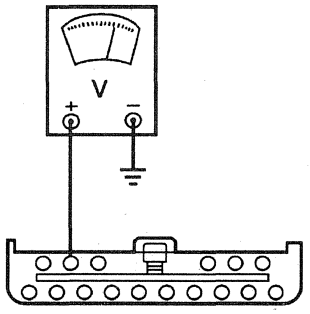 AF0210-A	1 Measure the voltage between air suspension control module C205-31, circuit 353 (LB), and ground. • Is the voltage greater than 10 volts? → **Yes** REPAIR circuit 353 (LB). TEST the system for normal operation. → **No** GO to **H4**.
H4 CHECK CIRCUIT 330 (Y/LG) FOR SHORT TO GROUND	
1 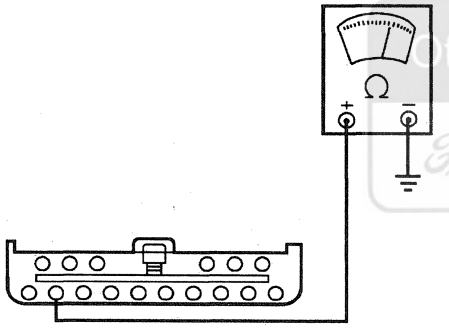 AF0211-A	1 Measure the resistance between air suspension control module C205-19, circuit 330 (Y/LG), and ground. • Is the resistance greater than 10,000 ohms? → **Yes** GO to **H5**. → **No** REPAIR circuit 330 (Y/LG). TEST the system for normal operation.
H5 CHECK CIRCUIT 353 (LB) FOR SHORT TO GROUND	
1 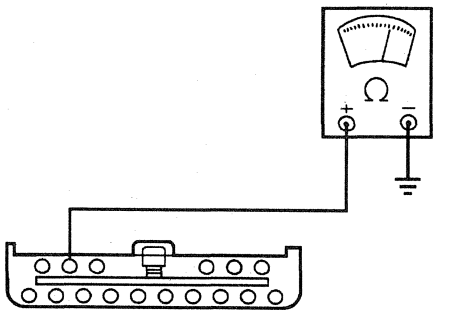 AF0212-A	1 Measure the resistance between air suspension control module C205-31, circuit 353 (LB), and ground. • Is the resistance greater than 10,000 ohms? → **Yes** GO to **H6**. → **No** REPAIR circuit 353 (LB). TEST the system for normal operation.

(Continued)

Official Licensed Product Ford Motor Company

DIAGNOSIS AND TESTING (Continued)

PINPOINT TEST H: DTC 35 — EVO POWER STEERING CONTROL VALVE ACTUATOR CONCERN (Continued)

TEST CONDITIONS	TEST DETAILS/RESULTS/ACTIONS
H6 CHECK FOR SHORT BETWEEN CIRCUIT 330 (Y/LG) AND CIRCUIT 353 (LB)	
1 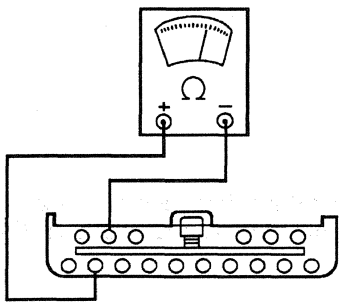 AF0213-A	1 Measure the resistance between air suspension control module C205-19, circuit 330 (Y/LG) and control module C205-31, circuit 353 (LB). • Is the resistance less than 5 ohms? → **Yes** REPAIR short between circuit 330 (Y/LG) and circuit 353 (LB). TEST the system for normal operation. → **No** GO to **H7**.
H7 CHECK THE END-TO-END RESISTANCE OF CIRCUIT 330 (Y/LG)	
1 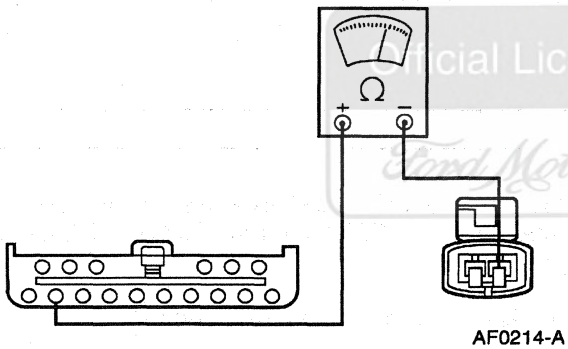 AF0214-A	1 Measure the resistance between air suspension control module C205-19, circuit 330 (Y/LG), and EVO actuator C132, circuit 330 (Y/LG). • Is the resistance less than 5 ohms? → **Yes** GO to **H8**. → **No** REPAIR circuit 330 (Y/LG). TEST the system for normal operation.
H8 CHECK THE END-TO-END RESISTANCE OF CIRCUIT 353 (LB)	
1 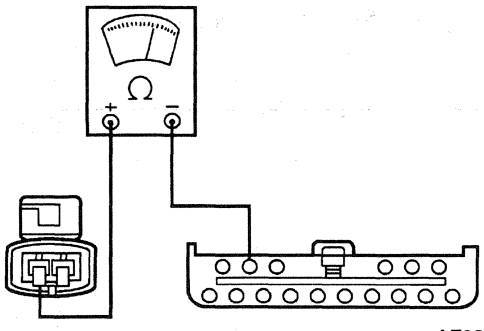 AF0215-A	1 Measure the resistance between air suspension control module C205-31, circuit 353 (LB), and EVO actuator C132, circuit 353 (LB). • Is the resistance less than 5 ohms? → **Yes** INSPECT the pins in C205 and C132. CLEAN/REPAIR the connectors as required. TEST the system for normal operation. If DTC 35 is retrieved, REPLACE the air suspension control module; REFER to Control Module — Air Suspension. TEST the system for normal operation. → **No** REPAIR circuit 353 (LB). TEST the system for normal operation.

Official Licensed Product Ford Motor Company

DIAGNOSIS AND TESTING (Continued)

PINPOINT TEST J: DTC 45 — STEERING WHEEL ROTATION NOT DETECTED

TEST CONDITIONS	TEST DETAILS/RESULTS/ACTIONS
J1 CHECK THE SUPPLY CIRCUIT 298 (P/O)	
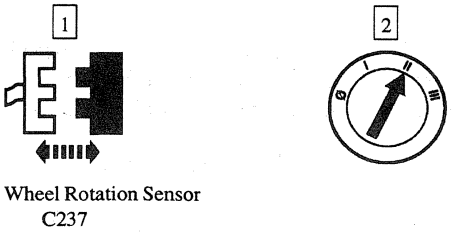 Steering Wheel Rotation Sensor C237 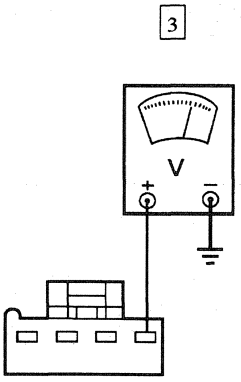 AF0240-A	3 Measure the voltage between steering wheel rotation sensor C237-4, circuit 298 (P/O), and ground. • Is the voltage greater than 10 volts? → **Yes** GO to **J3**. → **No** GO to **J2**.
J2 CHECK THE GROUND CIRCUIT 938 (BK/LG)	
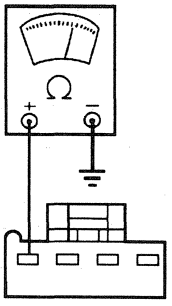 AF0241-A	1 Measure the resistance between steering wheel rotation sensor C237-1, circuit 938 (BK/LG), and ground. • Is the resistance less than 5 ohms? → **Yes** GO to **J3**. → **No** REPAIR circuit 938 (BK/LG). TEST the system for normal operation.

Official Licensed Product Ford Motor Company

(Continued)

DIAGNOSIS AND TESTING (Continued)

PINPOINT TEST J: DTC 45 — STEERING WHEEL ROTATION NOT DETECTED (Continued)

TEST CONDITIONS	TEST DETAILS/RESULTS/ACTIONS
J3 CHECK CIRCUIT 633 (R) INPUT TO THE AIR SUSPENSION CONTROL MODULE	
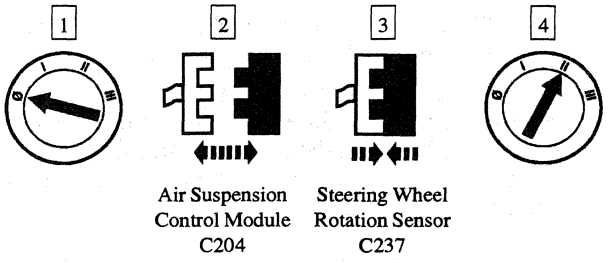	5 Place the digital multimeter in the diode check position.
6 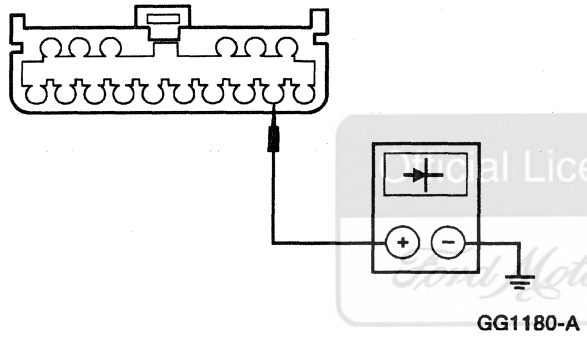	6 **NOTE:** Touch the digital multimeter leads together to be sure the audio (beep) function is operational. **NOTE:** The digital Multimeter should beep several times while rotating the steering wheel. Connect the digital multimeter leads between air suspension control module C204-22, circuit 634 (BR), and ground, and listen for an audible beep while slowly turning the steering wheel one quarter turn in each direction. • Does the digital multimeter beep several times as the steering wheel is rotated in both directions? → **Yes** GO to **J4**. → **No** GO to **J5**.

(Continued)

DIAGNOSIS AND TESTING (Continued)

PINPOINT TEST J: DTC 45 — STEERING WHEEL ROTATION NOT DETECTED (Continued)

TEST CONDITIONS	TEST DETAILS/RESULTS/ACTIONS
J4 CHECK CIRCUIT 634 (BR) INPUT TO THE AIR SUSPENSION CONTROL MODULE	
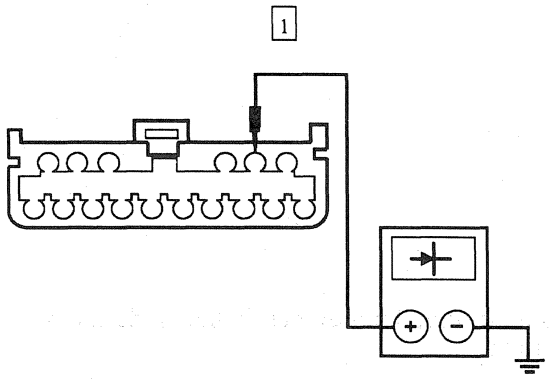 GG1181-A	1 **NOTE:** The digital multimeter should beep several times while rotating the steering wheel. Connect the digital multimeter leads between air suspension control module C204-22, circuit 634 (BR), and ground, and listen for an audible beep while slowly turning the steering wheel one quarter turn in each direction. • Does the digital multimeter beep several times as the steering wheel is rotated in both directions? → **Yes** REPLACE the air suspension control module; REFER to Control Module — Air Suspension. TEST the system for normal operation. → **No** GO to **J6**.
J5 CHECK CIRCUIT 633 (R) FOR SHORT TO POWER	
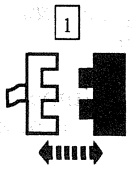 Steering Wheel Rotation Sensor C237 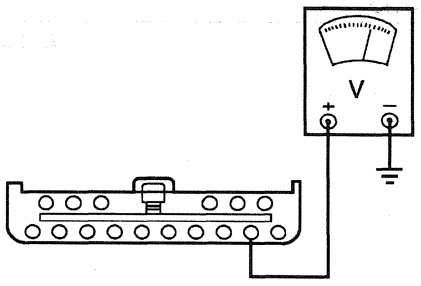 AF0242-A	2 Measure the voltage between air suspension control module C204-2, circuit 633 (R), and ground. • Is the voltage greater than 10 volts? → **Yes** REPAIR circuit 633 (R). TEST the system for normal operation. → **No** GO to **J7**.

Official Licensed Product Ford Motor Company

(Continued)

DIAGNOSIS AND TESTING (Continued)

PINPOINT TEST J: DTC 45 — STEERING WHEEL ROTATION NOT DETECTED (Continued)

TEST CONDITIONS	TEST DETAILS/RESULTS/ACTIONS
J6 CHECK CIRCUIT 634 (BR) FOR SHORT TO POWER	
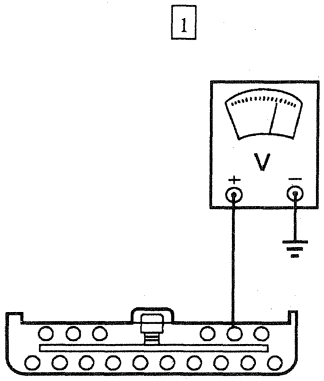 AF0243-A	1 Measure the voltage between air suspension control module C204-22, circuit 634 (BR), and ground. • Is the voltage greater than 10 volts? → **Yes** REPAIR circuit 634 (BR).TEST the system for normal operation. → **No** GO to **J8**.
J7 CHECK CIRCUIT 633 (R) FOR SHORT TO GROUND	
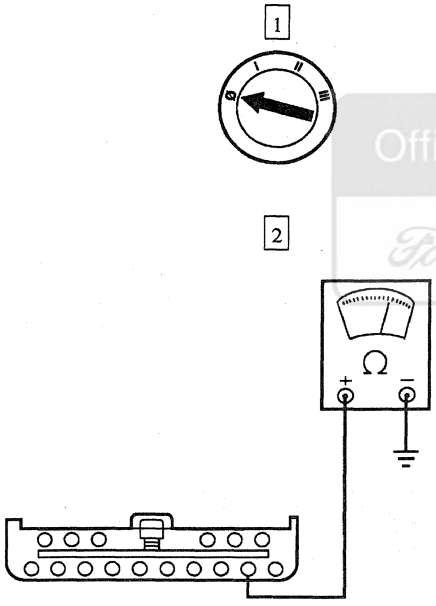 AF0244-A	2 Measure the resistance between air suspension control module C204-2, circuit 633 (R), and ground. • Is the resistance greater than 10,000 ohms? → **Yes** GO to **J9**. → **No** REPAIR circuit 633 (R). TEST the system for normal operation.

Official Licensed Product
Ford Motor Company

(Continued)

DIAGNOSIS AND TESTING (Continued)

PINPOINT TEST J: DTC 45 — STEERING WHEEL ROTATION NOT DETECTED (Continued)

TEST CONDITIONS	TEST DETAILS/RESULTS/ACTIONS
J8 CHECK CIRCUIT 634 (BR) FOR SHORT TO GROUND	
1 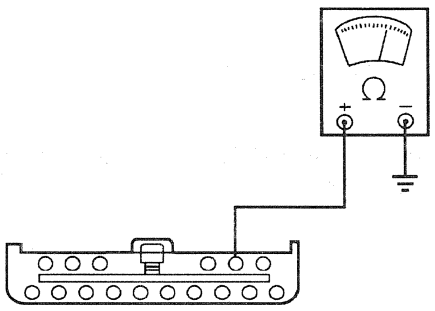 AF0245-A	1 Measure the resistance between air suspension control module C204-22, circuit 634 (BR), and ground. • Is the resistance greater than 10,000 ohms? → **Yes** GO to **J10**. → **No** REPAIR circuit 634 (BR). TEST the system for normal operation.
J9 CHECK THE RESISTANCE OF CIRCUIT 633 (R) BETWEEN C204 AND C237	
1 Steering Wheel Rotation Sensor C237 2 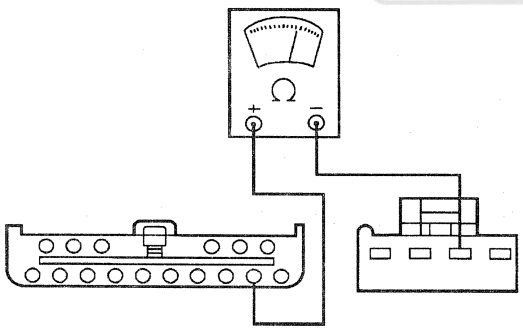 AF0246-A	2 Measure the resistance between air suspension control module C204-2, circuit 633 (R), and steering wheel rotation sensor C237-3, circuit 633 (R). • Is the resistance less than 5 ohms? → **Yes** REPLACE the steering wheel rotation sensor; REFER to Section 211-02. TEST the system for normal operation. → **No** REPAIR circuit 633 (R). TEST the system for normal operation.

(Continued)

Official Licensed Product
Ford Motor Company

DIAGNOSIS AND TESTING (Continued)

PINPOINT TEST J: DTC 45 — STEERING WHEEL ROTATION NOT DETECTED (Continued)

TEST CONDITIONS	TEST DETAILS/RESULTS/ACTIONS
J10 CHECK THE RESISTANCE OF CIRCUIT 634 (BR) BETWEEN C204 AND C237	
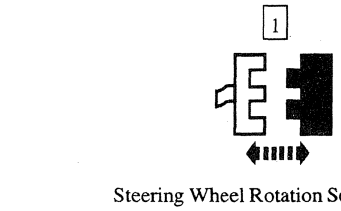 Steering Wheel Rotation Sensor C237 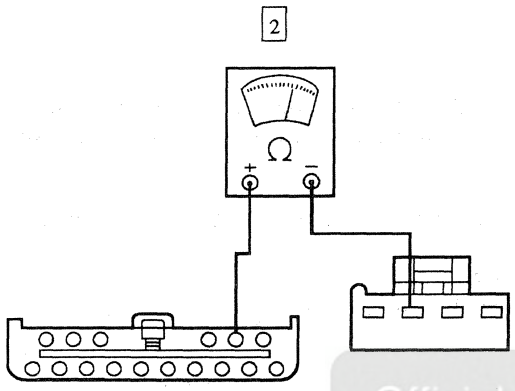 AF0247-A	2 Measure the resistance between air suspension control module C204-22, circuit 634 (BR), and steering wheel rotation sensor C237-2, circuit 634 (BR). • Is the resistance less than 5 ohms? → **Yes** REPLACE the steering wheel rotation sensor; REFER to Section 211-02. TEST the system for normal operation. → **No** REPAIR circuit 634 (BR). TEST the system for normal operation.

Official Licensed Publication
Ford Motor Company

DIAGNOSIS AND TESTING (Continued)

PINPOINT TEST K: DTC 50 — LH FRONT AIR SUSPENSION HEIGHT SENSOR SIGNAL OUT OF RANGE

TEST CONDITIONS	TEST DETAILS/RESULTS/ACTIONS
K1 CHECK CIRCUIT 422 (PK/BK) FOR SHORT TO GROUND	
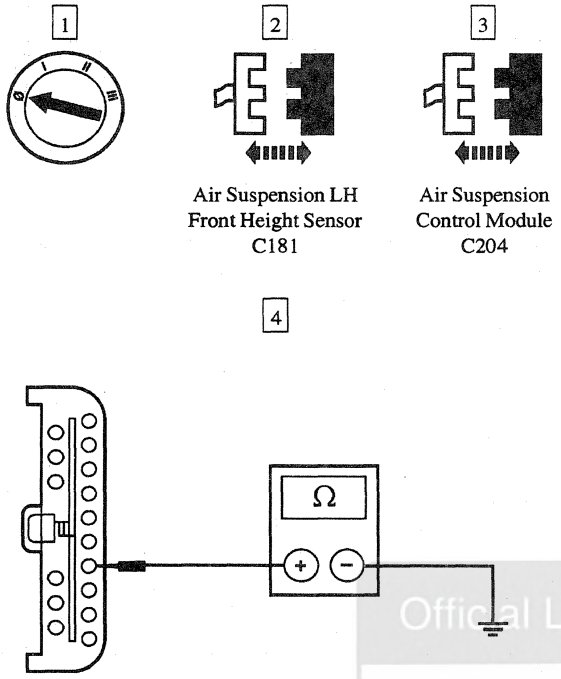	4 Measure the resistance between air suspension control module C204-7, circuit 422 (PK/BK), and ground. • Is the resistance greater than 10,000 ohms? → **Yes** GO to **K2**. → **No** REPAIR circuit 422 (PK/BK). TEST the system for normal operation.
K2 CHECK AIR SUSPENSION LH FRONT HEIGHT SENSOR FOR SHORT TO GROUND	
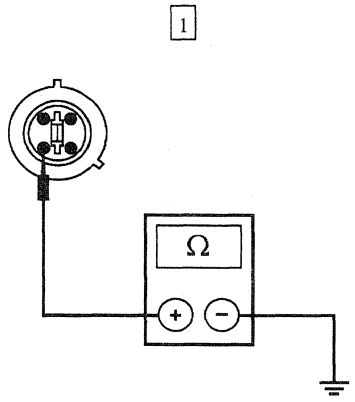	1 Measure the resistance between air suspension LH front height sensor C181 (component side), circuit 422 (PK/BK), and ground. • Is the resistance greater than 10,000 ohms? → **Yes** REPLACE the air suspension LH front height sensor; REFER to Height Sensor. TEST the system for normal operation. → **No** GO to **K3**.

(Continued)

Official Licensed Product

DIAGNOSIS AND TESTING (Continued)

PINPOINT TEST K: DTC 50 — LH FRONT AIR SUSPENSION HEIGHT SENSOR SIGNAL OUT OF RANGE (Continued)

TEST CONDITIONS	TEST DETAILS/RESULTS/ACTIONS
K3 CHECK CIRCUIT 422 (PK/BK) FOR SHORT TO POWER	
1 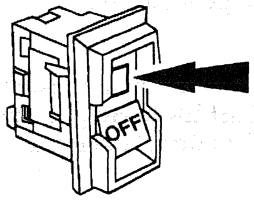 GF1440-A	1 Turn the air suspension switch ON.
2 	
3 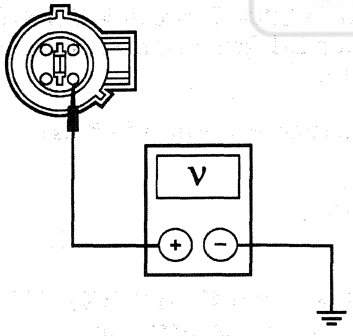 GF1448-A	3 Measure the voltage between air suspension LH front height sensor C181, circuit 422 (PK/BK), and ground. • Is any voltage indicated? → **Yes** REPAIR circuit 422 (PK/BK). TEST the system for normal operation. → **No** GO to **K4**.

(Continued)

Official Licensed Product
Ford Motor Company®

DIAGNOSIS AND TESTING (Continued)

PINPOINT TEST K: DTC 50 — LH FRONT AIR SUSPENSION HEIGHT SENSOR SIGNAL OUT OF RANGE (Continued)

TEST CONDITIONS	TEST DETAILS/RESULTS/ACTIONS
K4 CHECK AIR SUSPENSION LH FRONT HEIGHT SENSOR FOR SHORT TO POWER	
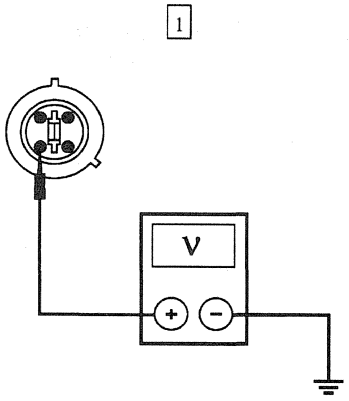	1 Measure the voltage between air suspension LH front height sensor C181 (component side) circuit 422 (PK/BK), and ground. • Is any voltage indicated? → **Yes** REPLACE the air suspension LH front height sensor; REFER to Height Sensor. TEST the system for normal operation. → **No** GO to **K5**.
K5 CHECK CIRCUIT 422 (PK/BK) FOR OPEN	
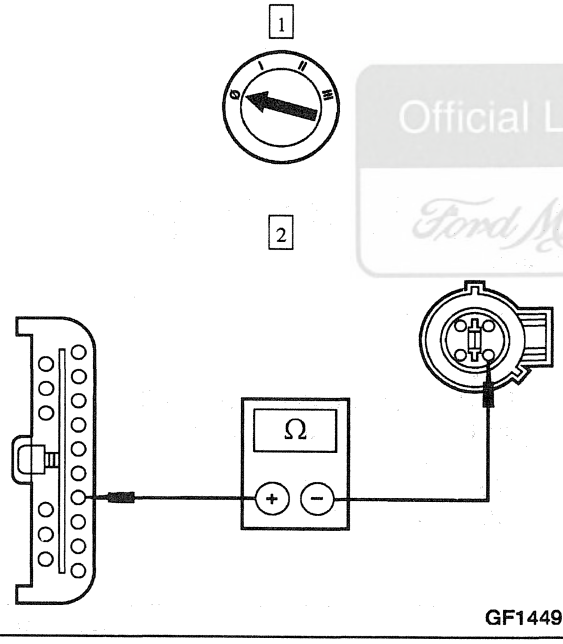	2 Measure the resistance between air suspension control module C204-7, circuit 422 (PK/BK), and air suspension LH front height sensor C181, circuit 422 (PK/BK). • Is the resistance less than 5 ohms? → **Yes** GO to **K6**. → **No** REPAIR circuit 422 (PK/BK). TEST the system for normal operation.

Official Licensed Product
Ford Motor Company

(Continued)

DIAGNOSIS AND TESTING (Continued)

PINPOINT TEST K: DTC 50 — LH FRONT AIR SUSPENSION HEIGHT SENSOR SIGNAL OUT OF RANGE (Continued)

TEST CONDITIONS	TEST DETAILS/RESULTS/ACTIONS
K6 CHECK POWER SUPPLY	
1 2 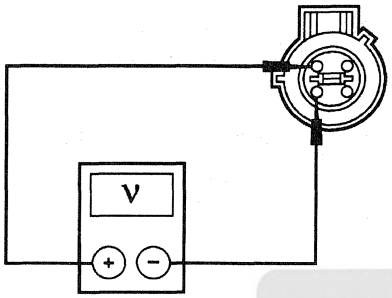 GF1441-A	2 Measure the voltage between air suspension LH front height sensor C181, circuit 431 (PK/W), and air suspension LH front height sensor C181, circuit 432 (BK/PK). • Is the voltage between 4.8 and 5.2 volts? → **Yes** REPLACE the air suspension LH front height sensor; REFER to Height Sensor. TEST the system for normal operation. → **No** REFER to Pinpoint Test F.

Official Licensed Product
Ford Motor Company

DIAGNOSIS AND TESTING (Continued)

PINPOINT TEST L: DTC 55 — RH FRONT AIR SUSPENSION HEIGHT SENSOR SIGNAL OUT OF RANGE

TEST CONDITIONS	TEST DETAILS/RESULTS/ACTIONS
L1 CHECK CIRCUIT 424 (T) FOR SHORT TO GROUND	
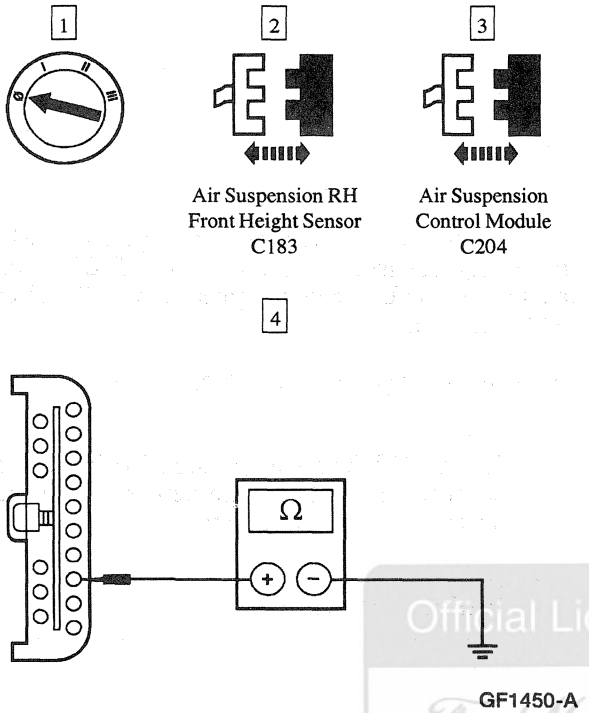	4 Measure the resistance between air suspension control module C204-8, circuit 424 (T), and ground. • Is the resistance greater than 10,000 ohms? → **Yes** GO to **L2**. → **No** REPAIR circuit 424 (T). TEST the system for normal operation.
L2 CHECK AIR SUSPENSION RH FRONT HEIGHT SENSOR FOR SHORT TO GROUND	
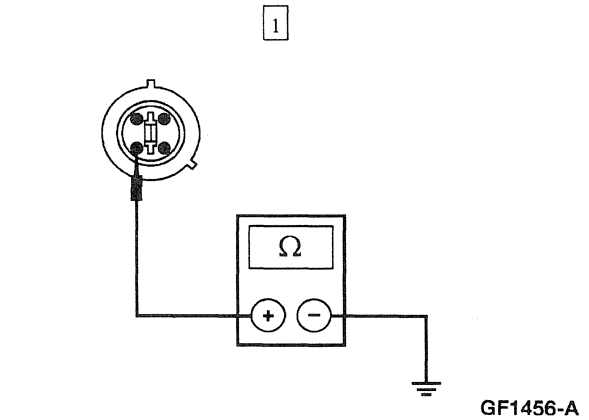	1 Measure the resistance between air suspension RH front height sensor C183 (component side), circuit 424 (T), and ground. • Is the resistance greater than 10,000 ohms? → **Yes** REPLACE the air suspension RH front height sensor; REFER to Height Sensor. TEST the system for normal operation. → **No** GO to **L3**.

(Continued)

Official Licensed

DIAGNOSIS AND TESTING (Continued)

PINPOINT TEST L: DTC 55 — RH FRONT AIR SUSPENSION HEIGHT SENSOR SIGNAL OUT OF RANGE (Continued)

TEST CONDITIONS	TEST DETAILS/RESULTS/ACTIONS
L3 CHECK CIRCUIT 424 (T) FOR SHORT TO POWER	
1 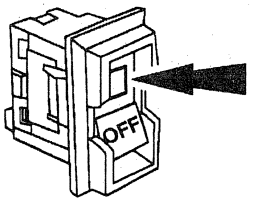 GF1440-A	1 Turn the air suspension switch ON.
2 	
3 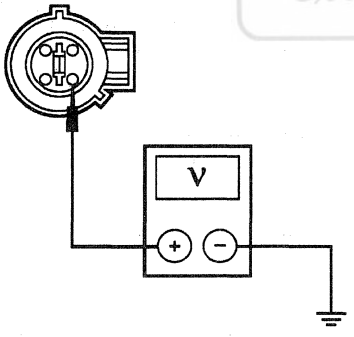 GF1448-A	3 Measure the voltage between air suspension RH front height sensor C183, circuit 424 (T), and ground. • Is any voltage indicated? → **Yes** REPAIR circuit 424 (T). TEST the system for normal operation. → **No** GO to **L4**.

(Continued)

Official Licensed Product
Ford Motor Company®

DIAGNOSIS AND TESTING (Continued)

PINPOINT TEST L: DTC 55 — RH FRONT AIR SUSPENSION HEIGHT SENSOR SIGNAL OUT OF RANGE (Continued)

TEST CONDITIONS	TEST DETAILS/RESULTS/ACTIONS
L4 CHECK AIR SUSPENSION RH FRONT HEIGHT SENSOR FOR SHORT TO POWER	
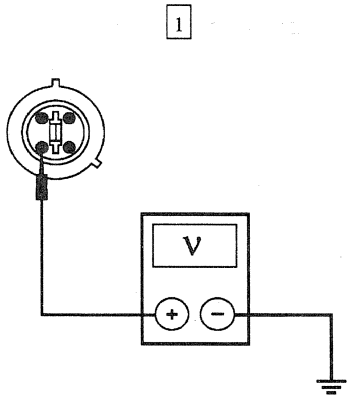	1 Measure the voltage between air suspension RH front height sensor C183 (component side), circuit 424 (T), and ground. • Is any voltage indicated? → **Yes** REPLACE the air suspension RH front height sensor; REFER to Height Sensor. TEST the system for normal operation. → **No** GO to **L5**.
L5 CHECK CIRCUIT 424 (T) FOR OPEN	
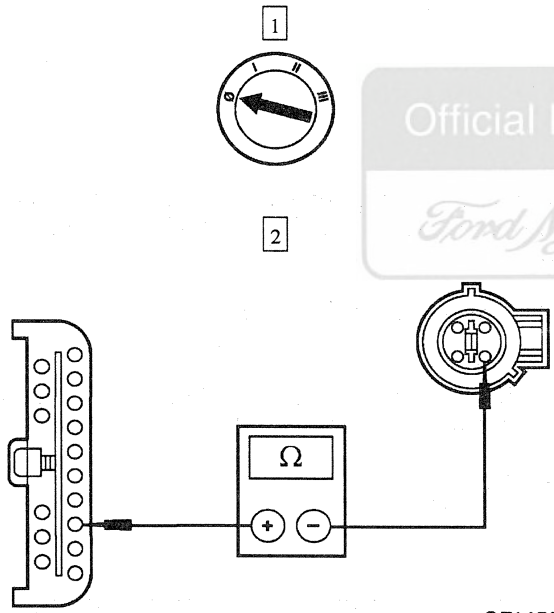	2 Measure the resistance between air suspension control module C204-8, circuit 424 (T), and air suspension RH front height sensor C183, circuit 424 (T). • Is the resistance less than 5 ohms? → **Yes** GO to **L6**. → **No** REPAIR circuit 424 (T). TEST the system for normal operation.

Official Licensed Product
Ford Motor Company

(Continued)

DIAGNOSIS AND TESTING (Continued)

PINPOINT TEST L: DTC 55 — RH FRONT AIR SUSPENSION HEIGHT SENSOR SIGNAL OUT OF RANGE (Continued)

TEST CONDITIONS	TEST DETAILS/RESULTS/ACTIONS
L6 CHECK POWER SUPPLY	
1 2 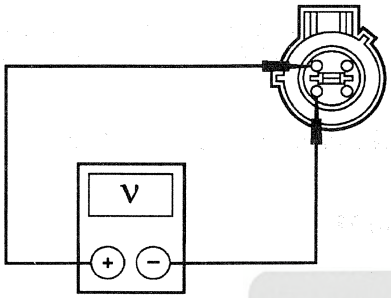 GF1441-A	2 Measure the voltage between air suspension RH front height sensor C183, circuit 431 (PK/W), and air suspension RH front height sensor C183, circuit 432 (BK/PK). • Is the voltage between 4.8 and 5.2 volts? → **Yes** REPLACE the air suspension RH front height sensor; REFER to Height Sensor. TEST the system for normal operation. → **No** REFER to Pinpoint Test F.

Officially Licensed Product
Ford Motor Company

DIAGNOSIS AND TESTING (Continued)

PINPOINT TEST M: DTC 60 — LH REAR AIR SUSPENSION HEIGHT SENSOR SIGNAL OUT OF RANGE

TEST CONDITIONS	TEST DETAILS/RESULTS/ACTIONS
M1 CHECK CIRCUIT 428 (O/BK) FOR SHORT TO GROUND	
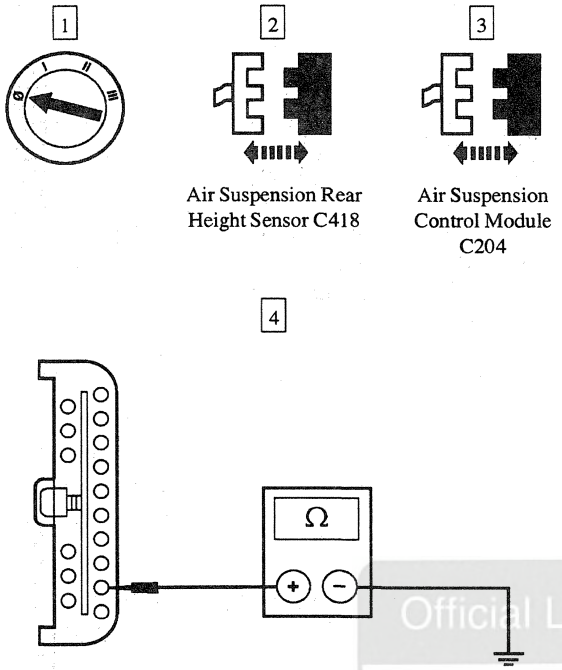	4 Measure the resistance between air suspension control module C204-9, circuit 428 (O/BK), and ground. • Is the resistance greater than 10,000 ohms? → **Yes** GO to **M2**. → **No** REPAIR circuit 428 (O/BK). TEST the system for normal operation.
M2 CHECK AIR SUSPENSION REAR HEIGHT SENSOR FOR SHORT TO GROUND	
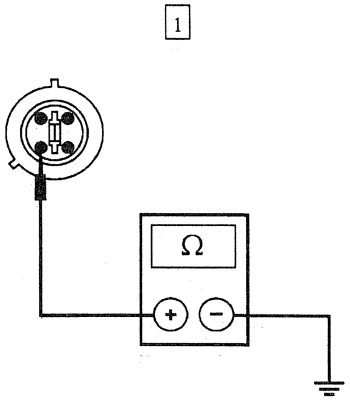	1 Measure the resistance between air suspension rear height sensor C418 (component side), circuit 428 (O/BK), and ground. • Is the resistance greater than 10,000 ohms? → **Yes** REPLACE the air suspension rear height sensor; REFER to Height Sensor. TEST the system for normal operation. → **No** GO to **M3**.

(Continued)

Official Licensed Reproduction

DIAGNOSIS AND TESTING (Continued)

PINPOINT TEST M: DTC 60 — LH REAR AIR SUSPENSION HEIGHT SENSOR SIGNAL OUT OF RANGE (Continued)

TEST CONDITIONS	TEST DETAILS/RESULTS/ACTIONS
M3 CHECK CIRCUIT 428 (O/BK) FOR SHORT TO POWER	
1 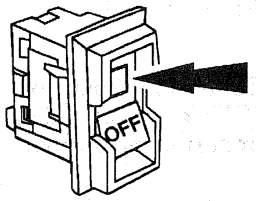 GF1440-A	1 Turn the air suspension switch ON.
2 	
3 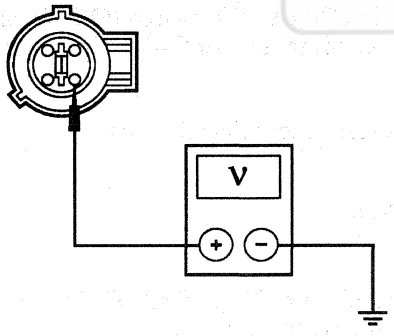 GF1454-A	3 Measure the voltage between air suspension rear height sensor C418, circuit 428 (O/BK), and ground. • Is any voltage indicated? → **Yes** REPAIR circuit 428 (O/BK). TEST the system for normal operation. → **No** GO to **M4**.

Official Licensed Product
Ford Motor Company

(Continued)

DIAGNOSIS AND TESTING (Continued)

PINPOINT TEST M: DTC 60 — LH REAR AIR SUSPENSION HEIGHT SENSOR SIGNAL OUT OF RANGE (Continued)

TEST CONDITIONS	TEST DETAILS/RESULTS/ACTIONS
M4 CHECK AIR SUSPENSION REAR HEIGHT SENSOR FOR SHORT TO POWER	
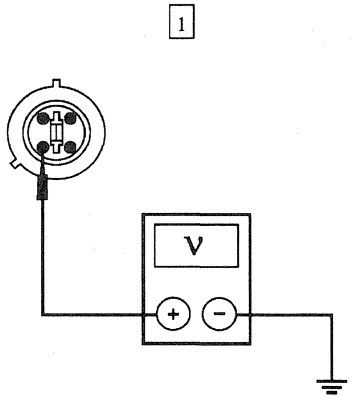 GF1459-A	1 Measure the voltage between air suspension rear height sensor C418 (component side) circuit 428 (O/BK), and ground. • Is any voltage indicated? → **Yes** REPLACE the air suspension rear height sensor; REFER to Height Sensor. TEST the system for normal operation. → **No** GO to **M5**.
M5 CHECK CIRCUIT 428 (O/BK) FOR OPEN	
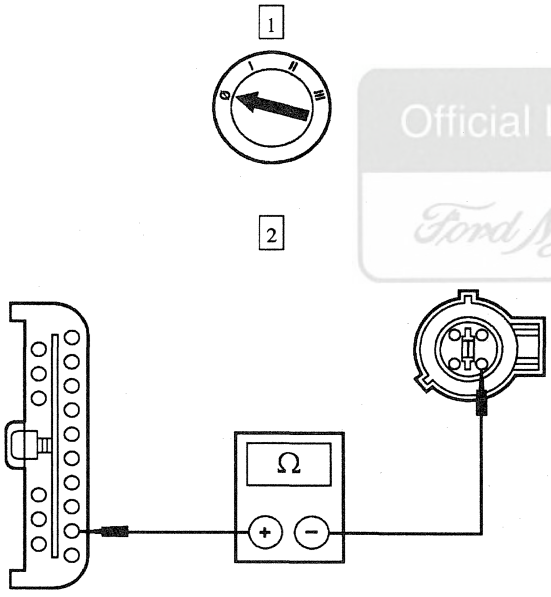 GF1455-A	2 Measure the resistance between air suspension control module C204-9, circuit 428 (O/BK), and air suspension rear height sensor C418, circuit 428 (O/BK). • Is the resistance less than 5 ohms? → **Yes** GO to **M6**. → **No** REPAIR circuit 428 (O/BK). TEST the system for normal operation.

Official Licensed Product
Ford Motor Company

(Continued)

DIAGNOSIS AND TESTING (Continued)

PINPOINT TEST M: DTC 60 — LH REAR AIR SUSPENSION HEIGHT SENSOR SIGNAL OUT OF RANGE (Continued)

TEST CONDITIONS	TEST DETAILS/RESULTS/ACTIONS
M6 CHECK POWER SUPPLY	
1 2 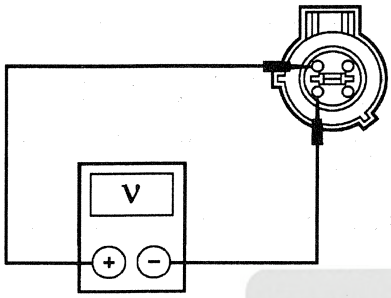 GF1442-A	2 Measure the voltage between air suspension rear height sensor C418, circuit 431 (PK/W), and air suspension rear height sensor C418, circuit 432 (BK/PK). • Is the voltage between 4.8 and 5.2 volts? → **Yes** REPLACE the air suspension rear height sensor; REFER to Height Sensor. TEST the system for normal operation. → **No** REFER to Pinpoint Test F.

Official Licensed Product Ford Motor Company

PINPOINT TEST N: DTC 70 — VENT SOLENOID VALVE

TEST CONDITIONS	TEST DETAILS/RESULTS/ACTIONS
N1 CHECK THE VENT SOLENOID CONNECTOR FOR DAMAGE	
1 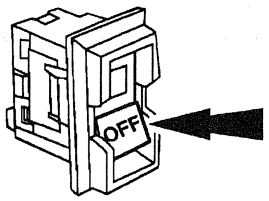 GF1439-A 2 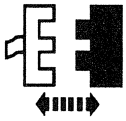 Air Compressor Vent Solenoid and Motor C134	1 Turn the air suspension switch OFF.

(Continued)

DIAGNOSIS AND TESTING (Continued)

PINPOINT TEST N: DTC 70 — VENT SOLENOID VALVE (Continued)

TEST CONDITIONS	TEST DETAILS/RESULTS/ACTIONS
N1 CHECK THE VENT SOLENOID CONNECTOR FOR DAMAGE (Continued)	
	3 Check the terminals for damage, corrosion or pushed out pins. • Are the connectors worn or damaged? → **Yes** REPAIR or REPLACE them as required. TEST the system for normal operation. → **No** GO to **N2**.
N2 CHECK THE VENT SOLENOID FOR AN INTERNAL OPEN	
1 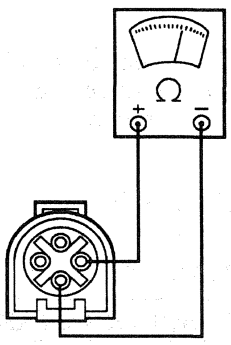 AF0235-A	1 Measure the resistance between air compressor vent solenoid and motor C134, circuit 421 (PK), and air compressor vent solenoid and motor C134, circuit 57 (BK). • Is the resistance between 19 and 24 ohms? → **Yes** GO to **N3**. → **No** REPLACE the air compressor; REFER to Air Compressor. TEST the system for normal operation.
N3 CHECK CIRCUIT 57 (BK) FOR AN OPEN	
1 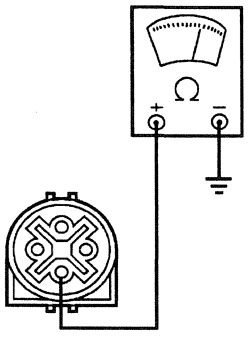 AF0236-A	1 Measure the resistance between air compressor vent solenoid and motor C134, circuit 57 (BK) (harness side), and ground. • Is the resistance less than 5 ohms? → **Yes** GO to **N4**. → **No** REPAIR circuit 57 (BK). TEST the system for normal operation.

(Continued)

Official Licensed Product Ford Motor Company

DIAGNOSIS AND TESTING (Continued)

PINPOINT TEST N: DTC 70 — VENT SOLENOID VALVE (Continued)

TEST CONDITIONS	TEST DETAILS/RESULTS/ACTIONS
N4 CHECK CIRCUIT 421 (PK) FOR SHORT TO POWER	
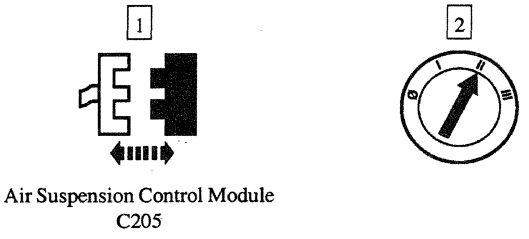 Air Suspension Control Module C205 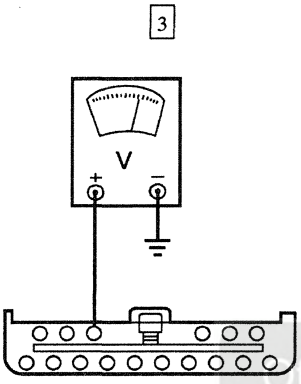 AF0237-A	3 Measure the voltage between air suspension control module C205-30, circuit 421 (PK), and ground. • Is any voltage indicated? → **Yes** REPAIR circuit 421 (PK). TEST the system for normal operation. → **No** GO to **N5**.
N5 CHECK CIRCUIT 421 (PK) FOR SHORT TO GROUND	
  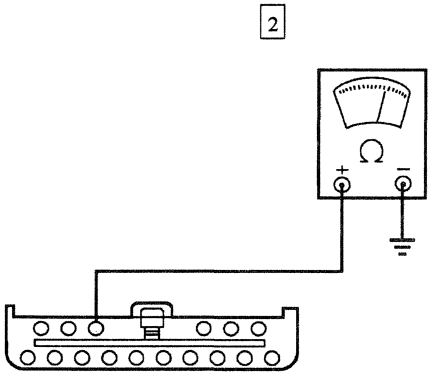 AF0238-A	2 Measure the resistance between air suspension control module C205-30, circuit 421 (PK), and ground. • Is the resistance greater than 10,000 ohms? → **Yes** GO to **N6**. → **No** REPAIR circuit 421 (PK). TEST the system for normal operation.

Official Licensed Product Ford Motor Company

(Continued)

DIAGNOSIS AND TESTING (Continued)

PINPOINT TEST N: DTC 70 — VENT SOLENOID VALVE (Continued)

TEST CONDITIONS	TEST DETAILS/RESULTS/ACTIONS
N6 CHECK THE RESISTANCE OF CIRCUIT 421 (PK) BETWEEN C205 AND C134	
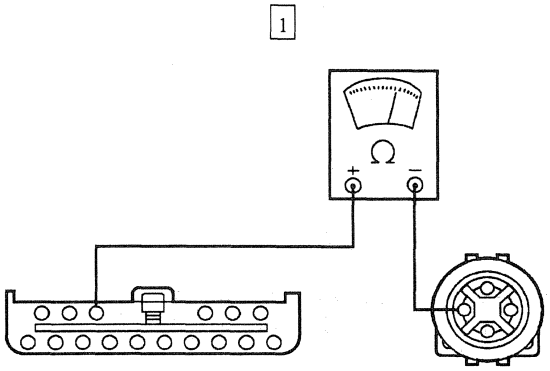 AF0239-A	1 Measure the resistance between air suspension control module C205-30, circuit 421 (PK), and air compressor vent solenoid and motor C134, circuit 421 (PK). • Is the resistance less than 5 ohms? → **Yes** GO to N7. → **No** REPAIR circuit 421 (PK). TEST the system for normal operation.
N7 CHECK THE AIR SUSPENSION CONTROL MODULE OUTPUT	
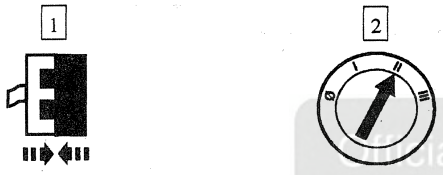 Air Suspension Control Module C205 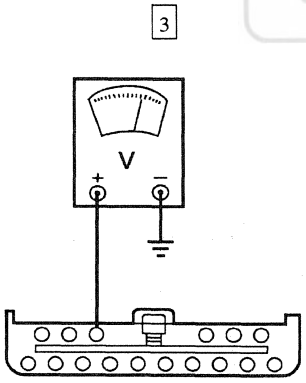 AF0237-A	3 Measure the voltage between air suspension control module C205-30, circuit 421 (PK), and ground.

Official Licensed Product
Ford Motor Company

(Continued)

DIAGNOSIS AND TESTING (Continued)

PINPOINT TEST N: DTC 70 — VENT SOLENOID VALVE (Continued)

TEST CONDITIONS	TEST DETAILS/RESULTS/ACTIONS
N7 CHECK THE AIR SUSPENSION CONTROL MODULE OUTPUT (Continued)	
4 	4 Perform Vent Function Test 213, 215, 217 or 219. • Does the voltage output to the vent solenoid pulse? → **Yes** REPLACE the air compressor; REFER to Air Compressor. TEST the system for normal operation. → **No** TEST the system for normal operation. If DTC 70 is retrieved, REPLACE the air suspension control module; REFER to Control Module — Air Suspension. TEST the system for normal operation.

PINPOINT TEST P: DTC 75 — COMPRESSOR RELAY CONTROL CIRCUIT

TEST CONDITIONS	TEST DETAILS/RESULTS/ACTIONS
P1 CHECK THE RELAY CONNECTOR	
1 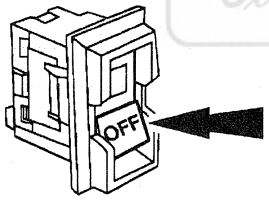 GF1439-A 2 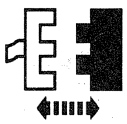 Compressor Relay C142	1 Turn the air suspension switch OFF. 3 Inspect the compressor relay terminals.

Official Licensed Product
Ford Motor Company

(Continued)

DIAGNOSIS AND TESTING (Continued)

PINPOINT TEST P: DTC 75 — COMPRESSOR RELAY CONTROL CIRCUIT (Continued)

TEST CONDITIONS	TEST DETAILS/RESULTS/ACTIONS
P1 CHECK THE RELAY CONNECTOR (Continued)	
	4 Inspect the compressor relay connector. • Are the terminals or the socket dirty, bent or corroded? → **Yes** REPAIR as required. TEST the system for normal operation. → **No** GO to **P2**.
P2 CHECK THE RELAY SUPPLY CIRCUIT 175 (BK/Y)	
1 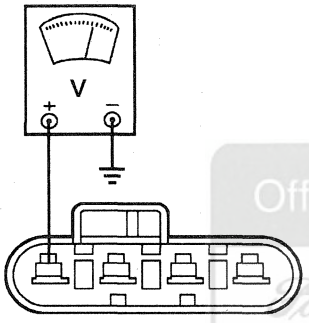 AF0216-A	1 Measure the voltage between compressor relay C142-A, circuit 175 (BK/Y), and ground. • Is the voltage greater than 10 volts? → **Yes** GO to **P3**. → **No** REPAIR circuit 175 (BK/Y). TEST the system for normal operation.
P3 CHECK THE CIRCUIT 420 (DB/Y) VOLTAGE	
1 2 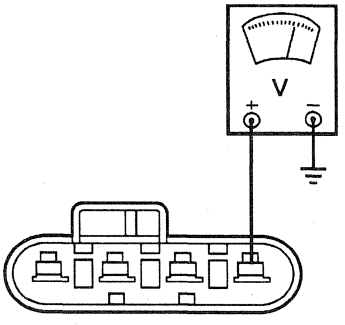 AF0217-A	2 Measure the voltage between compressor relay C142-D, circuit 420 (DB/Y), and ground. • Is the voltage greater than 10 volts? → **Yes** GO to **P8**. → **No** GO to **P4**.

(Continued)

Official Licensed Product Ford Motor Company

DIAGNOSIS AND TESTING (Continued)

PINPOINT TEST P: DTC 75 — COMPRESSOR RELAY CONTROL CIRCUIT (Continued)

TEST CONDITIONS	TEST DETAILS/RESULTS/ACTIONS
P4 CHECK FOR ZERO VOLT ON CIRCUIT 420 (DB/Y)	
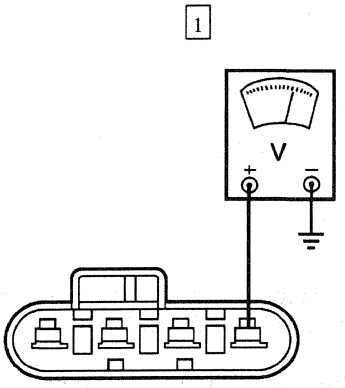 AF0217-A	1 Measure the voltage between compressor relay C142-D, circuit 420 (DB/Y), and ground. • Is 0 volt present? → **Yes** GO to **P6**. → **No** GO to **P5**.
P5 CHECK FOR 2-10 VOLTS ON CIRCUIT 420 (DB/Y)	
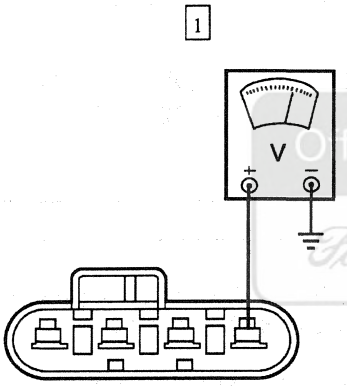 AF0217-A	1 Measure the voltage between compressor relay C142-D, circuit 420 (DB/Y), and ground. • Is the voltage between 2 and 10 volts? → **Yes** GO to **P7**. → **No** REPLACE the air suspension control module; REFER to Control Module — Air Suspension. TEST the system for normal operation.

Official Licensed Product
Ford Motor Company

(Continued)

DIAGNOSIS AND TESTING (Continued)

PINPOINT TEST P: DTC 75 — COMPRESSOR RELAY CONTROL CIRCUIT (Continued)

TEST CONDITIONS	TEST DETAILS/RESULTS/ACTIONS
P6 CHECK CIRCUIT 420 (DB/Y) FOR SHORT TO GROUND	
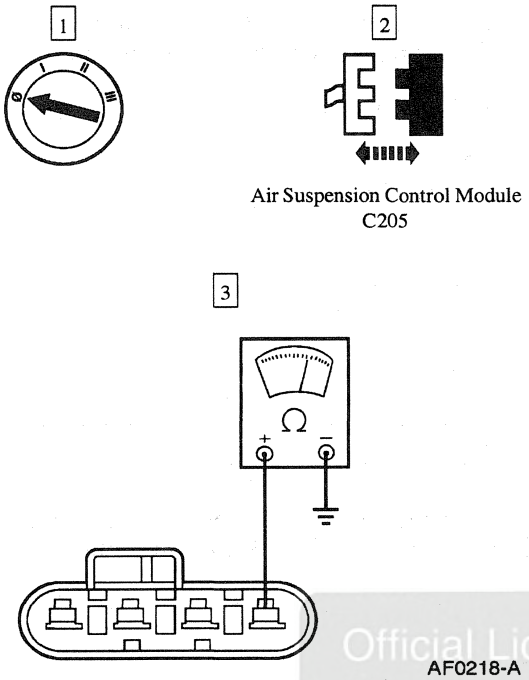	3 Measure the resistance between compressor relay C142-D, circuit 420 (DB/Y), and ground. • Is the resistance greater than 10,000 ohms? → **Yes** REPAIR circuit 420 (DB/Y) for open. TEST the system for normal operation. → **No** REPAIR circuit 420 (DB/Y) for short. TEST the system for normal operation.
P7 CHECK CIRCUIT 57 (BK) RESISTANCE TO GROUND	
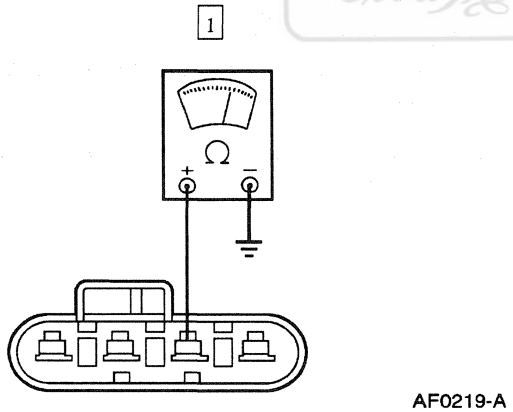	1 Measure the resistance between compressor relay C142-C, circuit 57 (BK), and ground. • Is the resistance less than 5 ohms? → **Yes** GO to **P9**. → **No** REPAIR circuit 57 (BK) for open or high resistance. TEST the system for normal operation.

Official Licensed Product
Ford Motor Company

(Continued)

DIAGNOSIS AND TESTING (Continued)

PINPOINT TEST P: DTC 75 — COMPRESSOR RELAY CONTROL CIRCUIT (Continued)

TEST CONDITIONS	TEST DETAILS/RESULTS/ACTIONS
P8 CHECK CIRCUIT 420 (DB/Y) FOR SHORT TO POWER	
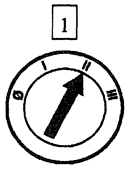 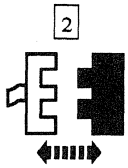 Air Suspension Control Module C205 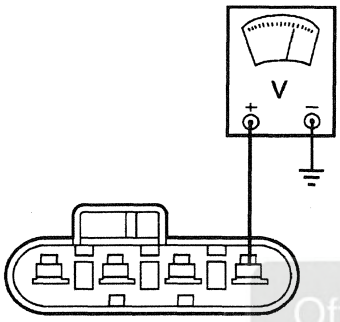 AF0217-A	3 Measure the voltage between compressor relay C142-D, circuit 420 (DB/Y), and ground. • Is 0 volt present? → **Yes** GO to **P9**. → **No** REPAIR circuit 420 (DB/Y). TEST the system for normal operation.
P9 CHECK THE COMPRESSOR OPERATION WITHOUT THE RELAY	
⚠ **CAUTION: Do not run the compressor more than one minute to prevent overheating.**	
 Air Compressor Vent Solenoid and Motor C134 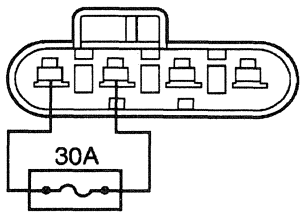 AF0220-A	2 Using a fused (30A) jumper, connect compressor relay C142-B, circuit 417 (P/O), to C142-A, circuit 175 (BK/Y). • Does the compressor run? → **Yes** REPLACE the relay. TEST the system for normal operation. → **No** GO to Pinpoint Test U to continue the compressor diagnosis.

Official Licensed Product Ford Motor Company

DIAGNOSIS AND TESTING (Continued)

PINPOINT TEST Q: DTC 80 — LH FRONT AIR SPRING SOLENOID VALVE CIRCUIT FAILURE

TEST CONDITIONS	TEST DETAILS/RESULTS/ACTIONS
Q1 CHECK THE LH FRONT AIR SPRING SOLENOID CONNECTOR C151 FOR DAMAGE	
1 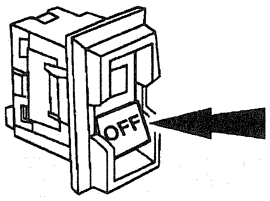 GF1439-A 2 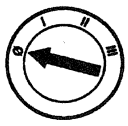 3 LH Front Air Spring Solenoid Valve C151	1 Turn the air suspension switch OFF. 4 Inspect the solenoid and C151. • Is C151 or the LH front solenoid worn, contaminated or damaged? → **Yes** REPAIR or REPLACE as required. TEST the system for normal operation. → **No** GO to **Q2**.
Q2 CHECK THE AIR SPRING SOLENOID FOR AN INTERNAL OPEN CIRCUIT	
1 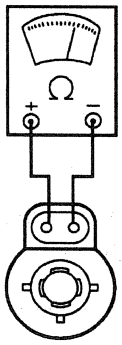 AF0221-A	1 Measure the resistance across the air spring solenoid valve terminals. • Is the resistance between 14 and 18 ohms? → **Yes** GO to **Q3**. → **No** REPLACE the LH front air spring solenoid valve. TEST the system for normal operation.

Official Licensed Product
Ford Motor Company

(Continued)

DIAGNOSIS AND TESTING (Continued)

PINPOINT TEST Q: DTC 80 — LH FRONT AIR SPRING SOLENOID VALVE CIRCUIT FAILURE (Continued)

TEST CONDITIONS	TEST DETAILS/RESULTS/ACTIONS
Q3 CHECK CIRCUIT 57 (BK) FOR OPEN	
1 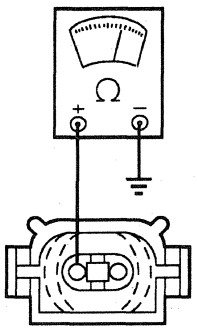 AF0222-A	1 Measure the resistance between LH front air spring solenoid valve C151, circuit 57 (BK), and ground. • Is the resistance less than 5 ohms? → **Yes** GO to **Q4**. → **No** REPAIR circuit 57 (BK). TEST the system for normal operation.
Q4 CHECK CIRCUIT 415 (LG/O) FOR SHORT TO POWER	
1 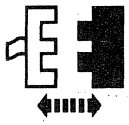 Air Suspension Control Module C205 2 3 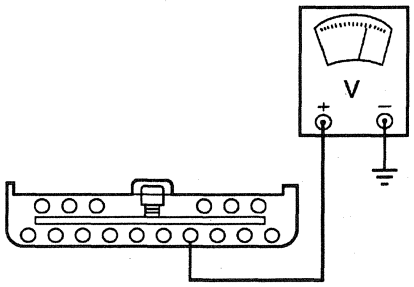 AF0223-A	3 Measure the voltage between air suspension control module C205-14, circuit 415 (LG/O), and ground. • Is the voltage greater than 10 volts? → **Yes** REPAIR circuit 415 (LG/O). TEST the system for normal operation. → **No** GO to **Q5**.

Official Licensed Product
Ford Motor Company

(Continued)

DIAGNOSIS AND TESTING (Continued)

PINPOINT TEST Q: DTC 80 — LH FRONT AIR SPRING SOLENOID VALVE CIRCUIT FAILURE (Continued)

TEST CONDITIONS	TEST DETAILS/RESULTS/ACTIONS
Q5 CHECK CIRCUIT 415 (LG/O) FOR SHORT TO GROUND	
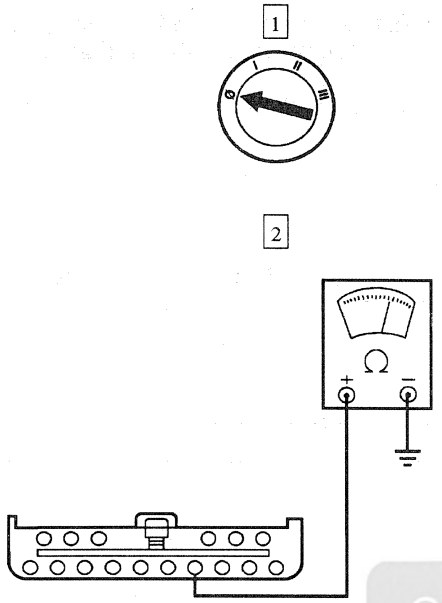	2 Measure the resistance between air suspension control module C205-14, circuit 415 (LG/O), and ground. • Is the resistance greater than 10,000 ohms? → **Yes** GO to **Q6**. → **No** REPAIR the circuit 415 (LG/O). TEST the system for normal operation.
Q6 CHECK CIRCUIT 415 (LG/O) FOR AN OPEN	
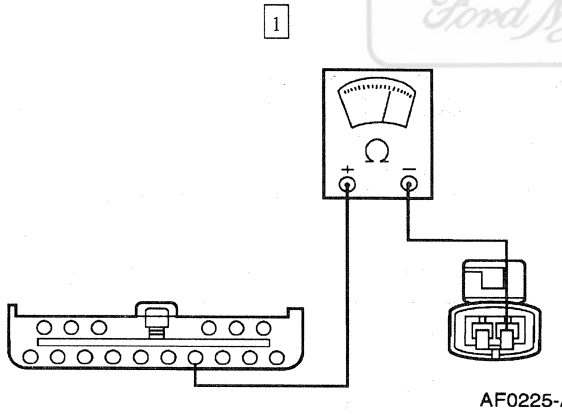	1 Measure the resistance between air suspension control module C205-14, circuit 415 (LG/O), and the LH spring solenoid C151, circuit 415 (LG/O). • Is the resistance less than 5 ohms? → **Yes** GO to **Q7**. → **No** REPAIR circuit 415 (LG/O). TEST the system for normal operation.

Official Licensed Product
Ford Motor Company

(Continued)

DIAGNOSIS AND TESTING (Continued)

PINPOINT TEST Q: DTC 80 — LH FRONT AIR SPRING SOLENOID VALVE CIRCUIT FAILURE (Continued)

TEST CONDITIONS	TEST DETAILS/RESULTS/ACTIONS
Q7 CHECK THE AIR SUSPENSION CONTROL MODULE OUTPUT	
1 Air Suspension Control Module C205	
2 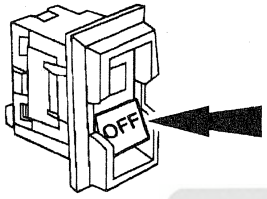 GF1439-A	2 Turn the air suspension switch OFF.
3 	4 Perform Function Test 212: Pump LH Front and Function Test 213: Vent LH Front.
4 	
5 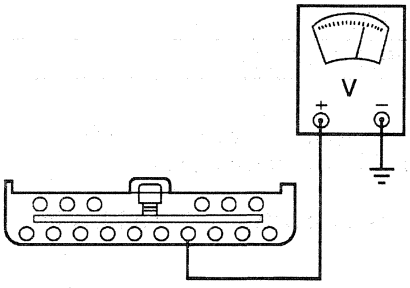 AF0223-A	5 Measure the voltage between air suspension control module C205-14, circuit 415 (LG/O), and ground. • Does the solenoid pulse? → **Yes** REPLACE the LH front solenoid valve; refer to Solenoid Valve. TEST the system for normal operation. → **No** REPLACE the air suspension control module; REFER to Control Module — Air Suspension. TEST the system for normal operation for normal operation.

Official Licensed Product
Ford Motor Company

DIAGNOSIS AND TESTING (Continued)

PINPOINT TEST R: DTC 85 — RH FRONT AIR SPRING SOLENOID VALVE CIRCUIT FAILURE

TEST CONDITIONS	TEST DETAILS/RESULTS/ACTIONS
R1 CHECK THE RH FRONT AIR SPRING SOLENOID C150 FOR DAMAGE	
1 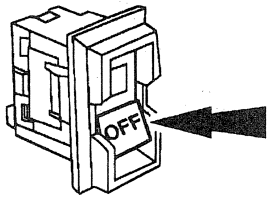 GF1439-A 2 3 RH Front Air Spring Solenoid Valve C150	1 Turn the air suspension switch OFF. 4 Inspect the solenoid and C150. • Is C150 or the RH front solenoid worn, contaminated or damaged? → **Yes** REPAIR or REPLACE as required. TEST the system for normal operation. → **No** GO to **R2**.
R2 CHECK THE AIR SPRING SOLENOID FOR AN INTERNAL OPEN CIRCUIT	
1 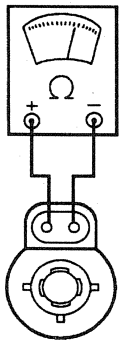 AF0221-A	1 Measure the resistance across the RH front air spring solenoid valve terminals. • Is the resistance between 14 and 18 ohms? → **Yes** GO to **R3**. → **No** REPLACE the RH front air spring solenoid valve. TEST the system for normal operation.

Official Licensed Product
Ford Motor Company®

(Continued)

DIAGNOSIS AND TESTING (Continued)

PINPOINT TEST R: DTC 85 — RH FRONT AIR SPRING SOLENOID VALVE CIRCUIT FAILURE (Continued)

TEST CONDITIONS	TEST DETAILS/RESULTS/ACTIONS
R3 CHECK CIRCUIT 57 (BK) FOR AN OPEN	
1 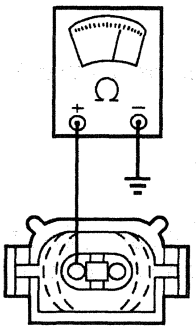 AF0222-A	1 Measure the resistance between RH front spring solenoid valve C150, circuit 57 (BK), and ground. • Is the resistance less than 5 ohms? → **Yes** GO to **R4**. → **No** REPAIR circuit 57 (BK). TEST the system for normal operation.
R4 CHECK CIRCUIT 414 (O/R) FOR SHORT TO POWER	
1 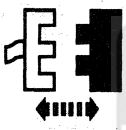 Air Suspension Control Module C205 2 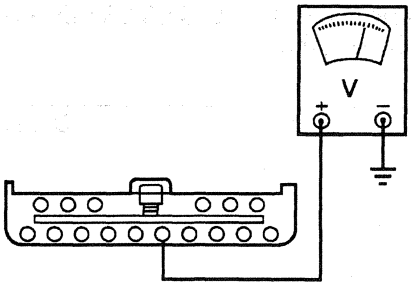 AF0226-A	2 Measure the voltage between air suspension control module C205-15, circuit 414 (O/R), and ground. • Is the voltage greater than 10 volts? → **Yes** REPAIR circuit 414 (O/R). TEST the system for normal operation. → **No** GO to **R5**.

Official Licensed Product
Ford Motor Company

(Continued)

DIAGNOSIS AND TESTING (Continued)

PINPOINT TEST R: DTC 85 — RH FRONT AIR SPRING SOLENOID VALVE CIRCUIT FAILURE (Continued)

TEST CONDITIONS	TEST DETAILS/RESULTS/ACTIONS
R5 CHECK CIRCUIT 414 (O/R) FOR SHORT TO GROUND	
1 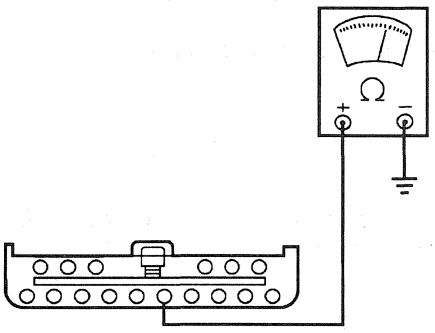 AF0227-A	1 Measure the resistance between air suspension control module C205-15, circuit 414 (O/R), and ground. • Is the resistance greater than 10,000 ohms? → **Yes** GO to **R6**. → **No** REPAIR the circuit 414 (O/R). TEST the system for normal operation.
R6 CHECK CIRCUIT 414 (O/R) FOR AN OPEN	
1 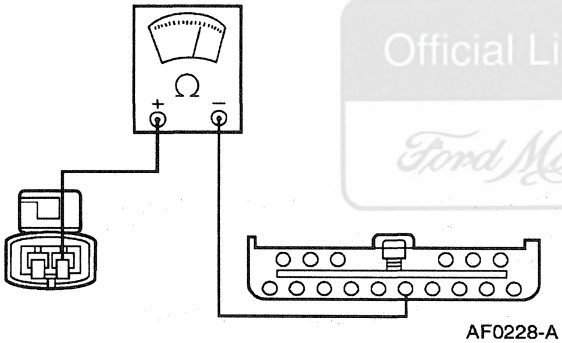 AF0228-A	1 Measure the resistance between air suspension control module C205-15, circuit 414 (O/R), and RH front air spring solenoid valve C150, circuit 414 (O/R). • Is the resistance less than 5 ohms? → **Yes** GO to **R7**. → **No** REPAIR circuit 414 (O/R). TEST the system for normal operation.

Official Licensed Product
Ford Motor Company

(Continued)

DIAGNOSIS AND TESTING (Continued)

PINPOINT TEST R: DTC 85 — RH FRONT AIR SPRING SOLENOID VALVE CIRCUIT FAILURE (Continued)

TEST CONDITIONS	TEST DETAILS/RESULTS/ACTIONS
R7 CHECK THE AIR SUSPENSION CONTROL MODULE OUTPUT	
1 Air Suspension Control Module C205	
2 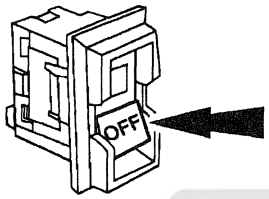 GF1439-A	2 Turn the air suspension switch OFF.
3 	
4 	4 Perform Function Test 214: Pump RH Front and Function Test 215: Vent RH Front.
5 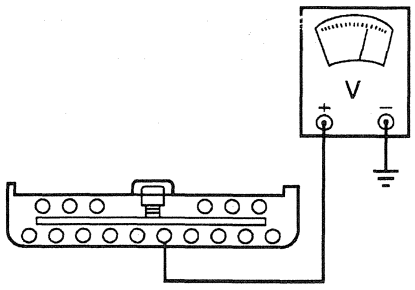 AF0226-A	5 Measure the voltage between air suspension control module C205-15, circuit 414 (O/R), and ground. • Does the solenoid pulse? → **Yes** REPLACE the RH front air spring solenoid valve. TEST the system for normal operation. → **No** REPLACE the air suspension control module; REFER to Control Module — Air Suspension. TEST the system for normal operation.

Official Licensed Product
Ford Motor Company

DIAGNOSIS AND TESTING (Continued)

PINPOINT TEST S: DTC 90 — LH REAR AIR SPRING SOLENOID VALVE CIRCUIT FAILURE

TEST CONDITIONS	TEST DETAILS/RESULTS/ACTIONS
S1 CHECK THE LH REAR AIR SPRING SOLENOID VALVE C419 FOR DAMAGE	
1 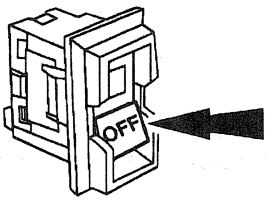 GF1439-A 2 3 LH Rear Spring Solenoid Valve C419	1 Turn the air suspension switch OFF. 4 Inspect the solenoid and C419. • Is C419 or the LH rear air spring solenoid worn, contaminated or damaged? → **Yes** REPAIR or REPLACE as required. TEST the system for normal operation. → **No** GO to **S2**.
S2 CHECK THE AIR SPRING SOLENOID FOR AN INTERNAL OPEN CIRCUIT	
1 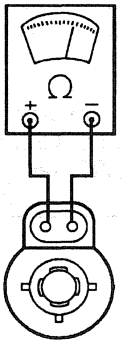 AF0221-A	1 Measure the resistance across the solenoid valve terminals. • Is the resistance between 14 and 18 ohms? → **Yes** GO to **S3**. → **No** REPLACE the LH rear air spring solenoid valve. TEST the system for normal operation.

(Continued)

Official Licensed Product
Ford Motor Company

DIAGNOSIS AND TESTING (Continued)

PINPOINT TEST S: DTC 90 — LH REAR AIR SPRING SOLENOID VALVE CIRCUIT FAILURE (Continued)

TEST CONDITIONS	TEST DETAILS/RESULTS/ACTIONS
S3 CHECK CIRCUIT 57 (BK) FOR AN OPEN	
1 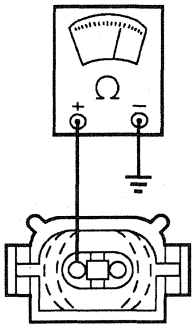 AF0222-A	1 Measure the resistance between LH rear air spring solenoid valve C419, circuit 57 (BK), and ground. • Is the resistance less than 5 ohms? → **Yes** GO to **S4**. → **No** REPAIR circuit 57 (BK). TEST the system for normal operation.
S4 CHECK CIRCUIT 429 (P/LG) FOR SHORT TO POWER	
1 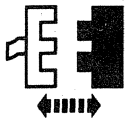 Air Suspension Control Module C205 2 3 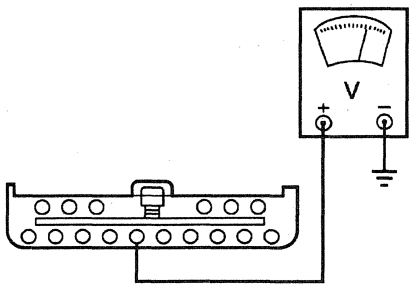 AF0229-A	3 Measure the voltage between air suspension control module C205-16, circuit 429 (P/LG), and ground. • Is any voltage indicated? → **Yes** REPAIR circuit 429 (P/LG). TEST the system for normal operation. → **No** GO to **S5**.

Ford Motor Company

(Continued)

DIAGNOSIS AND TESTING (Continued)

PINPOINT TEST S: DTC 90 — LH REAR AIR SPRING SOLENOID VALVE CIRCUIT FAILURE (Continued)

TEST CONDITIONS	TEST DETAILS/RESULTS/ACTIONS
S5 CHECK CIRCUIT 429 (P/LG) FOR SHORT TO GROUND	
1 2 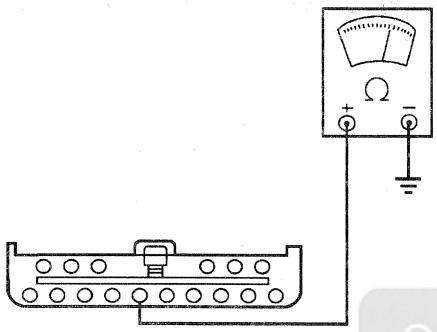 AF0230-A	2 Measure the resistance between air suspension control module C205-16, circuit 429 (P/LG), and ground. • Is the resistance less than 5 ohms? → **Yes** GO to **S6**. → **No** REPAIR circuit 429 (P/LG). TEST the system for normal operation.
S6 CHECK CIRCUIT 429 (P/LG) FOR AN OPEN	
1 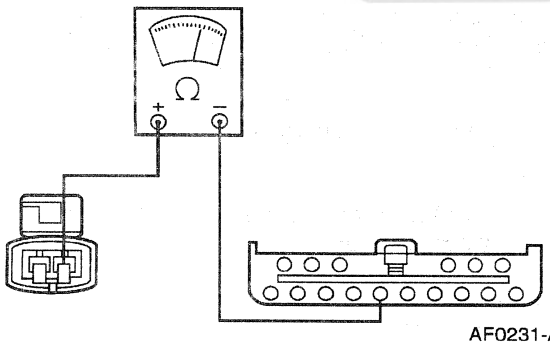 AF0231-A	1 Measure the resistance between air suspension control module C205-16, circuit 429 (P/LG), and the LH rear air spring solenoid valve C419, circuit 429 (P/LG). • Is the resistance less than 5 ohms? → **Yes** GO to **S7**. → **No** REPAIR circuit 429 (P/LG). TEST the system for normal operation.

Official Licensed Product
Ford Motor Company

(Continued)

DIAGNOSIS AND TESTING (Continued)

PINPOINT TEST S: DTC 90 — LH REAR AIR SPRING SOLENOID VALVE CIRCUIT FAILURE (Continued)

TEST CONDITIONS	TEST DETAILS/RESULTS/ACTIONS
S7 CHECK THE AIR SUSPENSION CONTROL MODULE OUTPUT	
1 Air Suspension Control Module C205	
2 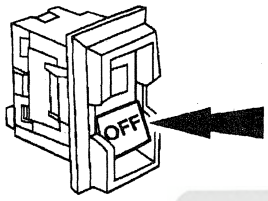 GF1439-A	2 Turn the air suspension switch OFF.
3 	
4 	4 Perform Function Test 216: Pump LH Rear and Function Test 217: Vent LH Rear.
5 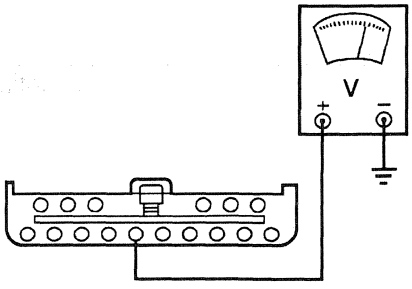 AF0229-A	5 Measure the voltage between air suspension control module C205-16, circuit 429 (P/LG), and ground. • Does the solenoid pulse? → **Yes** REPLACE the LH rear air spring solenoid valve. TEST the system for normal operation. → **No** REPLACE the air suspension control module; REFER to Control Module — Air Suspension. TEST the system for normal operation.

Official Licensed Product
Ford Motor Company

DIAGNOSIS AND TESTING (Continued)

PINPOINT TEST T: DTC 95 — RH REAR AIR SPRING SOLENOID VALVE CIRCUIT FAILURE

TEST CONDITIONS	TEST DETAILS/RESULTS/ACTIONS
T1 CHECK THE RH REAR AIR SPRING SOLENOID C420 FOR DAMAGE	
[1] 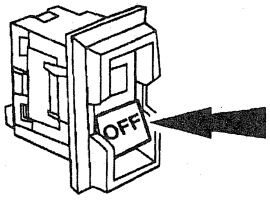 GF1439-A [2] 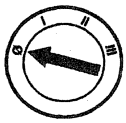 [3] RH Rear Air Spring Solenoid Valve C420	[1] Turn the air suspension switch OFF. [4] Inspect the solenoid and C420. • Is C420 or the RH rear air spring solenoid valve worn, contaminated or damaged? → **Yes** REPAIR or REPLACE the connector as required. TEST the system for normal operation. → **No** GO to **T2**.

Official Licensed Product
Ford Motor Company

(Continued)

DIAGNOSIS AND TESTING (Continued)

PINPOINT TEST T: DTC 95 — RH REAR AIR SPRING SOLENOID VALVE CIRCUIT FAILURE (Continued)

TEST CONDITIONS	TEST DETAILS/RESULTS/ACTIONS
T2 CHECK THE AIR SPRING SOLENOID FOR AN INTERNAL OPEN CIRCUIT	
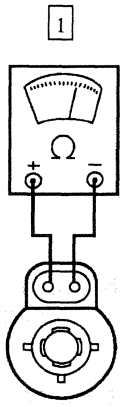 AF0221-A	1 Measure the resistance across the air spring solenoid valve terminals. • Is the resistance between 14 and 18 ohms? → **Yes** GO to **T3**. → **No** REPLACE the RH air spring solenoid valve. TEST the system for normal operation.
T3 CHECK CIRCUIT 57 (BK) FOR AN OPEN	
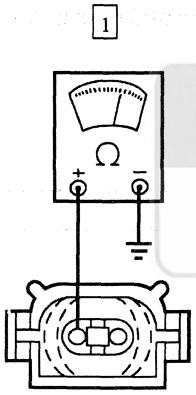 AF0222-A	1 Measure the resistance between air spring solenoid valve C420, circuit 57 (BK), and ground. • Is the resistance less than 5 ohms? → **Yes** GO to **T4**. → **No** REPAIR circuit 57 (BK). TEST the system for normal operation.

Official Licensed Product Ford Motor Company

(Continued)

DIAGNOSIS AND TESTING (Continued)

PINPOINT TEST T: DTC 95 — RH REAR AIR SPRING SOLENOID VALVE CIRCUIT FAILURE (Continued)

TEST CONDITIONS	TEST DETAILS/RESULTS/ACTIONS
T4 CHECK CIRCUIT 416 (LB/BK) FOR SHORT TO POWER	
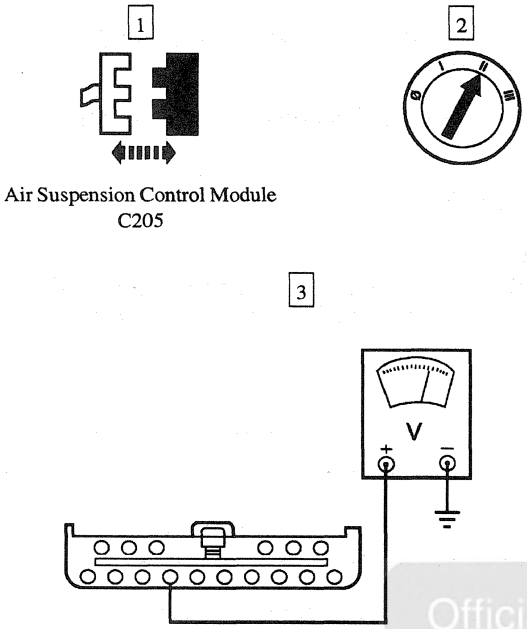	3 Measure the voltage between air suspension control module C205-17, circuit 416 (LB/BK), and ground. • Is any voltage indicated? → **Yes** REPAIR circuit 416 (LB/BK). TEST the system for normal operation. → **No** GO to **T5**.
T5 CHECK CIRCUIT 416 (LB/BK) FOR SHORT TO GROUND	
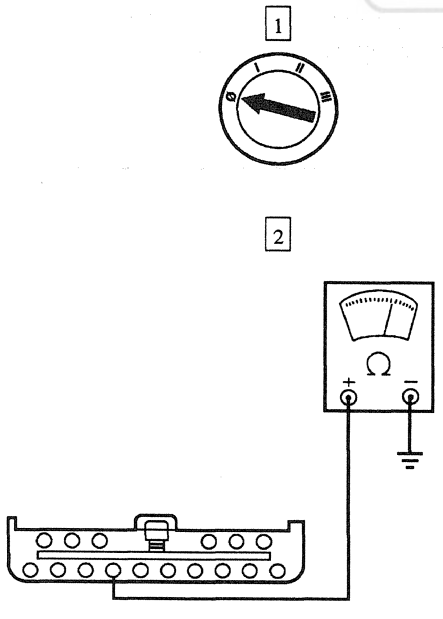	2 Measure the resistance between air suspension control module C205-17, circuit 416 (LB/BK), and ground. • Is the resistance greater than 10,000 ohms? → **Yes** GO to **T6**. → **No** REPAIR circuit 416 (LB/BK). TEST the system for normal operation.

Official Licensed Product

(Continued)

DIAGNOSIS AND TESTING (Continued)

PINPOINT TEST T: DTC 95 — RH REAR AIR SPRING SOLENOID VALVE CIRCUIT FAILURE (Continued)

TEST CONDITIONS	TEST DETAILS/RESULTS/ACTIONS
T6 CHECK CIRCUIT 416 (LB/BK) FOR AN OPEN	
1 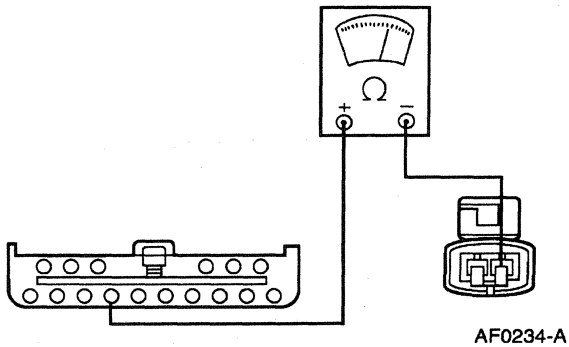 AF0234-A	1 Measure the resistance between air suspension control module C205-17, circuit 416 (LB/BK), and the RH rear air spring solenoid valve C420, circuit 416 (LB/BK). • Is the resistance less than 5 ohms? → **Yes** GO to **T7**. → **No** REPAIR circuit 416 (LB/BK). TEST the system for normal operation.
T7 CHECK THE AIR SUSPENSION CONTROL MODULE OUTPUT	
1 Air Suspension Control Module C205	
2 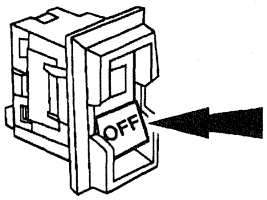 GF1439-A	2 Turn the air suspension switch OFF.
3 	4 Perform Function Test 218: Pump RH Rear and Function Test 219: Vent RH Rear.
4 	

Official Licensed Product
Ford Motor Company

(Continued)

DIAGNOSIS AND TESTING (Continued)

PINPOINT TEST T: DTC 95 — RH REAR AIR SPRING SOLENOID VALVE CIRCUIT FAILURE (Continued)

TEST CONDITIONS	TEST DETAILS/RESULTS/ACTIONS
T7 CHECK THE AIR SUSPENSION CONTROL MODULE OUTPUT (Continued)	
5 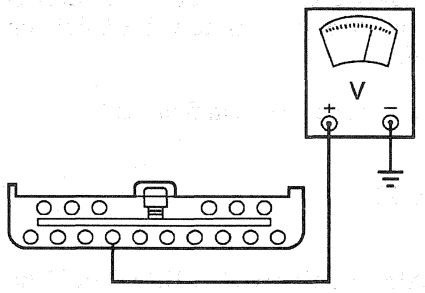 AF0232-A	5 Measure the voltage between air suspension control module C205-17, circuit 416 (LB/BK), and ground. • Does the solenoid pulse? → **Yes** REPLACE the RH rear solenoid valve; refer to Solenoid Valve. TEST the system for normal operation. → **No** REPLACE the air suspension control module; REFER to Control Module — Air Suspension. TEST the system for normal operation.

PINPOINT TEST U: DTC 98 — COMPRESSOR RUN TIME EXCEEDED

TEST CONDITIONS	TEST DETAILS/RESULTS/ACTIONS
U1 PERFORM THE AUTO TEST	
1 2 3 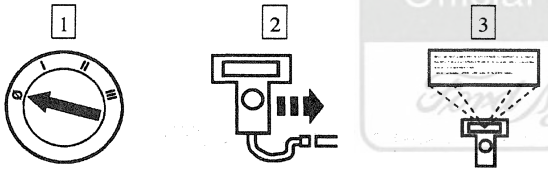 4 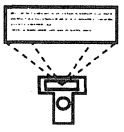	3 Perform Function Test for Air Spring: 212-LH Front, 214-RH Front, 216-LH Rear, 218-RH Rear, and 221-Compressor Run. 4 Perform the Auto Test. • Is DTC 98 retrieved? → **Yes** GO to **U2**. → **No** REPEAT the Auto Test.

Official Licensed Product Ford Motor Company

(Continued)

DIAGNOSIS AND TESTING (Continued)

PINPOINT TEST U: DTC 98 — COMPRESSOR RUN TIME EXCEEDED (Continued)

TEST CONDITIONS	TEST DETAILS/RESULTS/ACTIONS
U2 TEST CIRCUIT 417 (P/O) FOR SHORT TO POWER	
1 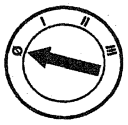 	
2 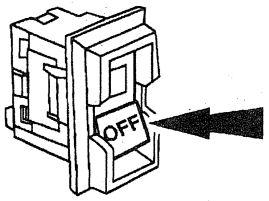 GF1439-A	2 Turn the air suspension switch OFF.
3 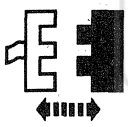 Air Compressor Relay C142	
4 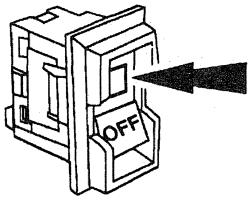 GF1440-A	4 Turn the air suspension switch ON. • Does the air compressor run? → **Yes** REPAIR circuit 417 (P/O). TEST the system for normal operation. → **No** GO to **U3**.

Official Licensed Product
Ford Motor Company

(Continued)

DIAGNOSIS AND TESTING (Continued)

PINPOINT TEST U: DTC 98 — COMPRESSOR RUN TIME EXCEEDED (Continued)

TEST CONDITIONS	TEST DETAILS/RESULTS/ACTIONS
U3 CHECK THE AIR COMPRESSOR CONNECTIONS	
	1 Visually inspect the air compressor connections for corrosion and damage. • Are the connectors OK? → **Yes** GO to **U4**. → **No** REPAIR the connectors as required. TEST the system for normal operation.
U4 TEST THE AIR COMPRESSOR GROUND	
1 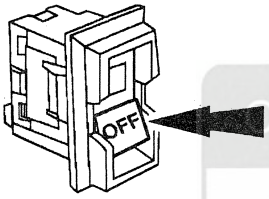 GF1439-A	1 Turn the air suspension switch OFF.
2 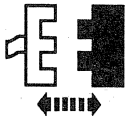 Air Compressor Vent Solenoid and Motor C134	
3 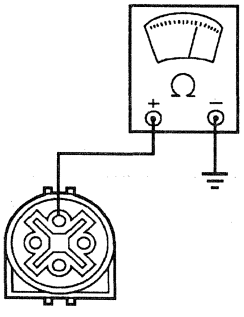 AF0260-A	3 Measure the resistance between air compressor vent solenoid and motor C134-1, circuit 57 (BK), and ground.

Official Licensed Product
Ford Motor Company

(Continued)

DIAGNOSIS AND TESTING (Continued)

PINPOINT TEST U: DTC 98 — COMPRESSOR RUN TIME EXCEEDED (Continued)

TEST CONDITIONS	TEST DETAILS/RESULTS/ACTIONS
U4 TEST THE AIR COMPRESSOR GROUND (Continued)	
4 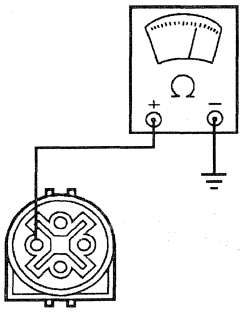 AF0261-A	4 Measure the resistance between air compressor vent solenoid and motor C134-4, circuit 57 (BK), and ground. • Are the resistances less than 5 ohms? → **Yes** GO to **U5**. → **No** REPAIR circuit 57 (BK). TEST the system for normal operation.
U5 TEST CIRCUIT 417 (P/O) FOR SHORT TO GROUND	
1 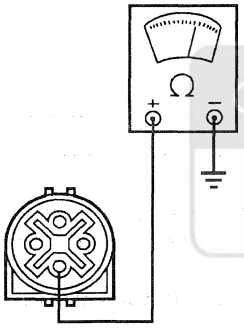 AF0262-A	1 Measure the resistance between air compressor vent solenoid and motor C134-3, circuit 417 (P/O), and ground. • Is the resistance greater than 10,000 ohms? → **Yes** GO to **U6**. → **No** REPAIR circuit 417 (P/O). TEST the system for normal operation.

Official Licensed Product
Ford Motor Company

(Continued)

DIAGNOSIS AND TESTING (Continued)

PINPOINT TEST U: DTC 98 — COMPRESSOR RUN TIME EXCEEDED (Continued)

TEST CONDITIONS	TEST DETAILS/RESULTS/ACTIONS
U6 TEST THE AIR SUSPENSION COMPRESSOR RELAY	
1 Air Compressor Vent Solenoid Motor C134 2 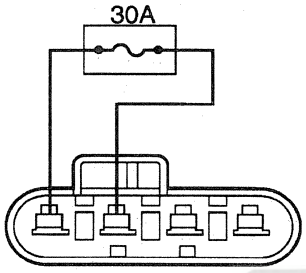 AF0263-A	2 Using a fused jumper wire, jump air compressor relay C142-A, circuit 175 (BK/Y), and C142-B, circuit 417 (P/O). • Does the air compressor run? → **Yes** Air compressor is OK. RETURN to original test. → **No** GO to **U7**.
U7 TEST CIRCUIT 175 (BK/Y) FOR AN OPEN	
1 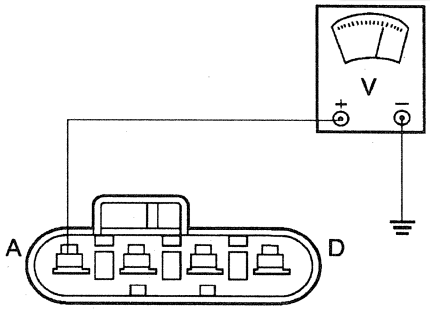 AF0264-A	1 Measure the voltage between air compressor relay C142-A, circuit 175 (BK/Y), and ground. • Is the voltage greater than 10 volts? → **Yes** GO to **U8**. → **No** REPAIR circuit 175 (BK/Y). TEST the system for normal operation.

Official Licensed Product
Ford Motor Company

(Continued)

DIAGNOSIS AND TESTING (Continued)

PINPOINT TEST U: DTC 98 — COMPRESSOR RUN TIME EXCEEDED (Continued)

TEST CONDITIONS	TEST DETAILS/RESULTS/ACTIONS
U8 TEST CIRCUIT 417 (P/O) FOR AN OPEN	
1 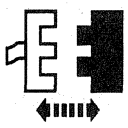 Air Compressor Vent Solenoid and Motor C134 2 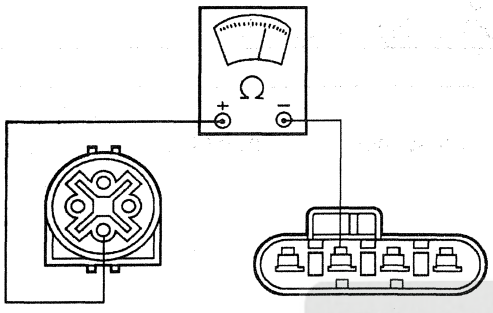 AF0265-A	2 Measure the resistance between air compressor relay C142-B, circuit 417 (P/O), and air compressor C134-3, circuit 417 (P/O). • Is the resistance less than 5 ohms? → **Yes** REPLACE the air compressor; REFER to Air Compressor. TEST the system for normal operation. → **No** REPAIR circuit 417 (P/O). TEST the system for normal operation.

Official Licensed Product

PINPOINT TEST V: DTC 99 — UNABLE TO DETECT RAISING OR LOWERING OF ONE OR MORE CORNERS

Ford Motor Company

TEST CONDITIONS	TEST DETAILS/RESULTS/ACTIONS
V1 CHECK FOR LOW CORNER(S)	
	1 Check for one or more corners obviously sitting lower than the trim height. • Are one or more corners sitting lower than the trim height? → **Yes** GO to **V3**. CHECK the operation at the lowest corner first. → **No** GO to **V2**.

(Continued)

DIAGNOSIS AND TESTING (Continued)

PINPOINT TEST V: DTC 99 — UNABLE TO DETECT RAISING OR LOWERING OF ONE OR MORE CORNERS (Continued)

TEST CONDITIONS	TEST DETAILS/RESULTS/ACTIONS
V2 CHECK FOR HIGH CORNER(S)	
	1 Check for one or more corners obviously sitting higher than the trim height. • Are one or more corners sitting higher than the trim height? → **Yes** GO to **V4**. → **No** GO to Pinpoint Test U.
V3 PUMP THE LOW CORNER(S)	
1 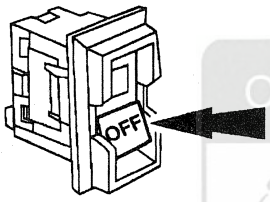 GF1439-A	1 Turn the air suspension switch OFF.
2 	2 Perform Function Test for air spring: 212 - LH Front, 214 - RH Front, 216 - LH Rear, and 218 - RH Rear. • Does the compressor run? → **Yes** GO to **V5**. → **No** GO to Pinpoint Test P.

(Continued)

Official Licensed Product
Ford Motor Company

DIAGNOSIS AND TESTING (Continued)

PINPOINT TEST V: DTC 99 — UNABLE TO DETECT RAISING OR LOWERING OF ONE OR MORE CORNERS (Continued)

TEST CONDITIONS	TEST DETAILS/RESULTS/ACTIONS
V4 VENT THE HIGH CORNER(S)	
1 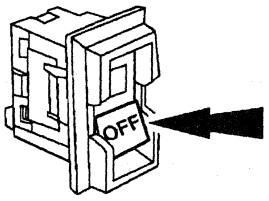 GF1439-A	1 Turn the air suspension switch OFF.
2 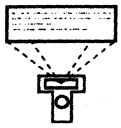	2 Perform Function Test for air spring: 213 - LH Front, 215 - RH Front, 217 - LH Rear, and 219 - RH Rear. • Does the corner go down? → **Yes** GO to Pinpoint Test K for the LH Front, Pinpoint Test L for the RH Front or Pinpoint Test M for the LH Rear. → **No** GO to **V13.**
V5 CHECK THE BALL STUD BRACKETS	
	1 Access and inspect the air suspension height sensors and the ball studs. • Are the height sensors off the ball studs or are the ball studs damaged? → **Yes** REPAIR the ball studs as required. REINSTALL the height sensors on the ball studs. REPLACE the height sensors as required. ADJUST the ride height; REFER to Ride Height Adjustment. → **No** GO to **V6.**
V6 CHECK THE HEIGHT SENSOR OPERATION	
	1 Disconnect one end of the air suspension height sensor from the ball stud.

Official Licensed Product
Ford Motor Company

(Continued)

DIAGNOSIS AND TESTING (Continued)

PINPOINT TEST V: DTC 99 — UNABLE TO DETECT RAISING OR LOWERING OF ONE OR MORE CORNERS (Continued)

TEST CONDITIONS	TEST DETAILS/RESULTS/ACTIONS
V6 CHECK THE HEIGHT SENSOR OPERATION (Continued)	
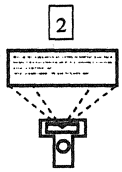	2 Perform Function Test for height sensor: 223 - LH Front, 224 - RH Front, and 225 - LH Rear. 3 Slowly compress and extend the height sensor over its full range. • Does the frequency of the tone pulses remain constant? → **Yes** GO to the Pinpoint Test K for the LH Front; GO to Pinpoint Test L for the RH Front; GO to Pinpoint Test M for the LH Rear. → **No** INSTALL air suspension height sensor to ball stud. GO to **V7**.
V7 CHECK FOR A BLOCKED AIR LINE	
	1 Disconnect the air line to the inoperative spring at both the air spring solenoid and the air pump canister. 2 Attach a hand-operated vacuum pump to the canister end of air line. 3 Operate the vacuum pump to pull vacuum on the air line. • Can vacuum be applied? → **Yes** REPLACE the blocked air line. → **No** GO to **V8**.
V8 CHECK FOR AN OPEN AIR LINE	
	1 Reattach the air line to the air spring solenoid connector.

(Continued)

Official Licensed Product Ford Motor Company

DIAGNOSIS AND TESTING (Continued)

PINPOINT TEST V: DTC 99 — UNABLE TO DETECT RAISING OR LOWERING OF ONE OR MORE CORNERS (Continued)

TEST CONDITIONS	TEST DETAILS/RESULTS/ACTIONS
V8 CHECK FOR AN OPEN AIR LINE (Continued)	
	2 Operate the vacuum pump to apply vacuum. • Can vacuum be applied and held? → **Yes** GO to **V9**. → **No** REPLACE the open air line. TEST the system for normal operation.
V9 CHECK THE AIR SPRINGS AND SOLENOID VALVES FOR LEAKS	
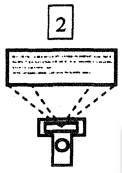	1 Attach shop air hose to the canister end of the air line to suspect air spring. 2 Perform Function Test for air spring: 213 - LH Front, 215 - RH Front, 217 - LH Rear, and 219 - RH Rear. 3 Inflate the air spring to full-up travel. • Does the air flow into the air spring with no leakage detected? → **Yes** GO to **V10**. → **No** REPLACE the suspect air spring solenoid valve or leaking air spring. TEST the system for normal operation.
V10 CHECK THE AIR COMPRESSOR OUTPUT	
	1 Disconnect the air line at the RH front air spring solenoid. 2 Connect the air line to a pressure gauge with a minimum 1379 kPa (200 psi) range.

(Continued)

Official Licensed Product
Ford Motor Company

DIAGNOSIS AND TESTING (Continued)

PINPOINT TEST V: DTC 99 — UNABLE TO DETECT RAISING OR LOWERING OF ONE OR MORE CORNERS (Continued)

TEST CONDITIONS	TEST DETAILS/RESULTS/ACTIONS
V10 CHECK THE AIR COMPRESSOR OUTPUT (Continued)	
3 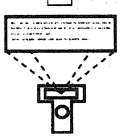	3 Perform Function Test 221 — Compressor Run for 30 seconds. • Does the pressure reach 896 kPa (130 psi)? → **Yes** GO to **V11**. → **No** GO to **V12**.
V11 CHECK FOR THE ABILITY TO HOLD PRESSURE	
	1 Check the pressure gauge after 30 seconds. • Is the pressure held at a minimum of 896 kPa (130 psi)? → **Yes** The air compressor and drier are OK. → **No** REPLACE the air compressor drier; REFER to Drier.
V12 CHECK THE AIR FLOW THROUGH THE AIR COMPRESSOR DRIER	
NOTE: Do not lose or damage the O-ring seal on the drier.	
	1 Remove the air compressor drier from the air compressor. 2 Disconnect one air line from the drier. 3 Blow shop air through the disconnected air line port into the drier. • Does air flow freely through the air compressor drier? → **Yes** REPLACE the air compressor; REFER to Air Compressor. TEST the system for normal operation. → **No** REPLACE the air compressor drier; REFER to Drier. TEST the system for normal operation.

Official Licensed Product

(Continued)

DIAGNOSIS AND TESTING (Continued)

PINPOINT TEST V: DTC 99 — UNABLE TO DETECT RAISING OR LOWERING OF ONE OR MORE CORNERS (Continued)

TEST CONDITIONS	TEST DETAILS/RESULTS/ACTIONS
V13 CHECK THE FLOW FROM THE AIR SPRING TO THE AIR COMPRESSOR DRIER	
1 Corner May Drop Quickly 3 	2 Disconnect the air line to the suspect air spring at the air compressor drier. 3 Perform Function Test for air spring: 213 - LH Front, 215 - RH Front, 217 - LH Rear, and 219 - RH Rear. • Does the corner lower? → **Yes** GO to **V12**. → **No** GO to **V14**.
V14 CHECK FOR A BLOCKED AIR LINE	
	1 Disconnect the air line to the inoperative air spring at both the air spring solenoid and air compressor drier. 2 Attach a hand-operated vacuum pump to the drier end of the air line. 3 Operate the vacuum pump to pull vacuum on the air line. • Can vacuum be applied? → **Yes** REPLACE the blocked air line. → **No** GO to **V15**.
V15 CHECK FOR A STUCK SOLENOID VALVE	
	1 Reinstall the air line to the suspect air spring solenoid. 2 Attach the drier end of the air line to shop air line.

(Continued)

Official Licensed Product
Ford Motor Company

DIAGNOSIS AND TESTING (Continued)

PINPOINT TEST V: DTC 99 — UNABLE TO DETECT RAISING OR LOWERING OF ONE OR MORE CORNERS (Continued)

TEST CONDITIONS	TEST DETAILS/RESULTS/ACTIONS
V15 CHECK FOR A STUCK SOLENOID VALVE (Continued)	
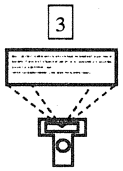	3 Perform Function Test for appropriate air spring; 213 - LH Front, 215 - RH Front, 217 - LH Rear, and 219 - RH Rear. • Does air flow into the suspect air spring? → **Yes** REPAIR or REPLACE the contaminated/partially blocked air spring solenoid valve as necessary. TEST the system for normal operation. → **No** REPLACE the suspect air spring solenoid valve. TEST the system for normal operation.

REMOVAL AND INSTALLATION

Switch — Air Suspension

Removal

Official Licensed Product
Ford Motor Company

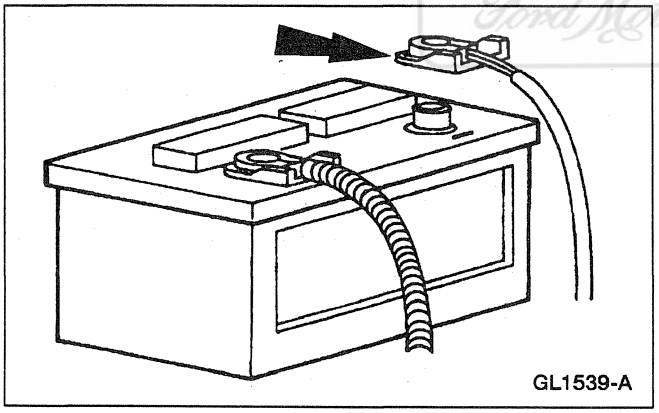

1. Disconnect the battery ground cable.

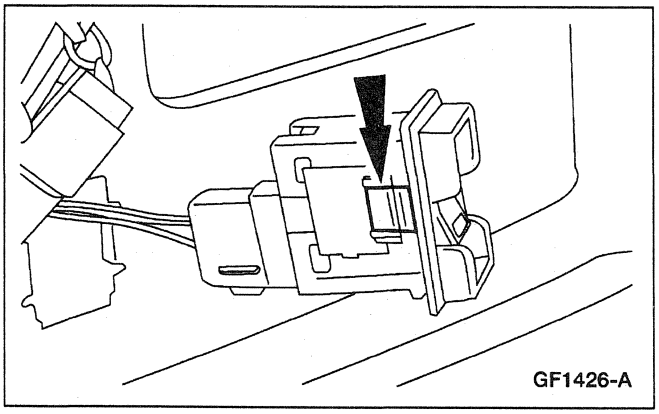

2. Squeeze the tabs on both sides to release the switch from the mounting panel.

REMOVAL AND INSTALLATION (Continued)

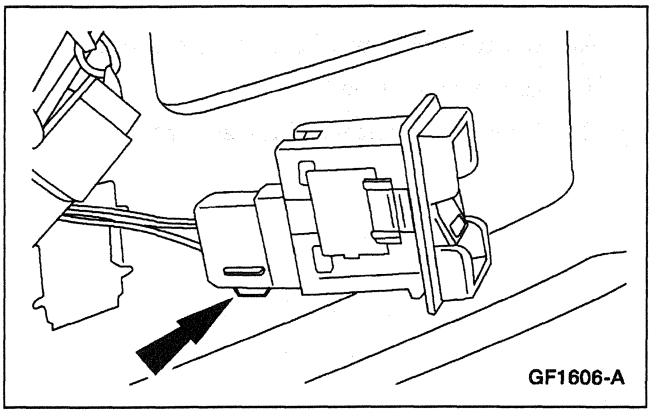

3. Disconnect the electrical connector and remove the air suspension switch.

Installation

1. **NOTE:** When the battery is disconnected and reconnected, some abnormal drive symptoms may occur while the vehicle relearns its adaptive strategy. The vehicle may need to be driven 16 km (10 mi) or more to relearn the strategy.

   To install, reverse the removal procedure.

Official Licensed Product
Ford Motor Company

Air Compressor

Removal

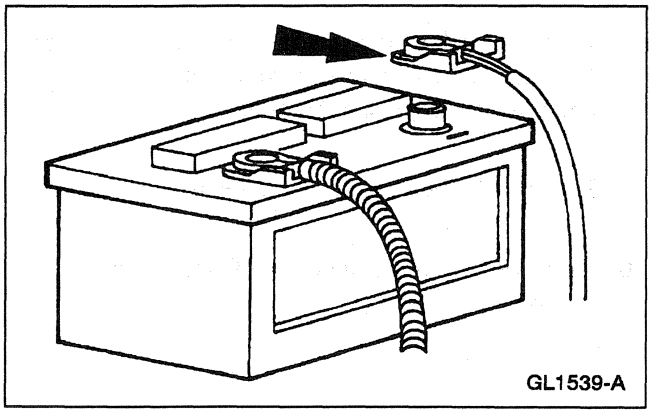

1. Vent the air springs; refer to the Function Test.
2. Disconnect the battery ground cable.
3. Raise and support the vehicle; refer to Section 100-02.

REMOVAL AND INSTALLATION (Continued)

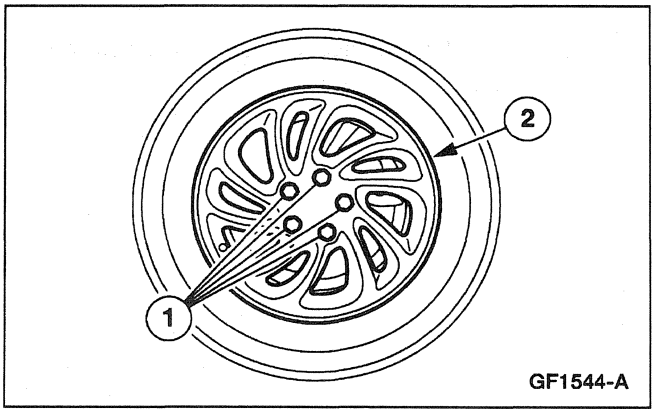

4. Remove the RH front wheel and tire assembly.
   1 Remove the lug nuts.
   2 Remove the wheel and tire assembly.

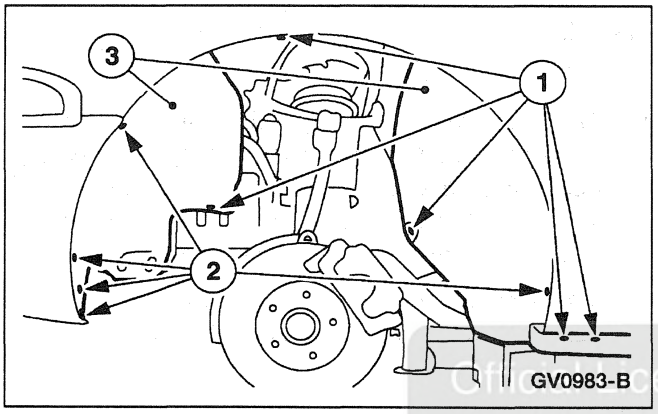

5. Remove the RH front fender splash shield.
   1 Remove the pushpins.
   2 Remove the screws.
   3 Remove the splash shield.

Ford Motor Company

6. Disconnect the electrical connector from the air compressor.

7. Disconnect the electrical connector from the relay.

8. Disconnect the wiring harness and the connector from the variable load control module (VLCM) and the air compressor bracket.

9. Disconnect the air lines from the air compressor.

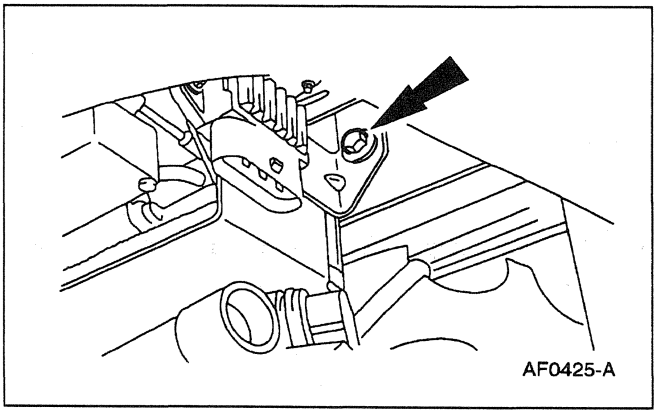

10. Remove the front bracket bolt from the air compressor.

REMOVAL AND INSTALLATION (Continued)

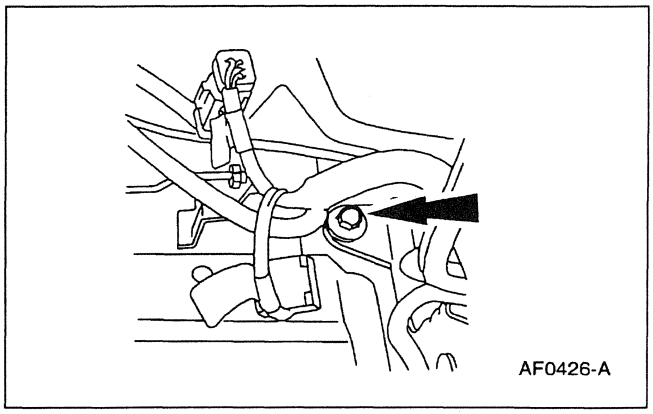

11. Remove the rear bracket bolt from the air compressor.

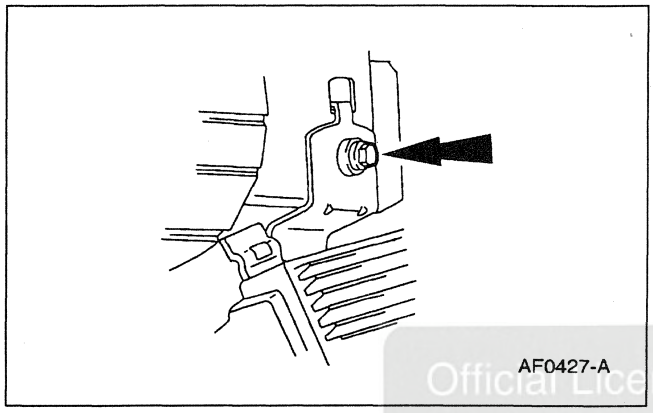

12. Remove the upper bracket bolt from the air compressor.

Official Licensed Product
Ford Motor Company

13. Remove the air compressor from the vehicle.

Installation

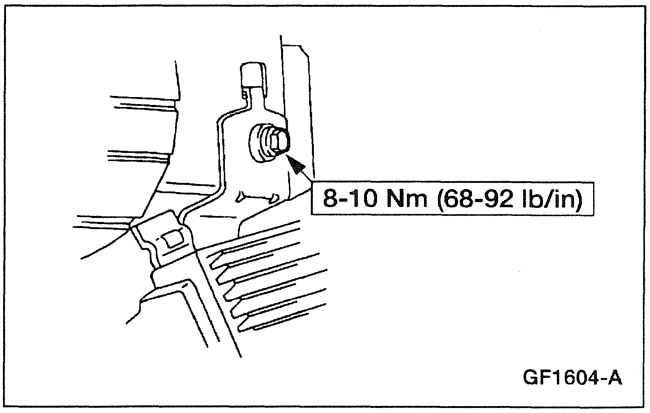

1. **NOTE:** When the battery is disconnected and reconnected, some abnormal drive symptoms may occur while the vehicle relearns its adaptive strategy. The vehicle may need to be driven 16 km (10 mi) or more to relearn the strategy.

   To install, reverse the removal procedure.

   - Refill the air springs; refer to Air Spring Fill.

REMOVAL AND INSTALLATION (Continued)

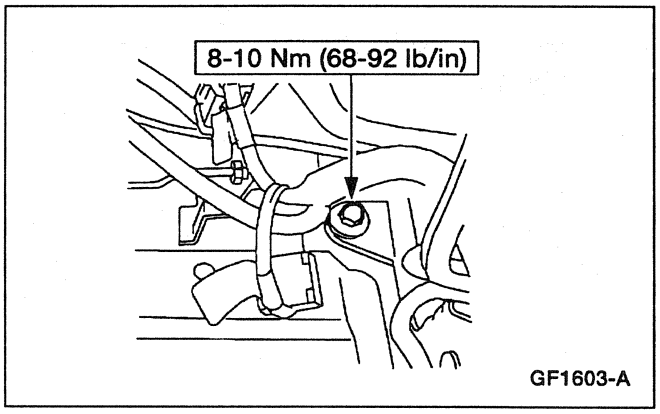

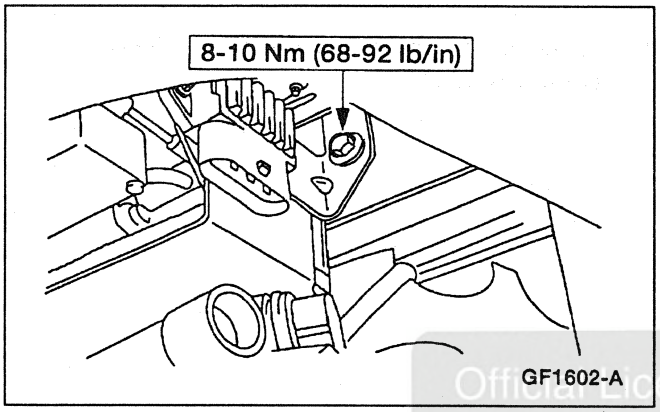

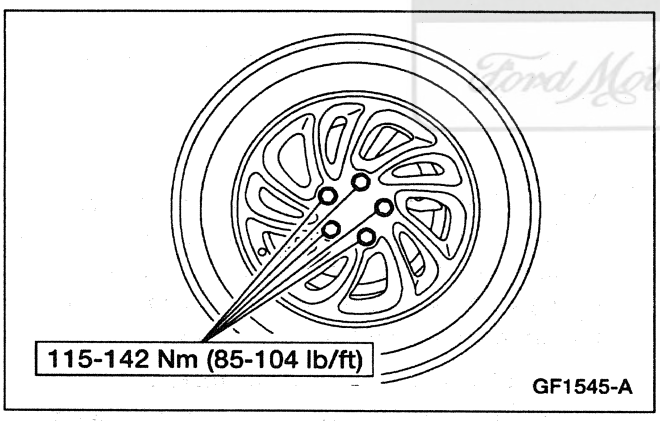

Official Licensed Product
Ford Motor Company

Drier

Removal

1. Remove the air compressor; refer to Air Compressor.

REMOVAL AND INSTALLATION (Continued)

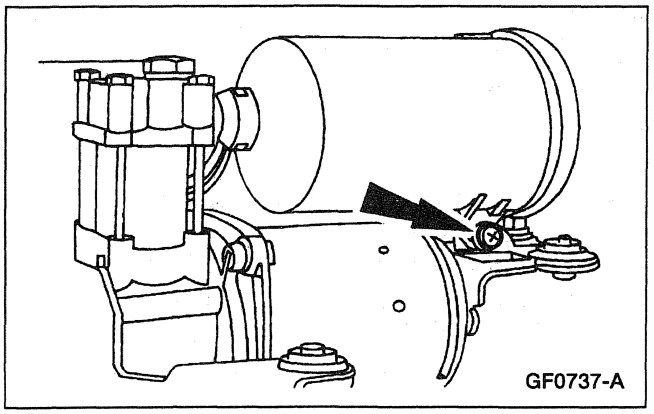

2. Remove the drier hold down screw.

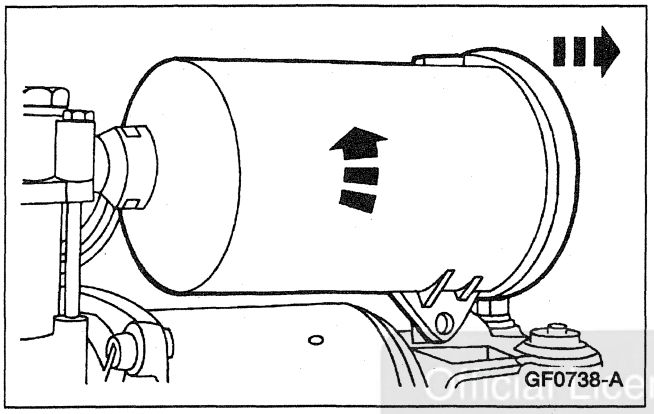

3. **NOTE:** Ensure that the O-ring at the drier nose does not fall off upon removal.

   Turn drier clockwise and remove from the air compressor.

Official Licensed Product
Ford Motor Company

Installation

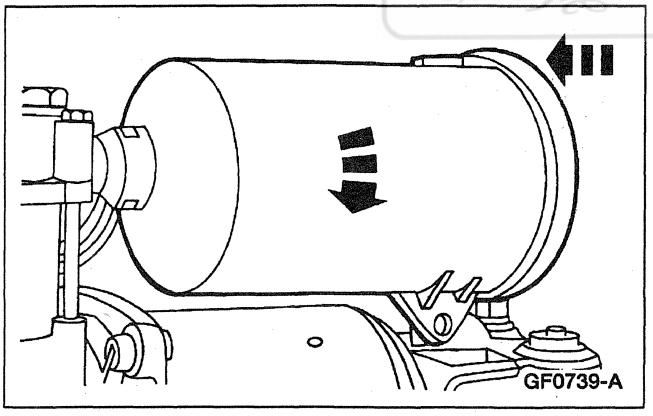

1. **NOTE:** Ensure that O-ring is on the drier nose upon installation for proper sealing.

   Position drier into air compressor turn counter clockwise to lock drier into place.

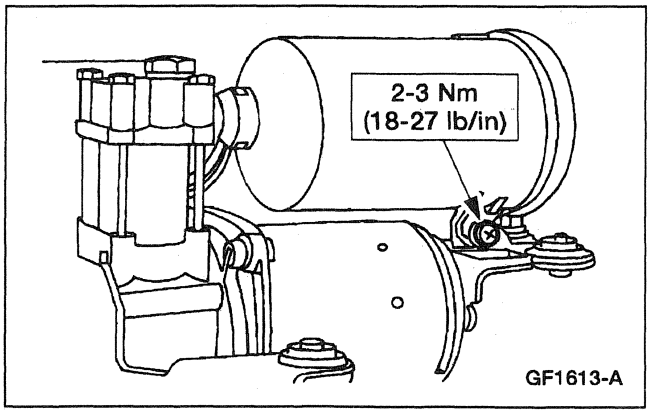

2. Install the drier hold down screw.

REMOVAL AND INSTALLATION (Continued)

3. Install the air compressor; refer to Air Compressor.

Control Module — Air Suspension

Refer to Section 419-10.

Air Spring — Rear

Removal

WARNING: DO NOT REMOVE AN AIR SPRING UNDER ANY CIRCUMSTANCES WHEN THERE IS PRESSURE IN THE AIR SPRING. DO NOT REMOVE ANY COMPONENTS SUPPORTING AN AIR SPRING WITHOUT EXHAUSTING THE AIR.

1. Vent the air springs; refer to Function Test.

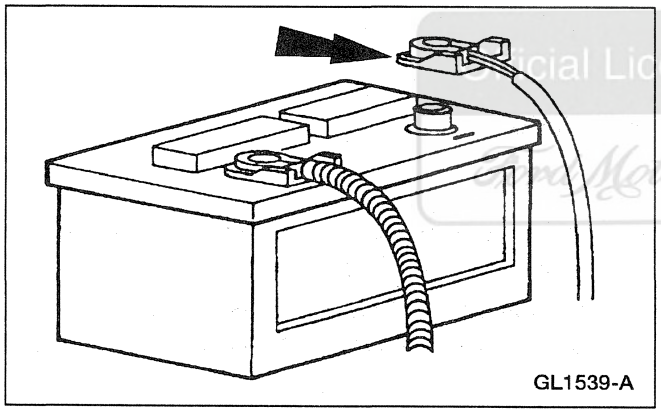

2. Disconnect the battery ground cable.

3. Raise and support vehicle; refer to Section 100-02.

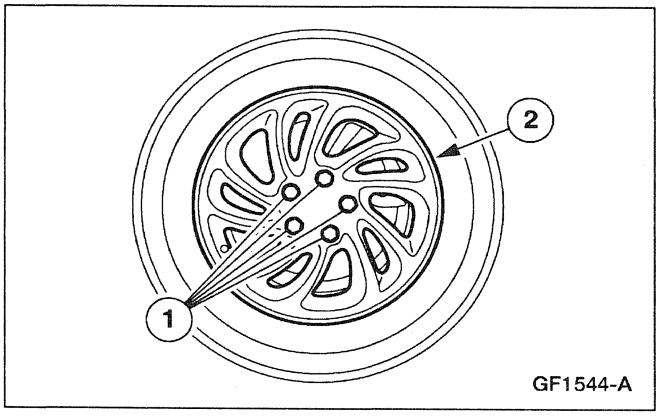

4. Remove the wheel and tire assembly.
   1 Remove the lug nuts.
   2 Remove the wheel and tire assembly.

REMOVAL AND INSTALLATION (Continued)

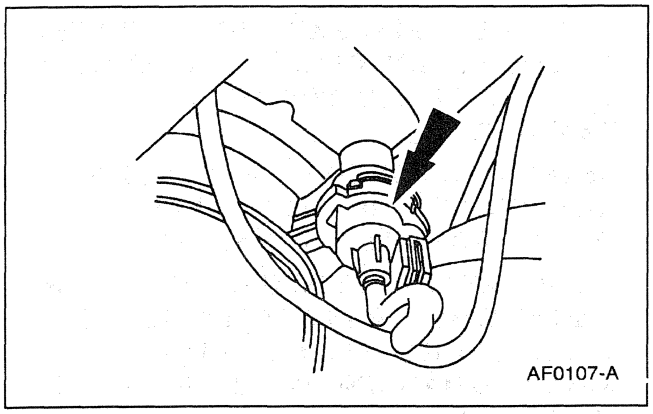

5. Remove the air spring solenoid; refer to Solenoid Valve.

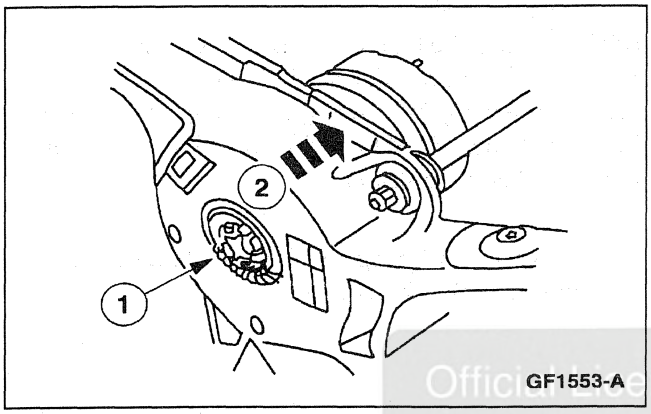

6. Separate the air spring from the rear suspension arm and bushing (5500).
   1 Release the plastic clips.
   2 Compress the air spring upward.

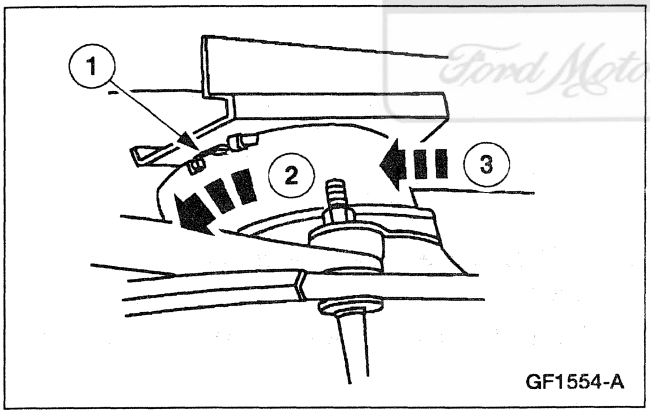

7. Separate the air spring from the body.
   1 Depress the metal locking tab.
   2 Rotate the air spring counterclockwise.
   3 Carefully remove the air spring from the vehicle.

Official Licensed Product
Ford Motor Company

Installation

WARNING: TO PREVENT INJURY, DO NOT ATTEMPT TO INSTALL OR INFLATE ANY AIR SPRING THAT HAS BECOME UNFOLDED. ANY AIR SPRING WHICH HAS UNFOLDED MUST BE REFOLDED OVER THE PISTON.

- **WHEN INSTALLING A NEW AIR SPRING, CARE MUST BE TAKEN NOT TO APPLY A LOAD TO THE SUSPENSION UNTIL SPRINGS HAVE BEEN INFLATED.**

REMOVAL AND INSTALLATION (Continued)

- **WHEN AIR SPRINGS ARE REPLACED THE AIR SUSPENSION HEIGHT SENSOR MUST BE CHECKED AND REPLACED IF DAMAGED.**
- **AFTER INFLATING AN AIR SPRING IN HANGING POSITION, IT MUST BE INSPECTED FOR PROPER SHAPE.**
- **DO NOT ATTEMPT TO INFLATE ANY AIR SPRING WHICH HAS BEEN COLLAPSED WHILE UNINFLATED FROM THE REBOUND HANGING POSITION TO THE JOUNCE STOP.**

NOTE: When the battery is disconnected and reconnected, some abnormal drive symptoms may occur while the vehicle relearns its adaptive strategy. The vehicle may need to be driven 16 km (10 mi) or more to relearn the strategy.

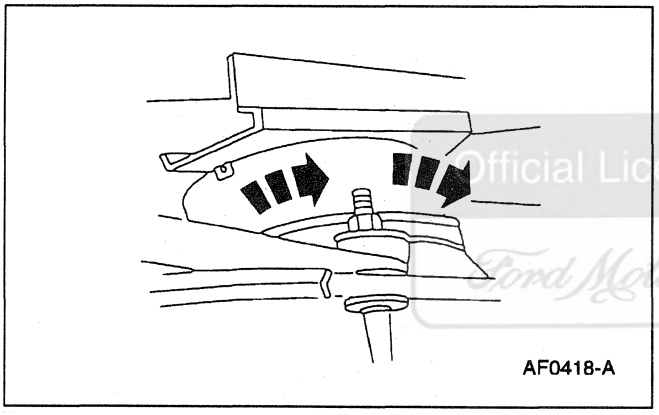
AF0418-A

1. Install the air spring into the body bracket and twist to lock in place.

Official Licensed Product
Ford Motor Company

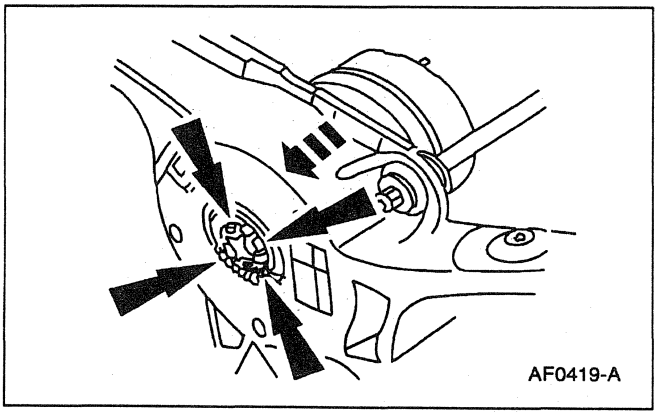
AF0419-A

2. **NOTE:** Make sure that plastic clips are locked in place.

   Install the air spring piston into rear suspension arm.

3. Install the air spring solenoid; refer to Solenoid Valve.

REMOVAL AND INSTALLATION (Continued)

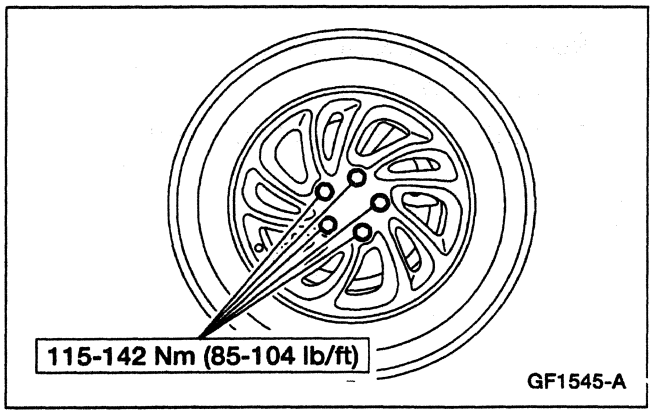

4. Install the wheel and tire assembly.

Air Spring — Shock Absorber, Front

Removal

WARNING: DO NOT REMOVE AN AIR SPRING UNDER ANY CIRCUMSTANCES WHEN THERE IS PRESSURE IN THE AIR SPRING. DO NOT REMOVE ANY COMPONENTS SUPPORTING AN AIR SPRING WITHOUT EXHAUSTING THE AIR TO PREVENT DAMAGE OR PERSONAL INJURY.

Official Licensed Product
Ford Motor Company

1. Vent the air springs; refer to Function Test.

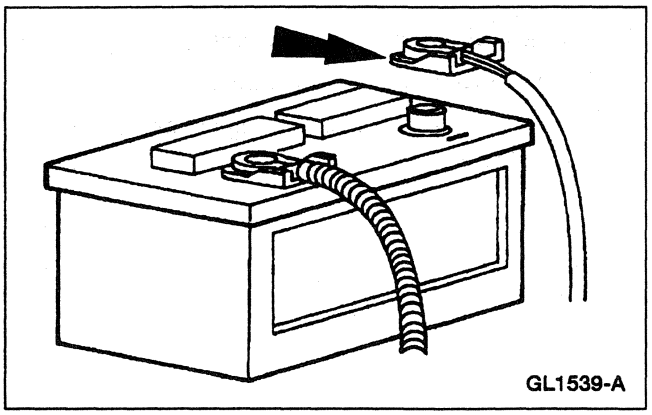

2. Disconnect the battery ground cable.

3. Raise and support the vehicle; refer to Section 100-02.

REMOVAL AND INSTALLATION (Continued)

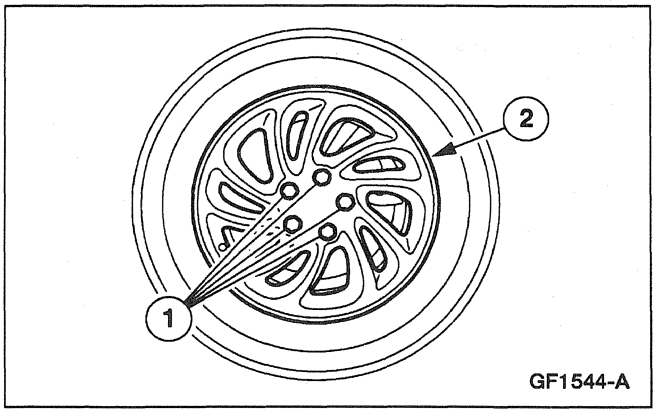

4. Remove the wheel and tire assembly.
   1 Remove the lug nuts.
   2 Remove the wheel and tire assembly.

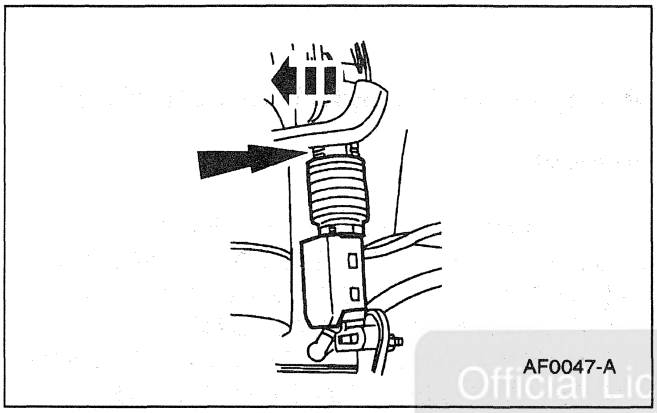

5. Position the air suspension height sensor (5359) out of the way.
   - Release the metal spring clip at the top mount of the height sensor.
   - Pop the height sensor off the ball stud.
   - Rotate the height sensor out of the way on the bottom mount.

Official Licensed Product
Ford Motor Company

6. Remove the air spring solenoid; refer to Solenoid Valve.

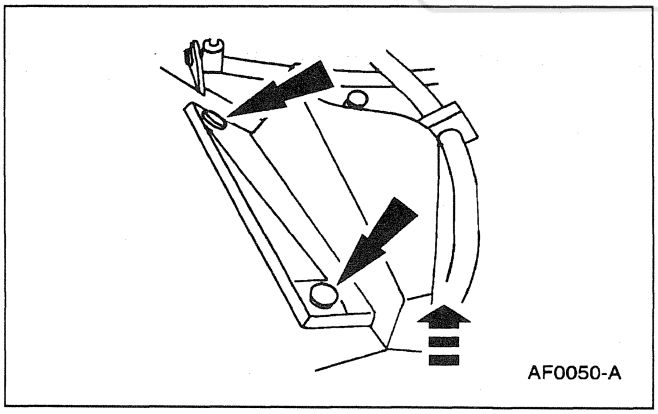

7. Remove the front air spring cover.
   - Remove the plastic pushpins.
   - Remove the front air spring cover from the vehicle.

REMOVAL AND INSTALLATION (Continued)

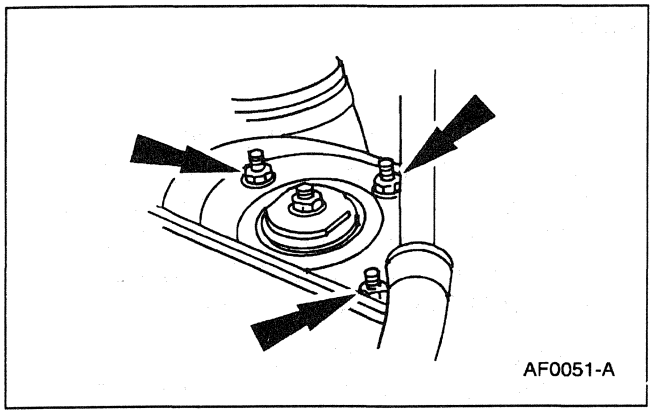
AF0051-A

8. ⚠ **CAUTION: Do not remove the front air spring and shock absorber large center nut as this may result in a permanent air leak through the top of the air spring.**

   Remove the air spring to shock tower retaining nuts and the shock absorber housing seal (18T003).

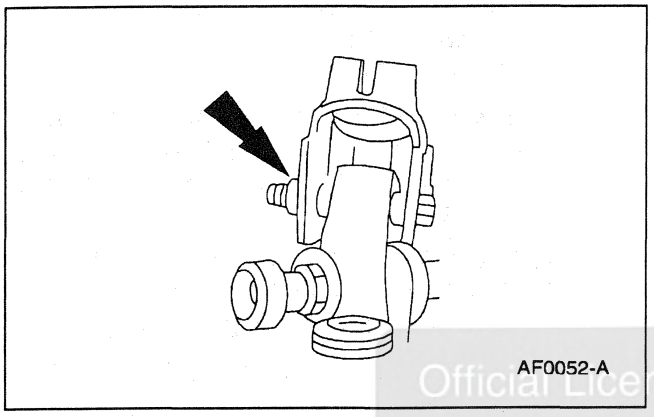
AF0052-A

9. Remove the front suspension lower arm nut and bolt and the front air spring and shock absorber.

Official Licensed Product
Ford Motor Company

REMOVAL AND INSTALLATION (Continued)

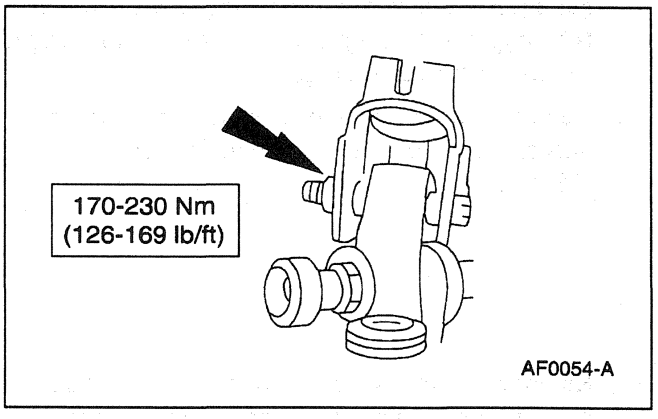

Installation

1. **WARNING: TO PREVENT INJURY, DO NOT ATTEMPT TO INSTALL OR INFLATE ANY AIR SPRING THAT HAS BECOME UNFOLDED. ANY AIR SPRING WHICH HAS UNFOLDED MUST BE REFOLDED OVER THE PISTON.**
   - **WHEN INSTALLING A NEW AIR SPRING, CARE MUST BE TAKEN NOT TO APPLY A LOAD TO THE SUSPENSION UNTIL SPRINGS HAVE BEEN INFLATED.**
   - **WHEN AIR SPRINGS ARE REPLACED THE AIR SUSPENSION HEIGHT SENSOR MUST BE CHECKED AND REPLACED IF DAMAGED.**
   - **AFTER INFLATING AN AIR SPRING IN HANGING POSITION, IT MUST BE INSPECTED FOR PROPER SHAPE.**
   - **DO NOT ATTEMPT TO INFLATE ANY AIR SPRING WHICH HAS BEEN COLLAPSED WHILE UNINFLATED FROM THE REBOUND HANGING POSITION TO THE JOUNCE STOP.**

Official Licensed Ford Motor Company

NOTE: When the battery is disconnected and reconnected, some abnormal drive symptoms may occur while the vehicle relearns its adaptive strategy. The vehicle may need to be driven 16 km (10 mi) or more to relearn the strategy.

To install, reverse the removal procedure.

- Check alignment of vehicle; refer to Section 204-00.

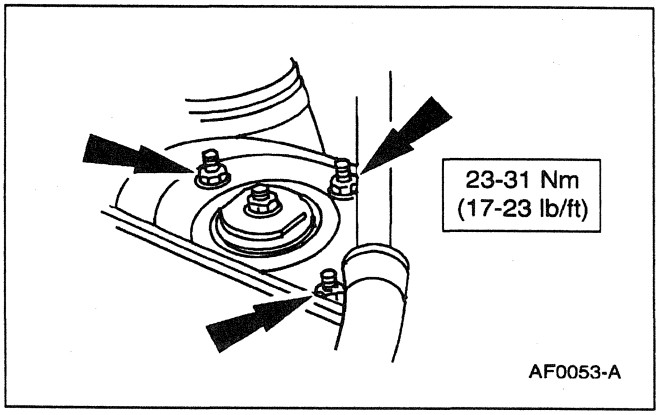

REMOVAL AND INSTALLATION (Continued)

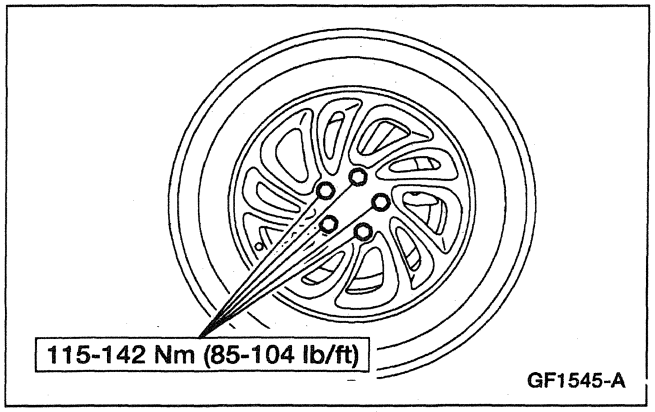

Solenoid Valve

Removal

WARNING: DO NOT REMOVE AN AIR SPRING UNDER ANY CIRCUMSTANCES WHEN THERE IS PRESSURE IN THE AIR SPRING. DO NOT REMOVE ANY COMPONENTS SUPPORTING AN AIR SPRING WITHOUT EXHAUSTING THE AIR TO PREVENT DAMAGE OR PERSONAL INJURY.

Official Licensed Ford Motor Company

1. **NOTE:** These procedures apply to both the front air spring and shock and the rear air spring. Vent the air spring; refer to Function Test.

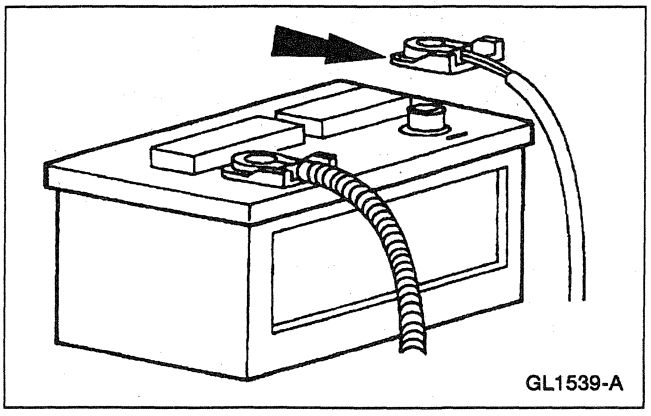

2. Disconnect the battery ground cable.

3. Raise and support the vehicle; refer to Section 100-02.

REMOVAL AND INSTALLATION (Continued)

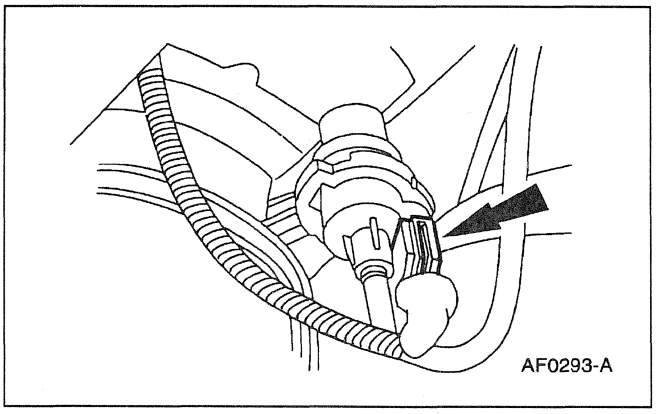

4. Disconnect the electrical connector from the air spring solenoid.

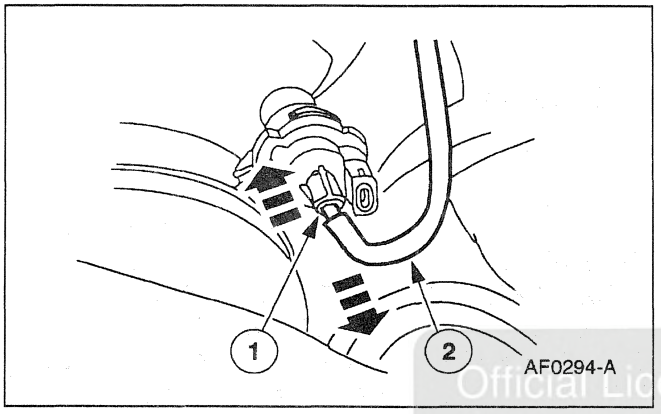

5. Remove the air line out of the air spring solenoid.
   1 Push up and hold the air line plastic ring.
   2 Remove the air line out of the air spring solenoid.

Official Licensed Product
Ford Motor Company

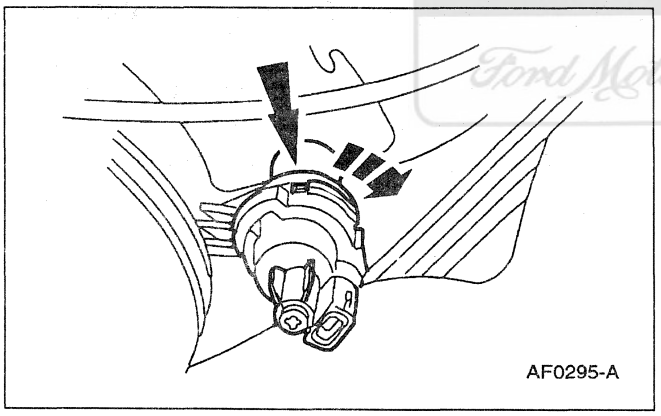

6. Remove the air spring solenoid retainer (5308).

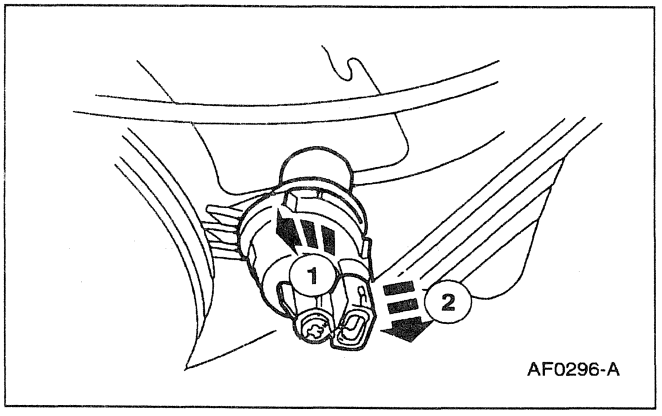

7. **NOTE:** The air spring solenoid has a two-stage solenoid valve pressure relief fitting similar to a radiator cap.

   Release air spring solenoid.
   1 Rotate the air spring solenoid counterclockwise to the first stop.
   2 Pull the air spring solenoid down to the second stop.

REMOVAL AND INSTALLATION (Continued)

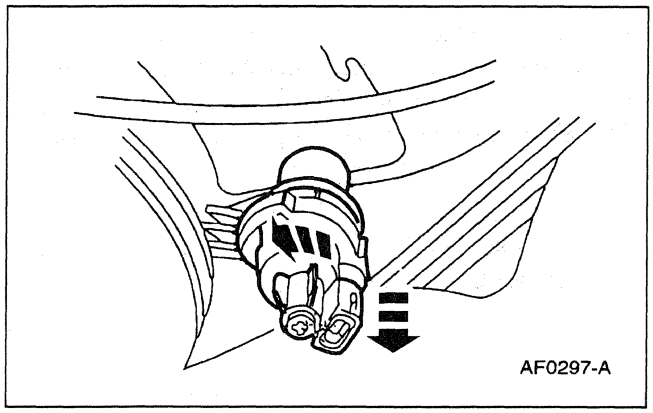

8. **WARNING: DO NOT FULLY RELEASE THE AIR SPRING SOLENOID UNTIL THE AIR IS COMPLETELY BLED FROM THE AIR SPRING TO PREVENT INJURY.**

   Rotate the air spring solenoid counterclockwise to the third stop and remove from the air spring solenoid housing.

Installation

WARNING: TO PREVENT INJURY, DO NOT ATTEMPT TO INSTALL OR INFLATE ANY AIR SPRING THAT HAS BECOME UNFOLDED. ANY AIR SPRING WHICH HAS UNFOLDED MUST BE REFOLDED OVER THE PISTON.

- **WHEN INSTALLING A NEW AIR SPRING, CARE MUST BE TAKEN NOT TO APPLY A LOAD TO THE SUSPENSION UNTIL SPRINGS HAVE BEEN INFLATED.**
- **WHEN AIR SPRINGS ARE REPLACED THE AIR SUSPENSION HEIGHT SENSOR MUST BE CHECKED AND REPLACED IF DAMAGED.**
- **AFTER INFLATING AN AIR SPRING IN HANGING POSITION, IT MUST BE INSPECTED FOR PROPER SHAPE.**
- **DO NOT ATTEMPT TO INFLATE ANY AIR SPRING WHICH HAS BEEN COLLAPSED WHILE UNINFLATED FROM THE REBOUND HANGING POSITION TO THE JOUNCE STOP.**

Official Licensed Product
Ford Motor Company

REMOVAL AND INSTALLATION (Continued)

NOTE: When the battery is disconnected and reconnected, some abnormal drive symptoms may occur while the vehicle relearns its adaptive strategy. The vehicle may need to be driven 16 km (10 mi) or more to relearn the strategy.

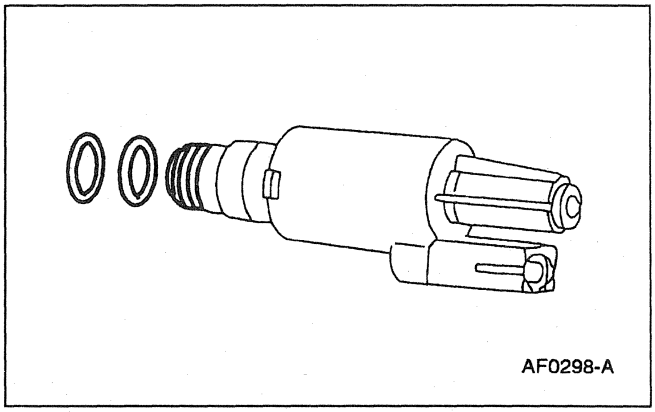
AF0298-A

1. Check solenoid valve O-rings for abrasion or cuts. Replace O-rings as required.

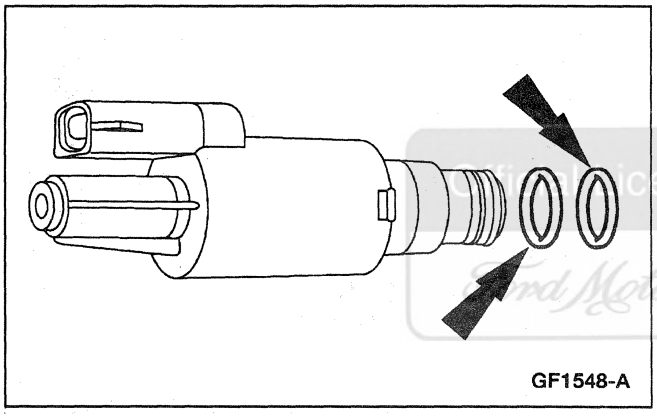
GF1548-A

2. Lightly apply Silicone Brake Caliper Grease and Dielectric Compound D7AZ-19A331-A or equivalent meeting Ford specification ESE-M1C171-A to the O-rings.

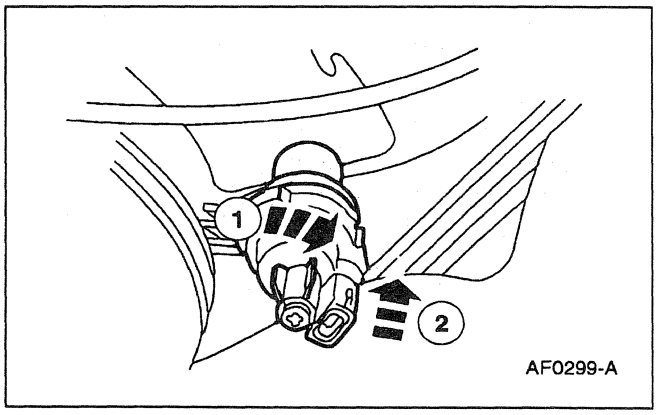

AF0299-A

3. Install the air spring solenoid into the housing.
   1 Insert the air spring solenoid into the housing and rotate clockwise to the first stop.
   2 Push the air spring solenoid upward to the second stop and rotate clockwise to the third stop.

Licensed Product
Ford Motor Company

REMOVAL AND INSTALLATION (Continued)

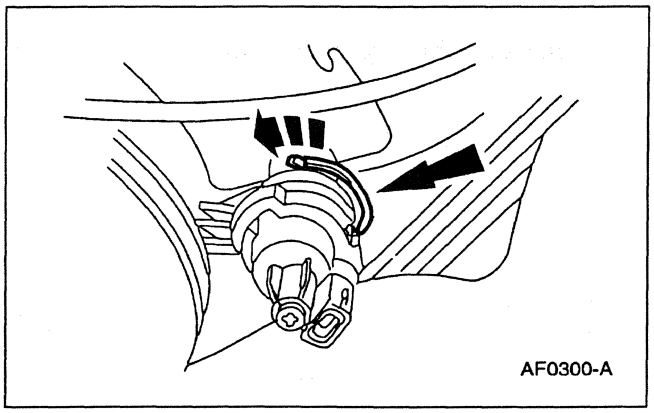

4. Install the air spring solenoid retainer.

NOTE: When installing the air line into the solenoid a maximum of 3 mm (1/8 in) of white air line must be inserted for secure installation.

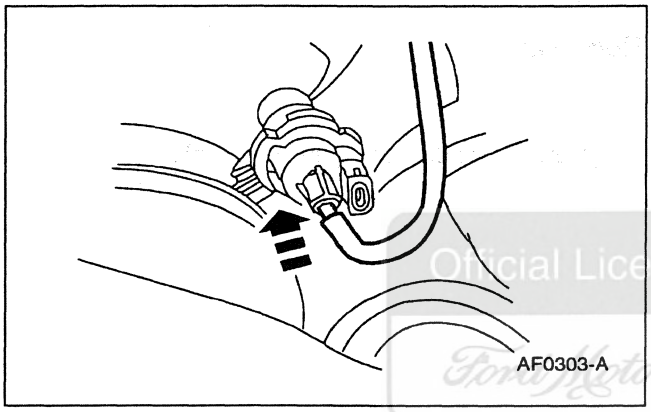

5. Insert the air line into the air spring solenoid.

Official Licensed Product
Ford Motor Company

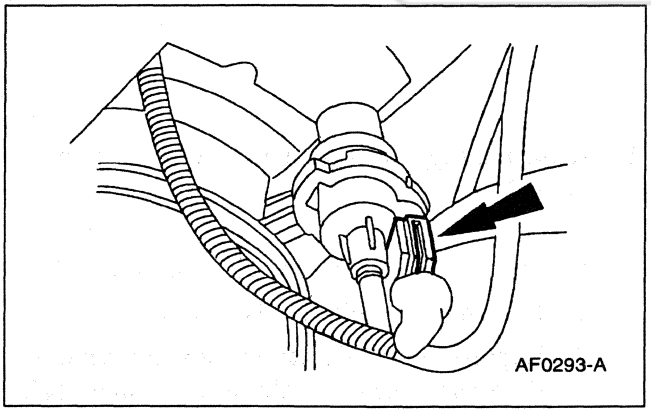

6. Connect the electrical connector to the air spring solenoid. Make sure the harness connector and rubber gasket are in place at bottom of connector cavity.

7. Refill the air spring; refer to the Air Spring Fill.

REMOVAL AND INSTALLATION (Continued)

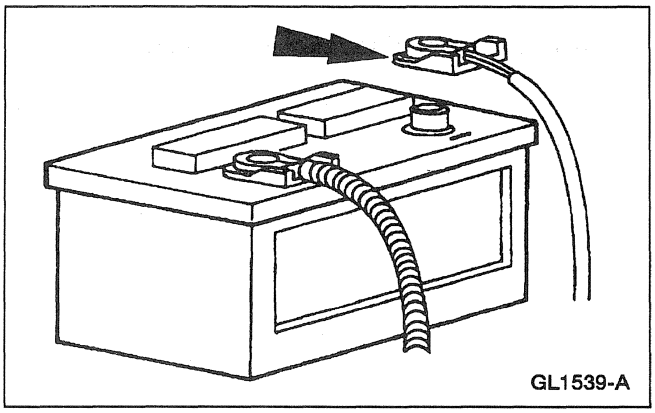

8. Connect the battery ground cable.

Height Sensor

Removal

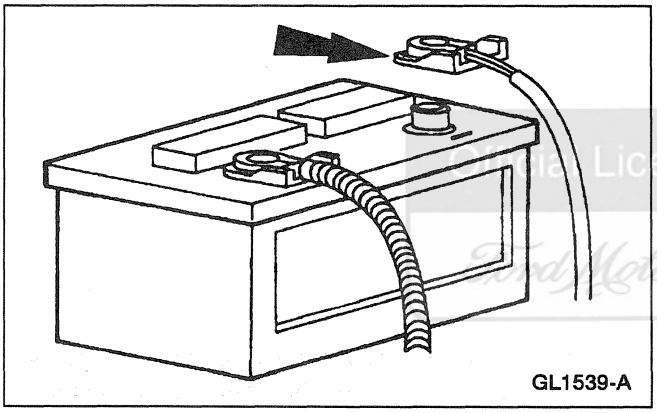

1. Disconnect the battery ground cable.

Ford Licensed Product
Ford Motor Company

2. Raise and support the vehicle; refer to Section 100-02.

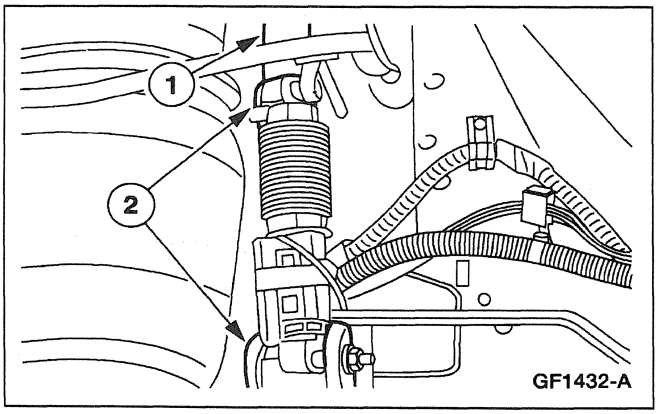

3. Remove the air suspension height sensor.
   1 Disconnect the electrical connector.
   2 Depress the metal retaining tabs and remove the air suspension height sensor from the ball studs.

REMOVAL AND INSTALLATION (Continued)

Installation

1. **NOTE:** When the battery is disconnected and reconnected, some abnormal drive symptoms may occur while the vehicle relearns its adaptive strategy. The vehicle may need to be driven 16 km (10 mi) or more to relearn the strategy.

   To install, reverse the removal procedure.

GENERAL PROCEDURES

Air Spring Fill

Special Tool(s)

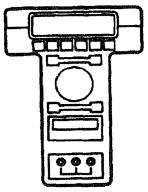 ST1217-A	New Generation STAR (NGS) Tester or equivalent 007-00500

Official Licensed Product
Ford Motor Company

1. Turn the air suspension switch OFF. Connect New Generation STAR (NGS) Tester to data link connector (14489) located on the front side of the RH shock tower.

2. **NOTE:** Raise hoist as required to remove the load to the suspension.

   Install battery charger to reduce battery drain.

3. Enter function test to pump appropriate air springs:
   - 212 LH Front-Air Spring.
   - 214 RH Front-Air Spring.
   - 216 LH Rear-Air Spring.
   - 218 RH Rear-Air Spring.

4. **NOTE:** Any further leveling (vent or compression) will be done when the vehicle is in normal operation on the ground. (Air suspension switch returned to ON after the vehicle is on the ground.)

   Immediately after completion of the air spring fill, inspect all air springs for proper inflation (no folds or creases).

GENERAL PROCEDURES (Continued)

Air Leaks

1. **NOTE:** A spray bottle with a soapy water solution is helpful in locating a small leak.

   To perform leak test, attach shop air supply to air compressor drier end or air line to suspect air spring.

2. Enter function test to vent suspect air spring solenoid.
   - Test 213-LH Front.
   - Test 215-RH Front.
   - Test 217-LH Rear.
   - Test 219-RH Rear.

3. Pump air spring to full up travel.

4. Listen and look for leaks.

5. If a leak is detected within the air compressor, replace the air compressor. If a leak is detected in a line, carefully cut the line with a sharp knife to ensure a good, clean, straight cut and install a replacement fitting from the air spring connector repair kit (5B321). If more line is required, it can be obtained in bulk.

Official Licensed Product
Ford Motor Company

Ride Height Adjustments

Special Tool(s)

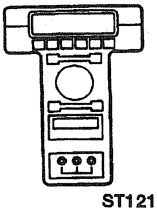 ST1217-A	New Generation STAR (NGS) Tester or equivalent 007-00500

1. Position the vehicle on an alignment rack or other level hoist that supports the vehicle by the tires.

2. Connect a New Generation Star (NGS) Tester to the air suspension test connector data link connector located on the front side of the RH shock tower.

GENERAL PROCEDURES (Continued)

3. Run Auto Test. DTC 11, 29 and 45 are accepted as passed.

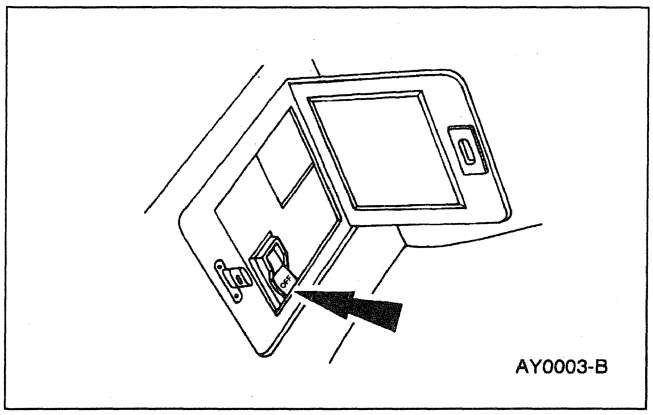

4. Turn the air suspension switch OFF.

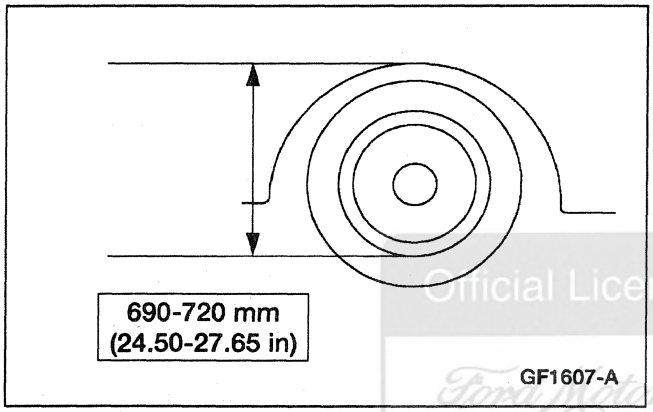

5. Measure from the bottom edge of the wheel to the wheel well lip on both front wheels.

Official Licensed Product
Ford Motor Company

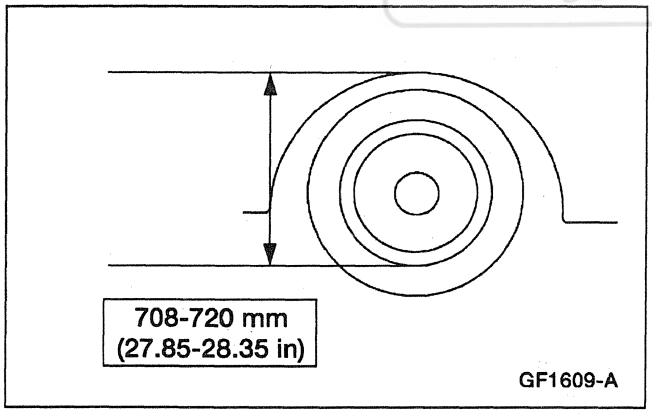

6. Measure from the bottom edge of the wheel to the wheel well lip on the left rear wheel.

7. Turn the ignition switch to the RUN position.

8. Remove the air suspension height sensor (5359) from the upper ball stud of the suspect wheel.

GENERAL PROCEDURES (Continued)

9. Enter the air suspension height sensor trim detection function for the suspect wheel.
   - LH Front Function 223.
   - RH Front Function 224.
   - Rear Function 225.

10. Slowly lengthen and shorten the air suspension height sensor while listening to the tone. (A steady tone indicates the air suspension height sensor is at trim length.)

11. Loosen the ball stud bracket retainer for the rear air suspension height sensor or the lower ball stud for the front air suspension height sensor.

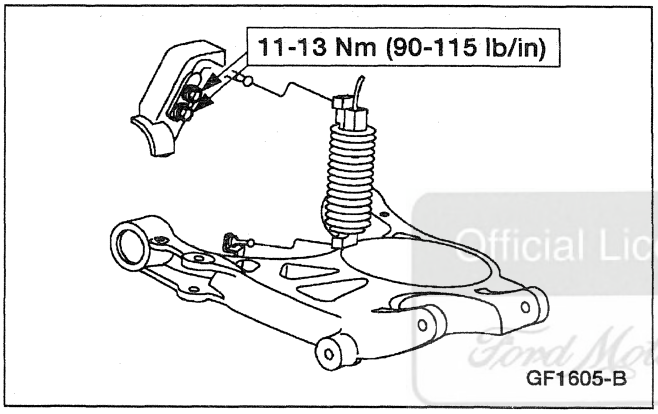

12. Adjust the ball stud until a steady tone indicates trim length of the air suspension height sensor. Tighten ball stud retainers to specification.

Official Licensed Product
Ford Motor Company

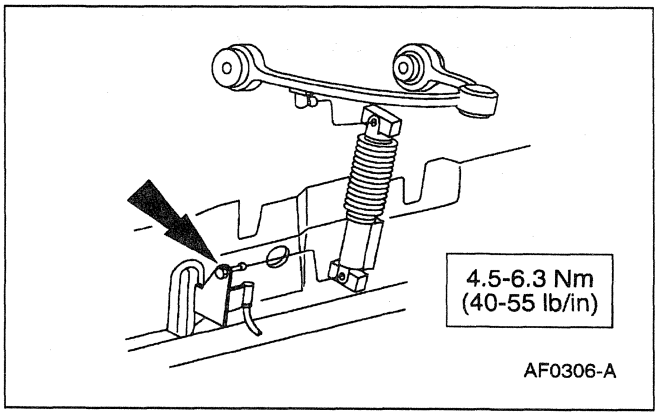

13. Turn air suspension switch on.

14. Repeat Steps 3 through 6 to verify the adjustment is complete.

SPECIFICATIONS

General Specifications

Item	Specification
Front Ride Height mm (in)	690-702 (27.15-27.65)
Rear Ride Height mm (in)	708-720 (27.85-28.35)
Silicone Brake Caliper Grease and Dielectric Compound D7AZ-19A331-A	ESA-M1C171-A

Torque Specifications

Description	Nm	Lb/Ft	Lb/In
Air Compressor-to-Compressor Bracket Bolts	8-10	—	68-92
Air Compressor Drier Screw	2-3	—	18-27
Battery Ground Cable Bolt	7-10	—	62-89
Compressor Bracket to Frame Screw	7.6-10.4	6-8	—
Control Module Retaining Screw	2.3-3.3	—	20-29
Front Ball Stud-to-Bracket	4.5-6.3	—	40-55

(Continued)

Torque Specifications

Description	Nm	Lb/Ft	Lb/In
Lug Nuts	115-142	85-104	—
Rear Air Suspension Height Sensor Upper Attachment-to-Frame Bolts	11-13	—	90-115
Rear Ball Stud Bracket-to-Rear Suspension Arm	21-29	16-21	—
Shock Absorber Electronic Steering Sensor	2-3	—	18-27
Shock Absorber to Lower Rear Suspension Arm and Bushing Nut	113-153	83-113	—
Shock Absorber-to-Front Suspension Lower Arm Nut	170-230	126-169	—
Upper Shock Mount to Body Attachment Nuts	23-32	17-23	—

Official Licensed Product
Ford Motor Company

SECTION 205-00 Driveline System — General Information

VEHICLE APPLICATION: Mark VIII

SUBJECT	PAGE
DESCRIPTION AND OPERATION	
Driveline System	205-00-2
DIAGNOSIS AND TESTING	
Driveline System	205-00-4
Component Tests	205-00-16
Companion Flange Runout Check — Circular	205-00-18
Driveline Vibration	205-00-16
Driveshaft Vibrates	205-00-18
Tooth Contact Pattern Check — Gearset	205-00-20
Inspection and Verification	205-00-4
Analysis of Leakage	205-00-7
Analysis of Vibration	205-00-8
Axle Noise	205-00-10
Noise Acceptability	205-00-4
Non-Axle Noise	205-00-10
Preliminary Diagnosis	205-00-4
Universal Joint (U-Joint) Inspection	205-00-4
Symptom Chart	205-00-13
GENERAL PROCEDURES	
Casting Porosity (Holes in Casting) Repair	205-00-21
SPECIFICATIONS	205-00-22

Official Licensed Product
Ford Motor Company

DESCRIPTION AND OPERATION

Driveline System

Driveline Component Locations

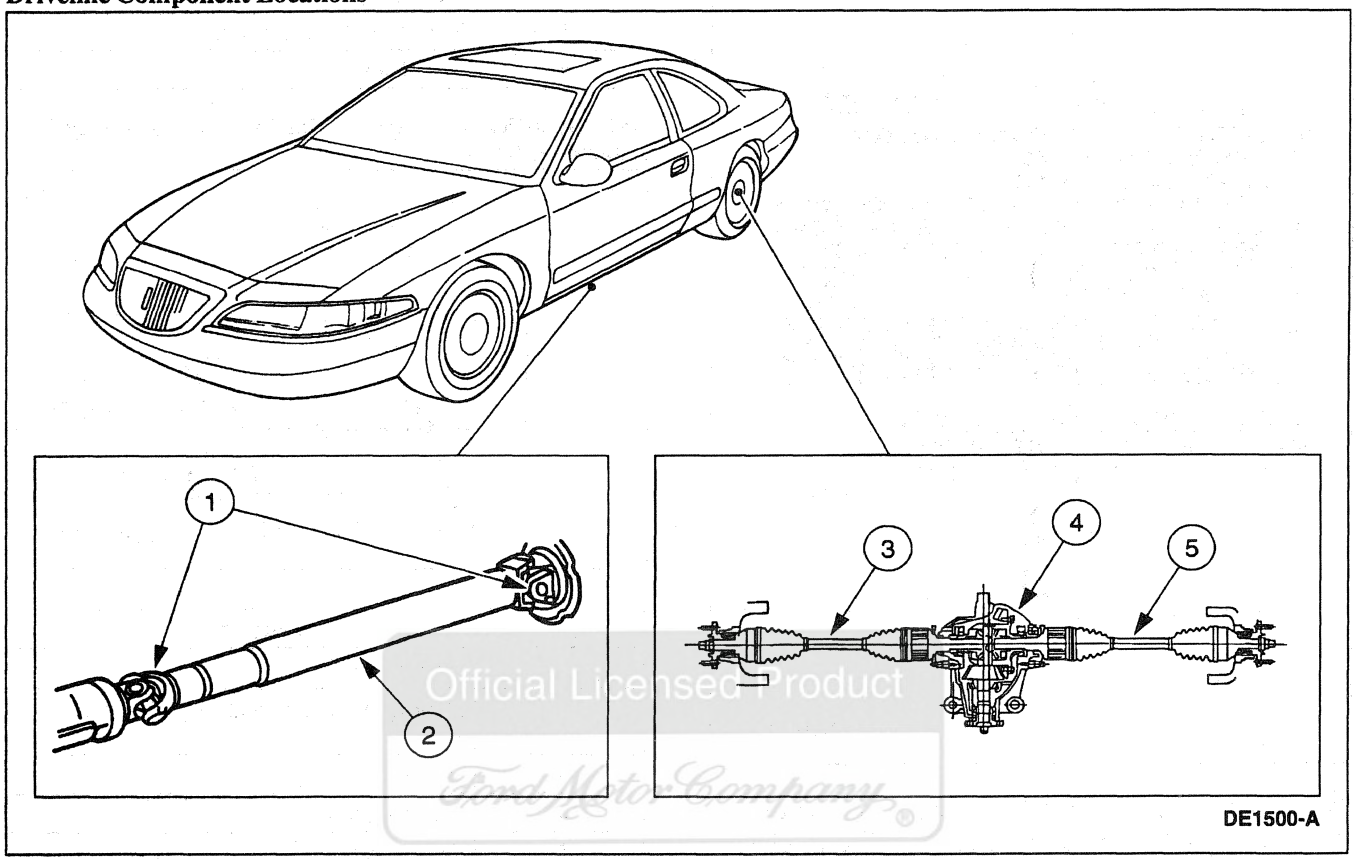

Official Licensed Product
Ford Motor Company

Item	Part Number	Description
1	4635	Universal Joints
2	4602	Driveshaft
3	3B436	Halfshaft (RH)

(Continued)

Item	Part Number	Description
4	4006	Rear Axle Housing
5	3B437	Halfshaft (LH)

The driveline transfers engine torque to the drive wheels. Power is transmitted through the transmission to the driveshaft (4602) and then to the axle which is connected to the halfshafts.

For additional information on the halfshaft, refer to Section 205-05.

For additional information on the driveshaft, refer to Section 205-01.

For additional information on the rear axle, refer to Section 205-02.

The engine angle is built into the engine mounts. If the engine angle is out of specification, the engine mounts must be inspected for damage; refer to Section 303-01.

DESCRIPTION AND OPERATION (Continued)

Vehicle Certification (VC) Label Example

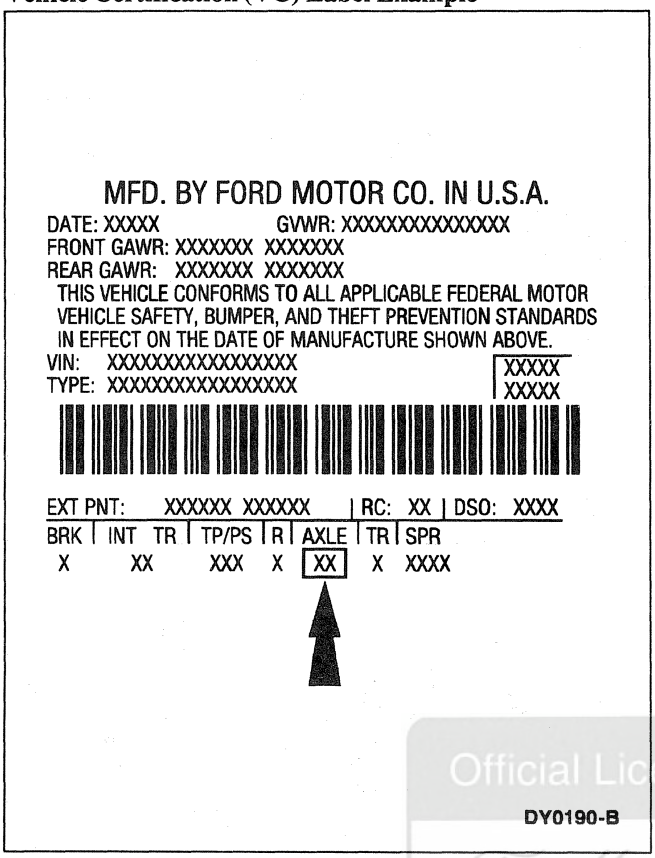

The vehicle certification (VC) label is located in the driver door jamb. The axle code is on the VC label. For additional information on the VC label, refer to Section 100-01.

Axle Identification Tag

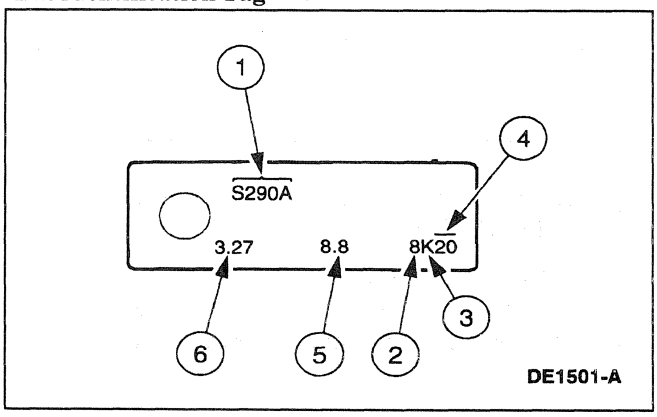

Item	Description
1	Plant Code
2	Build Year

(Continued)

Item	Description
3	Build Month
4	Build Day
5	Ring Gear Diameter (Inch)
6	Axle Ratio

Axle Identification Tag Denoting Interchangeability Affected Internally

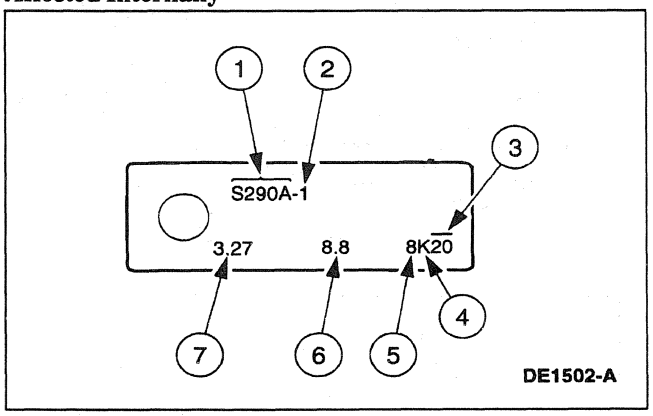

Item	Description
1	Plant Code
2	Denotes Interchangeability Affected Internally
3	Build Day
4	Build Month
5	Build Year
6	Ring Gear Diameter (Inch)
7	Axle Ratio

⚠ CAUTION: The axle identification tag is the official identifier. Do not damage the tag. Always reinstall the tag after removing it for axle inspection/repair.

The plant code denotes a particular axle design and specific ratio. In addition, the plant code will not change as long as that particular axle assembly never undergoes an external design change. If, however, an internal design change takes place during the production life of the axle and that internal change affects parts interchangeability, a dash and numerical suffix is added to the plant code. This means that as an assembly both axles are interchangeable; however, internally they are different. Therefore, each requires different internal parts at the time of repair.

Official Licensed Product
Ford Motor Company

DIAGNOSIS AND TESTING

Driveline System

Special Tool(s)

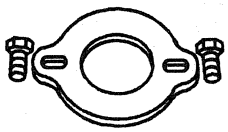 ST1268-A	Clamp Plate 205-320 (T92L-4851-C)
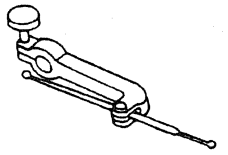 ST1348-A	Clutch Housing Alignment Adapter 308-021 (T75L-4201-A)
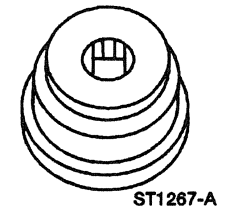 ST1267-A	Companion Flange Runout Gauge 205-319 (T92L-4851-B)
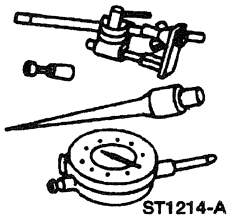 ST1214-A	Dial Indicator with Bracketry 100-002 (TOOL-4201-C) or Equivalent
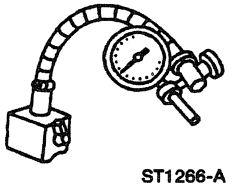 ST1266-A	Dial Indicator/Magnetic Base 100-D002 (D78P-4201-B) or Equivalent

Inspection and Verification

Certain axle and driveline trouble symptoms are also common to the engine (6007) , transmission (7003) , wheel bearings, tires, and other parts of the vehicle. For this reason, be sure that the cause of the trouble is in the axle before adjusting, repairing, or replacing any of its parts. Refer to Section 100-04.

Universal Joint (U-Joint) Inspection

WARNING: THE ELECTRICAL POWER TO THE AIR SUSPENSION SYSTEM MUST BE SHUT OFF PRIOR TO HOISTING, JACKING OR TOWING AN AIR SUSPENSION VEHICLE. THIS CAN BE ACCOMPLISHED BY TURNING OFF THE AIR SUSPENSION SWITCH. FAILURE TO DO SO CAN RESULT IN UNEXPECTED INFLATION OR DEFLATION OF THE AIR SPRINGS, WHICH CAN RESULT IN SHIFTING OF THE VEHICLE DURING THESE OPERATIONS.

Place the vehicle on a frame hoist and rotate the driveshaft (4602) by hand. Check for rough operation or seized U-joints. Replace the U-joint if it shows signs of seizure, excessive wear, or improper seating. Refer to Section 205-01.

Noise Acceptability

A gear-driven unit will produce a certain amount of noise. Some noise is acceptable and audible at certain speeds or under various driving conditions such as a newly paved blacktop road. Slight noise is not detrimental to the operation of the axle and is considered normal.

Preliminary Diagnosis

Question the Customer

The preliminary diagnosis starts with the customer interview. The history of the concern must be investigated: When was it first noticed? Did it appear suddenly or gradually? Did any abnormal occurrence coincide with or precede its appearance (such as pothole or curb impacts, minor collisions, etc.)? Were any repair procedures performed or parts replaced? It is also necessary to know any special conditions affecting the appearance and degree of the concern, such as road speed, type of road, drive mode, engine temperature, ambient temperature, etc.

A gradual appearance of the concern indicates a deterioration of a component, such as tires, halfshafts or front wheel bearings.

A sudden appearance of the concern could indicate a lost wheel balance weight or frozen constant velocity (CV) joint.

Official Licensed Motor Company

DIAGNOSIS AND TESTING (Continued)

Road Test

A road test is mandatory for any customer concern of noise/vibration that is not verified by the on-hoist check of chassis components. The Vehicle Road Test Evaluation form is arranged to record the conditions heard or felt during this test.

The road test form lists four operating conditions or modes in which some axle noises come and go: DRIVE, CRUISE, COAST, and FLOAT.

Mode	Conditions
DRIVE	Accelerating the vehicle; a definite throttle depression applying engine torque.
CRUISE	Maintaining a constant speed with the throttle applied.
COAST	Decelerating with the throttle closed.
FLOAT	Controlled deceleration; backing the throttle continually to prevent either braking or accelerating torque from the engine.

Operate the vehicle in all four modes and record those in which the noise occurs. Write down the kilometers-per-hour (miles-per-hour) range at which both noise and vibration occur. Evaluate rear axle noise with the transmission in DIRECT DRIVE and not in OVERDRIVE. Transmission noise can be mistaken for rear axle noise when in OVERDRIVE.

Official Licensed Product
Ford Motor Company

DIAGNOSIS AND TESTING (Continued)

Vehicle Road Test Evaluation Form

VEHICLE ROAD TEST EVALUATION

Road Test Evaluations:

1. Does the problem occur with engine, driveshaft, or wheel speed?
   - Engine ❑
   - Driveshaft ❑
   - Wheel ❑
2. Is the problem road speed dependent? (Occurs at the same vehicle speed independent of transmission gear).
   - Yes ❑
   - No ❑
3. Is the problem engine speed dependent? (Occurs at the same engine rpm, independent of transmission gear).
   - Yes ❑
   - No ❑
4. If the problem is engine speed dependent, perform a neutral engine runup (NERU), and compare rpm's to road rpm's.
   - Same as NERU ❑
   - Different than NERU ❑
5. Is the problem drive mode dependent? (Occurs in drive, cruise, coast/float).
   - Drive ❑ Speed_____
   - Cruise ❑ Speed_____
   - Coast ❑ Speed_____
   - Float ❑ Speed_____
6. Is the problem acceleration rate dependent? (Light, medium or heavy throttle).
   - Light ❑
   - Medium ❑
   - Heavy ❑
7. Does the problem occur from a stop?
   - Yes ❑
   - No ❑
8. Is the problem transmission gear dependent? (Occurs in overdrive, but not direct drive).
   - Yes ❑
   - No ❑
9. Does the problem occur on turns?
   - Yes ❑
   - No ❑
10. Does the problem only occur when going from reverse to drive or drive to reverse?
    - Yes ❑
    - No ❑

DE1351-B

Ford Motor Company

DIAGNOSIS AND TESTING (Continued)

Analysis of Leakage

Clean up the leaking area enough to identify the exact source.

A plugged axle housing vent can cause excessive pinion seal lip wear due to internal pressure buildup.

Make sure axle lubricant level is 6-14 mm (1/4-9/16 inch) below the bottom of the fill hole.

Axle Vent

NOTE: If the vent cannot be cleared, it must be replaced.

A plugged vent will cause excessive seal lip wear due to internal pressure buildup. If a leak occurs, check the vent. Make sure the vent hose is not kinked. Remove the hose from the vent nipple and clear the hose of any foreign material. While the hose is removed, pass a length of mechanics wire or a small diameter Allen wrench in and out of the vent to clean it. Connect the hose when done.

Flange Yoke Seal

Leaks at the axle drive pinion seal originate for the following reasons:

- Seal was not properly installed.
- Poor quality seal journal surface.

Any damage to the seal bore (dings, dents, gouges, or other imperfections) will distort the seal casing and allow leakage past the outer edge of the axle drive pinion seal.

The axle drive pinion seal can be torn, cut, or gouged if it is not installed carefully. The spring that holds the axle drive pinion seal against the companion flange may be knocked out and allow leakage past the lip.

The rubber lips can occasionally become hard (like plastic) with cracks at the oil lip contact point. The contact point on the companion flange may blacken, indicating excessive heat. Marks, nicks, gouges, or rough surface texture on the seal journal of the companion flange will also cause leaks.

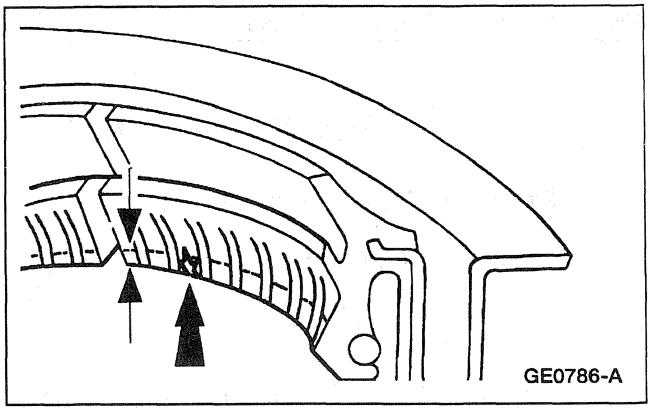

Axle drive pinion seal wear 1.27 mm (0.050 inch) or greater is considered excessive.

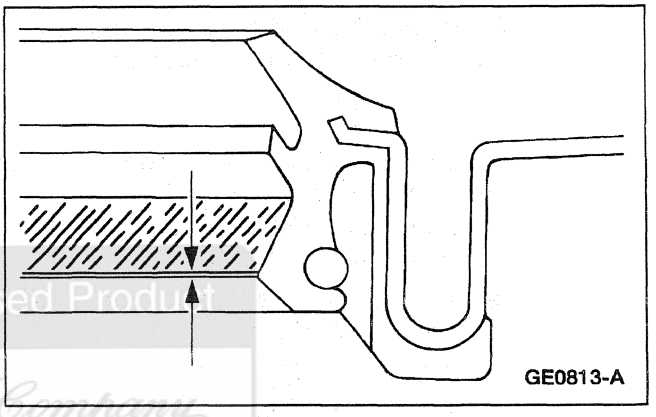

The companion flange must be replaced if any of these conditions exist.

Metal chips or sand trapped at the sealing lip can also cause oil leaks. This can cause a wear groove on the companion flange and heavy pinion seal wear.

When a seal leak occurs, replace the seal and check the vent and the vent hose to make sure they are clean and free of debris.

Official Licensed Product
Ford Motor Company

DIAGNOSIS AND TESTING (Continued)

Drive Pinion Nut

⚠ CAUTION: Be sure to follow the correct procedure for setting the bearing preload when the nut is installed. Refer to Section 205-02.

On some high-mileage units, oil may leak past the threads of the pinion nut. This condition can be corrected by removing the nut and applying Pipe Sealant with Teflon® D8AZ-19554-A or equivalent meeting Ford specification WSK-M2G350-A2 on the threads and nut face.

Differential Seals

Stub shaft pilot bearing housing seals are susceptible to the same kinds of damage as axle drive pinion seals if improperly installed. The seal bore must be clean and the lip handled carefully to avoid cutting or tearing it. The seal journal surface must be free of nicks, gouges, and rough surface texture.

For additional information on differential seals, refer to Section 205-02.

Analysis of Vibration

Few vibration conditions are caused by the rear axle. On a vibration concern, follow the diagnosis procedure in Section 100-04 unless there is a good reason to suspect the axle.

Tires

⚠ WARNING: DO NOT BALANCE THE WHEELS AND TIRES WHILE THEY ARE MOUNTED ON THE VEHICLE. POSSIBLE TIRE DISINTEGRATION/DIFFERENTIAL/HALFSHAFT FAILURE COULD RESULT, CAUSING PERSONAL INJURY/EXTENSIVE COMPONENT DAMAGE. USE AN OFF-VEHICLE WHEEL AND TIRE BALANCER ONLY.

Most vibration in the rear end is caused by tires or driveline angle.

Vibration is a concern with modern, high-mileage tires if they are not "true" both radially and laterally. They are more susceptible to vibration around the limits of radial and lateral runout of the tire and wheel assembly. They also require more accurate balancing. Wheel and tire runout checks, truing and balancing are normally done before axle inspection; refer to Section 204-04.

Driveline Angle

Driveline angularity is the angular relationship between the engine crankshaft (6303) , the driveshaft , and the rear axle pinion. Factors determining driveline angularity include ride height, rear spring, and engine mounts.

Ford Motor Company Licensed Product

Driveline Angle

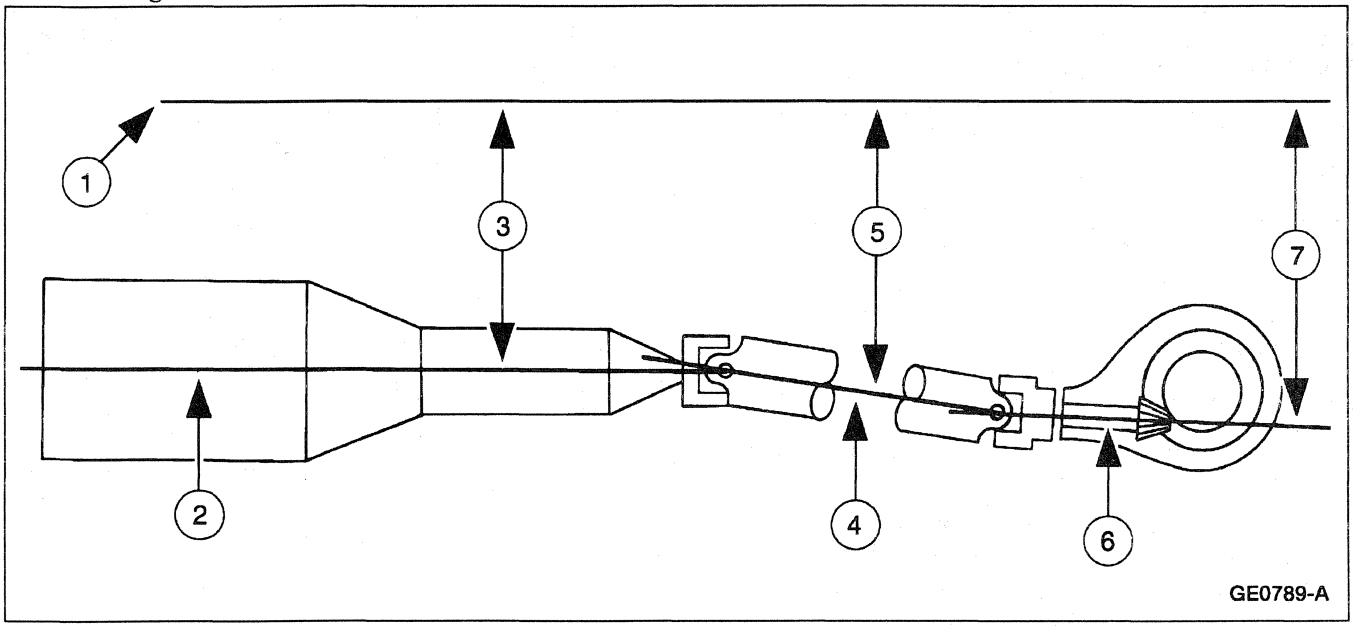

DIAGNOSIS AND TESTING (Continued)

Item	Description
1	Bottom of the Frame
2	Engine Crankshaft Centerline
3	Engine Angle
4	Driveshaft and Coupling Shaft Centerline

(Continued)

Item	Description
5	Driveshaft and Coupling Shaft Angle
6	Rear Axle Pinion Centerline
7	Axle Pinion Angle

An incorrect driveline (pinion) angle can often be detected by the driving condition in which the vibration occurs.

- A vibration during coasting from 72 to 56 km/h (45 to 35 mph) is often caused by a high axle pinion angle.
- A vibration during acceleration from 56 to 72 km/h (35 to 45 mph) may indicate a low pinion angle.

When these conditions exist, check the driveline angles.

If the tires and driveline angle are not the cause, perform the NVH tests to determine whether the concern is caused by a condition in the axle. Refer to Section 100-04.

Universal Joint (U-Joint) Wear

WARNING: THE ELECTRICAL POWER TO THE AIR SUSPENSION SYSTEM MUST BE SHUT OFF PRIOR TO HOISTING, JACKING OR TOWING AN AIR SUSPENSION VEHICLE. THIS CAN BE ACCOMPLISHED BY TURNING OFF THE AIR SUSPENSION SWITCH. FAILURE TO DO SO CAN RESULT IN UNEXPECTED INFLATION OR DEFLATION OF THE AIR SPRINGS, WHICH CAN RESULT IN SHIFTING OF THE VEHICLE DURING THESE OPERATIONS.

Place the vehicle on a frame hoist and rotate the driveshaft by hand. Check for rough operation or seized U-joints. Replace the U-joint if it shows signs of seizure, excessive wear, or improper seating. Refer to Section 205-01.

Wheel Hub Flange Bolt Circle Runout

NOTE: The brake discs must be removed to perform all runout measurements.

1. Position the Dial Indicator with Bracketry perpendicular to the wheel hub bolt, as close to the hub face as possible. Zero the indicator to allow the pointer to deflect either way.

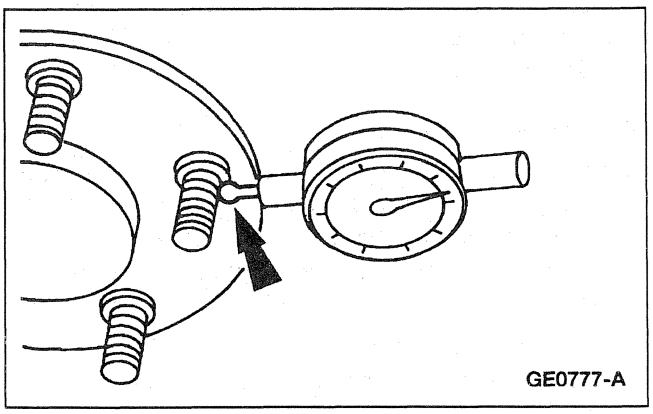

2. Rotate the hub until the next bolt is contacted. Record the measurement and continue until each bolt is checked. The difference between the maximum and minimum contact readings will be the total wheel hub bolt pattern runout. The runout must not exceed 0.38 mm (0.015 inch).

Pilot Runout

1. Position the Dial Indicator with Bracketry with the Clutch Housing Alignment Adapter to the pilot, as close to the hub face as possible. Zero the indicator to allow the pointer to deflect either way.

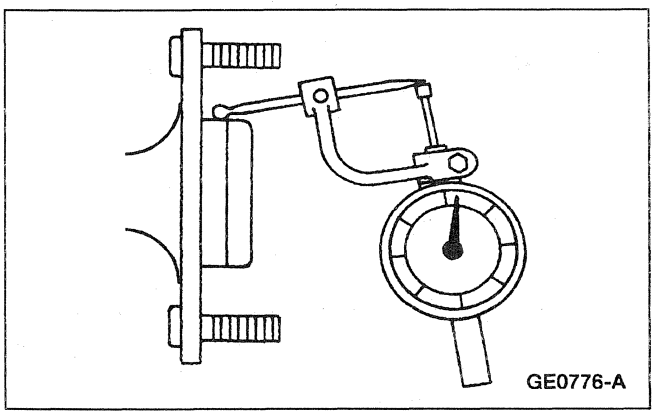

Official Licensed Product Motor Company

DIAGNOSIS AND TESTING (Continued)

2. Rotate the hub one full turn and note the maximum and minimum readings. The difference between the maximum and minimum readings will be the total pilot runout. Pilot runout must not exceed 0.15 mm (0.006 inch).

Wheel Hub Face Runout

1. Position the Dial Indicator with Bracketry on the wheel hub face, as close to the outer edge as possible. Zero the indicator to allow the pointer to deflect either way.

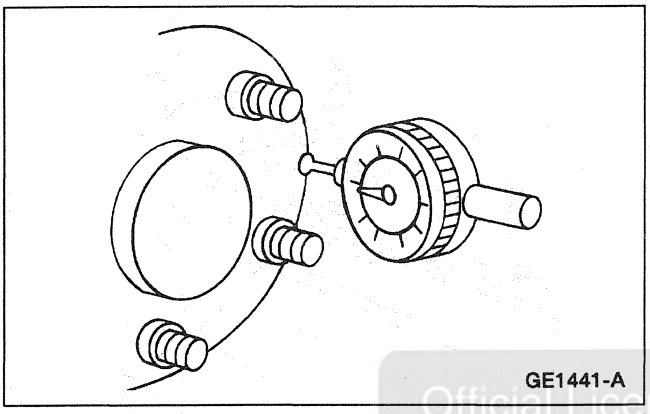

2. Rotate the hub one full turn and note the maximum and minimum readings. The difference between the maximum and minimum readings will be the total face runout. The runout must not exceed 0.254 mm (0.010 inch).

Drive Pinion Stem and Companion Flange

Check the companion flange runout when all other checks have failed to show the cause of vibration.

One cause of excessive companion flange runout is improper installation of the axle drive pinion seal. Check to see if the spring on the seal lip has been dislodged before replacing the ring gear and pinion.

Halfshafts, Rear Wheel

NOTE: Constant velocity (CV) joints must not be replaced unless disassembly and inspection reveals unusual wear; refer to Section 205-05.

NOTE: While inspecting the boots, watch for indentations (''dimples'') in the boot convolutions. Indentations must be removed.

- Inspect the boots for evidence of cracks, tears, or splits.
- Inspect the underbody for any indication of grease splatter near the boots outboard and inboard locations. This is an indication of boot/clamp damage.

Non-Axle Noise

There are several components, which when subject to certain conditions, can produce sound similar to axle noise. These components are the exhaust, the tires, roof racks, the power steering pump, auxiliary fluid coolers and the trim mouldings.

- The pitch of the exhaust can sound like gear whine.
- Tires — especially snow tires — can have a high-pitched tread whine or roar similar to gear noise. Radial tires, to some degree, have this characteristic. Any non-standard tire with an unusual tread construction may also emit a roar or whine-type noise.
- Trim, grille, and mouldings can also cause whistling or whining noises.

Make sure that none of these are the cause of the noise before proceeding with axle teardown and diagnosis.

Official Licensed Product
Ford Motor Company

Axle Noise

NOTE: Before disassembling the axle to diagnose and correct gear noise, eliminate the tires, exhaust, trim items, roof racks, and wheel bearings as possible causes.

The noises described as follows usually have specific causes that can be diagnosed by observation as the unit is disassembled. The initial clues are the type of noise heard during the road test.

Gear Howl and Whine

Howling or whining of the ring gear and pinion is due to an improper gear pattern, gear damage or improper bearing preload.

Bearing Whine

Bearing whine is a high-pitched sound similar to a whistle. It is usually caused by worn/damaged pinion bearings, which are operating at driveshaft speed. Bearing noise occurs at all driving speeds. This distinguishes it from gear whine which usually comes and goes as speed changes.

DIAGNOSIS AND TESTING (Continued)

As noted, pinion bearings make a high-pitched, whistling noise, usually at all speeds. If however there is only one pinion bearing that is worn/damaged, the noise may vary in different driving phases. Pinion bearings must not be replaced unless they are scored or damaged or there is a specific pinion bearing noise. A worn/damaged bearing will normally be obvious at disassembly. Examine the large end of the rollers for wear. If the pinion bearings original blend radius has worn to a sharp edge, the pinion bearing must be replaced.

NOTE: A low-pitched rumble normally associated with a worn/damaged wheel bearing can be caused by the exterior luggage rack or tires.

A wheel bearing noise can be mistaken for a pinion bearing noise. Check the wheel bearing for rotating smoothness and end play. Replace as required.

Chuckle

Chuckle that occurs on the coast driving phase is usually caused by excessive clearance between the differential gear hub and the differential case bore.

Damage to a gear tooth on the coast side can cause a noise identical to a chuckle. A very small tooth nick or ridge on the edge of a tooth can cause the noise.

Clean the gear tooth nick or ridge with a small grinding wheel. If the damaged area is larger than 3.2 mm (1/8 inch), replace the gearset.

To check the ring gear and pinion, remove as much lubricant as possible from the gears with clean solvent. Wipe the gears dry or blow them dry with compressed air. Look for scored or damaged teeth. Also look for cracks or other damage.

If either gear is scored or damaged badly, the ring gear and pinion must be replaced.

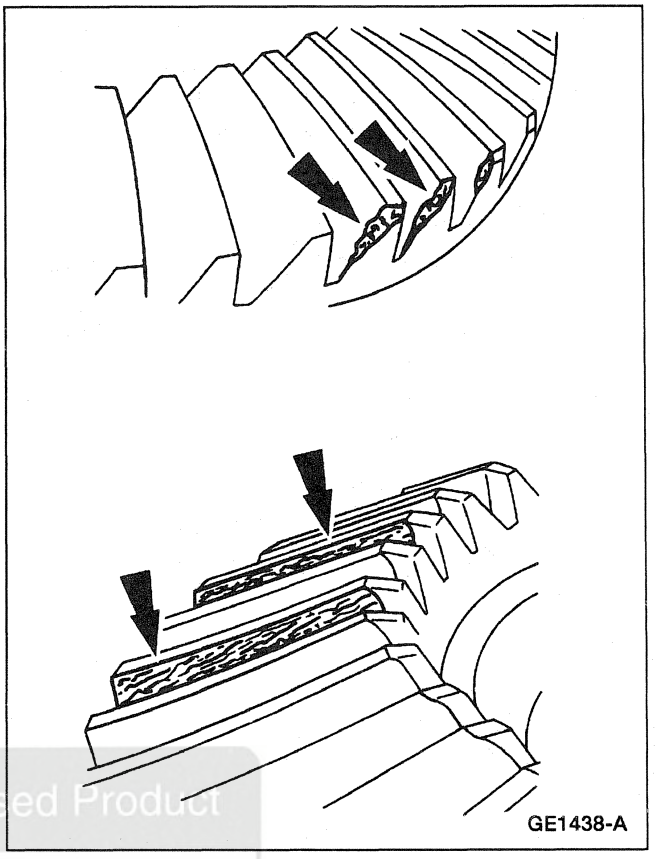

If metal has broken loose, the axle housing must be cleaned to remove particles that will cause damage. At this time, any other damaged parts in the axle housing must also be replaced.

Knock

Knock, which can occur on all driving phases, has several causes including damaged teeth or gearset.

Unlicensed Product

DIAGNOSIS AND TESTING (Continued)

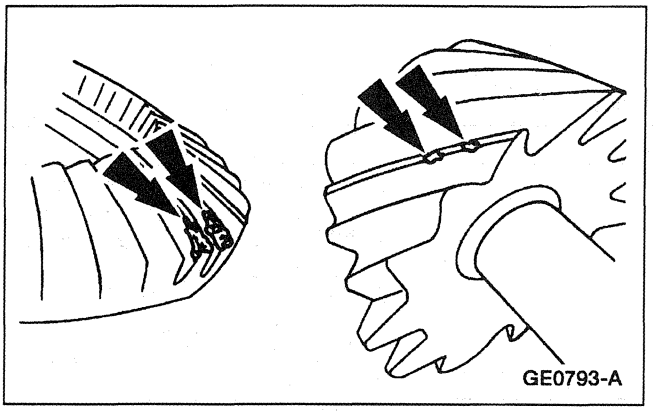

A gear tooth damaged on the drive side is a common cause of the knock. This can usually be corrected by grinding the damaged area.

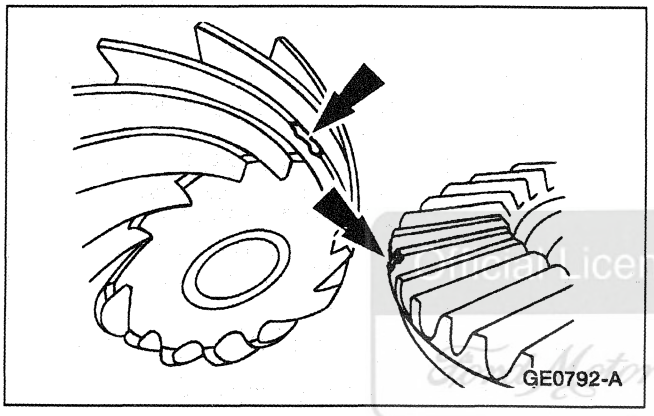

Clunk

Clunk is a metallic noise heard when the automatic transmission is engaged in REVERSE or DRIVE. The noise may also occur when throttle is applied or released. It is caused by backlash somewhere in the driveline or loose suspension components; it is felt or heard in the axle.

Bearing Rumble

Bearing rumble sounds like marbles being tumbled. This condition is usually caused by a worn/damaged wheel bearing. The lower pitch is because the wheel bearing turns at only about one-third of the driveshaft speed. Wheel bearing noise also may be high-pitched, similar to gear noise, but will be evident in all four driving modes.

Ford Licensed Product
Ford Motor Company

DIAGNOSIS AND TESTING (Continued)

Symptom Chart

Symptom Chart

Condition	Possible Source	Action
• Excessive Rear Axle Noise	• Rear axle.	• PERFORM the NVH tests to determine whether the noise is an NVH concern caused by a condition in the rear axle. REFER to Section 100-04.
	• Wheel bearing.	• CHECK and, as necessary, REPLACE the wheel bearings. REFER to Section 204-02.
• Loud Clunk in the Driveline When Shifting from Reverse to Forward	• High idle speed.	• REFER to the Powertrain Control/Emissions Diagnosis Manual [1].
	• Engine mounts.	• INSPECT and REPAIR as necessary.
	• Driveshaft components.	• REFER to Universal Joint (U-joint) Inspection under Inspection and Verification in this section. REPAIR as necessary.
	• Rear axle differential.	• REMOVE, INSPECT and REPAIR as necessary.
	• Suspension components.	• INSPECT, REPAIR, or REPLACE as necessary.
	• Backlash in the axle or the transmission .	• REPAIR or REPLACE as necessary.
	• Lubrication.	• ADD lubricant as necessary.
• Clicking, Popping, or Grinding Noises	• Inadequate or contaminated lubrication in the constant velocity (CV) joint.	• INSPECT, CLEAN and LUBRICATE as necessary.
	• Another component contacting the halfshaft.	• INSPECT and REPAIR as necessary.
	• Wheel bearings.	• REFER to Section 204-01 or Section 204-02.
	• Brake components.	• REFER to Section 206-00.
	• Suspension components.	• REFER to Section 204-00.
	• Steering components.	• REFER to Section 211-00.
• Vibration at Highway Speeds	• Out-of-balance wheels or tires.	• BALANCE wheels and tires or REPLACE as necessary.
	• Out-of-round tires.	• REFER to Section 204-04.

Official Licensed Product

1 Can be purchased as a separate item.

DIAGNOSIS AND TESTING (Continued)

Symptom Chart (Continued)

Condition	Possible Source	Action
• Shudder, Vibration During Acceleration	• High constant velocity (CV) joint operating angles caused by improper ride height.	• CHECK the ride height and VERIFY the proper spring rate. REPAIR as necessary.
	• Constant velocity (CV) joint.	• INSPECT and REPLACE as necessary.
	• Axle assembly mispositioned.	• CHECK the axle mounts for damage and wear. REPAIR as necessary.
	• Front suspension components.	• CHECK for worn suspension bushings and damaged components. REPAIR as necessary.
	• Binding, damaged, or galled splines on driveshaft slip-yoke.	• CHECK the transmission for proper lubricant. CLEAN and lap the splines. LUBRICATE the splines with Premium Long-Life Grease XG-1-C or equivalent meeting Ford specification ESA-M1C75-B.
	• U-joints binding or seized.	• REFER to Section 205-01.
• Driveline Vibration	• U-joint.	• INSPECT and REPLACE the universal joints as necessary. Refer to Section 205-01.
	• Rear axle companion flange runout.	• REFER to Driveline Vibration in this section.
	• Driveshaft out of balance.	• REFER to Driveline Vibration in this section.
	• Driveshaft runout.	• REFER to Driveline Vibration in this section.
	• Lateral and radial tire and wheel runout.	• REFER to Section 204-04.
	• Driveline angles out of specification.	• CORRECT as required.
	• Splines on driveshaft slip yoke	• CHECK the transmission for proper lubricant. CLEAN and lap the splines. LUBRICATE the splines with Premium Long-Life Grease XG-1-C or equivalent meeting Ford specification ESA-M1C75-B.
	• Loose companion flange bolts.	• TIGHTEN to specifications. REFER to Section 205-01.
• Noise Is the Same on Drive or Coast	• Road.	• Normal condition.
	• Tire(s).	• BALANCE or REPLACE the tire(s). REFER to Section 204-04.
	• Wheel bearing.	• CHECK and, as necessary, REPLACE the wheel bearings; REFER to Section 204-01 or Section 204-02.
	• Improper driveline angles.	• CORRECT as required.
• Lubricant Leaking from the Pinion Seal or Stub Shaft Pilot Bearing Housing Seals	• Vent.	• CLEAN the axle housing vent.
	• Damage in the seal contact area or dust slinger on the companion flange dust shield.	• REPLACE the companion flange and the pinion seal if damage is found.

Off... Licensed Product
Ford Motor Company

DIAGNOSIS AND TESTING (Continued)

Symptom Chart (Continued)

Condition	Possible Source	Action
• Noise Tone Lowers as the Vehicle Speed Is Lowered	• Tire(s).	• BALANCE or REPLACE the tire(s). REFER to Section 204-04.
• Similar Noise Is Produced with the Vehicle Standing and Driving	• Engine .	• REFER to Section 303-01.
	• Transmission.	• REFER to Section 307-01.
• Noise Most Pronounced While Turning	• Differential side gears and pinion gears.	• REPLACE the gears.
• Drive Noise, Coast Noise or Float Noise	• Wheel bearings.	• CHECK and, as necessary, REPLACE the wheel bearings; REFER to Section 204-01 or Section 204-02.
	• Differential side bearings.	• INSPECT and, as necessary, REPLACE the differential side bearings; REFER to Section 205-02.
	• Ring gear and pinion.	• INSPECT and, as necessary, ADJUST or REPLACE the ring and pinion; REFER to Section 205-02.

Official Licensed Product
Ford Motor Company

DIAGNOSIS AND TESTING (Continued)

Component Tests

Driveline Vibration

⚠ WARNING: THE ELECTRICAL POWER TO THE AIR SUSPENSION SYSTEM MUST BE SHUT OFF PRIOR TO HOISTING, JACKING OR TOWING AN AIR SUSPENSION VEHICLE. THIS CAN BE ACCOMPLISHED BY TURNING OFF THE AIR SUSPENSION SWITCH. FAILURE TO DO SO CAN RESULT IN UNEXPECTED INFLATION OR DEFLATION OF THE AIR SPRINGS, WHICH CAN RESULT IN SHIFTING OF THE VEHICLE DURING THESE OPERATIONS.

Driveline vibration exhibits a higher frequency and lower amplitude than does high-speed shake. Driveline vibration is directly related to the speed of the vehicle and is usually noticed at various speed ranges. Driveline vibration can be perceived as a tremor in the floorpan or is heard as a rumble, hum, or boom. Driveline vibration can exist in all drive modes, but may exhibit different symptoms depending upon whether the vehicle is accelerating, decelerating, floating, or coasting. Check the driveline angles if the vibration is particularly noticeable during acceleration or deceleration, especially at lower speeds. Driveline vibration can be duplicated on a hoist. When performing an on hoist test, the suspension lower arms must be supported with jack stands to make sure the halfshafts maintain the proper ride height. The brakes may need to be applied lightly in order to simulate road resistance.

1. **⚠ CAUTION: The suspension must not be allowed to hang free. When the constant velocity joint is run at a very high angle, extra vibrations as well as damage to seals and joints will occur.**

   NOTE: Raise the vehicle promptly after road testing to prevent tire flat-spotting.

   Raise and support the vehicle; refer to Section 100-02. Engage the drivetrain and accelerate to the observed road test speed to verify the presence of the vibration. If the vibration is not evident, check the non-driving wheels with a wheel balancer to rule out imbalance as a possible cause. If required, balance the non-driving wheels and repeat the road test. If the vibration is still evident, proceed to Step 2.

2. Mark the relative position of the drive wheels to the wheel lugs. Remove the wheels. Install all the lug nuts in the reversed position and repeat the road speed acceleration. If the vibration is gone, refer to the tire and wheel runout procedure in Section 204-04. If the vibration persists, proceed to Step 3.
3. Inspect the driveshaft for signs of physical damage, missing balance weight, undercoating, improper seating, wear and binding universal joints . Clean the driveshaft and replace the universal joints or replace the driveshaft if damaged. Check the index marks (paint spots) on the driveshaft and axle companion flange. If these marks are more than one-quarter turn apart, disconnect the driveshaft and re-index to align the marks as closely as possible. After any corrections are made, recheck for vibration at the road test speed. If the vibration is gone, reinstall the wheels and road test. If the vibration persists, proceed to Step 4.
4. Raise the vehicle on a hoist and remove the wheels. Rotate the driveshaft by turning the axle and measure the runout at the front, the center, and the rear of the driveshaft with the indicator. If the runout exceeds 0.89 mm (0.035 inch) at the front or center, the driveshaft must be replaced. If the front and center are within this limit, but the rear runout is not, mark the rear runout high point and proceed to Step 5. If the runout is within the limits at all points, proceed to Step 7.

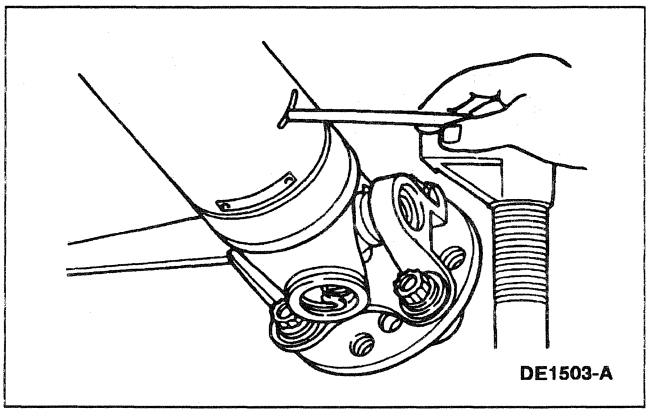
DE1503-A

Licensed Product Ford Motor Company

DIAGNOSIS AND TESTING (Continued)

5. **NOTE:** Check the U-joints during re-indexing. If a U-joint feels stiff or gritty, replace the U-joints.

   Scribe alignment marks on the driveshaft and the axle companion flange. Disconnect the driveshaft , rotate it one-half turn, and reconnect it. Circular axle companion flanges can be turned in one-quarter increments to fine tune the runout condition; half-round axle companion flanges are limited to two positions. Check the runout at the rear of the driveshaft . If it is still over 0.89 mm (0.035 inch), mark the high point and proceed to Step 6. If the runout is no longer excessive, check for vibration at the road test speed. If vibration is still present, check the alignment of the transmission output shaft and driveshaft slip-yoke index marks. If the index marks are in alignment, proceed to Step 7. If the index marks are out of alignment, reinstall the driveshaft with the marks aligned, and road test the vehicle. If the vibration persists, proceed to Step 7.

6. Excessive driveshaft runout may originate in the driveshaft itself or in the axle companion flange. To determine which, compare the two high points marked in Steps 4 and 5. If the marks are close together, within about 25 mm (1 inch), the shaft must be replaced and the vehicle road tested.

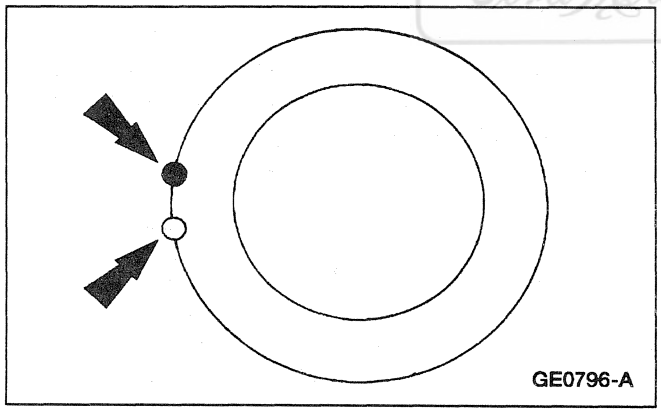

If the marks are on opposite sides of the driveshaft , the yoke or axle companion flange is responsible for the vibration.

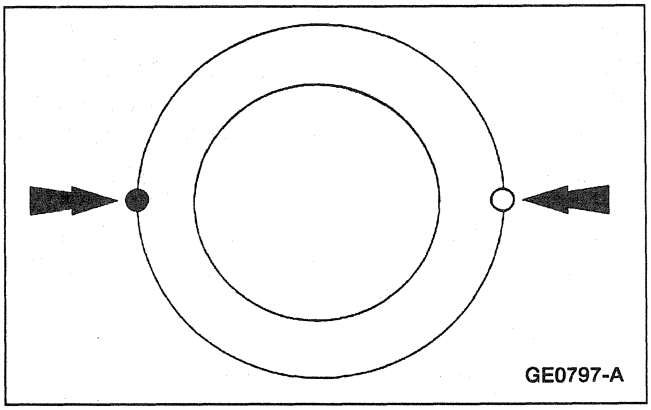

When replacing an axle companion flange, the driveshaft runout must not exceed 0.89 mm (0.035 inch). When runout is within limits, recheck for vibration at road speed. If vibration persists, balance the driveshaft .

7. **WARNING: BE SURE TO POSITION THE HOSE CLAMP(S) SO THAT IT WILL NOT CONTACT ANY SURROUNDING COMPONENT WHEN TURNING CLOCKWISE OR COUNTERCLOCKWISE. ALSO, YOU MUST REMOVE ANY HOSE CLAMP BANDING THAT PROTRUDES FROM THE END OF THE SCREW THREADS AFTER THE CLAMP IS TIGHT.**

   To balance the driveshaft , install one or two hose clamps on the driveshaft , near the rear. Position of the hose clamp head(s) can be determined by trial-and-error.

8. Mark the rear of the driveshaft into four approximately equal sectors and number the marks 1 through 4. Install a hose clamp on the driveshaft with its head at position No. 1.

Ford Motor Company Licensed

DIAGNOSIS AND TESTING (Continued)

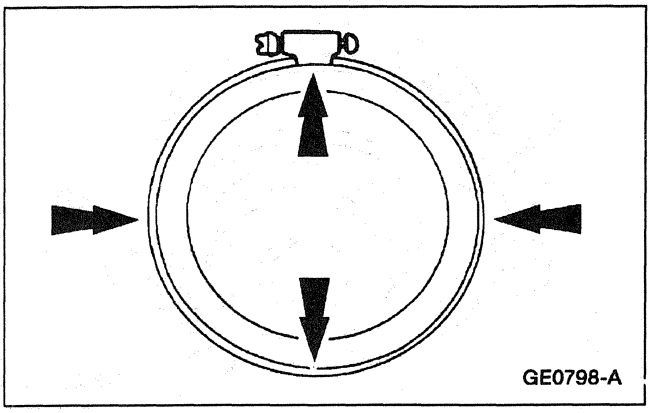

Check for vibration at road speed. Recheck with the clamp at each of the other positions to find the position that shows minimum vibration. If two adjacent positions show equal improvement, position the clamp head between them.

9. If the vibration persists, add a second clamp at the same position and recheck for vibration.

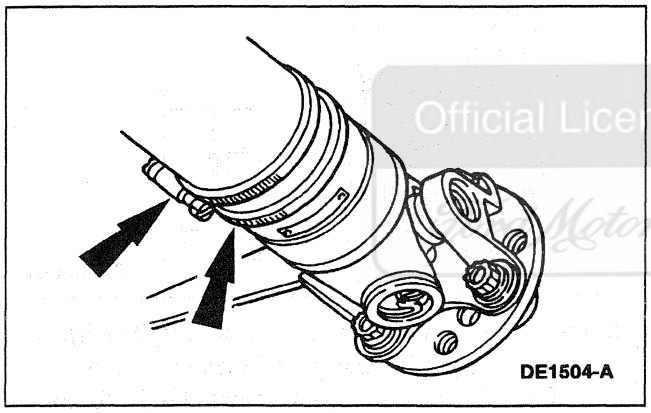

If no improvement is noted, rotate the clamps in opposite directions, equal distances from the best position determined in Step 8. Separate the clamp heads about 13 mm (1/2 inch) and recheck for vibration at the road speed.

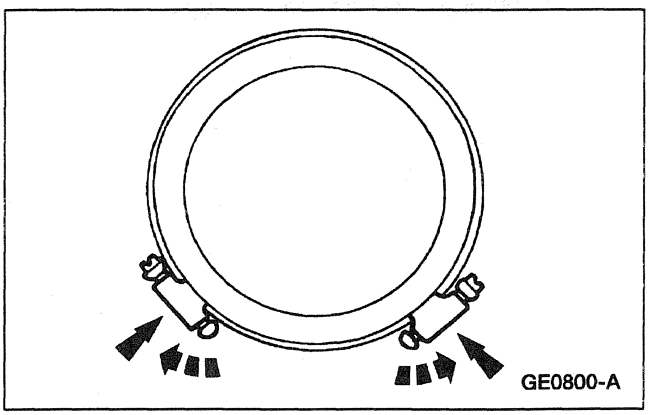

Repeat the process with increasing separation until the best combination is found or the vibration is reduced to an acceptable level.

10. Install the wheels and road test (vibration noticeable on the hoist may not be evident during the road test). If the vibration is still not acceptable, replace the axle drive line vibration damper first, if so equipped. If the vibration is still not acceptable, refer to Section 205-02 for differential case and ring gear runout checks.

Driveshaft Vibrates

1. Road test the vehicle to determine the critical vibration points. Note the road speed, the engine rpm, and the shift lever positions at which the vibration occurs.
2. Stop the vehicle, put the transmission lever in NEUTRAL and run the engine through the critical speed ranges determined in Step 1.
3. If no vibration is felt, balance the driveshaft . Refer to Driveline Vibration in this section.

Companion Flange Runout Check — Circular

⚠ WARNING: THE ELECTRICAL POWER TO THE AIR SUSPENSION SYSTEM MUST BE SHUT OFF PRIOR TO HOISTING, JACKING OR TOWING AN AIR SUSPENSION VEHICLE. THIS CAN BE ACCOMPLISHED BY TURNING OFF THE AIR SUSPENSION SWITCH. FAILURE TO DO SO CAN RESULT IN UNEXPECTED INFLATION OR DEFLATION OF THE AIR SPRINGS, WHICH CAN RESULT IN SHIFTING OF THE VEHICLE DURING THESE OPERATIONS.

⚠ CAUTION: Pinion bearing preload must be reset if the pinion nut has been loosened or removed for companion flange reindexing or replacement.

1. Raise and support the vehicle; refer to Section 100-02.
2. Remove the driveshaft ; refer to Section 205-01.
3. Check the companion flange for damage.
4. Position the Companion Flange Runout Gauge on the companion flange.

Official Licensed Product

DIAGNOSIS AND TESTING (Continued)

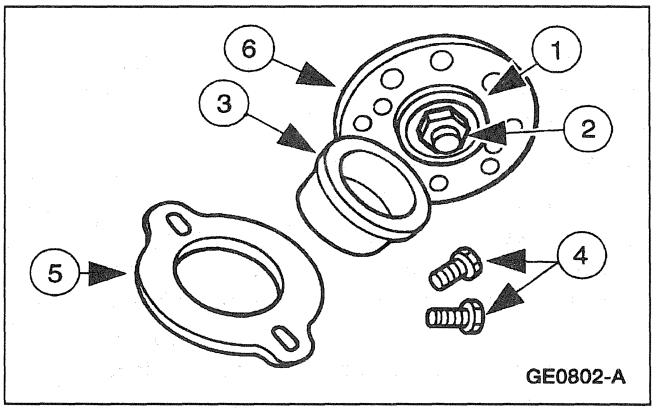

Item	Part Number	Description
1	—	Pilot (Part of 205-319 (T92L-4851-B))
2	354845	Pinion Nut
3	205-319 (T92L-4851-B)	Companion Flange Runout Gauge
4	—	Bolts (2 Req'd) (Part of 205-320 (T92L-4851-C))
5	205-320 (T92L-4851-C)	Clamp Plate
6	4851	Companion Flange

5. Position the Clamp Plate onto the Companion Flange Runout Gauge.

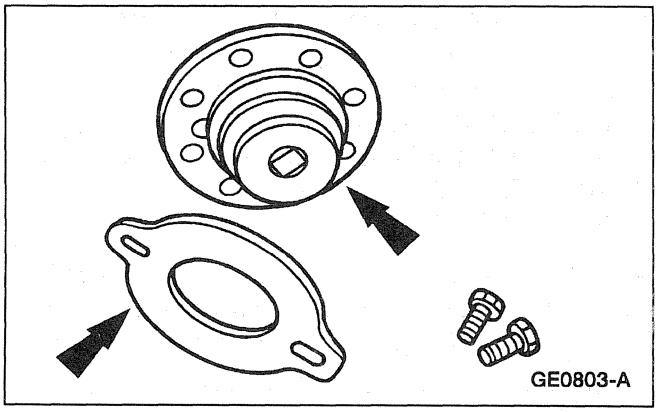

6. Align the holes on the clamp plate with the holes in the companion flange and install the bolts. Snug the bolts evenly.

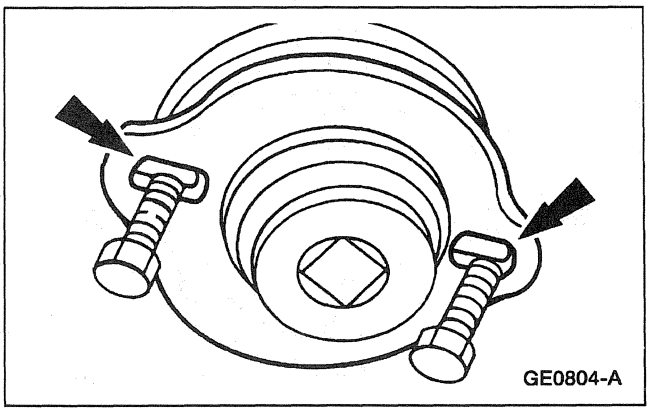

7. Position the Dial Indicator/Magnetic Base as shown. Turn the Companion Flange Runout Gauge, and locate and mark the high spot on the companion flange with yellow paint.

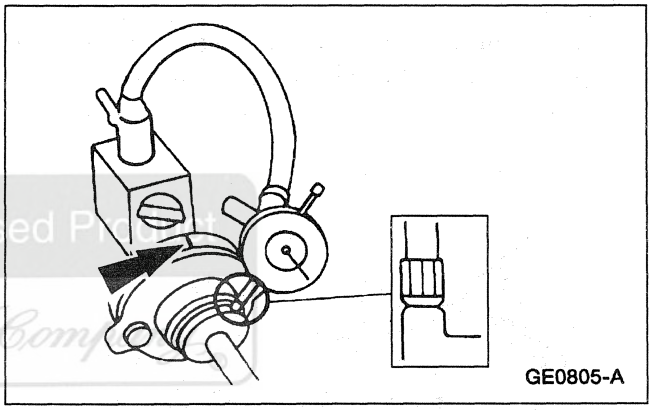

If the flange runout exceeds 0.25 mm (0.010 inch), remove the companion flange, reindex the flange one-half turn on the pinion, and reinstall it. Refer to Section 205-02 for the flange removal and installation procedures.

8. Check the runout again. If necessary, rotate the flange until an acceptable runout is obtained. If the flange runout is still more than 0.25 mm (0.010 inch), replace the companion flange.

Official Licensed Product Ford Motor Company

DIAGNOSIS AND TESTING (Continued)

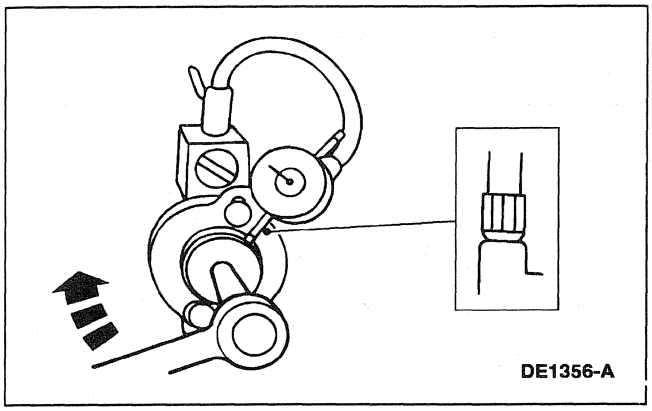

9. If excessive runout is still evident after replacement of the companion flange, replace the ring and pinion. Repeat the above checks until the runout is within specifications.
10. Install the driveshaft ; refer to Section 205-01.

Tooth Contact Pattern Check — Gearset

1. To check the gear tooth contact, paint the gear teeth with the special marking compound. A mixture that is too wet will run and smear; a mixture that is too dry cannot be pressed out from between the teeth.
2. Use a box wrench on the ring gear bolts as a lever to rotate the ring gear several complete revolutions in both directions or until a clear tooth contact pattern is obtained.
3. Certain types of gear tooth contact patterns on the ring gear indicate incorrect adjustment. Incorrect adjustment can be corrected by readjusting the ring gear or the pinion.

Contact Pattern Location

In general, desirable ring gear tooth patterns must have the following characteristics:

- Drive pattern on the drive side ring gear well centered on the tooth.
- Coast pattern on the coast side ring gear well centered on the tooth.
- Clearance between the pattern and the top of the tooth.
- No hard lines where the pressure is high.

Acceptable ring gear tooth patterns for all axles.

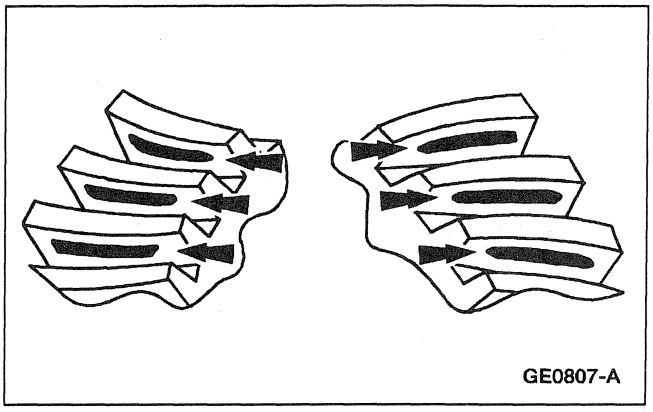

Correct backlash with a thinner pinion position shim required.

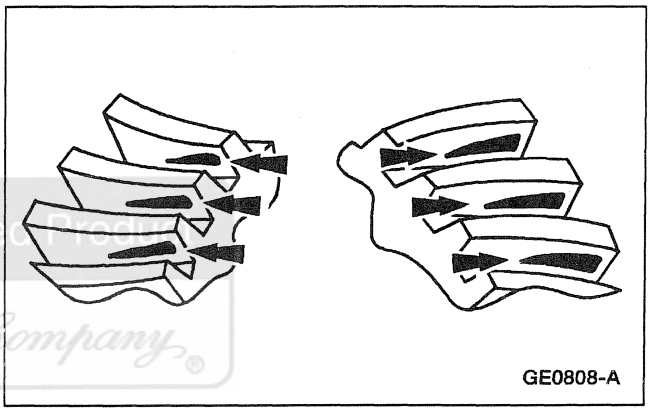

Correct backlash with a thicker pinion position shim required.

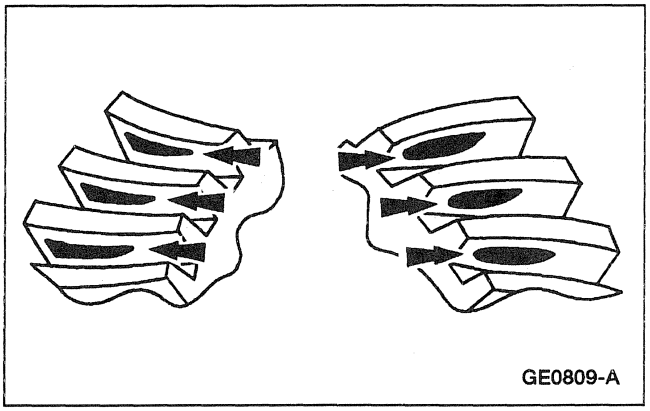

Official Licensed Product Ford Motor Company

DIAGNOSIS AND TESTING (Continued)

Correct pinion position shim that requires a decrease in backlash.

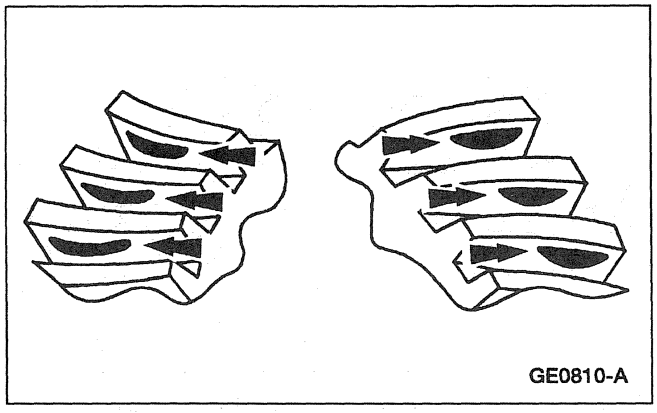

Correct pinion position shim that requires an increase in backlash.

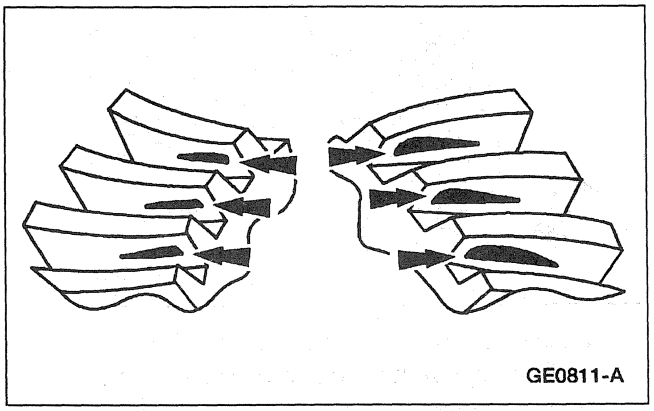

GENERAL PROCEDURES

Casting Porosity (Holes in Casting) Repair

Official Licensed Product
Ford Motor Company

⚠ **CAUTION: To keep the axle's sound characteristics, do not disassemble the carrier.**

NOTE: Casting porosity is a condition where occasionally gas bubbles will form during the casting process leaving small pockets in the metal that will cause the axle housing to leak.

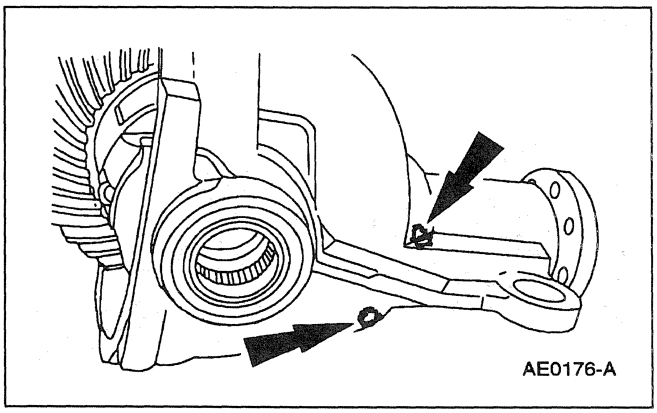

1. To fill small pockets, peen in a small amount of body lead.

2. Seal the pocket.
   - Use epoxy sealer meeting Ford specification M-3D35A(E).

GENERAL PROCEDURES (Continued)

3. To fill large pockets, drill and tap a shallow hole for a small setscrew. Install the setscrew and seal it.
   - Use epoxy sealer meeting Ford specification M-3D35A(E).

SPECIFICATIONS

General Specifications

Item	Specification
Lubricants	
Rear Axle	
Thermally Stable XY-80W90-QL	WSP-M2C197-A
Driveshaft Slip-Yoke	
Premium Long-Life Grease XG-1-C	ESA-M1C75-B
Capacities	
Rear Axle Liters (Pints)	1.4 (3.0)

(Continued)

General Specifications

Item	Specification
Sealant	
Pipe Sealant with Teflon® D8AZ-19554-A	WSK-M2G350-A2
Epoxy Sealer	M-3D35A (E)
Stud and Bearing Mount EOAZ-19554-BA	WSK-M2G349-A1

Official Licensed Product
Ford Motor Company

SECTION 205-01 Driveshaft

VEHICLE APPLICATION: Mark VIII

SUBJECT	PAGE
DESCRIPTION AND OPERATION	
Driveshafts	205-01-2
Universal Joints	205-01-2
DIAGNOSIS AND TESTING	
Driveshaft	205-01-2
REMOVAL AND INSTALLATION	
Driveshaft	205-01-3
DISASSEMBLY AND ASSEMBLY	
Universal Joint — Single Cardan, Flange Yoke	205-01-8
Universal Joint — Single Cardan, Slip Yoke	205-01-5
SPECIFICATIONS	205-01-11

Official Licensed Product
Ford Motor Company

DESCRIPTION AND OPERATION

Driveshafts

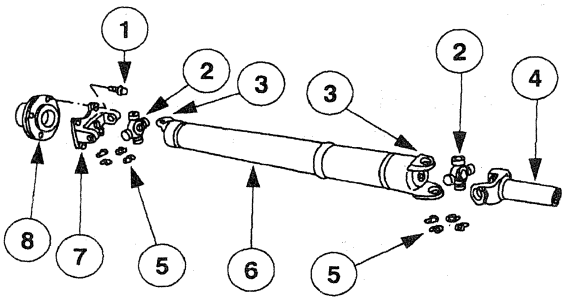

AE0073-A

Item	Part Number	Description
1	N800574-S100	Bolt
2	4635	Universal Joint
3	—	End Yoke (Part of 4602)
4	4841	Driveshaft Slip Yoke
5	—	Snap Ring (Part of 4635)
6	4602	Driveshaft
7	4782	Driveshaft Centering Socket Yoke
8	4851	Rear Axle Universal Joint Flange

NOTE: All driveshaft (4602) assemblies are balanced. If undercoating the vehicle, protect the driveshaft and rear axle shaft universal joints (4249) to prevent overspray of any undercoating material.

The driveshaft has the following features:

- A tubular shaft used to transfer engine torque from the transmission output shaft to the differential in the rear axle housing, which transmits torque through the halfshafts to the drive wheels.
- Consists of two single-cardan universal joints (4635), a driveshaft slip yoke (4841), a welded aluminum tube assembly and a driveshaft centering socket yoke (4782).
- The splined driveshaft slip yoke permits the driveshaft to move forward and rearward on the transmission output shaft during drivetrain movement and during driveshaft removal and installation.

Universal Joints

The universal joints are:

- lubed-for-life design.
- equipped with nylon thrust washers, located at each base of the bearing cup, which control end play, position the needle bearing and improve grease movement.

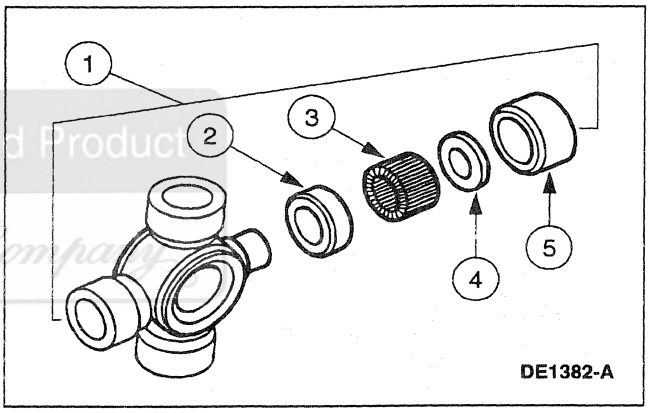

DE1382-A

Item	Part Number	Description
1	4635	Universal Joint
2	—	Grease Seal (Part of 4635)
3	—	Needle Rollers (Part of 4635)
4	—	Thrust Washer (Part of 4635)
5	—	Bearing Cup (Part of 4635)

DIAGNOSIS AND TESTING

Driveshaft

Refer to Section 205-00.

REMOVAL AND INSTALLATION

Driveshaft

Removal

1. Lower the fuel tank approximately 15 cm (6 inches); refer to the fuel tank procedure in Section 310-01.

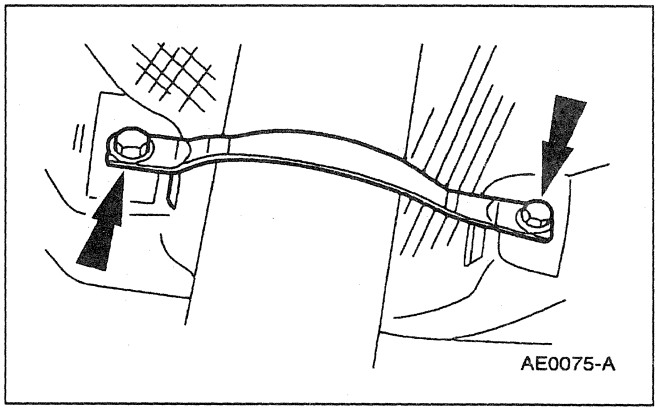

2. Remove the retaining bolts and the sub-frame center support member (5K065).

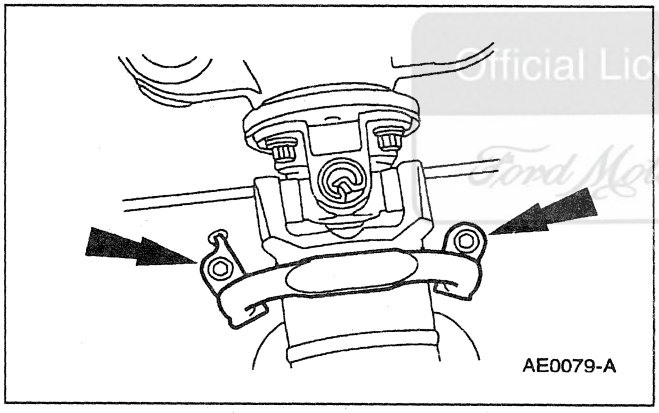

3. Remove the retaining bolts and the sub-frame crossmember (5K068).

Official Licensed Reproduction
Ford Motor Company

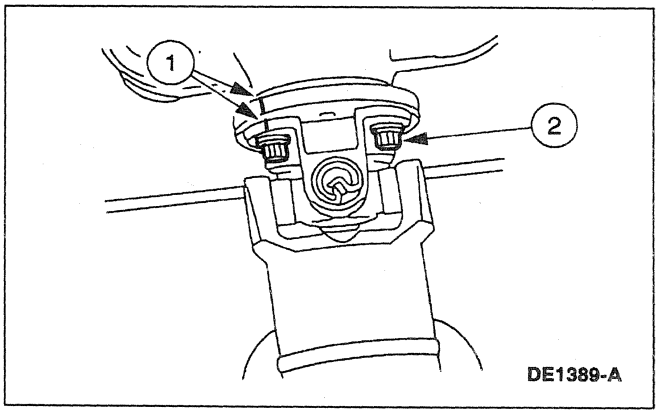

4. Separate the driveshaft centering socket yoke (4782) from the rear axle universal joint flange (4851).
   1 Place an index mark on the rear axle universal joint flange and the driveshaft centering socket yoke.
   2 Remove the four bolts.

REMOVAL AND INSTALLATION (Continued)

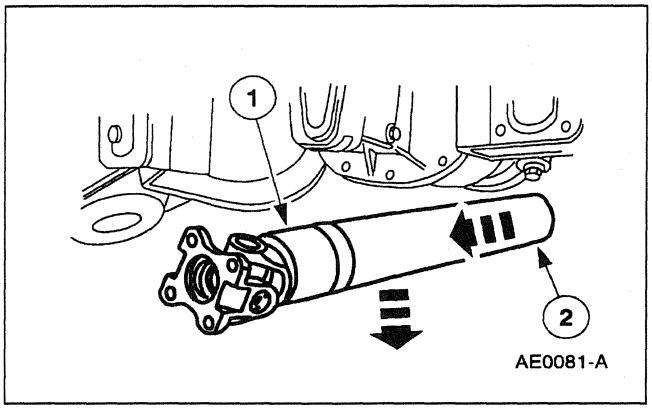

5. Remove the driveshaft (4602).
   1 Lower the rear end of the driveshaft to clear the rear axle housing.
   2 Pull the driveshaft rearward until the driveshaft slip yoke (4841) clears the transmission extension housing.
   - Place a paint index mark on the driveshaft slip yoke and the transmission output shaft.

6. Remove the driveshaft from the vehicle.

Installation

1. Follow the removal procedure in reverse order.

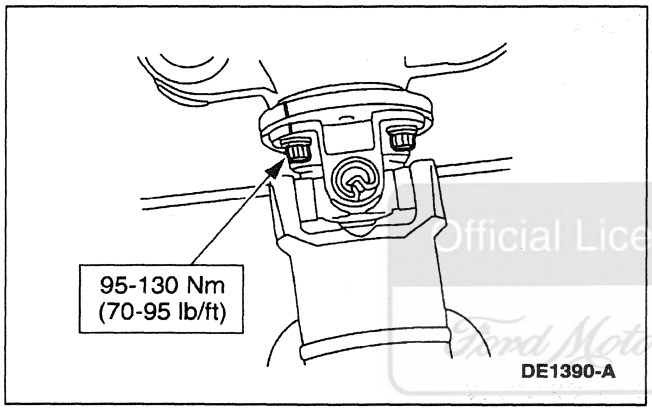

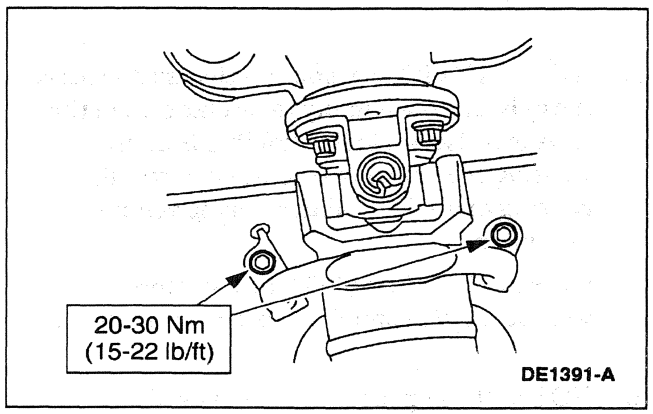

Official Licensed Product
Ford Motor Company

REMOVAL AND INSTALLATION (Continued)

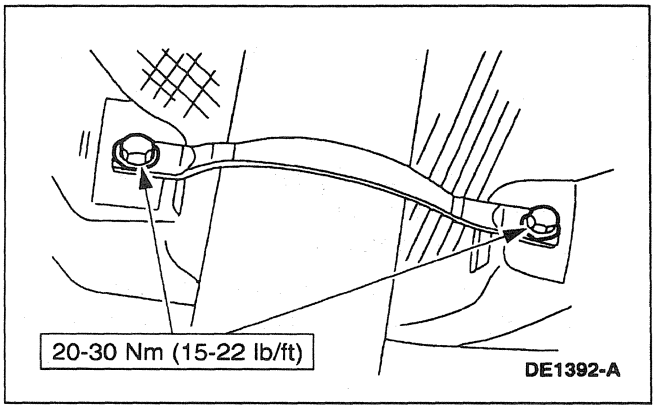

DISASSEMBLY AND ASSEMBLY

Universal Joint — Single Cardan, Slip Yoke

Special Tool(s)

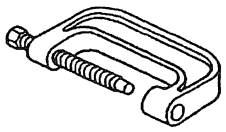 ST1172-A	U-Joint Tool 205-086 (T74P-4635-C)

Official Licensed Product
Ford Motor Company

Disassembly

1. ⚠ **CAUTION: Under no circumstances is the driveshaft assembly to be clamped in the jaws of a vise or similar holding fixture. Denting or localizing fracture can result, causing driveshaft failure during vehicle operation.**

   Place the driveshaft (4602) on a suitable workbench. Be careful not to damage the tube.

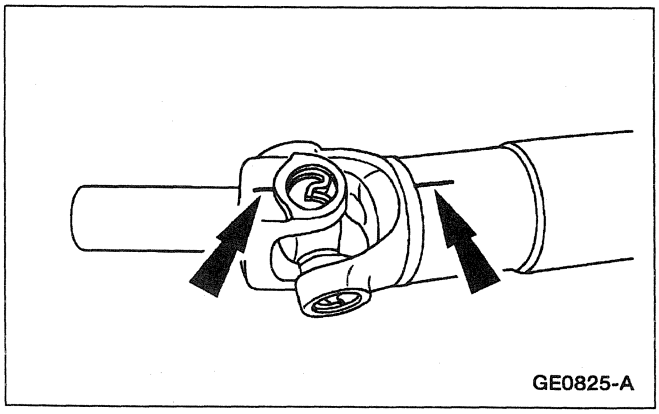

2. **NOTE:** If components are not marked and therefore installed incorrectly, driveline imbalance can occur.

   Index-mark the driveshaft components.

DISASSEMBLY AND ASSEMBLY (Continued)

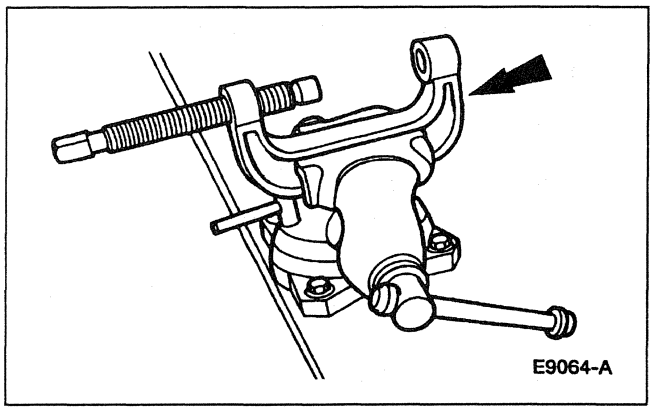

3. Clamp U-Joint Tool in a vise.

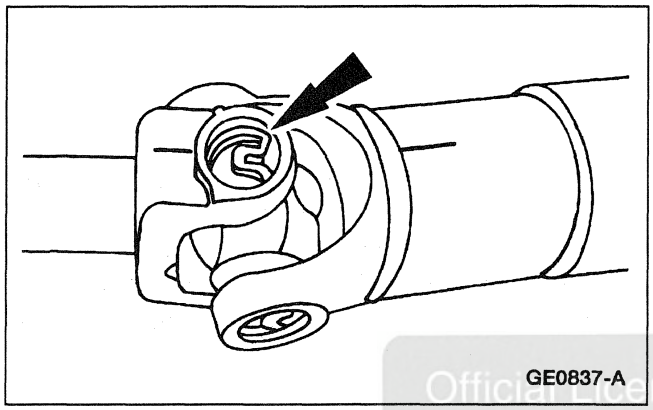

4. Remove the snap rings.

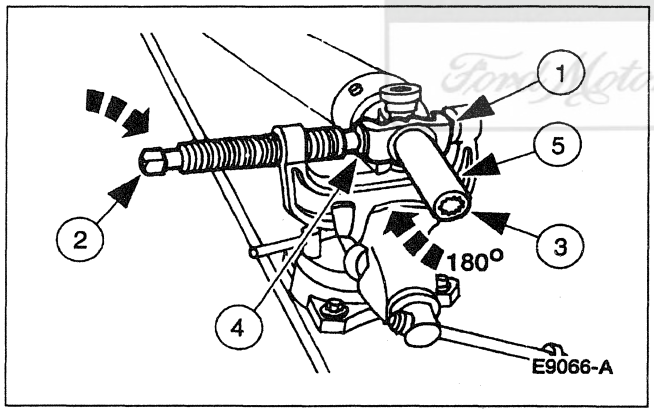

5. **NOTE:** If necessary, use a pair of pliers to remove a bearing cup if it cannot be pressed out all the way.

   Remove the driveshaft slip yoke (4841).

   1 Position the driveshaft slip yoke in the U-Joint Tool.
   2 Press out a bearing cup.
   3 Rotate the driveshaft slip yoke.
   4 Press on the spider to remove the remaining bearing cup.
   5 Remove the driveshaft slip yoke.

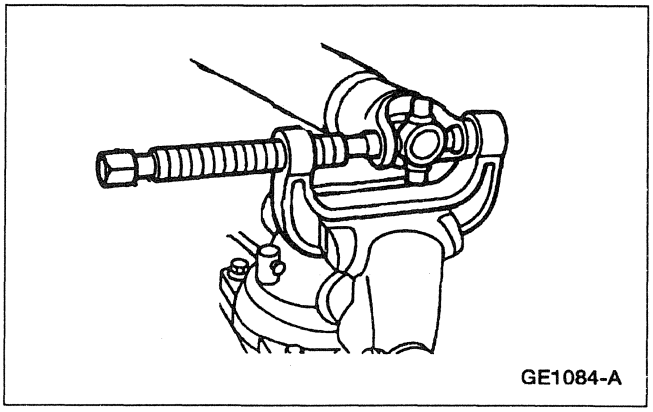

6. Repeat Step 5 to remove the remaining bearing cups and spider from the driveshaft.

Official Licensed Product
Ford Motor Company

DISASSEMBLY AND ASSEMBLY (Continued)

7. Clean the yoke area at each end of the driveshaft.

Assembly

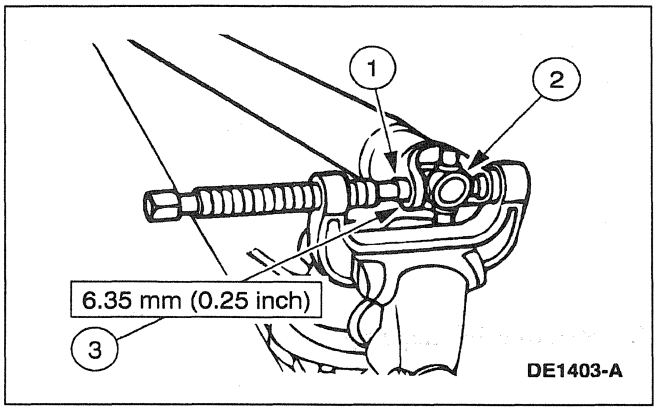

1. Install the bearing cup.
   1 Start a new bearing cup into the driveshaft yoke.
   2 Position the new spider in the driveshaft yoke.
   3 Using the U-Joint Tool, press the bearing cup below the yoke surface.

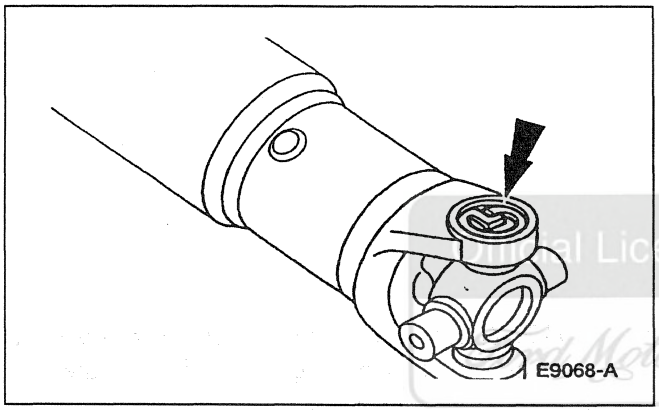

2. **NOTE:** Use the yellow snap rings supplied in the kit to assemble the rear axle shaft universal joint (4249) (U-joint). If difficulty is encountered with the yellow snap rings, install the black snap rings.
   Remove the driveshaft from the U-Joint Tool, and install the snap ring.

Ford Motor Company Licensed Product

3. Repeat Steps 1 and 2 to install the remaining new bearing cups, spider, and driveshaft yoke.

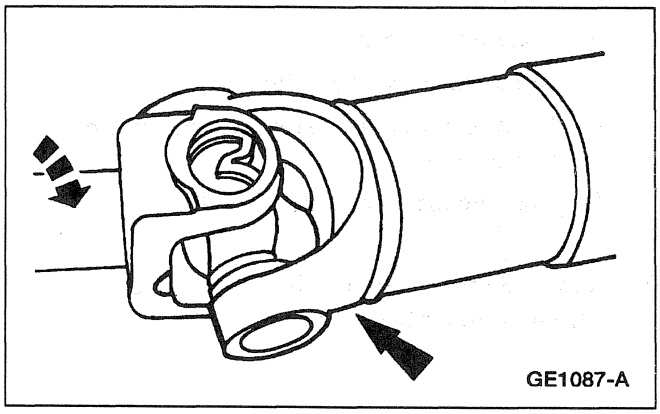

4. **NOTE:** Do not strike the bearings.
   Check the U-joints for freedom of movement.
   - If binding, strike the yoke with a brass or plastic hammer.

5. Install the driveshaft.

DISASSEMBLY AND ASSEMBLY (Continued)

Universal Joint — Single Cardan, Flange Yoke

Special Tool(s)

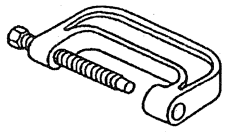 ST1172-A	U-Joint Tool 205-086 (T74P-4635-C)

Disassembly

1. Remove the driveshaft (4602).

2. **CAUTION: Do not clamp the driveshaft in a vise or similar holding fixture.**

   Place the driveshaft on a suitable workbench, being careful not to damage the tube.

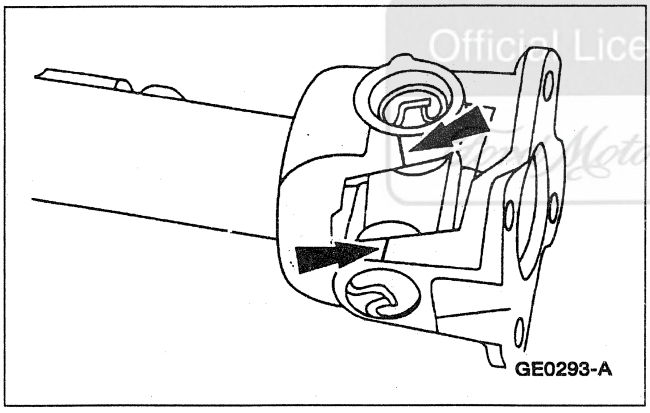
GE0293-A

3. **NOTE:** If components are not marked and installed correctly, driveline imbalance can occur.

   Mark the positions of the driveshaft components.

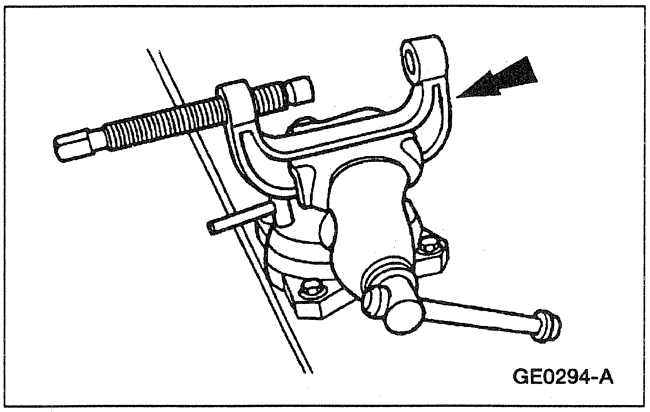
GE0294-A

4. Clamp the U-Joint Tool in a vise.

Official Licensed Product Ford Motor Company

DISASSEMBLY AND ASSEMBLY (Continued)

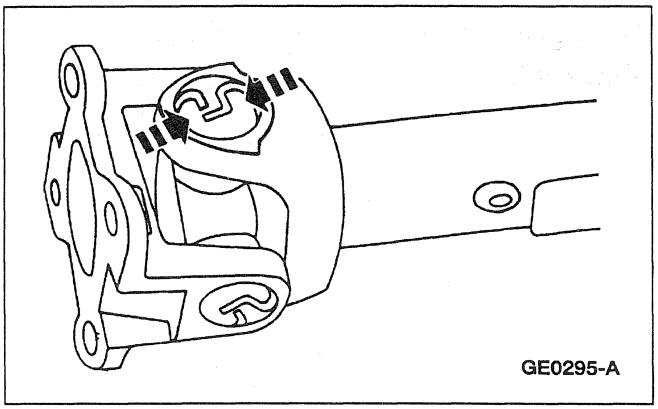

5. Remove all four of the snap rings.

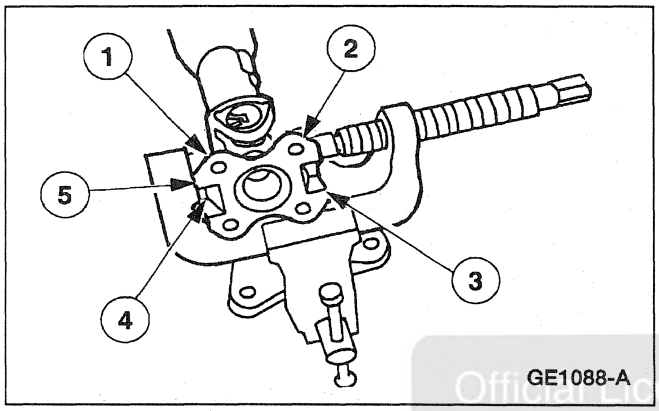

6. Remove the driveshaft flange yoke.
   1 Position the driveshaft flange yoke in the U-Joint Tool.
   2 Press out a bearing cup.
   3 Remove the driveshaft flange yoke.
   4 Press on the spider to remove the remaining bearing cup.
   5 Remove the driveshaft flange yoke.

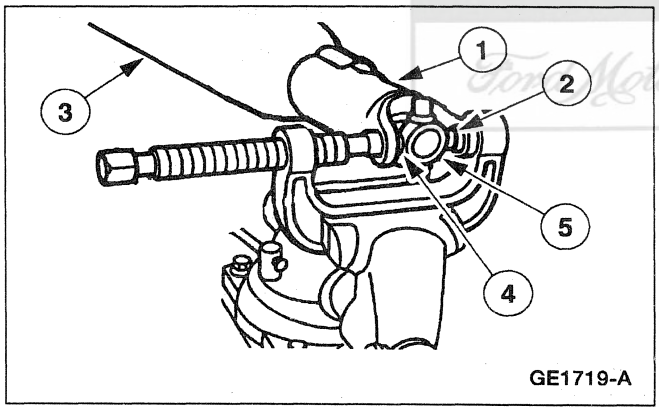

7. Remove the spider.
   1 Reposition the driveshaft in the U-Joint Tool.
   2 Press out the bearing cup.
   3 Rotate the driveshaft.
   4 Press on the spider to remove the remaining bearing cup.
   5 Remove the spider.

8. Clean the yoke area at the end of the driveshaft.

Official Licensed Product
Ford Motor Company

DISASSEMBLY AND ASSEMBLY (Continued)

Assembly

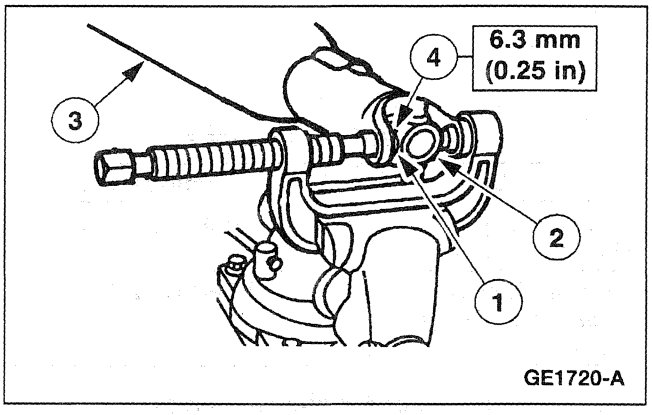

1. Install the spider.
   1 Start a new bearing cup into the driveshaft yoke.
   2 Position the new spider in the driveshaft yoke.
   3 Position the driveshaft in the U-Joint Tool.
   4 Press the bearing cup below the yoke surface.
   - Repeat for the other bearing cup.

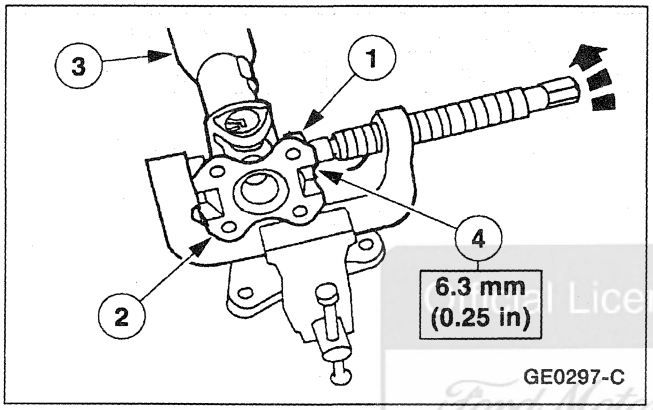

2. Install the driveshaft flange yoke.
   1 Start a new bearing cup into the driveshaft flange yoke.
   2 Position the driveshaft flange yoke.
   3 Position the driveshaft in the U-Joint Tool.
   4 Press the bearing cup below the yoke surface.
   - Repeat for the other bearing cup.

Ford Motor Company Licensed Product

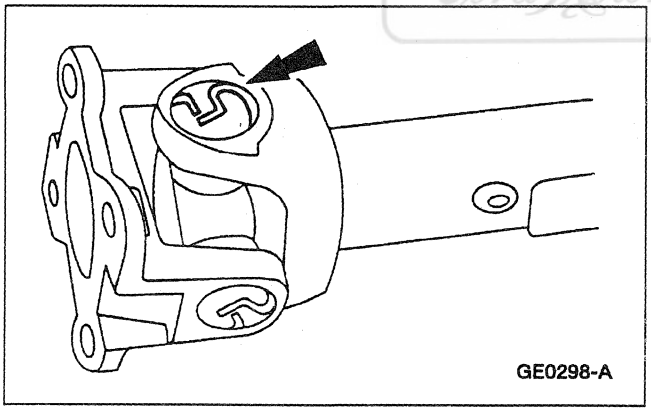

3. **NOTE:** Use the yellow snap rings supplied in the kit to assemble the universal joint (U-joint). If difficulty is encountered with the yellow snap rings, install the black snap rings.

   Remove the driveshaft from the U-Joint Tool, and install the four snap rings.

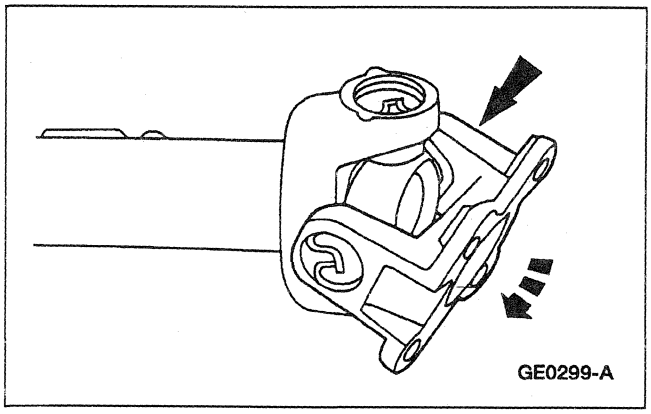

4. **NOTE:** Do not strike the bearings.

   Check the U-joints for freedom of movement.
   - If binding, strike the yoke with a brass or plastic hammer.

DISASSEMBLY AND ASSEMBLY (Continued)

5. Install the driveshaft.

SPECIFICATIONS

Lubricant Specifications

CV Joint Location	Specification	Grams	Ounces
Outboard	ESP-M1C207-A, Ford Part No. E43Z-19590-A	225	7.9
Inboard	ESP-M1C207-A, Ford Part No. E43Z-19590-A	250	8.8

Torque Specifications

Description	Nm	Lb-Ft
Rear Axle Wheel Hub Retainer	340	251
Rear Suspension Arm-to-Rear Wheel Knuckle Bolt (Lower)	128-178	95-131
Rear Suspension Arm-to-Rear Wheel Knuckle Nut (Upper)	158-193	117-142
Lug Nuts	115-142	85-104
Brake Caliper Locating Pins	87-119	65-87
Rear Brake Anti-Lock Sensor Retaining Bolts	19-27	14-19

General Specifications

Item	Specification
Premium Long-Life Grease XG-1-C	ESA-M1C75-B
Constant Velocity Joint Grease (High Temp) E43Z-19590-A	ESP-M1C207-A

Half-Shaft Assembled Length

mm	Inches
722.4	28.44

Unlicensed Product Ford Motor Company

SECTION 205-02 Rear Drive Axle/Differential — Ford 8.8-Inch Ring Gear

VEHICLE APPLICATION: Mark VIII

SUBJECT **PAGE**

DESCRIPTION AND OPERATION
Rear Drive Axle and Differential 205-02-2
Axle Identification Tag 205-02-4
DIAGNOSIS AND TESTING
Rear Drive Axle and Differential 205-02-4
IN-VEHICLE REPAIR
Companion Flange and Pinion Seal 205-02-7
Stub Shaft Pilot Bearing Housing and Seal 205-02-5
REMOVAL AND INSTALLATION
Rear Axle Assembly 205-02-13
DISASSEMBLY AND ASSEMBLY
Axle 205-02-16
SPECIFICATIONS 205-02-41

Official Licensed Product
Ford Motor Company

DESCRIPTION AND OPERATION

Rear Drive Axle and Differential

The rear axle assembly contains the following features:

- integral-type housing hypoid gear design has the centerline of pinion set below the centerline of ring gear.
- hypoid ring gear and pinion which consists of a 224-mm (8.8-inch) diameter ring gear and an overhung drive pinion which is supported by two opposed tapered roller bearings.
- pinion bearing preload is maintained by a drive pinion collapsible spacer on the pinion shaft and adjusted by the pinion nut.
- rear axle housing (4010) assembly which consists of a cast aluminum center section and a cast-aluminum rear axle housing cover (4033).
- axle housing cover which uses a silicone sealant rather than a gasket.
- aluminum rear axle housing that must be spread in order to remove the differential case (4204).
- differential case which is a one-piece design with two openings to allow for assembly of internal components and lubricant flow.
- differential pinion shaft (4211) which is retained by a threaded differential pinion shaft lock bolt assembled to the differential case.
- differential case which is mounted in the rear axle housing between two opposed differential bearings (4221).
- differential bearings which are retained in the rear axle housing by removable bearing caps.
- differential bearing preload and ring gear backlash are adjusted by differential bearing shims (4067) located between the differential bearing cup (4222) and the rear axle housing.
- the use of a pinion depth gauge is required for proper differential ring gear and pinion adjustment.
- the halfshafts are held in the differential case by a driveshaft bearing retainer circlip (3Z498) that is located on the inboard cv joint stub shaft pilot bearing housing (4B413) . When each halfshaft is installed, the driveshaft bearing retainer circlip engages a step in the differential side gear (4236).

Official Licensed Product
Ford Motor Company

DESCRIPTION AND OPERATION (Continued)

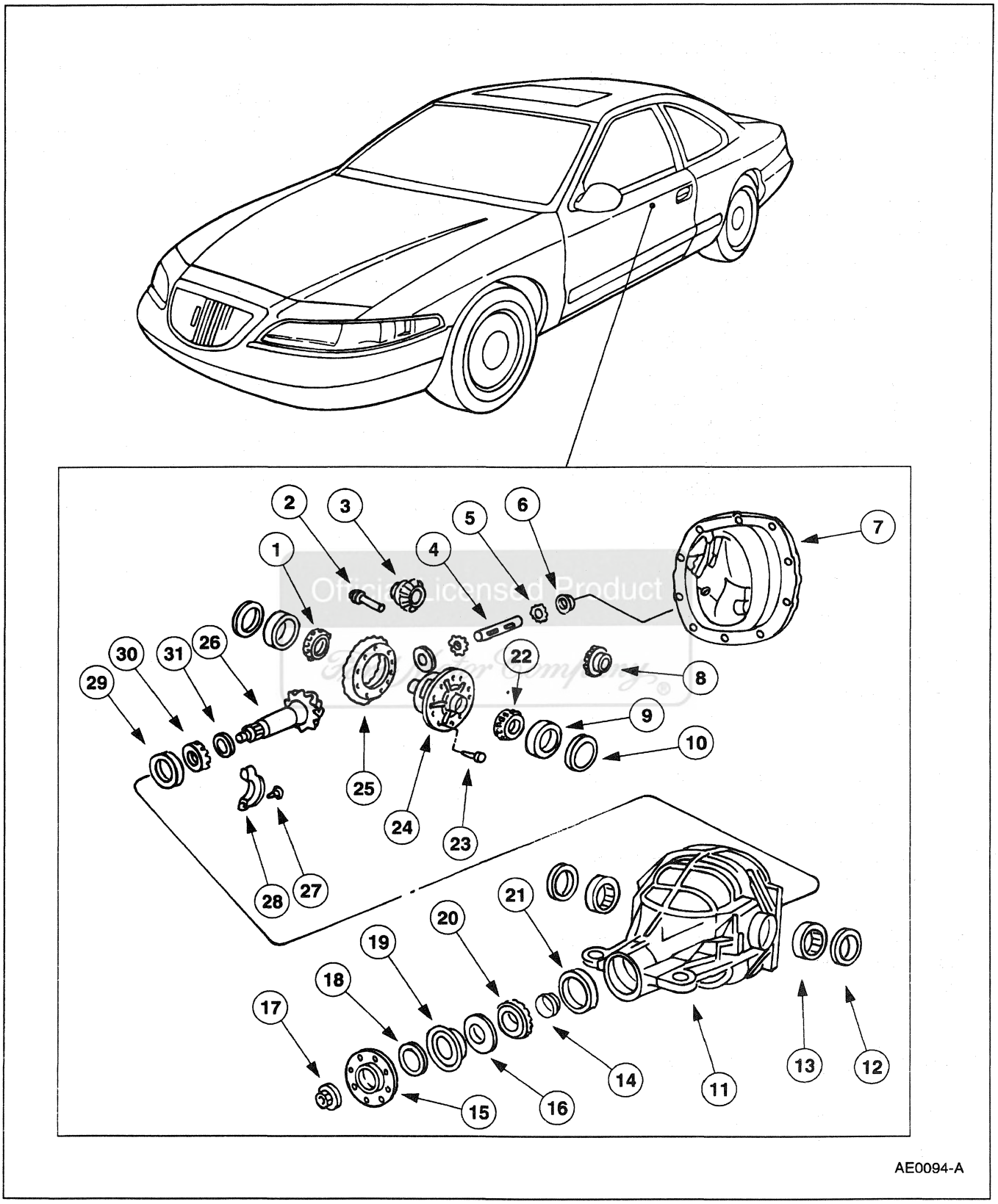

DESCRIPTION AND OPERATION (Continued)

Item	Part Number	Description
1	4221	Differential Bearing (RH)
2	4241	Differential Pinion Shaft Lock Bolt
3	4236	Differential Side Gear (RH)
4	4211	Differential Pinion Shaft
5	4215	Differential Pinion Gear
6	4230	Differential Pinion Thrust Washer
7	4033	Axle Housing Cover
8	4236	Differential Side Gear (LH)
9	4222	Differential Bearing Cup
10	4067	Differential Bearing Shim
11	4010	Rear Axle Housing
12	4B416	Inboard Cv Joint Stub Shaft Pilot Bearing Housing Seal
13	4B413	Inboard Cv Joint Stub Shaft Pilot Bearing Housing
14	4662	Differential Drive Pinion Collapsible Spacer
15	4851	Rear Axle Companion Flange
16	4670	Rear Axle Drive Pinion Shaft Oil Slinger
17	389546-S100	Pinion Nut
18	4859	Drive Pinion Oil Seal Deflector
19	4676	Rear Axle Drive Pinion Seal
20	4621	Pinion Bearing
21	4616	Differential Drive Pinion Bearing Cup
22	4221	Differential Bearing (LH)
23	4216	Rear Axle Ring Gear Case Bolt
24	4204	Differential Case
25	—	Ring Gear (Part of 4209)
26	—	Pinion (Part of 4209)
27	56187-S	Bolt
28	—	Differential Bearing Cap (Part of 4010)
29	4628	Rear Axle Pinion Bearing Cup
30	4630	Pinion Bearing
31	4663	Drive Pinion Bearing Adjustment Shim

(Continued)

Official Licensed Product
Ford Motor Company

The rear drive axle operates as follows:

- The rear axle drive pinion receives power from the engine through the transmission and driveshaft (4602).
- The pinion gear rotates the differential case when engaged with the ring gear, which is bolted to the differential case outer flange.
- Inside the differential case, two differential pinion gears (4215) are mounted on a differential pinion shaft which is pinned to the differential case.
- These differential pinion gears are engaged with the differential side gears to which the halfshafts are splined.
- As the differential case turns, it rotates the halfshafts and rear wheels.
- When it is necessary for one wheel and halfshaft to rotate faster than the other, the faster turning differential side gear causes the differential pinion gears to roll on the slower turning differential side gear . This allows differential action between the two halfshafts.

Axle Identification Tag

Refer to Section 205-00.

DIAGNOSIS AND TESTING

Rear Drive Axle and Differential

Refer to Section 205-00.

IN-VEHICLE REPAIR

Stub Shaft Pilot Bearing Housing and Seal

Special Tool(s)

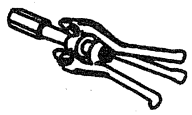 ST1200-A	Bearing Cup Puller 308-047 (T77F-1102-A)
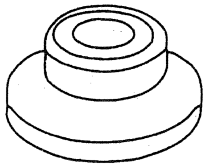 ST1676-A	Differential Seal Replacer 205-293 (T89P-4850-A)
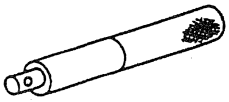 ST1326-A	Driver Handle 205-153 (T80T-4000-W)

(Continued)

Special Tool(s)

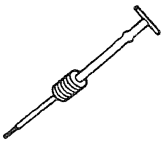 ST1185-A	Impact Slide Hammer 100-001 (T50T-100-A)
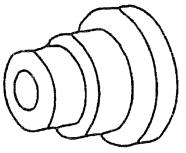 ST1721-A	Needle Bearing Replacer 205-288 (T89P-1244-A)

Official Licensed Product
Ford Motor Company

Removal

1. Remove halfshaft assembly; refer to Section 205-05.

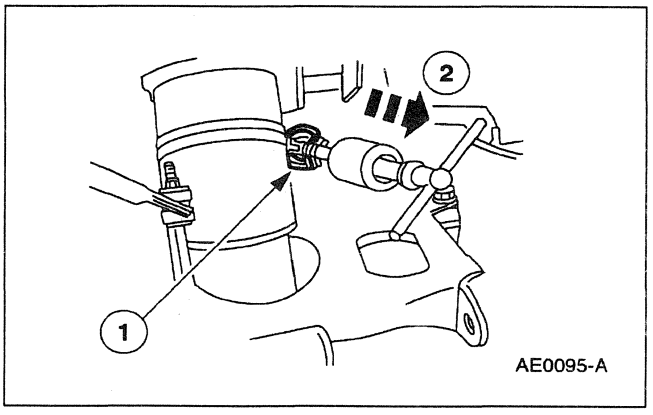

2. **NOTE:** If only the inboard cv joint stub shaft pilot bearing housing seal (4B416) is to be replaced, engage the bearing cup puller tangs on the inboard cv joint stub shaft pilot bearing housing seal.

   Remove the inboard cv joint stub shaft pilot bearing housing seal and inboard cv joint stub shaft pilot bearing housing (4B413).

   1 Install the Bearing Cup Puller and Impact Slide Hammer with the tangs firmly engaged on the inboard cv joint stub shaft pilot bearing housing.

   2 Remove the inboard cv joint stub shaft pilot bearing housing seal and inboard cv joint stub shaft pilot bearing housing .

IN-VEHICLE REPAIR (Continued)

Installation

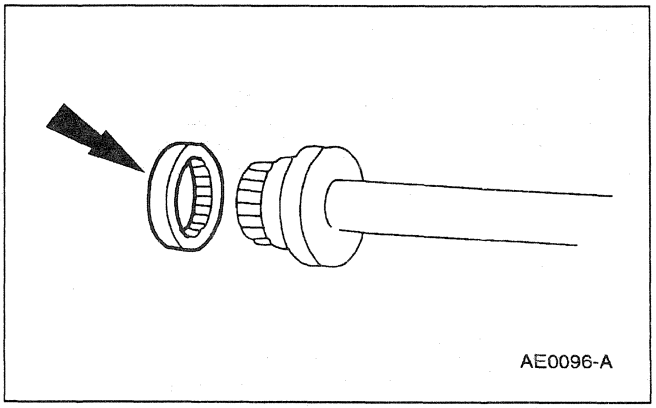

1. Lubricate the new inboard cv joint stub shaft pilot bearing housing with SAE 80W-90; Premium Rear Axle Lubricant XY-80W90-QL or equivalent meeting Ford specification WSP-M2C197-A. Place the inboard cv joint stub shaft pilot bearing housing onto the Needle Bearing Replacer and Driver Handle.

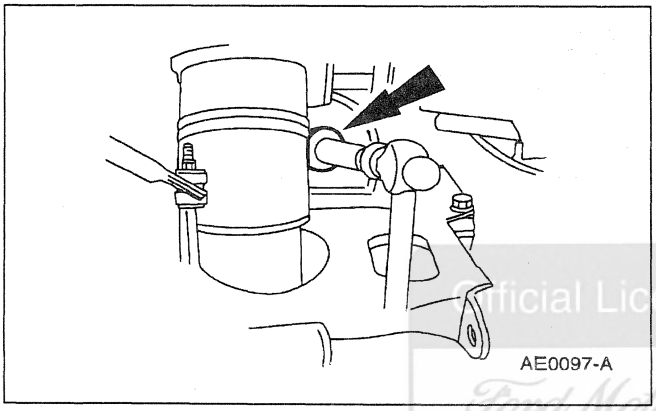

2. Install the inboard cv joint stub shaft pilot bearing housing into the rear axle housing bore.

Official Licensed Product
Ford Motor Company

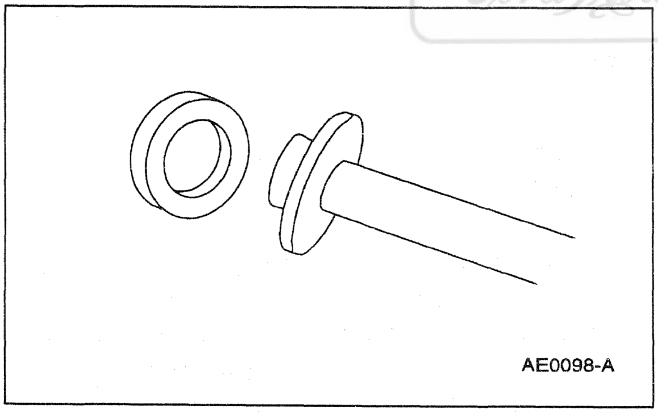

3. Lubricate the lip of the inboard cv joint stub shaft pilot bearing housing seal with Premium Long-Life Grease XG-1-C or equivalent meeting Ford specification ESA-M1C75-B. Place the inboard cv joint stub shaft pilot bearing housing seal onto the Differential Seal Replacer and Driver Handle.

IN-VEHICLE REPAIR (Continued)

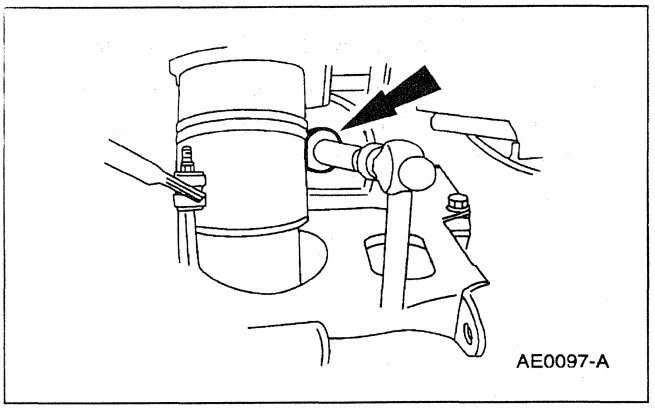

4. ⚠ **CAUTION: Installation of the inboard cv joint stub shaft pilot bearing housing seal or inboard cv joint stub shaft pilot bearing housing without the proper tool may result in an early inboard cv joint stub shaft pilot bearing housing seal or pilot failure. If the inboard cv joint stub shaft pilot bearing housing becomes cocked in the bore during installation, remove it and install a new one.**

   Carefully align the inboard cv joint stub shaft pilot bearing housing seal with the housing bore and install the inboard cv joint stub shaft pilot bearing housing seal.

5. Install the halfshaft; refer to Section 205-05.

Companion Flange and Pinion Seal

Special Tool(s)

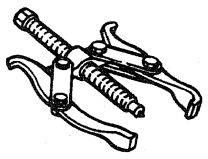 ST2026-A	2-Jaw Puller for Differential Case Bearings 205-D026 (D97L-4221-A) or Equivalent
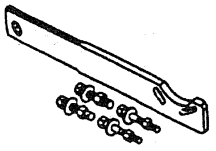 ST1257-A	Companion Flange Holding Tool 205-126 (T78P-4851-A)

Ford Licensed Product Ford Motor Company

Removal

1. ⚠ **CAUTION: This operation disturbs the pinion bearing preload. This preload must be carefully reset when assembling.**

   NOTE: Replacement of the rear axle drive pinion seal (4676) involves removal and installation of only the pinion nut and the rear axle companion flange.

   Raise the vehicle on a frame contact hoist.

IN-VEHICLE REPAIR (Continued)

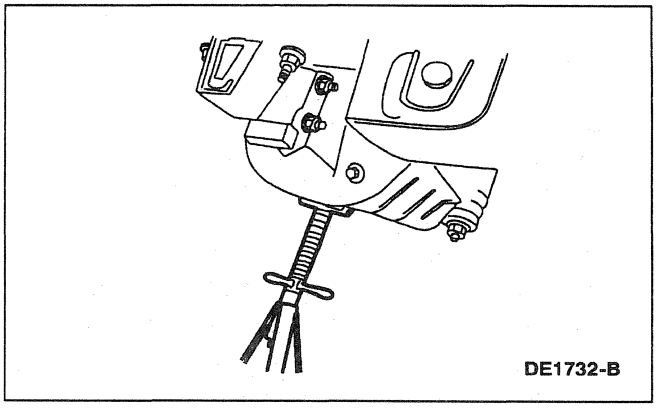

2. **NOTE:** This will allow the axle to pivot forward.
   Place an adjustable jack stand under the pinion nose of the rear axle housing (4010) and remove the retaining nuts.

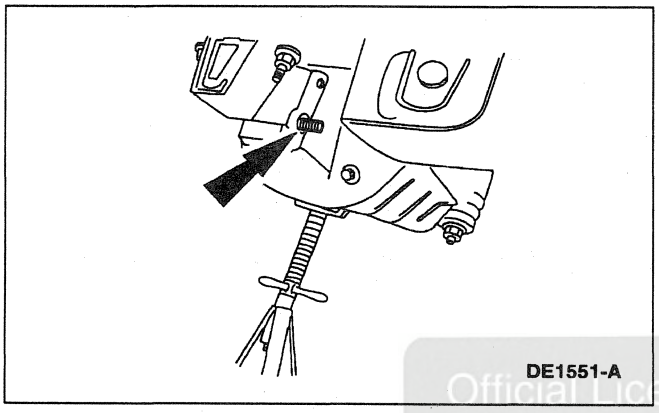

3. Install the rear axle differential rear insulator bolt in the lower bolt hole only.

Official Licensed Product
Ford Motor Company

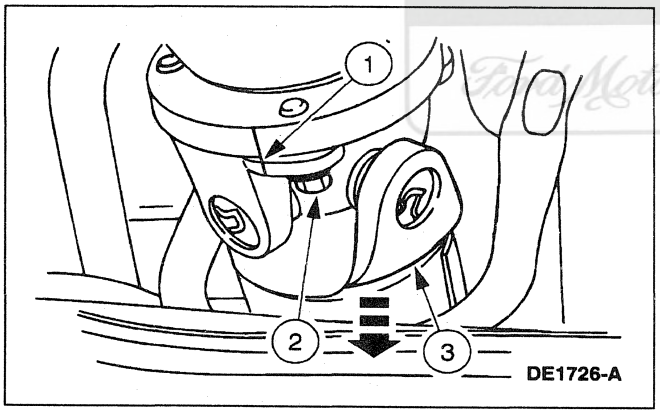

4. Separate the driveshaft centering socket yoke (4782) from the rear axle companion flange.
   1 Index mark the driveshaft centering socket yoke and the rear axle companion flange.
   2 Remove the four retaining bolts.
   3 Slide the driveshaft (4602) forward and rest on the driveshaft center bridge support reinforcement (4A315).

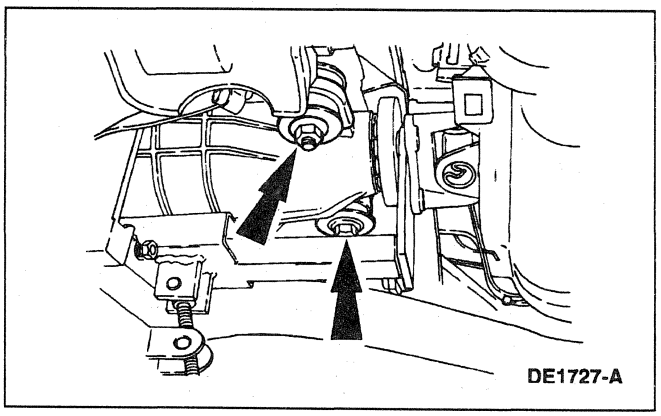

5. **WARNING: THE REAR AXLE HOUSING MUST ALWAYS BE SUPPORTED BY A JACK STAND.**
   Remove the rear axle differential front lower insulator retaining nuts.

IN-VEHICLE REPAIR (Continued)

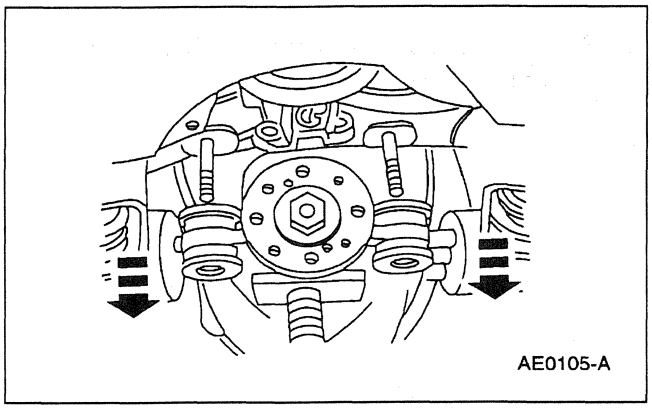

6. Lower the rear axle housing to access the rear axle companion flange.

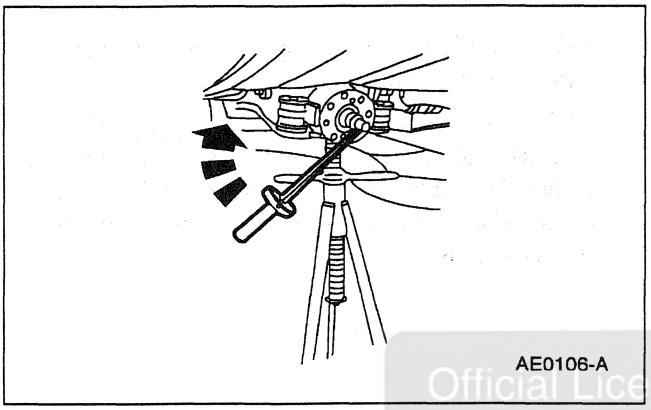

7. With an inch-pound torque wrench, record the torque required to maintain rotation of the pinion through several revolutions.

Official Licensed Product
Ford Motor Company

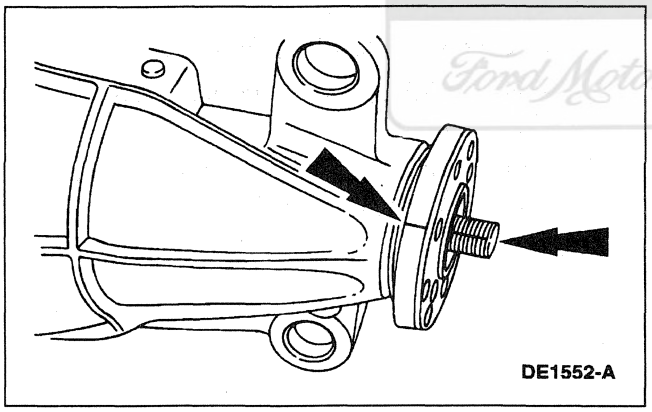

8. Index mark the rear axle companion flange and the drive pinion stem.

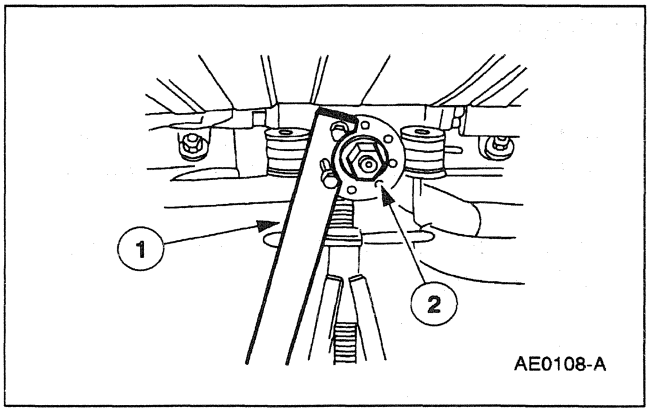

9. ⚠ **CAUTION: Do not strike the rear axle companion flange to remove it. If necessary use the 2-Jaw Puller for Differential Case Bearings.**

   Remove the rear axle companion flange.

   1 Install the Companion Flange Holding Tool.

   2 Remove the pinion nut.

IN-VEHICLE REPAIR (Continued)

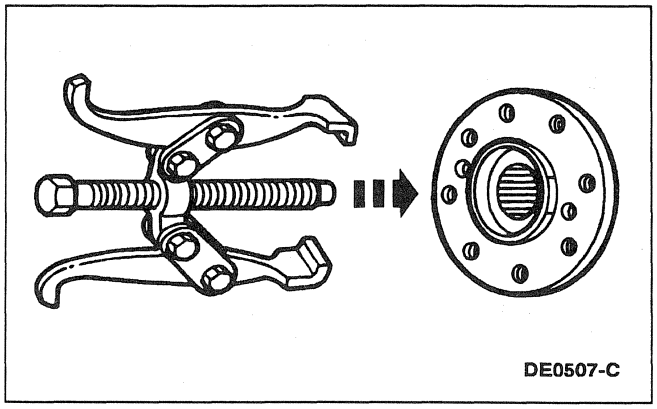
DE0507-C

10. Remove the rear axle companion flange from the drive pinion stem.

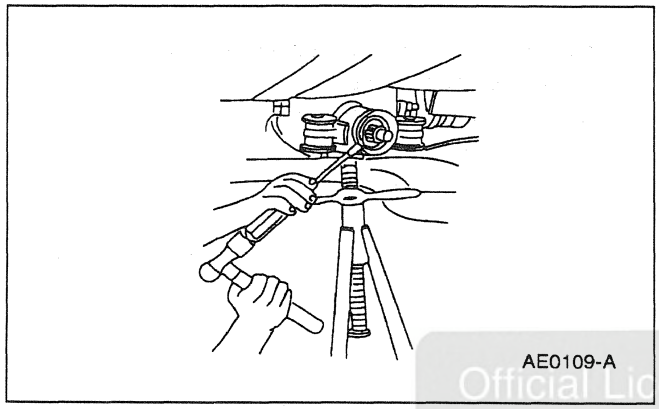
AE0109-A

11. **NOTE:** Before proceeding, place a drain pan under the rear axle housing.

    Position a screwdriver under the flange of the rear axle drive pinion seal and strike with a hammer to wedge the screwdriver blade between the metal flange of the rear axle drive pinion seal and the rear axle housing.

Official Licensed Product
Ford Motor Company

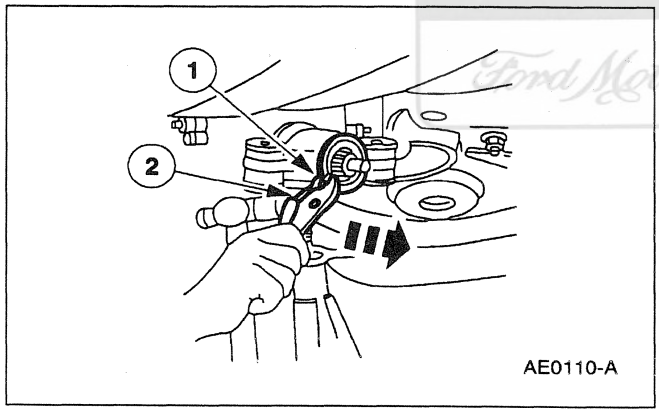

AE0110-A

12. Remove the rear axle drive pinion seal.
    1 Attach locking pliers to the rear axle drive pinion seal.
    2 Strike the pliers with a hammer to remove the rear axle drive pinion seal.

Installation

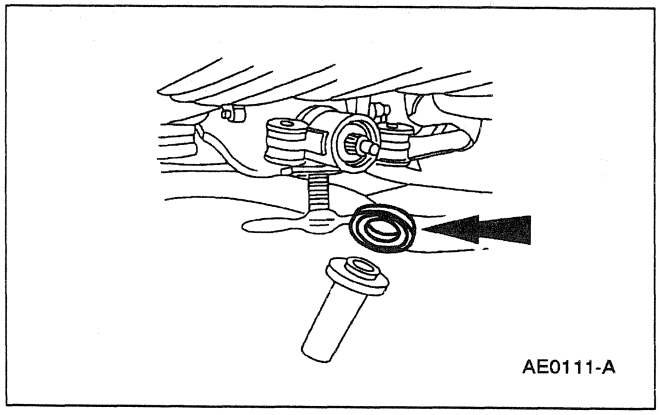
AE0111-A

1. **NOTE:** Check the rear axle companion flange, rear axle housing and pinion stem splines for nicks or burrs.

   Place the new rear axle drive pinion seal on the pinion seal replacer.

IN-VEHICLE REPAIR (Continued)

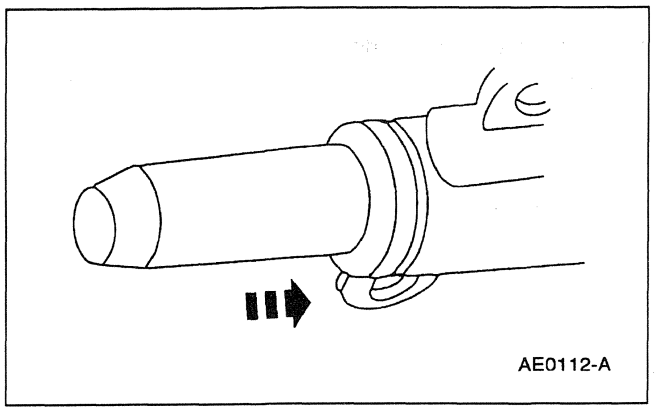

2. ⚠ **CAUTION: Installation without the proper tool can result in early rear axle drive pinion seal failure. If the rear axle drive pinion seal becomes cocked during installation, remove and replace with a new rear axle drive pinion seal.**

   Install the rear axle drive pinion seal in the rear axle housing.

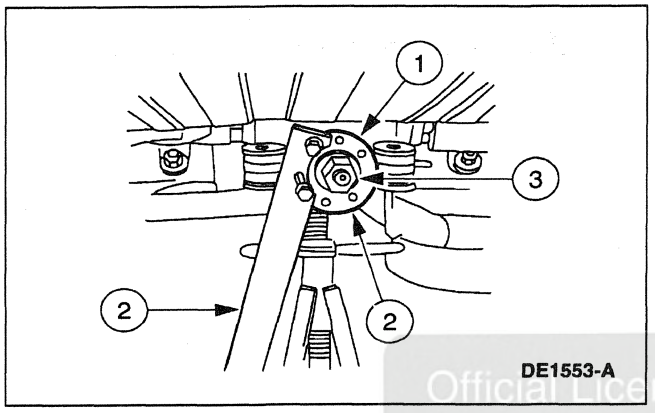

3. ⚠ **CAUTION: The rear axle companion flange must never be hammered on or assembled with power tools.**

   NOTE: Apply a small amount of SAE 80W-90; Premium Rear Axle Lubricant XY-80W90-QL or equivalent meeting Ford specification WSP-M2C197-A to the rear axle drive pinion stem splines and the washer side of the nut.

   Install the rear axle companion flange.

   1 Align index marks on the rear axle companion flange and the pinion stem.

   2 Install the rear axle companion flange and the Companion Flange Holding Tool.

   3 Install a new pinion nut.

Official Licensed Product
Ford Motor Company®

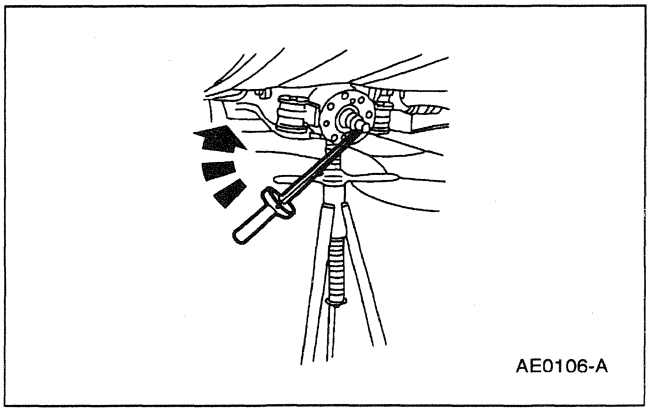

4. ⚠ **CAUTION: Never back off the pinion nut to reduce preload. If reduced preload is required, install a new drive pinion collapsible spacer and pinion nut.**

   NOTE: Refer to Adjustment Torque Specifications at the end of this section.

   Take frequent pinion bearing preload readings.

   If the original recorded pinion bearing preload is less than the specification for the used bearings, tighten to the specification. If the preload is higher than the specification, tighten the pinion bearings to the original reading as recorded.

   - Refer to Specifications in this section.

IN-VEHICLE REPAIR (Continued)

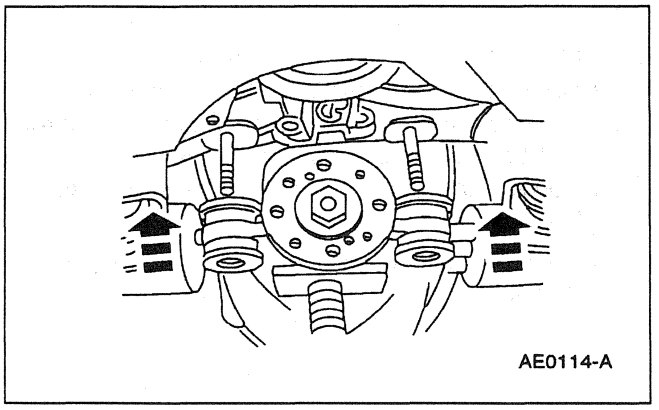

5. Raise the rear axle housing onto the front insulator bolts.

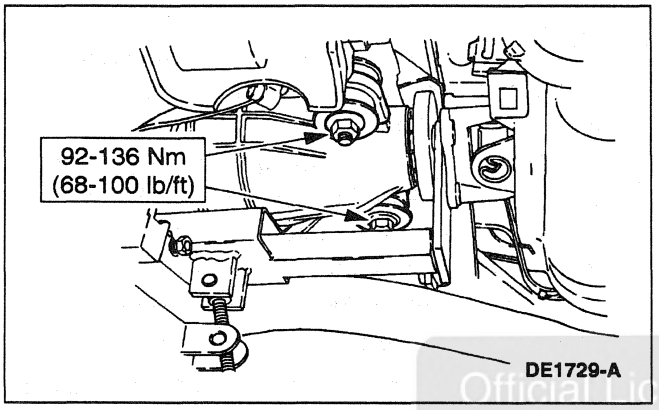

6. Tighten the front insulator bolt retaining nuts.

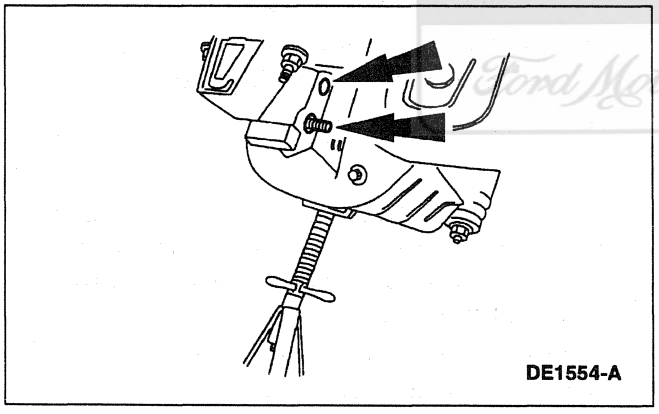

7. Install the rear axle differential rear insulator bolts.

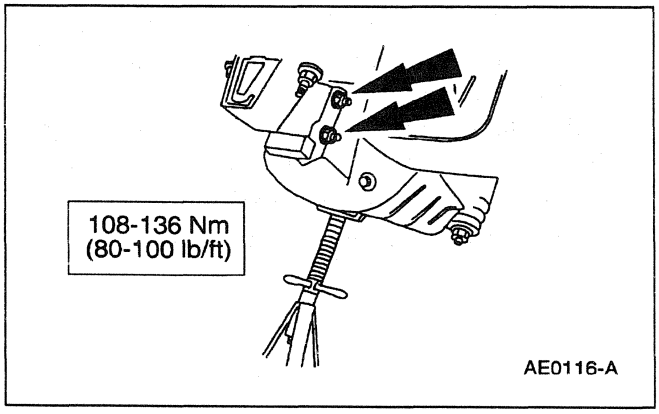

8. Install the retaining nuts and tighten to specification.

Official Licensed Product
Ford Motor Company

IN-VEHICLE REPAIR (Continued)

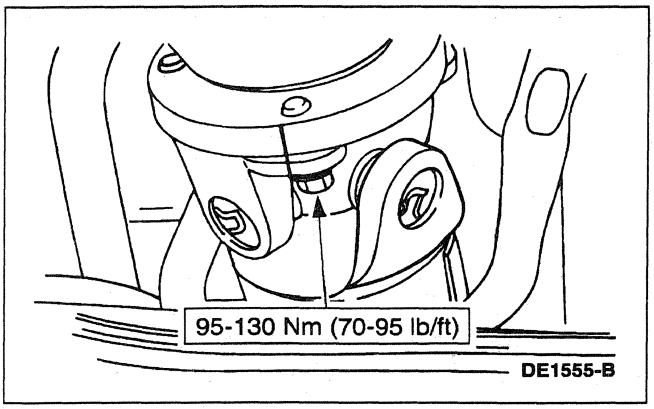

9. Align the index mark on the driveshaft centering socket yoke to the index mark on the rear axle companion flange.
   - Install the four retaining bolts and tighten to specification.

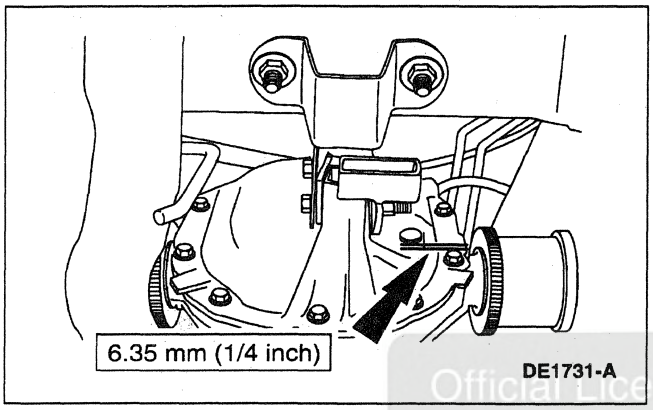

10. Remove the filler plug and check the lubricant level.
    - If necessary, fill the rear axle housing with SAE 80W-90; Premium Rear Axle Lubricant XY-80W90-QL or equivalent meeting Ford specification WSP-M2C197-A to below the bottom of the filler hole by the specification shown.

Official Licensed Product
Ford Motor Company

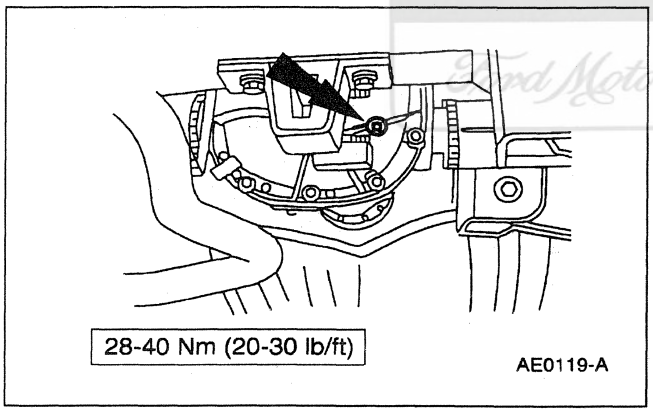

11. Install the filler plug.

12. Lower the vehicle.

REMOVAL AND INSTALLATION

Rear Axle Assembly

Removal

1. Remove the rear axle halfshafts; refer to Section 205-05.

REMOVAL AND INSTALLATION (Continued)

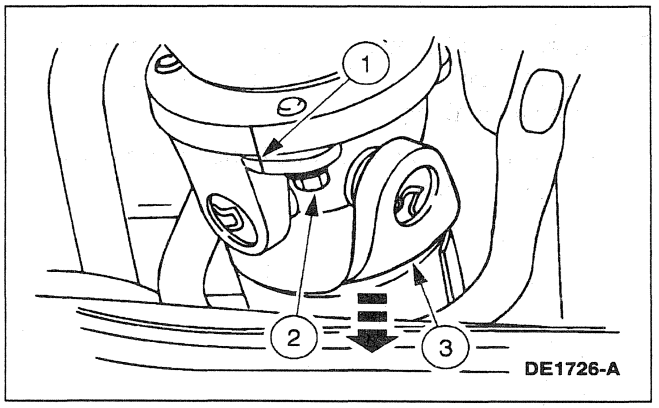

2. Separate the driveshaft centering socket yoke (4782) from the rear axle universal joint flange (4851) .
   1 Index mark the driveshaft centering socket yoke and the rear axle universal joint flange.
   2 Remove the four retaining bolts.
   3 Slide the driveshaft (4602) forward and rest on the driveshaft center bridge support reinforcement (4A315).

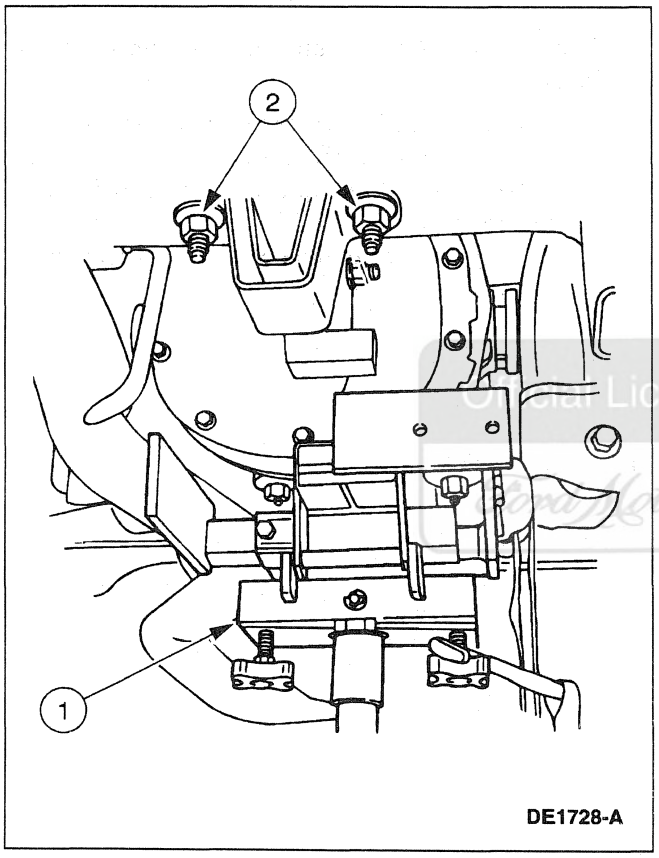

3. Disconnect the rear axle differential rear insulator.
   1 Support the rear axle housing (4010) with a transmission jack.
   2 Remove the retaining nuts.

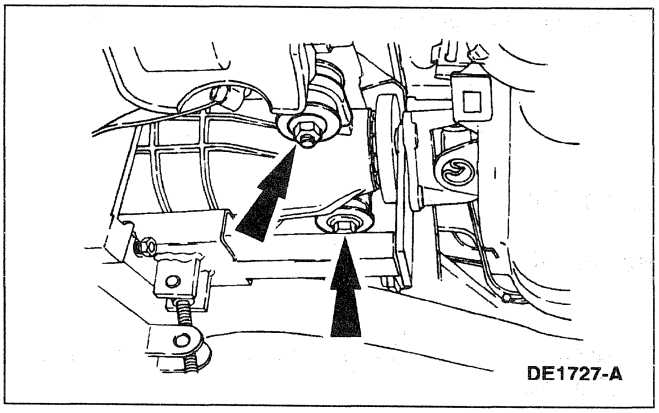

4. **WARNING: THE REAR AXLE HOUSING MUST ALWAYS BE SUPPORTED BY A JACKSTAND.**

   Remove the rear axle differential front lower insulator retaining nuts.

Official Licensed Product Ford Motor Company

REMOVAL AND INSTALLATION (Continued)

5. Lower the rear axle housing out of the vehicle.

Installation

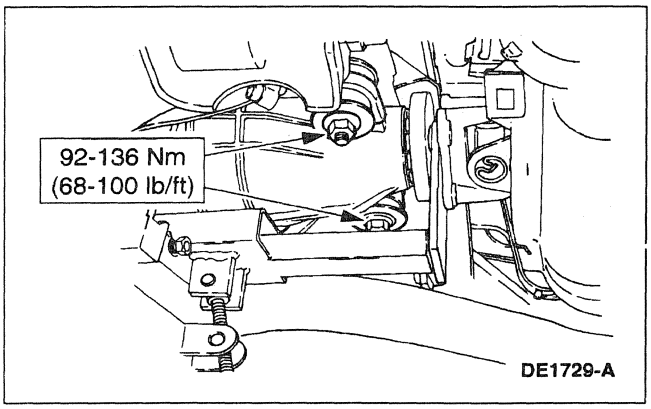

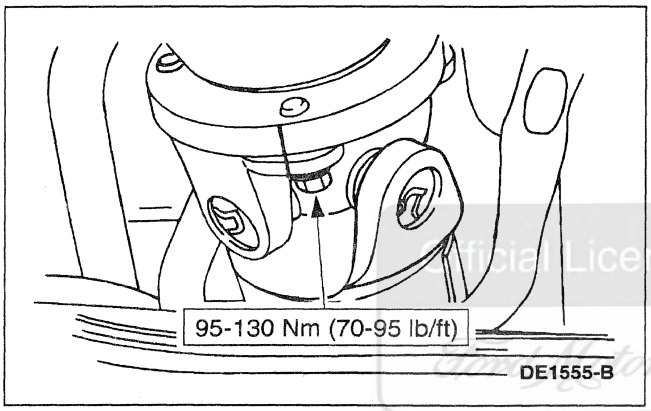

1. Follow the removal procedure in reverse order.

Official Licensed Product
Classic Motor Company

REMOVAL AND INSTALLATION (Continued)

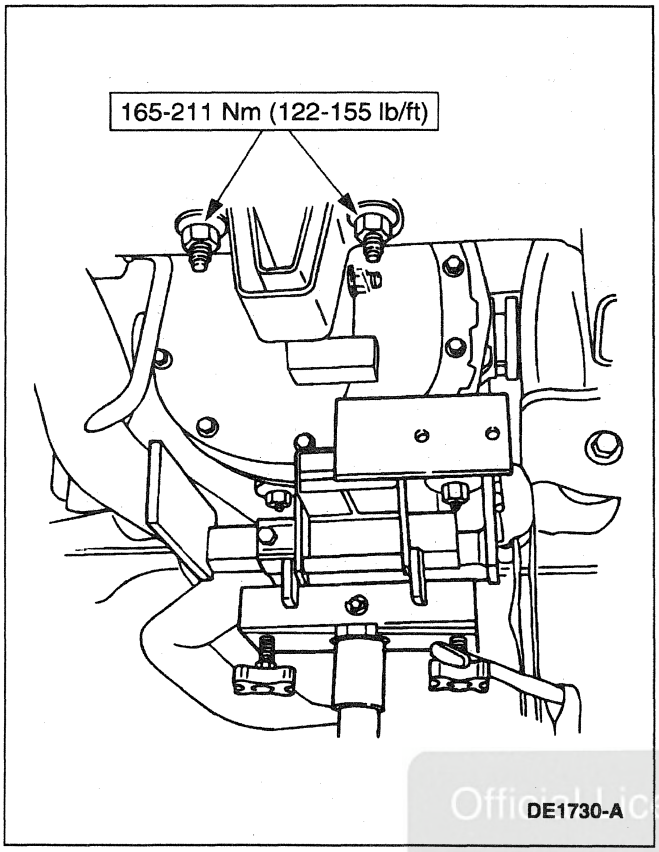

Official Licensed Product
Ford Motor Company

DISASSEMBLY AND ASSEMBLY

Axle

Special Tool(s)

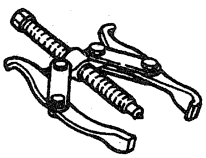 ST2026-A	2-Jaw Puller for Differential Case Bearings 205-D026 (D97L-4221-A) or Equivalent
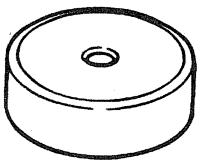 ST1743-A	Aligning Adapter T76P-4020-A3

(Continued)

Special Tool(s)

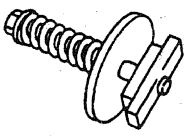 ST1165-A	Bearing Preload Tool 205-395 (T93P-4220-AR)
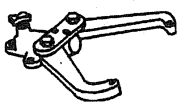 ST1186-A	Bench Mounted Holding Fixture 307-003 (T57L-500-B)

(Continued)

DISASSEMBLY AND ASSEMBLY (Continued)

Special Tool(s)

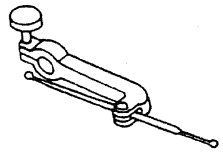 ST1348-A	Clutch Housing Alignment Adapter 308-021 (T75L-4201-A)
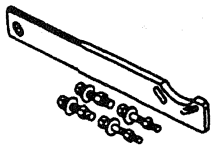 ST1257-A	Companion Flange Holding Tool 205-126 (T78P-4851-A)
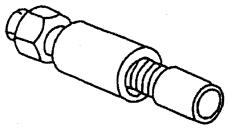 ST1724-A	Companion Flange Replacer TOOL-4858-E or Equivalent
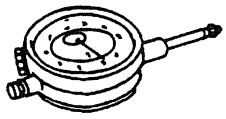 ST1183-A	Dial Indicator 100-D005 (D78P-4201-G) or Equivalent
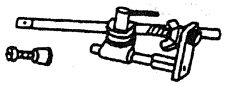 ST1182-A	Dial Indicator Bracketry 100-D004 (D78P-4201-F) or Equivalent
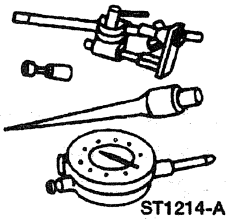 ST1214-A	Dial Indicator with Bracketry 100-002 (TOOL-4201-C) or Equivalent
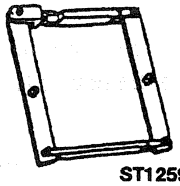 ST1259-A	Differential Housing Spreader 205-001 (TOOL-4000-E) or Equivalent

(Continued)

Special Tool(s)

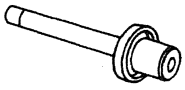 ST1375-A	Differential Side Bearing Replacer 205-010 (T57L-4221-A2)
ST1432-A	Driver Handle T76P-4020-A11
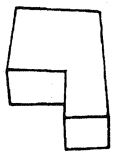 ST1431-A	Gauge Block T76P-4020-A10
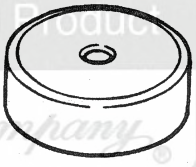 ST1743-A	Gauge Disc T79P-4020-A18
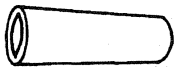 ST1434-A	Gauge Tube T93P-4020-A
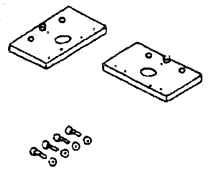 ST1344-A	Housing Spreader Adapters 205-335 (T93P-4000-A)
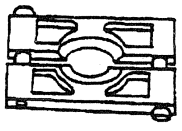 ST1310-A	Pinion Bearing Cone Remover 205-055 (T71P-4621-B)

(Continued)

Ford Motor Company

DISASSEMBLY AND ASSEMBLY (Continued)

Special Tool(s)

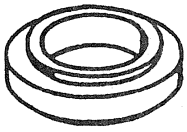 ST1367-A	Pinion Bearing Cone Replacer 205-005 (T53T-4621-C)
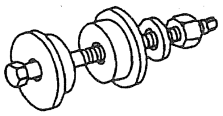 ST1678-A	Pinion Bearing Cup Replacer 205-054 (T71P-4616-A)
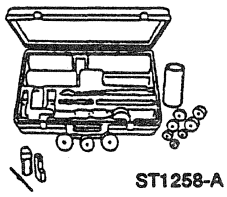 ST1258-A	Pinion Depth Gauge 205-S127 (T79P-4020-A)

Special Tool(s)

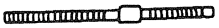 ST1429-A	Screw T76P-4020-A9
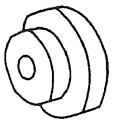 ST1725-A	Step Plate 205-D061 (D83T-4205-C2) or Equivalent

(Continued)

Official Licensed Product
Ford Motor Company

Disassembly

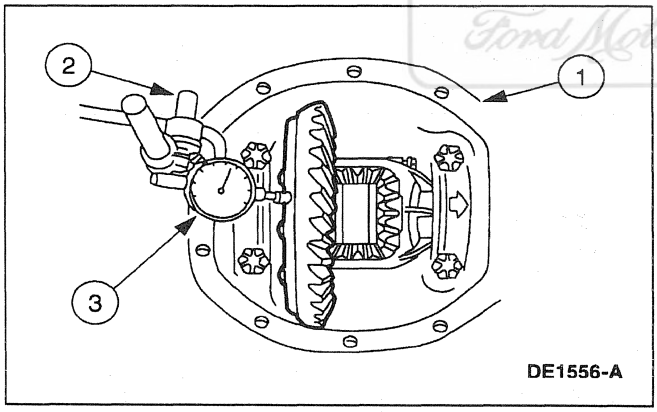

DE1556-A

1. Check the ring gear runout.
   1 Remove the axle housing cover (4033).
   2 Install the Dial Indicator with Bracketry.
   3 Check and note the ring gear runout.

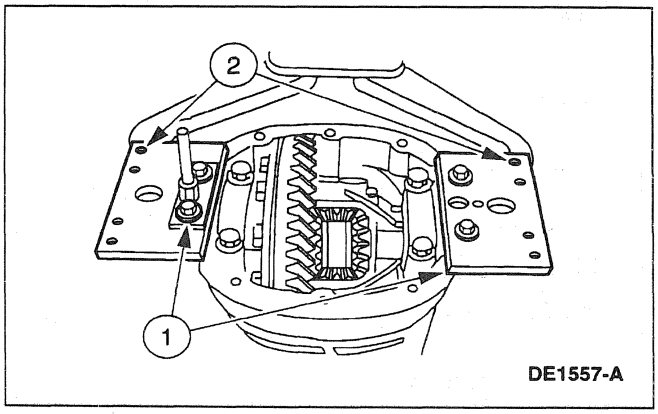

DE1557-A

2. ⚠ **CAUTION: Extreme care must be taken not to damage aluminum rear axle housing (4010) while performing these procedures.**

   Mount the rear axle housing on the Bench Mounted Holding Fixture.
   1 Attach the Dial Indicator Bracketry and the Housing Spreader Adapters to the rear axle housing with four cover bolts.
   2 Attach the Housing Spreader Adapters to the Bench Mounted Holding Fixture with two 3/8 inch x 1-1/2 inch bolts.

DISASSEMBLY AND ASSEMBLY (Continued)

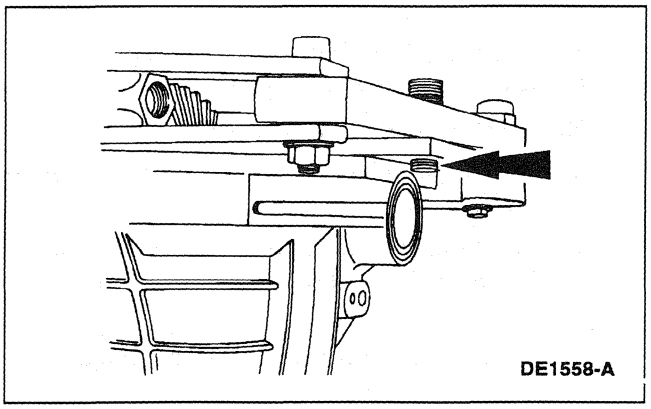

3. Install the Differential Housing Spreader onto the Housing Spreader Adapters with the spreader pins aligned with the holes in the Housing Spreader Adapters.

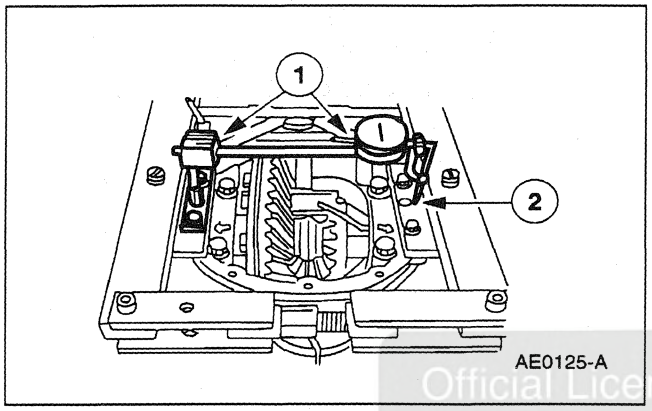

4. Assemble the Dial Indicator.
   1 Install the Dial Indicator on the Dial Indicator Bracketry.
   2 Attach the Clutch Housing Alignment Adapter to the Dial Indicator with the tip positioned in the spreader adapter hole.

Official Licensed Product
Ford Motor Company

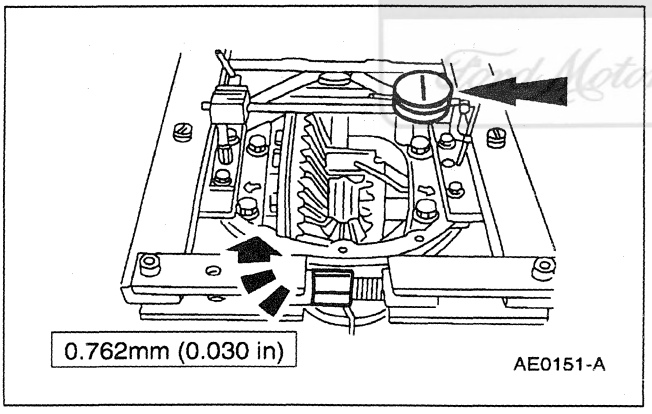

5. Adjust the Dial Indicator to zero and tighten the housing spreader screw until the rear axle housing is spread to specification.
   - Remove the Dial Indicator and Bracketry.

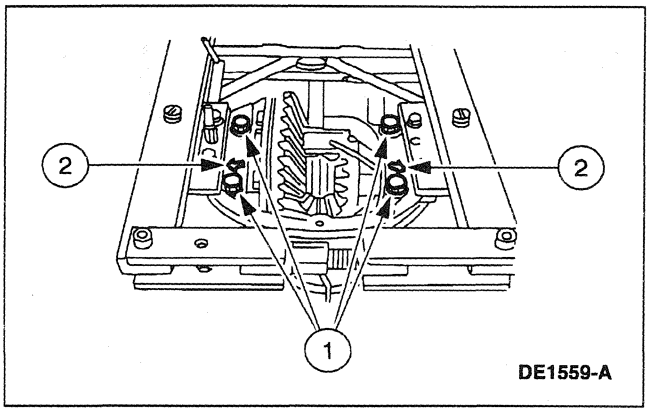

6. **NOTE:** Mark the position of the bearing caps as arrows may not be visible. The bearing caps must be installed in their identical locations and positions.

   Remove the differential bearing caps.
   1 Remove the bearing cap retaining bolts.
   2 Remove the differential bearing caps.

DISASSEMBLY AND ASSEMBLY (Continued)

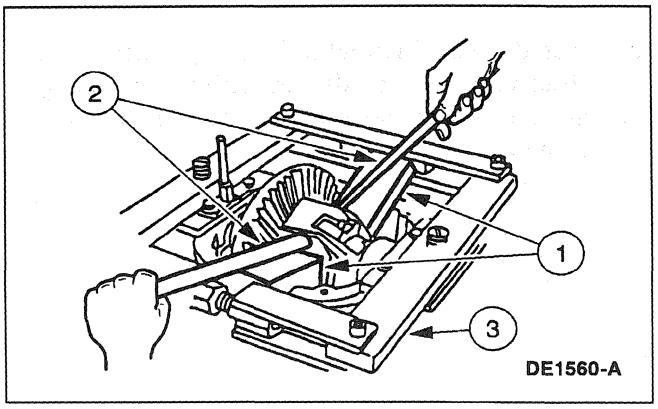

7. ⚠ **CAUTION: Wood blocks must be used to avoid rear axle housing damage.**

   Remove the differential case (4204).

   1 Position wood blocks on top and bottom of the differential (4026).

   2 Pry the differential case and the differential bearing shims (4067) out of the rear axle housing.

   3 Remove the Differential Housing Spreader.

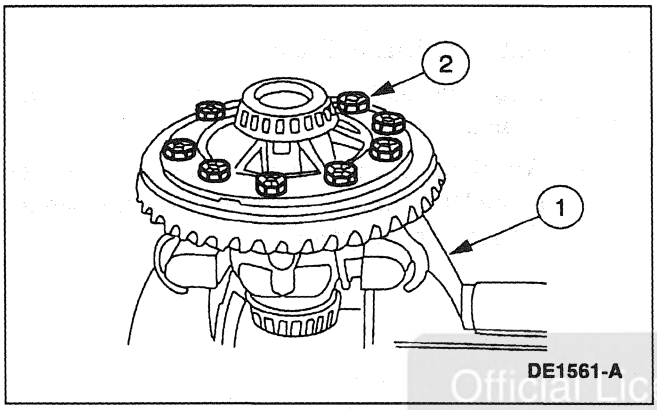

8. Remove the ring gear.

   1 Position the differential case in a vise.

   2 Remove the ten retaining bolts.

Official Licensed Product
Ford Motor Company

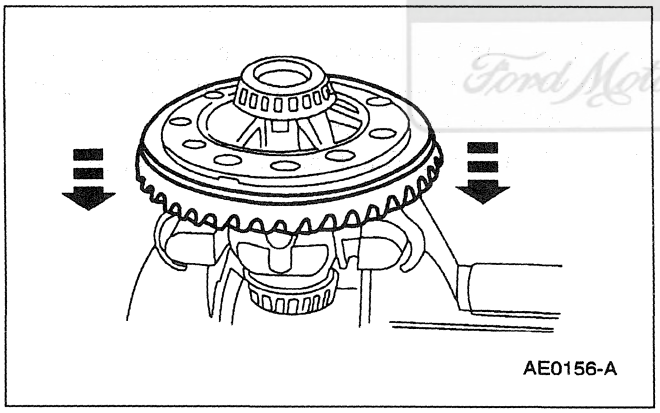

9. Using a drift that will bottom in the ring gear bolt holes, strike at alternate holes around the gear and remove the ring gear.

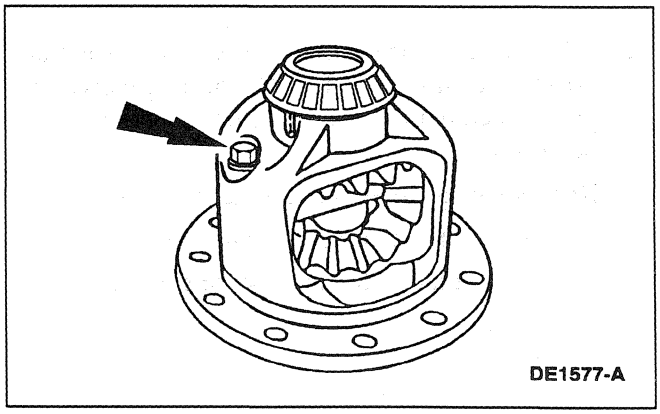

10. Remove the differential pinion shaft lock bolt.

DISASSEMBLY AND ASSEMBLY (Continued)

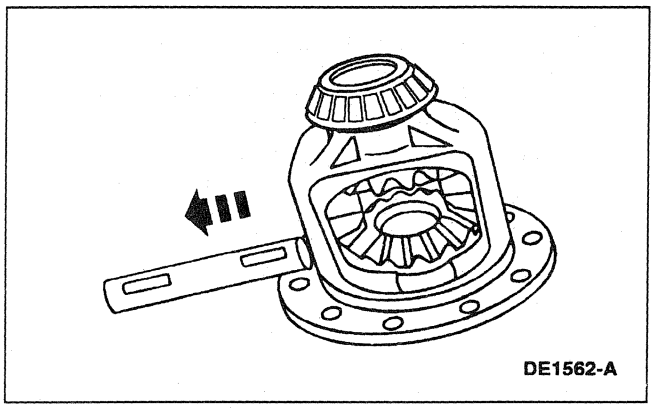

11. Remove the differential pinion shaft (4211).

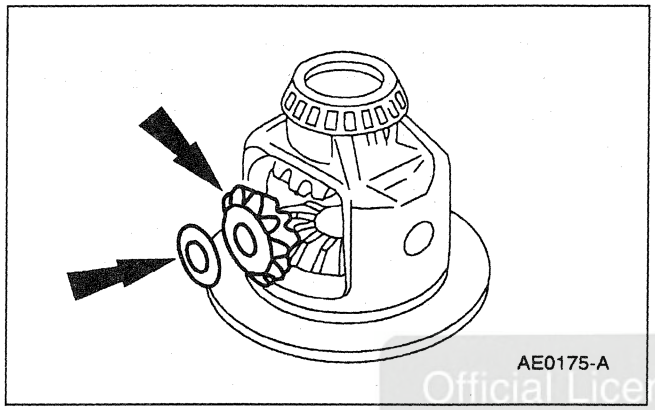

12. Rotate and remove the differential pinion gears (4215) and the differential pinion thrust washers (4230).

Official Licensed Product
Ford Motor Company

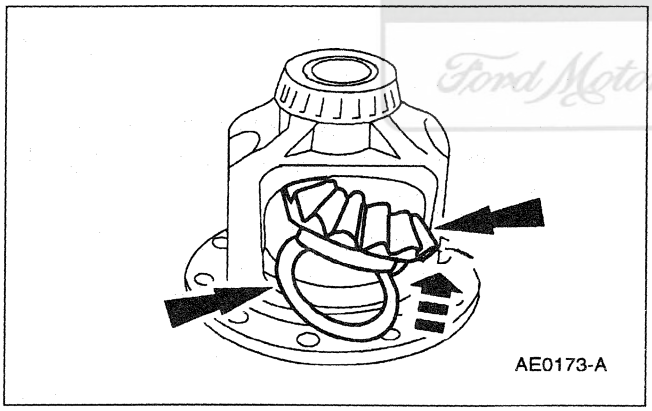

13. Remove the differential side gears (4236) and the differential side gear thrust washers (4228).

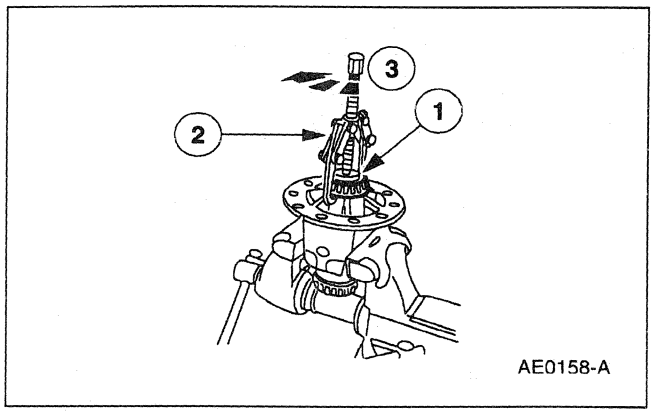

14. Remove the differential bearings (4221).
    1 Position the Step Plate in the center of the bearing.
    2 Position the 2-Jaw Puller for Differential Case Bearings on the Step Plate.
    3 Remove the differential bearing.

DISASSEMBLY AND ASSEMBLY (Continued)

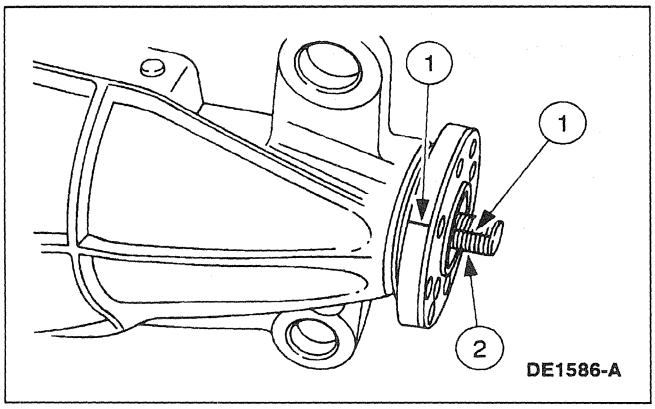

15. Remove the rear axle companion flange.
    1 Index mark the rear axle companion flange and the drive pinion stem.
    2 Remove the pinion nut.

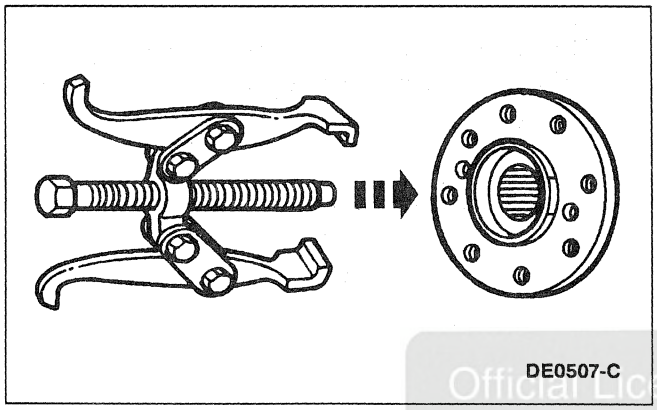

16. Remove the companion flange from the drive pinion stem using the 2-Jaw Puller for Differential Case Bearings.

Official Licensed Product
Ford Motor Company

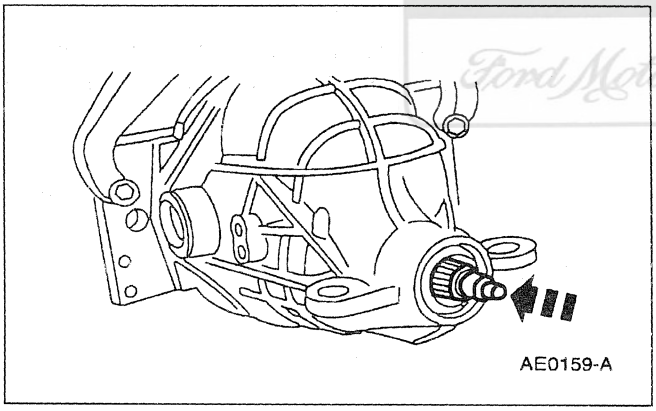

17. While holding the drive pinion, tap the pinion free using a soft-faced hammer.
    - Remove the rear axle drive pinion shaft oil slinger (4670), the rear axle drive pinion seal (4676) and the collapsible spacer.

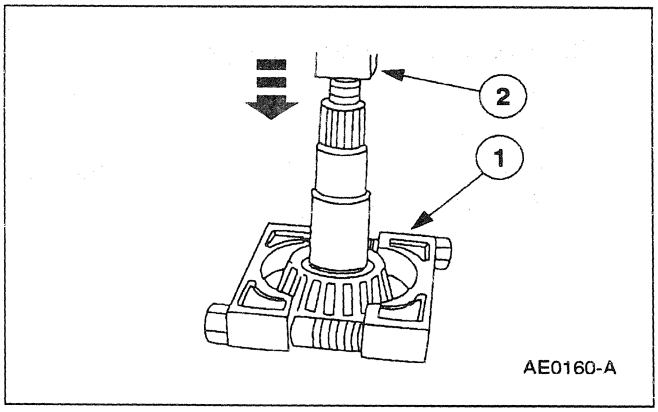

18. Remove the front pinion bearing.
    1 Position the Pinion Bearing Cone Remover under the pinion bearing.
    2 Using a press, remove the pinion bearing.

DISASSEMBLY AND ASSEMBLY (Continued)

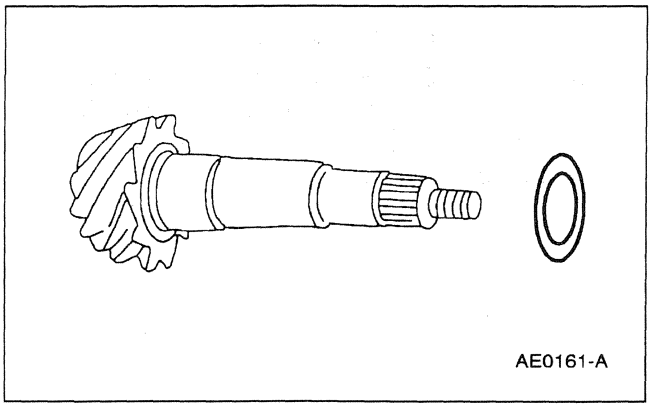
AE0161-A

19. **NOTE:** Measure the drive pinion bearing adjustment shim (4663) , which is found under the differential pinion bearing, with a micrometer and record the thickness (use this as a reference to compare the shim gauge reading prior to installing the differential pinion bearing).

    Remove the drive pinion bearing adjustment shim.

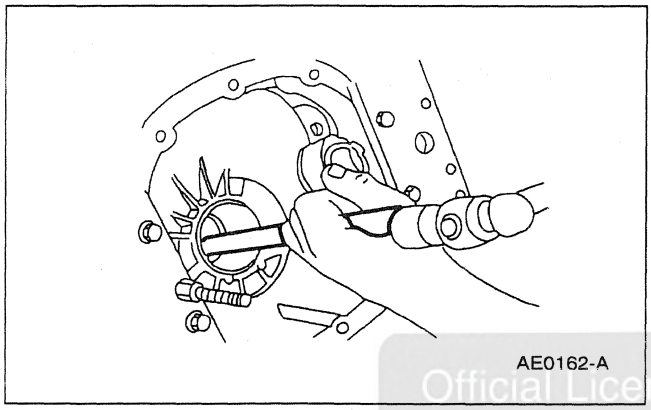
AE0162-A

20. Using a brass drift, tap the rear axle pinion bearing cup (4628) alternately on each side to prevent the rear axle pinion bearing cup from cocking in the rear axle housing bore.

Official Licensed Product
Ford Motor Company

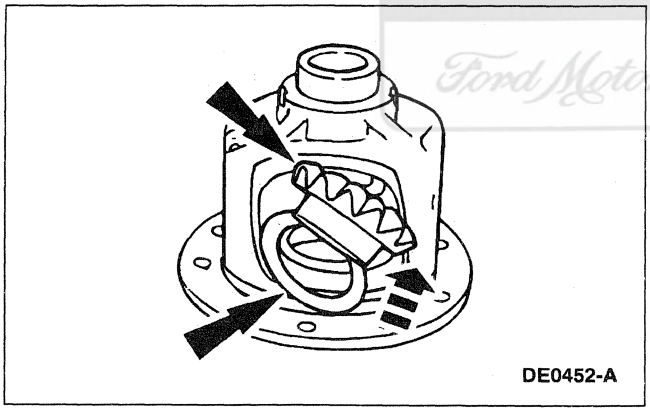
DE0452-A

21. Use Thermally Stable Rear Axle Lubricant XY-80W90-QL meeting Ford specification WSP-M2C197-A to lubricate the differential side gear thrust washers and the differential side gear journals.
    - Position the differential side gear thrust washers on the differential side gears.

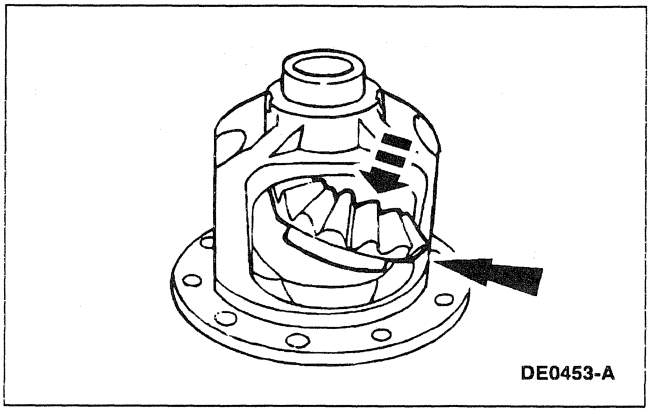
DE0453-A

22. Position the differential side gears.

DISASSEMBLY AND ASSEMBLY (Continued)

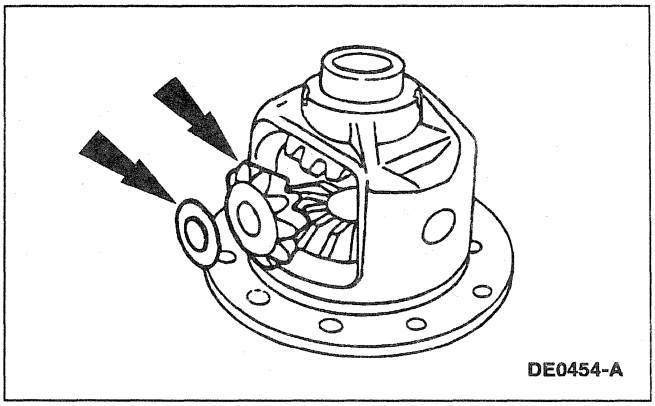

23. Use Thermally Stable Rear Axle Lubricant XY-80W90-QL meeting Ford specification WSP-M2C197-A to lubricate the differential pinion thrust washers and the differential pinion gears and assemble.

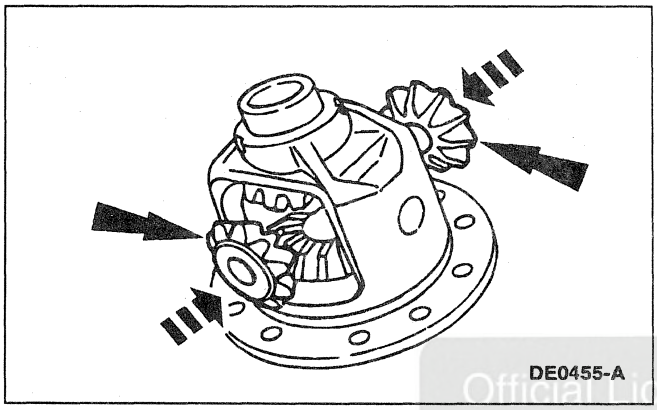

24. Engage the differential pinion gears opposite the differential side gears.

Official Licensed Product
Ford Motor Company

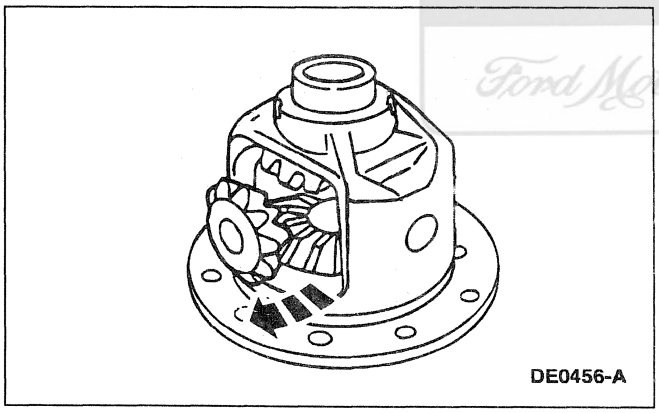

25. Rotate the differential pinion gears to align with the differential pinion shaft bore.

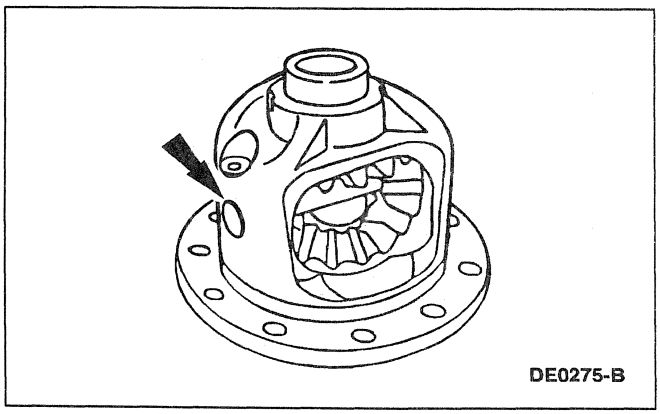

26. Insert the differential pinion shaft.
    - Align the hole in the differential pinion shaft with the hole in the differential case.

DISASSEMBLY AND ASSEMBLY (Continued)

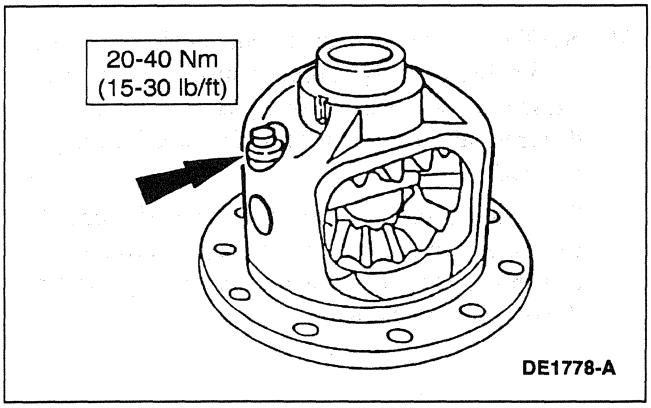

27. **NOTE:** If a new pinion shaft lock bolt is unavailable, coat the threads with Threadlock® and Sealer EOAZ-19554-AA or equivalent meeting Ford specifications WSK-M2G315-A5 and ESE-M4G204-A2 prior to installation.

    Install a new differential pinion shaft lock bolt and tighten it to specification.

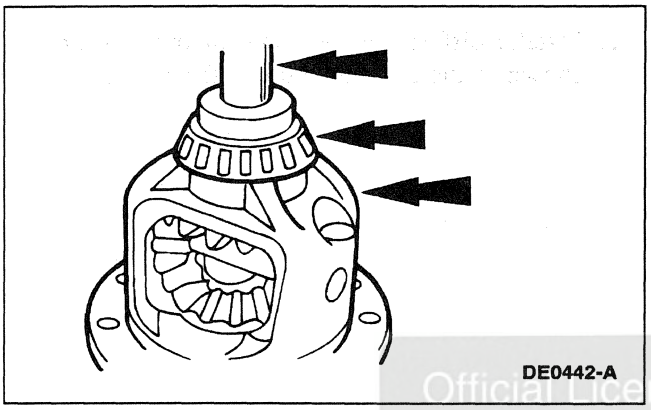

28. Use Differential Side Bearing Replacer to install the new differential bearings on the differential case.

Official Licensed Product
Ford Motor Company

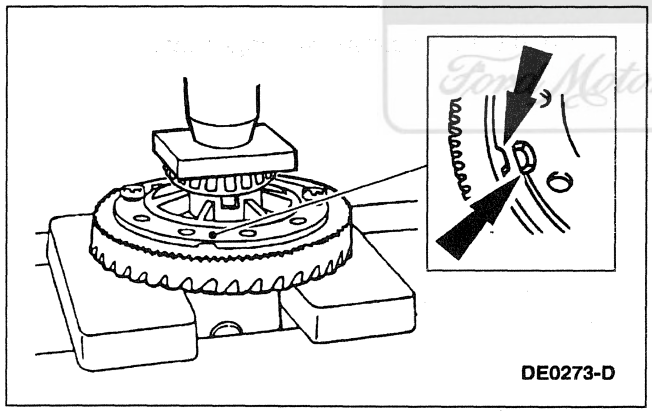

29. Press a new anti-lock speed sensor ring, if removed, and the ring gear on the differential case.
    - Align the notch on the differential case flange with the notch on the anti-lock speed sensor ring.

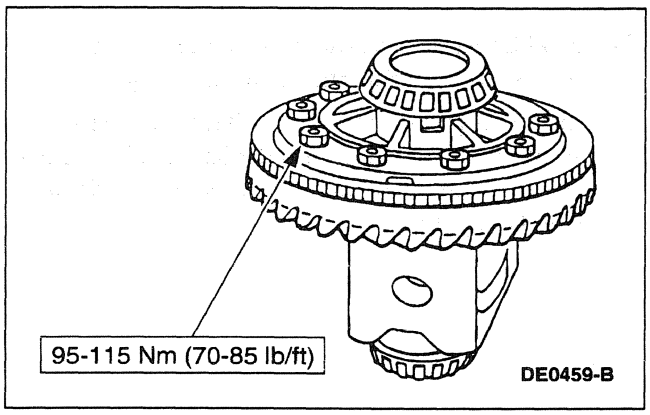

30. Install the ring gear bolts.
    - Apply Stud and Bearing Mount EOAZ-19554-BA or equivalent meeting Ford specification WSK-M2G349-A1 to ring gear bolts.

DISASSEMBLY AND ASSEMBLY (Continued)

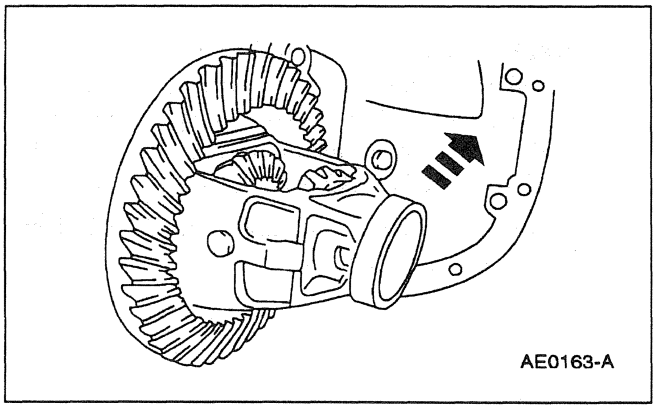

31. **NOTE:** If the ring gear runout check (performed before disassembly) exceeds specification, the cause may be a warped ring gear, a damaged differential case or loss of differential bearing preload.

    With the pinion removed, place the differential case/gear subassembly with the differential bearing and the rear axle pinion bearing cups in the rear axle housing.

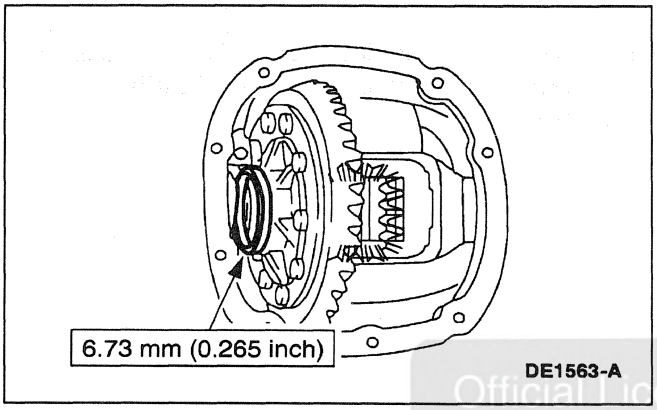

32. Install a differential bearing shim of the thickness shown on the LH side of the differential case.

Official Licensed Product
Ford Motor Company

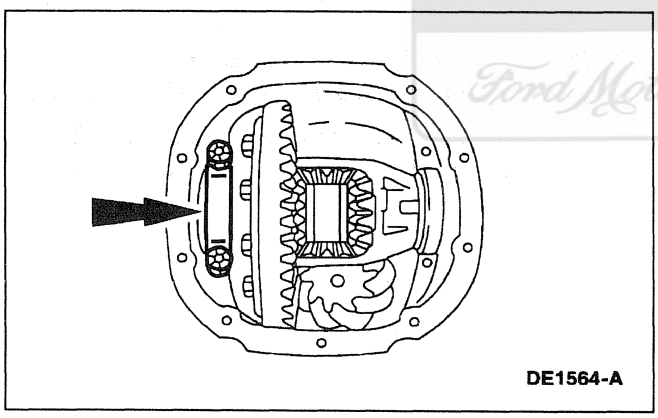

33. Install the LH bearing cap finger-tight.

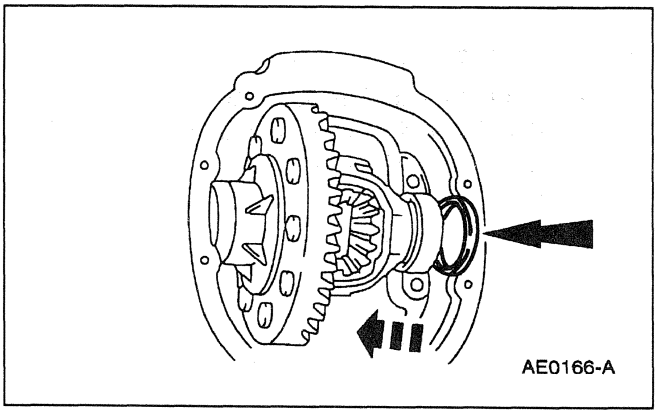

34. **NOTE:** Apply pressure toward the left side to fully seat the differential bearing cup (4222).

    Install progressively larger differential bearing shims on the RH side until the largest differential bearing shim selected can be assembled with a slight drag feel.

DISASSEMBLY AND ASSEMBLY (Continued)

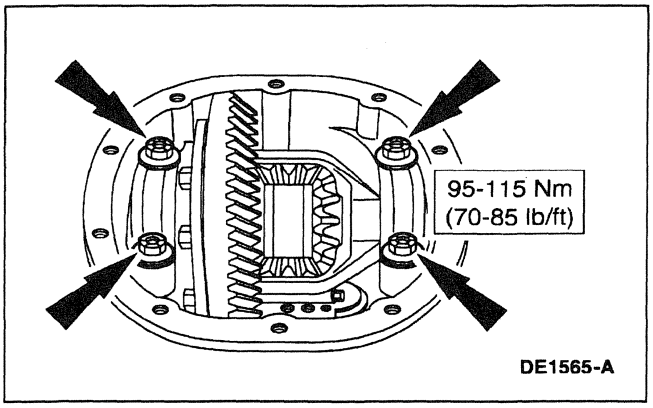

35. Install the RH bearing cap.
    - Tighten both bearing caps to specification.

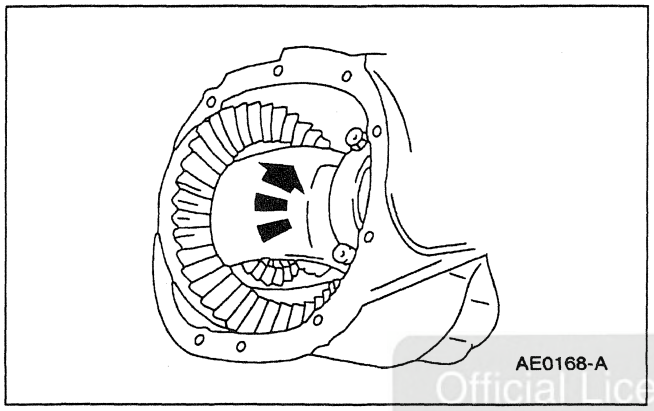

36. Rotate the differential assembly to make sure it rotates freely.

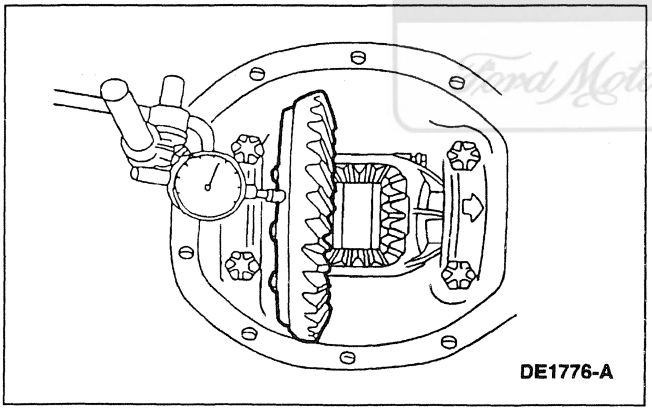

37. Install the Dial Indicator with Bracketry.
    - Check and note the ring gear runout.

38. If the runout is within specification, the original out-of-specification runout was caused by insufficient bearing preload.
    - If the runout exceeds specification, proceed to Step 9.

Official Licensed Product
Ford Motor Company

DISASSEMBLY AND ASSEMBLY (Continued)

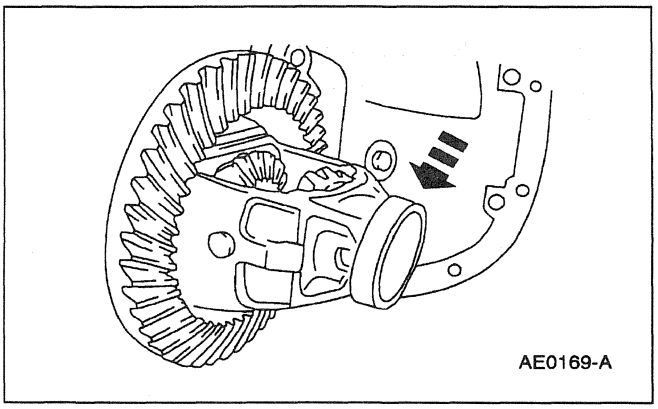

39. Remove the differential case.

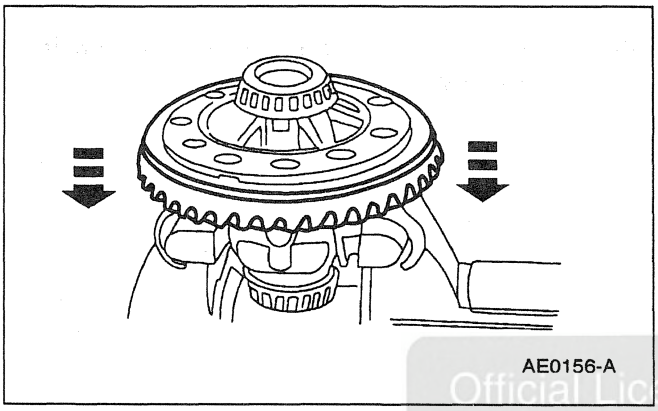

40. Remove the ring gear.

Official Licensed Product
Ford Motor Company

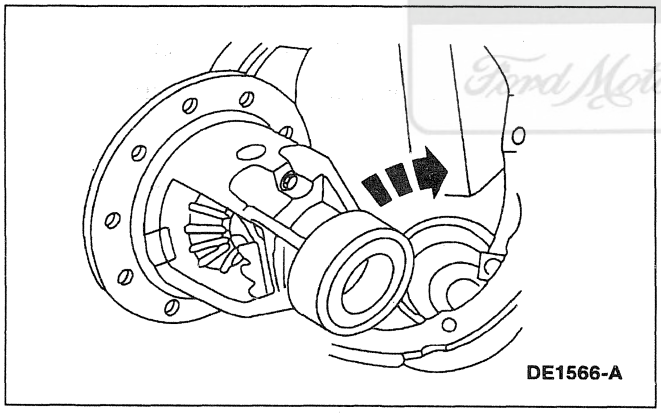

41. Install the differential case without the ring gear. Rotate the differential case to properly seat the differential bearings.

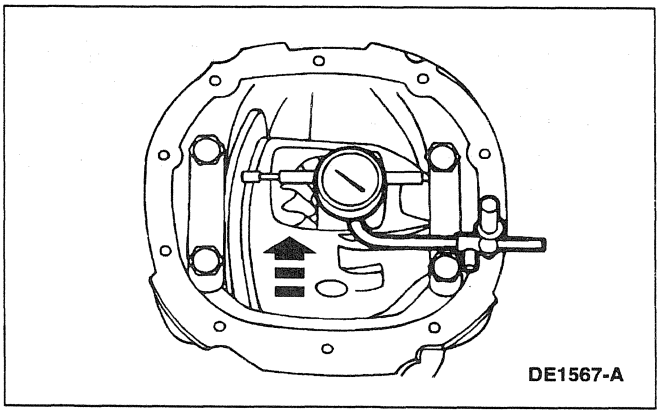

42. Check the differential case flange runout using the Dial Indicator with Bracketry.
    - If the runout is within specification, install a new ring gear and pinion. If the runout exceeds specification, the ring gear is true and the concern is due to either a damaged differential case or differential bearings.
    - Inspect the differential bearings. If the differential bearings are not damaged, replace both the differential case and the differential bearings.
    - Recheck the runout with the new differential case and differential bearings.

DISASSEMBLY AND ASSEMBLY (Continued)

Assembly

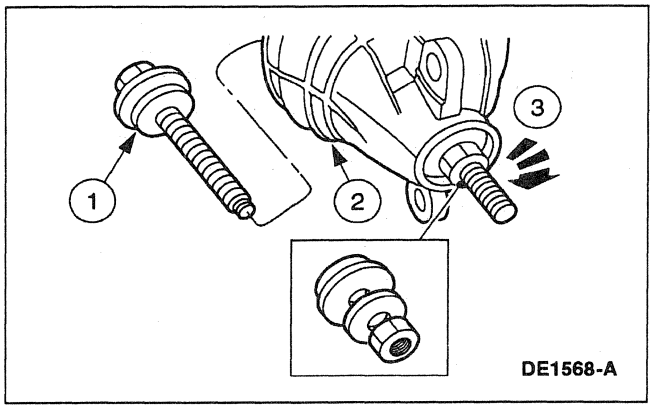

1. **NOTE:** Coat the new rear axle pinion bearing cup with engine oil.

   Install the pinion bearing cup.

   1 Position the rear axle pinion bearing cup on the Pinion Bearing Cup Replacer.

   2 Position the bearing cup replacer in the rear axle housing.

   3 Tighten the bearing cup replacer to fully seat the rear axle pinion bearing cup in the bore.

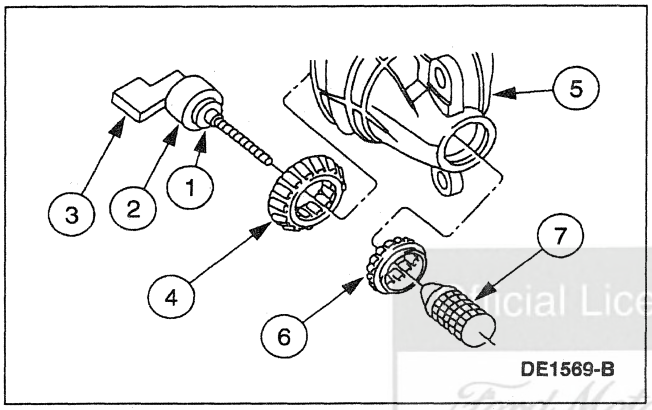

2. **NOTE:** A drive pinion bearing adjustment shim is used between the pinion bearing and the pinion head. The drive pinion bearing adjustment shim compensates for machining variations in the differential pinion and the pinion bearings. The correct drive pinion bearing adjustment shim size will locate the pinion for proper tooth contact with the ring gear. Selecting the correct drive pinion bearing adjustment shim can be done using a pinion depth gauge set.

   NOTE: Apply a light film of SAE 80W-90 Premium Rear Axle Lubricant XY-80W90-QL or equivalent meeting Ford specification WSP-M2C197-A on the front differential pinion bearing and the rear differential pinion bearing assemblies.

   Install the Pinion Depth Gauge.

   1 Place the Aligning Adapter on the Screw.

   2 Place the Gauge Disc onto the Screw.

   3 Thread the Gauge Block onto the Screw.

   4 Place the rear pinion bearing onto the aligning adapter.

   5 Install the bearing and tool in the rear axle housing.

   6 Place the front pinion bearing onto the screw.

Official Licensed Product
Ford Motor Company

DISASSEMBLY AND ASSEMBLY (Continued)

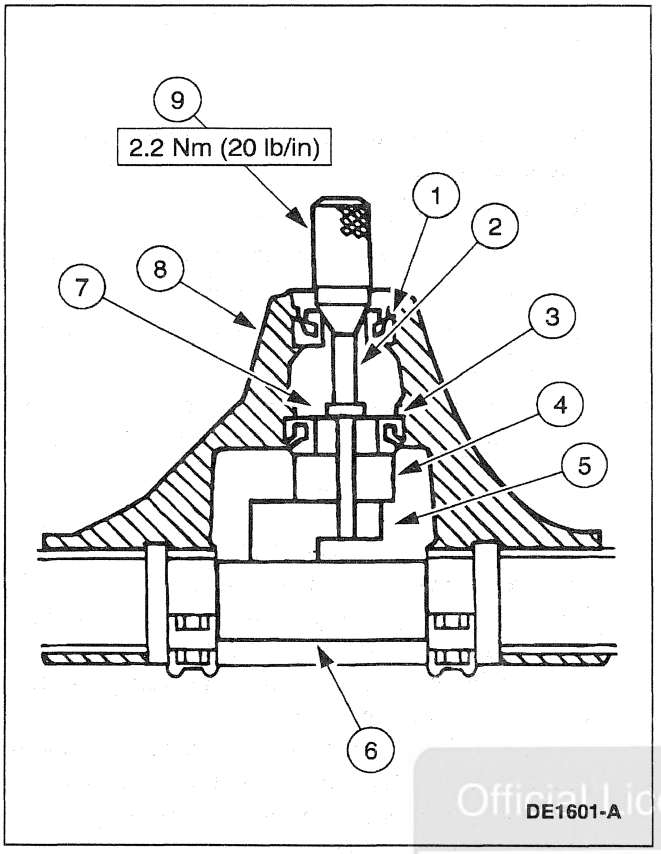

3. Thread the Driver Handle onto the Screw and tighten to the specification shown.

Item	Part Number	Description
1	4621	Pinion Bearing (Outer)
2	T76P-4020-A9	Screw
3	4630	Pinion Bearing (Inner)
4	T79P-4020-A8	Gauge Disc (1.884 Inch Thick)
5	T76P-4020-A10	Gauge Block (1.700 Inch Thick)
6	T93P-4020-A	Gauge Tube (3.0630 Inch OD)
7	T76P-4020-A3	Aligning Adapter (1.612 Inch OD)
8	4010	Rear Axle Housing
9	T76P-4020-A11	Driver Handle

Official Licensed Product
Ford Motor Company

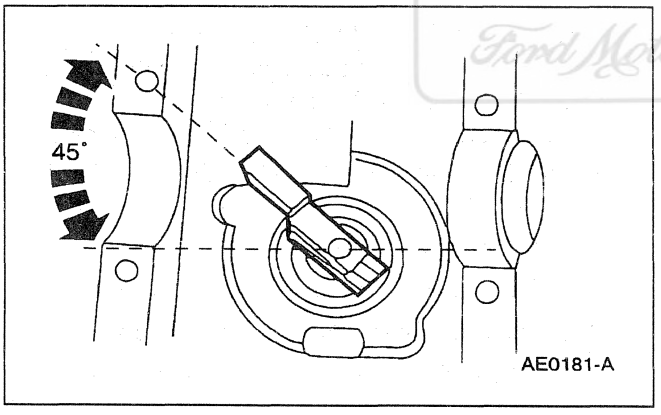

4. **NOTE:** The Gauge Block must be offset to obtain an accurate reading.

   NOTE: Rotate the Gauge Block several half turns to properly seat the pinion bearings.

   Position the Gauge Block 45 degrees across the Gauge Tube.

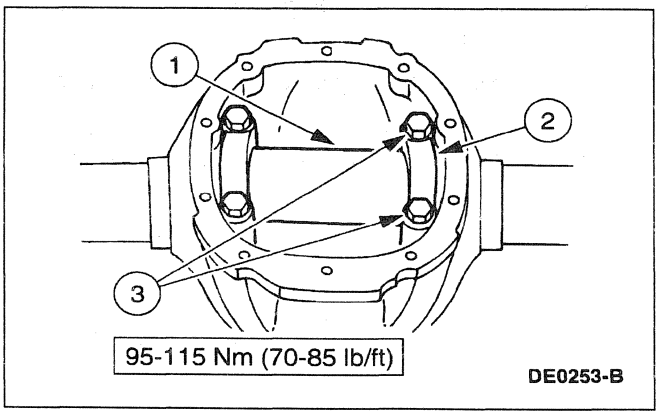

5. Install the Gauge Tube.
   1. Position the Gauge Tube on the differential bearing seat of the rear axle housing.
   2. Install the differential bearing caps.
   3. Install the differential bearing cap bolts and tighten to specification.

DISASSEMBLY AND ASSEMBLY (Continued)

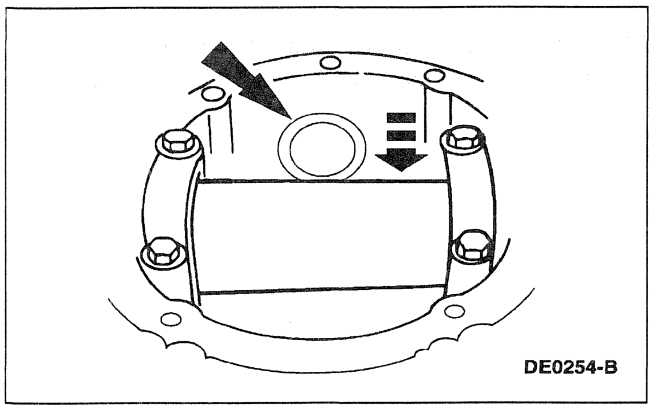

6. **NOTE:** A slight drag should be felt for the correct shim selection.

   Select and check the correct shim size.

7. Remove the Pinion Depth Gauge set and the pinion bearings.

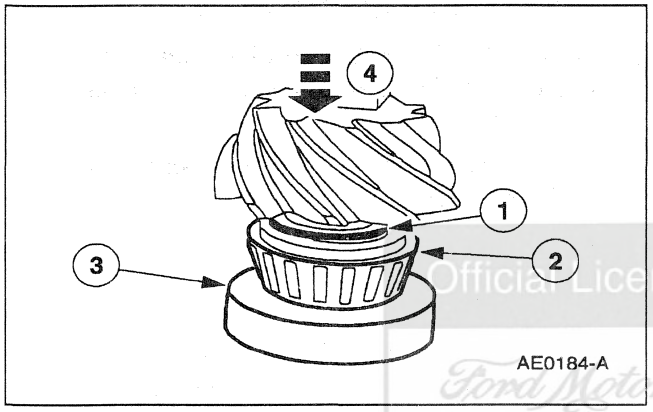

8. **NOTE:** The same pinion bearings and drive pinion bearing adjustment shim used in the drive pinion shim selection procedure must be used in the final axle assembly.

   Install the rear pinion bearing.

   1 Position the drive pinion bearing adjustment shim on the pinion stem.
   2 Position the pinion bearing on the pinion stem.
   3 Position the Pinion Bearing Cone Replacer on the pinion stem.
   4 Using a press, firmly seat the drive pinion bearing adjustment shim and pinion bearing on the pinion stem.

9. Install the front pinion bearing, the rear axle drive pinion shaft oil slinger and the rear axle drive pinion seal.

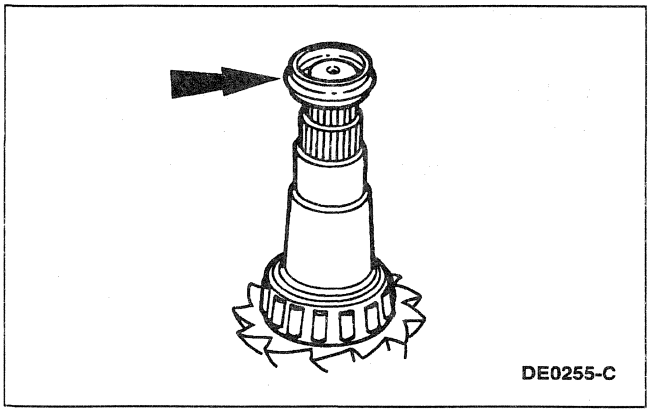

10. **NOTE:** Make sure the splines on the pinion stem are free of burrs. If burrs are evident, remove using a fine crocus cloth, work in a rotational motion.

    Place a new drive pinion collapsible spacer on the pinion stem against the pinion stem shoulder.

Official Licensed Product Ford Motor Company

DISASSEMBLY AND ASSEMBLY (Continued)

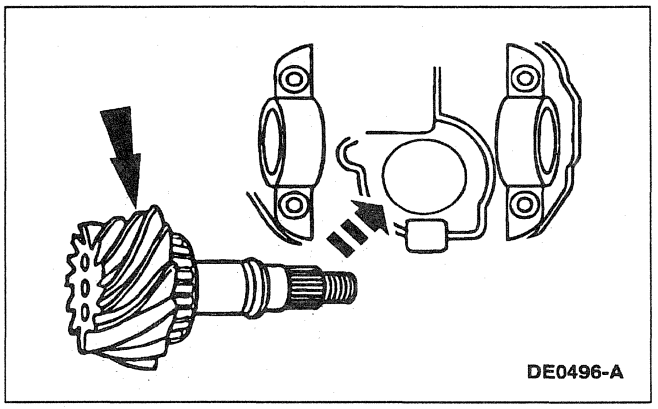
DE0496-A

11. Install the drive pinion and drive pinion collapsible spacer into the rear axle housing.

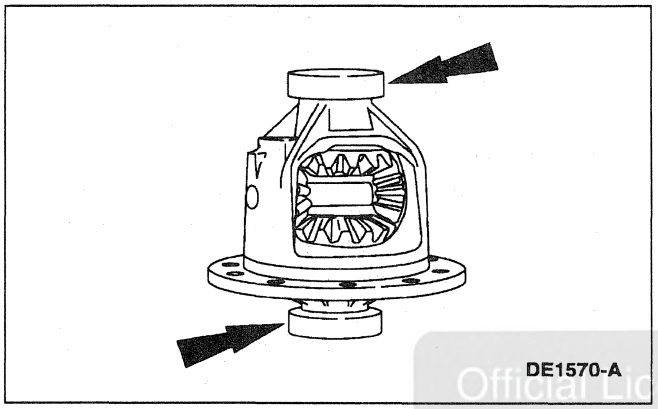
DE1570-A

12. **CAUTION: Take extreme care not to damage aluminum rear axle housing while performing these procedures.**

    CAUTION: Dummy bearings are marked LH and RH and must be installed as shown.

    Install the (RH) and (LH) dummy bearings on the differential case.

Official Licensed Product
Ford Motor Company

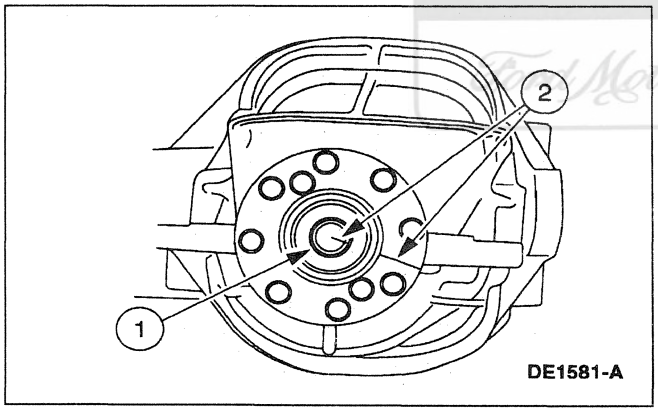

DE1581-A

13. Install the rear axle companion flange.
    1. Lubricate the rear axle companion flange splines.
       - Use thermally stable Rear Axle Lubricant XY-80W90-QL or equivalent meeting Ford specification WSP-M2C197-A.
    2. **NOTE:** Disregard the scribe marks if a new rear axle companion flange is being installed.

       Align the rear axle companion flange with the drive pinion shaft.

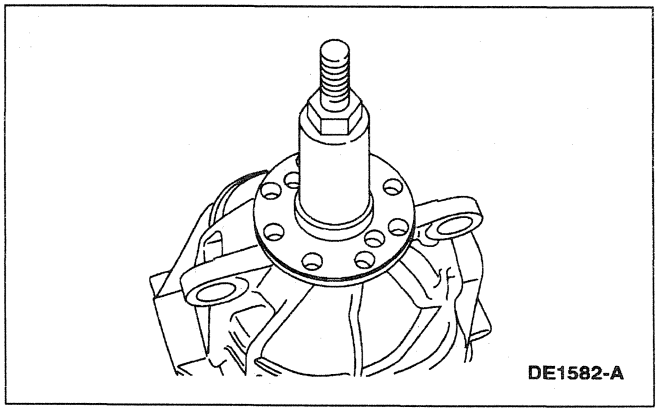
DE1582-A

14. With the drive pinion in place in the rear axle housing, install the rear axle companion flange using the Companion Flange Replacer.

DISASSEMBLY AND ASSEMBLY (Continued)

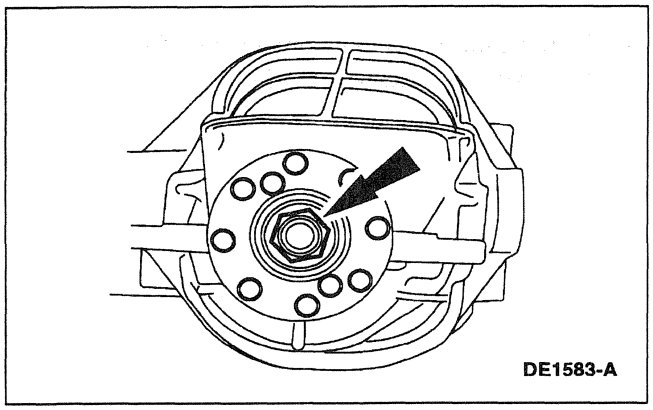
DE1583-A

15. Position the new pinion nut and tighten it to the pinion bearing preload specification for new pinion bearings.

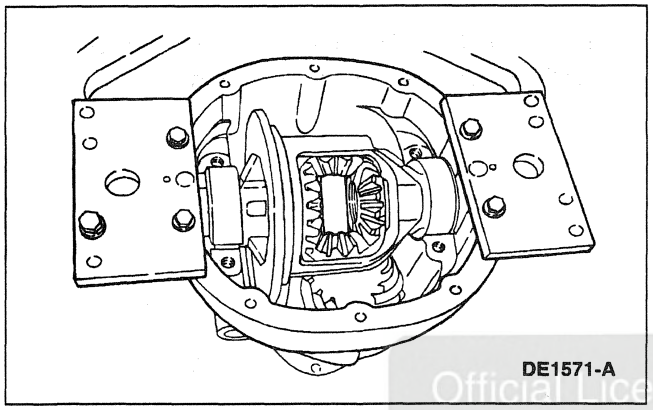
DE1571-A

16. Place the differential case and the dummy bearings into the rear axle housing.

Official Licensed Product
Ford Motor Company

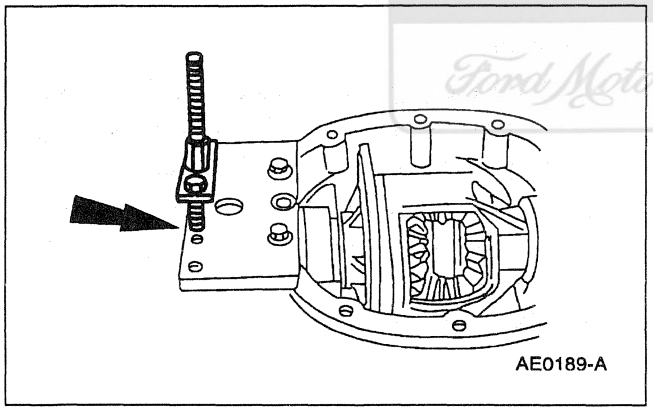
AE0189-A

17. Position the Dial Indicator Bracketry on the outside mounting hole.

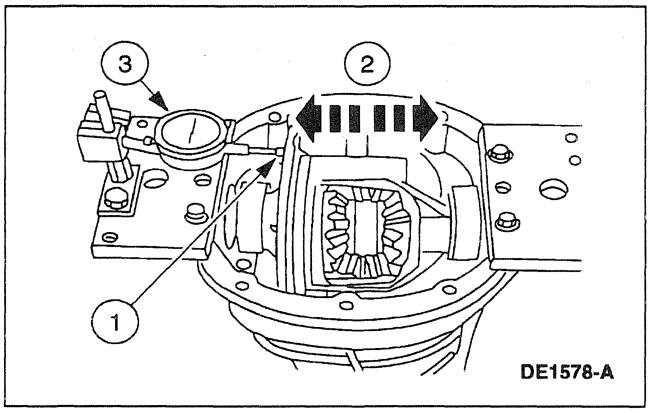

DE1578-A

18. **NOTE:** Repeat this step until a consistent reading is obtained.

    Measure the total end play.

    1 Attach the Dial Indicator with the indicator tip positioned on the machined surface of the differential case flange.

    2 Move the differential case to the left and the right (as far as possible).

    3 Record the reading on the differential bearing shim selection procedure line A.

DISASSEMBLY AND ASSEMBLY (Continued)

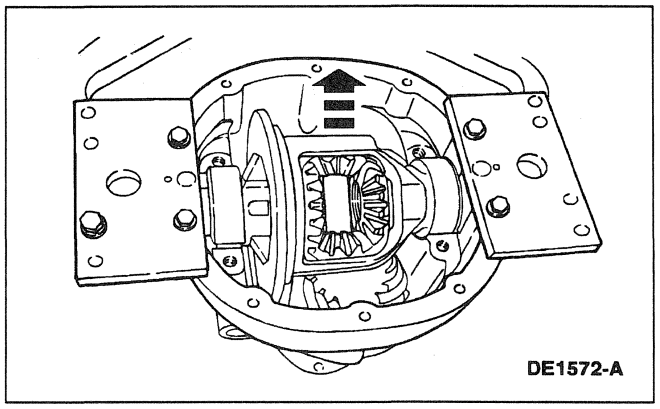

19. Remove the Dial Indicator and the differential case from the rear axle housing.

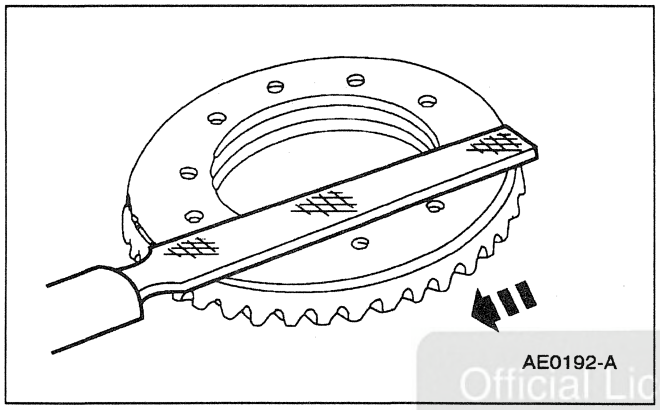

20. Draw-file the differential ring gear mounting surface to remove any nicks or burrs.

Official Licensed Product
Ford Motor Company

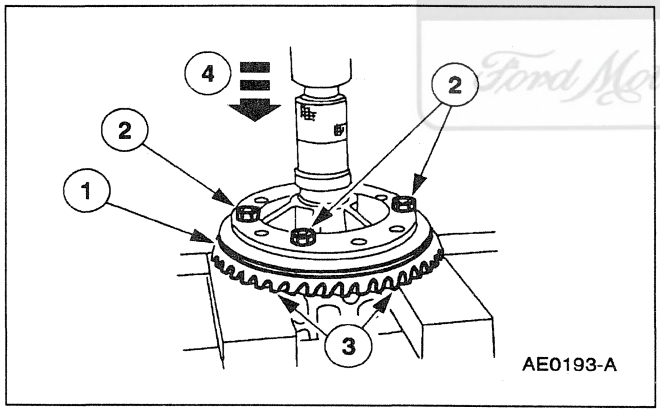

21. Install the ring gear.
    1. Place the ring gear onto the differential case.
    2. Hand start three bolts to align the holes in the ring gear and the differential case.
    3. Place the differential case and ring gear onto the press bed blocks with the ring gear teeth facing down.
    4. Press the ring gear into place.

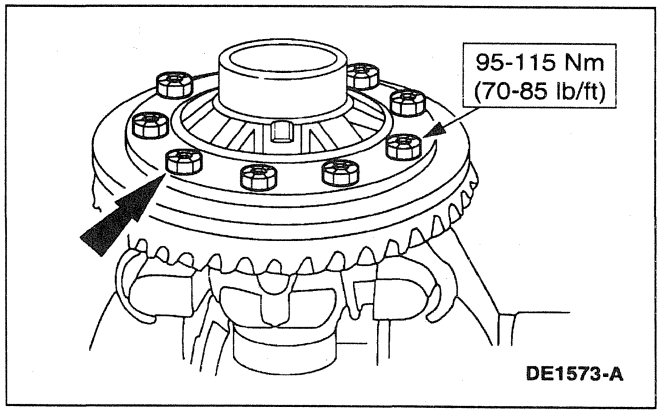

22. Install the remaining ring gear bolts and tighten to specification.

DISASSEMBLY AND ASSEMBLY (Continued)

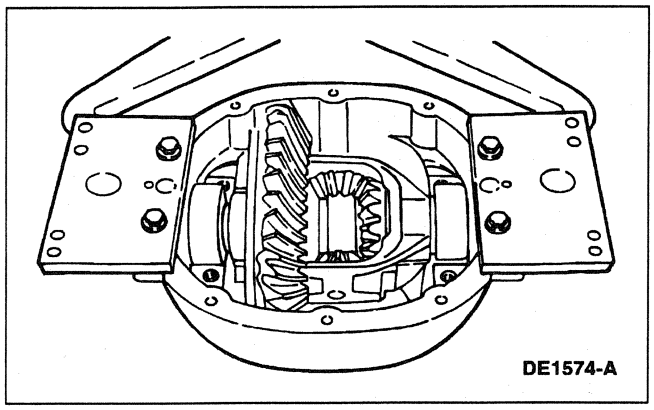

23. Place the differential case, dummy bearings and the ring gear into the rear axle housing.

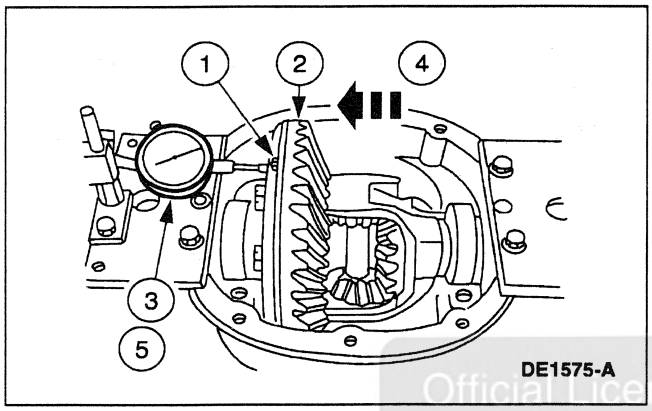

24. **NOTE:** The ring gear bolt heads may interfere with this procedure inside the rear axle housing. If so, remove two or three bolts to provide clearance.

    Measure the end play.

    1 Attach the Dial Indicator with the indicator tip positioned on the machined surface of the differential case flange.

    2 Rock the ring gear to allow full mesh with the pinion gear.

    3 With the gears in full mesh, set the Dial Indicator to zero.

    4 Move the differential case as far as possible to the left and note the reading.

    5 Record the reading on the differential bearing shim selection procedure line B.

Official Licensed Product
Ford Motor Company

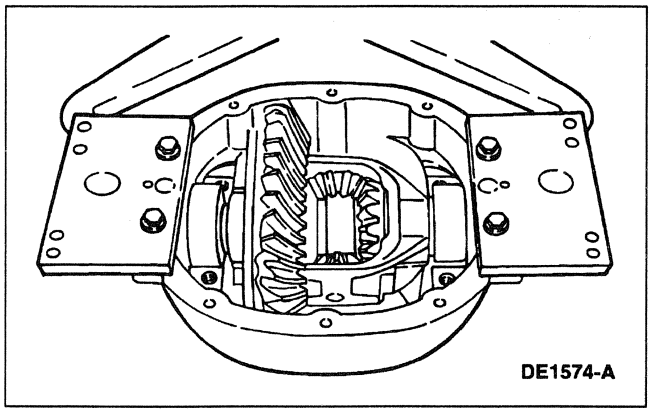

25. Remove the Dial Indicator and the differential case from the rear axle housing.

DISASSEMBLY AND ASSEMBLY (Continued)

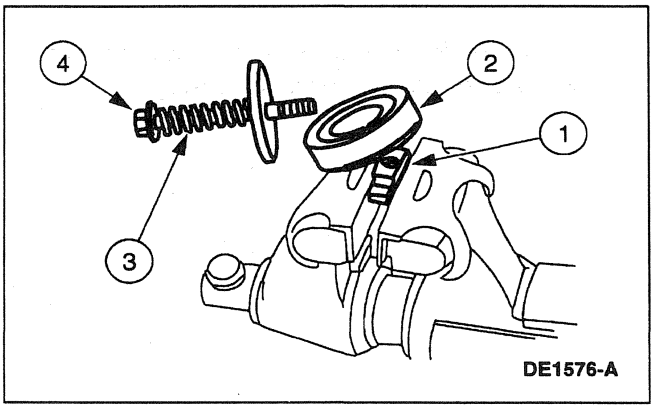

26. **NOTE:** The stand height of both differential bearings must be measured prior to installation.

    Install the Bearing Preload Tool.

    1 Place the bearing preload tool base in a soft-jawed vise with the bearing mounting surface above the vise jaws.
    2 Position the differential bearing on the bearing preload tool base.
    3 Attach the bolt, spring, washers and spacer.
    4 Tighten the bolt.

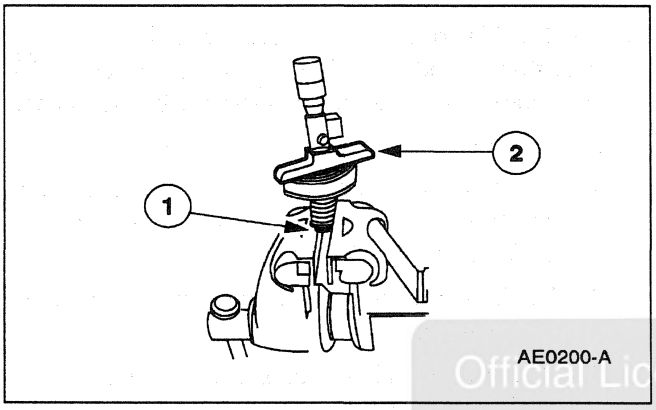

27. **NOTE:** Mark the differential bearings left and right before measuring.

    Measure the differential bearing stand height.

    1 Invert the Bearing Preload Tool and clamp the bolt head in a vise.
    2 Position a depth micrometer flat on the differential bearing.

Official Licensed Product
Ford Motor Company

28. Measure the bearing stand height and record on the differential bearing shim selection procedure line D.

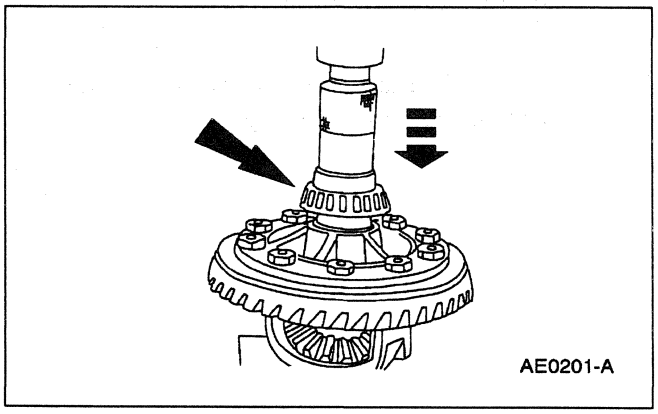

29. Press the left and right differential bearing on the differential case.

DISASSEMBLY AND ASSEMBLY (Continued)

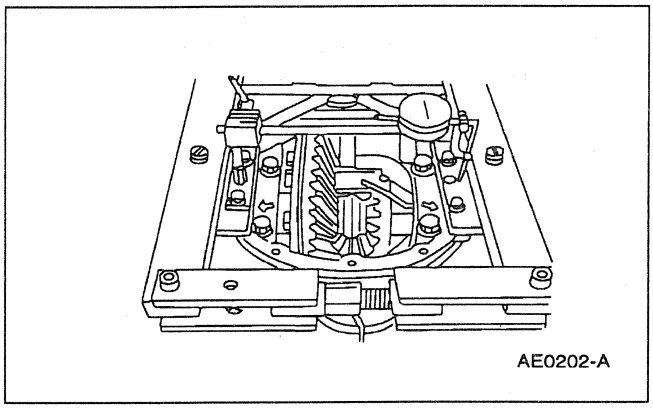

30. Install the Differential Housing Spreader, Dial Indicator and the Dial Indicator Bracketry.

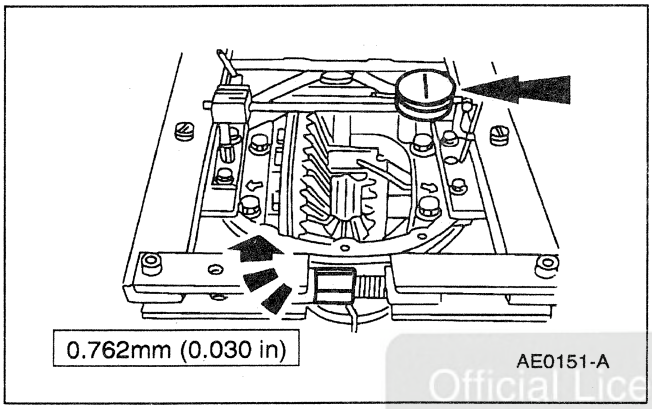

31. ⚠ **CAUTION: Overspreading may damage the rear axle housing.**

    Tighten the differential housing spreader screw to spread the rear axle housing.

Official Licensed Product
Ford Motor Company

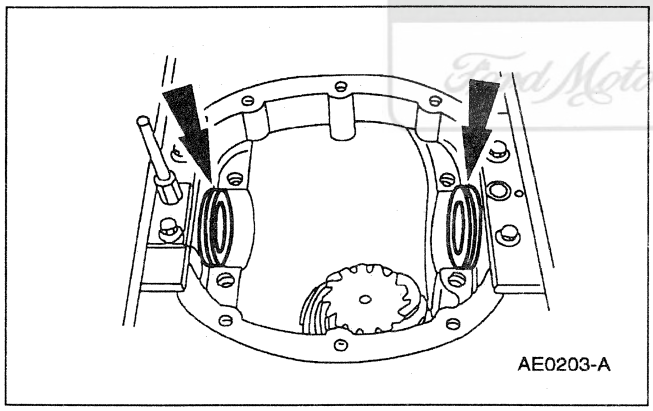

32. **NOTE:** Apply a light coating of Premium Long-Life Grease XG-1-C, or equivalent meeting Ford specification ESA-M1C75-B to the differential bearing shim to help hold in place.

    NOTE: Select the proper size differential bearing shim by using the differential bearing shim selection procedure.

    Install the differential bearing shims.

    - Place the differential bearing shims in the rear axle housing.

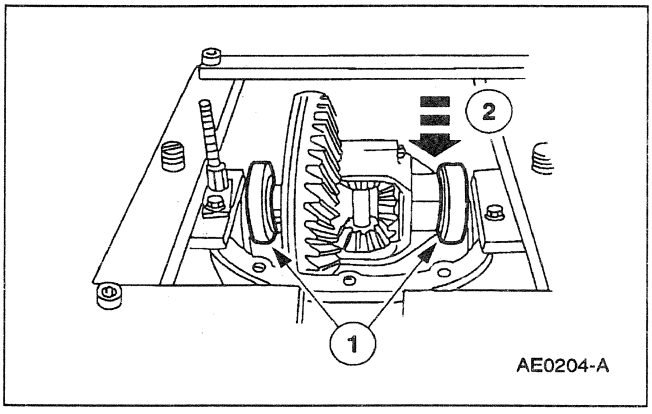

33. Install the differential case.
    1. Position the differential bearing cups on the differential bearings.
    2. Lower the differential case in place between the differential bearing shims.

DISASSEMBLY AND ASSEMBLY (Continued)

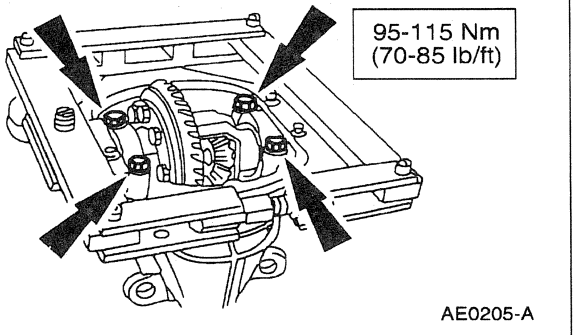

AE0205-A

34. **NOTE:** Tighten the bearing cap bolts prior to releasing the housing spreader.

    Install the bearing caps in their original positions and tighten the bolts to specification.

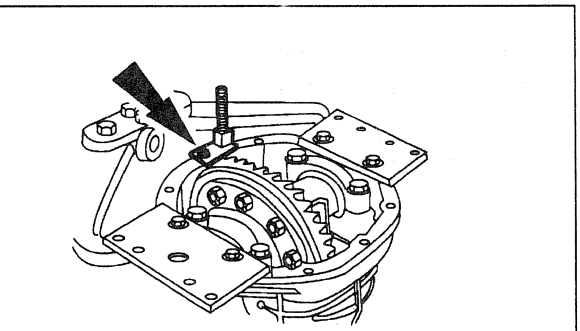
AE0206-A

35. Remove the Differential Housing Spreader and move the dial indicator base to the 12 o'clock position.

Official Licensed Product
Ford Motor Company®

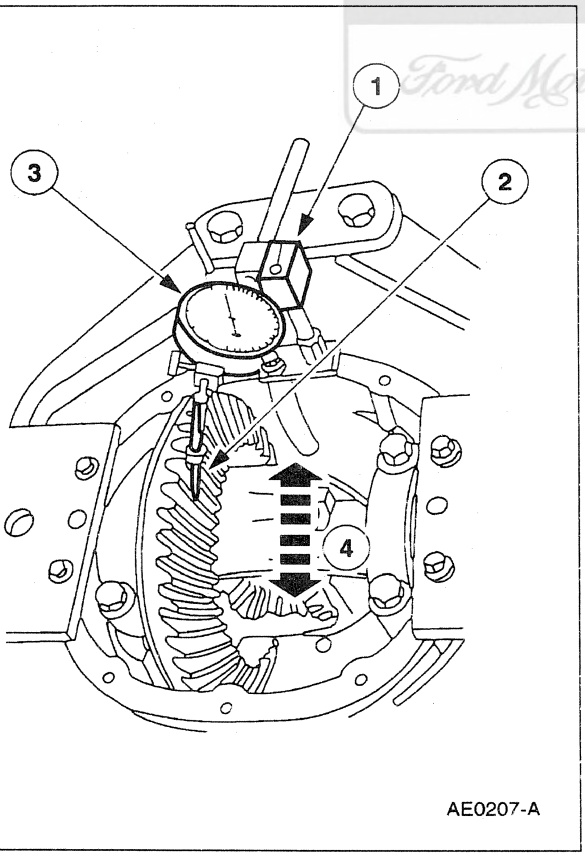

AE0207-A

36. **NOTE:** Measure the ring gear backlash at four places to obtain a consistent reading.

    Measure the backlash.

    1 Attach the Dial Indicator with Bracketry.

    2 Position the indicator needle centrally on a drive tooth.

    3 Zero the indicator.

    4 Turn the ring gear without turning the pinion gear. Record the indicator reading.

DISASSEMBLY AND ASSEMBLY (Continued)

37. If the backlash is within specification, install the axle housing cover.
    - Refill the rear axle (4001); refer to Companion Flange and Pinion Seal in this section.
    - Install the rear axle; refer to Rear Axle Assembly in this section.

38. If the backlash is not to specification, correct by increasing the thickness of one differential bearing shim and decreasing the thickness of the other differential bearing shim by the same amount; refer to the following tables.

Backlash Change Required		Thickness Change Required	
mm	Inch	mm	Inch
0.025	0.001	0.050	0.002
0.050	0.002	0.050	0.002
0.076	0.003	0.101	0.004
0.101	0.004	0.152	0.006
0.127	0.005	0.152	0.006
0.152	0.006	0.203	0.008
0.177	0.007	0.254	0.010
0.203	0.008	0.254	0.010
0.228	0.009	0.304	0.012
0.254	0.010	0.355	0.014
0.279	0.011	0.355	0.014
0.304	0.012	0.406	0.016
0.330	0.013	0.457	0.018
0.335	0.014	0.457	0.018
0.381	0.015	0.508	0.020

Official Licensed Product
Ford Motor Company

Differential Shim Size Chart

Numbers of Stripes and Color Code	Dimension A	
	mm	Inch
2—C-COAL	7.7978-7.8105	0.3070-0.3075
1—C-COAL	7.7470-7.7597	0.3050-0.3055
5—BLU	7.6962-7.7089	0.3030-0.3035
4—BLU	7.6454-7.6581	0.3010-0.3015
3—BLU	7.5946-7.6073	0.2990-0.2995
2—BLU	7.5458-7.5565	0.2970-0.2975
5—PINK	7.4422-7.4549	0.2930-0.2935
4—PINK	7.3914-7.4041	0.2910-0.2915
3—PINK	7.3406-7.3533	0.2890-0.2895
2—PINK	7.2898-7.3025	0.2870-0.2875
1—PINK	7.2390-7.2517	0.2850-0.2855
5—GRN	7.1882-7.2009	0.2830-0.2835
4—GRN	7.1374-7.1501	0.2810-0.2815
3—GRN	7.0866-7.0993	0.2790-0.2795

(Continued)

DISASSEMBLY AND ASSEMBLY (Continued)

Differential Shim Size Chart

Numbers of Stripes and Color Code	Dimension A	
	mm	Inch
2—GRN	7.0358-7.0485	0.2770-0.2775
1—GRN	6.9850-7.0485	0.2750-0.2755
5—WH	6.9342-6.9469	0.2730-0.2735
4—WH	6.8834-6.8961	0.2710-0.2715
3—WH	6.8326-6.8453	0.2690-0.2695
2—WH	6.7818-6.7945	0.2670-0.2675
1—WH	6.7310-6.7437	0.2650-0.2655
5—YEL	6.6802-6.6929	0.2630-0.2635
4—YEL	6.6294-6.6421	0.2610-0.2615
3—YEL	6.5786-6.5913	0.2590-0.2595
2—YEL	6.5278-6.5405	0.2570-0.2575
1—YEL	6.4770-6.4897	0.2550-0.2555
5—ORNG	6.4262-6.4389	0.2530-0.2535
4—ORNG	6.3754-6.3881	0.2510-0.2515
3—ORNG	6.3246-6.3373	0.2490-0.2495
2—ORNG	6.2738-6.2865	0.2470-0.2475
1—ORNG	6.2223-6.2357	0.2450-0.2455
2—RED	6.1722-6.1849	0.2430-0.2435
1—RED	6.1214-6.1341	0.2410-0.2415

Differential Bearing Shim Selection Procedure

8.8-Inch Aluminum Axle	Actual	Example
Line-A—End play without ring gear NOTE: If questionable reading is found, check for interface from ring gear bolt heads and differential housing casting. Remove ring gear bolts as required to eliminate interference.		0.498
Line-B—End play with ring gear (ring gear side)	—	- 0.245
Line-C—Subtract Line-B from Line-A, also record on Line C, below		0.253

8.8-Inch Aluminum Axle	Left Differential Bearing Height		Right Differential Bearing Height	
	Actual	Example	Actual	Example
Master Bearing Height	0.8695	0.8695	0.8695	0.8695
Line-D Actual Bearing Height	-	-0.8478	-	-0.8491
Line-E Difference		0.0217		0.0204

DISASSEMBLY AND ASSEMBLY (Continued)

Differential Bearing Shim Requirements

8.8-Inch Aluminum Axle	Left Side		8.8-Inch Aluminum Axle	Right Side	
	Actual	Example		Actual	Example
Line-B End Play Line-E Bearing Height	+ 	0.2450 +0.0217	Line-C End Play Line-E Bearing Height	+ 	0.2530 +0.0204
TOTAL Lines B and E Backlash (Subtract)	 -0.006	0.2667 -0.0060	TOTAL Lines C and E Backlash/Preload (Add)	 +0.0200	0.2734 +0.0200
Initial Thickness [a]		0.2607	Initial Thickness		0.2934
Final Shim Thickness-Left		0.261	**Final Shim Thickness-Right**		0.293

a NOTE: Round off initial thickness to the nearest shim thickness as in example for final shim thickness.

SPECIFICATIONS

General Specifications

Description	mm	Inches
Clearance, Tolerance and Adjustments		
Maximum Runout of Backface of Ring Gear	0.0762	0.004
Maximum Differential Case Runout	0.076	0.003
Nominal Pinion Drive Pinion Bearing Adjustment Shim	0.762	0.030
Maximum Carrier Spread	0.762	0.030
Backlash Between Ring Gear and Pinion Teeth	0.203-0.330	0.008-0.013
Preferred Backlash	0.254	0.010
Maximum Backlash Variation Between Teeth	0.1016	0.004
Maximum Radial Runout of Rear Axle Companion Flange in Assembly	0.25 TIR	0.010 TIR
Available Drive Pinion Bearing Adjustment Shim in Steps of: 0.0254mm (0.001 inch) 8.8-inch axle	0.254-0.965	0.010-0.038
Lubricant Deflector to Axle Housing Cover	5.08-6.35	0.200-0.250

Lubricant Capacities

Liters	Pints
1.4	3.0[1]

1 Use Premium Rear Axle Lubricant XY-80W90-QL or equivalent meeting Ford specification WSP-M2C197-A. Fill the rear axle 6.35 mm (1/4 inch) from the bottom of filler hole.

General Specifications

Item	Specification
Lubricants	
Premium Long Life Grease XG-1-C	ESA-M1C75-B
SAE 80W-90 Premium Rear Axle Lubricant XY-80W90-QL	WSP-M2C197-A
Silicone Rubber D6AZ-19562-AA	ESB-M4G92-A ESE-M4G195-A
Stud and Bearing Mount EOAZ-19554-BA	WSK-M2G349-A1
Pipe Sealant with Teflon® D8AZ-19554-A	WSK-M2G350-A2

Official Licensed Product
Ford Motor Company

SPECIFICATIONS (Continued)

Torque Specifications

Description	Nm	Lb/Ft
Rear Axle Wheel Hub Retainer	340	251
Bearing Cap Bolt	95-115	70-85
Differential Pinion Shaft Lock Bolt	20-40	15-30
Ring Gear Bolt[a]	95-115	70-85
Rear Axle Housing Cover Retaining Bolt	27-37	20-27
Filter Plug	28-40	20-30
Rear Differential Front Lower Insulator Nut	92-136	68-100
Rear Axle Differential Front Lower Insulator to Cover Bolts	108-136	80-100
Rear Axle Differential Rear Insulator Nut	108-136	80-100
Rear Differential Mount to Crossmember Bolt and Nut	165-211	122-155
Driveshaft to Rear Axle Companion Flange Bolt	95-130	70-95
Lower Rear Suspension Arm and Bushing Bolt	128-178	94-131

(Continued)

Torque Specifications

Description	Nm	Lb/Ft
Rear Suspension Arm and Bushing Bolt	158-193	117-142
Brake Rear Disc Caliper Locating Pin	87-119	64-88
Rear Brake Anti-Lock Sensor Bolt	19-27	14-20
Lug Nuts	115-142	85-105
Pinion Nut	190	140

a Use Stud and Bearing Mount EOAZ-19554-BA or equivalent meeting Ford specification WSK-M2G349-A1.

Torque Specifications

Description	Nm	Lb/In
Pinion Bearing Preload — (Drive Pinion Collapsible Spacer) Used Bearings[a]	0.9-1.16	8-14
New Bearings	1.8-3.2	16-29
Differential Bearing Preload	3	27

a With pinion flange yoke seal.

Official Licensed Product
Ford Motor Company

SECTION 205-05 Rear Drive Halfshafts

VEHICLE APPLICATION: Mark VIII

SUBJECT	PAGE
DESCRIPTION AND OPERATION	
Rear Drive Halfshafts	205-05-2
DIAGNOSIS AND TESTING	
Rear Drive Halfshafts	205-05-4
REMOVAL AND INSTALLATION	
Halfshaft	205-05-5
DISASSEMBLY AND ASSEMBLY	
Halfshaft Joint	205-05-7
SPECIFICATIONS	205-05-13

Official Licensed Product
Ford Motor Company

DESCRIPTION AND OPERATION

Rear Drive Halfshafts

The rear wheel drive halfshaft system consists of the following features and operations:

- Constant velocity (CV) joints at both inboard (differential) and outboard (wheel) ends provide operating smoothness.
- CV joints are connected by an interconnecting shaft that is splined at both ends and retained in the inboard and outboard CV joints by driveshaft bearing retainer circlips (3Z498).
- The inboard cv joint stub shaft pilot bearing housing (4B413) is splined and held in the differential side gear (4236) by a driveshaft bearing retainer circlip.
- The outboard rear wheel driveshaft and joint are pressed into the rear hub (1109) and secured with a rear axle wheel hub retainer (4B477).
- The CV joints are lubed-for-life with a special CV joint grease and require no periodic lubrication.
- The rear axle shaft outer boot (4A331) / rear axle shaft inner boot (4L537) , should be inspected periodically and replaced immediately when damage or grease leakage is evident. Continued operation can result in CV joint wear and noise due to contamination or loss of the CV joint grease.
- Removal of the halfshaft from the differential is accomplished by applying a load to the back face of the inboard CV joint assembly to overcome the driveshaft bearing retainer circlip.
- The outboard joint end must be pressed from the rear hub.
- The inboard tripod CV joints can be disassembled and serviced.
- Other than the rear axle shaft outer boot, the outboard CV joint is serviced only as an assembly with the shaft.
- The halfshaft transmits engine torque from the rear axle housing (4010) to the rear wheels.
- CV joints are capable of operating at varying angles and must provide a means of shaft length changes to allow for vertical suspension (wheel) and engine dynamic movement. These requirements are satisfied by using CV joints at the inboard (differential) end and outboard (wheel) end of the halfshaft.
- A CV joint is a mechanism for transmitting uniform torque and rotary motion while operating through its angle range.
- The halfshaft inner joints are plunge-type joints that provide for the required axial movement to affect shaft length changes.
- The outboard CV joint has a higher angle capability than the inboard CV joint to accommodate suspension travel.
- The CV joints and halfshaft assemblies rotate at approximately one-third the speed of the driveshaft (4602) and do not contribute to rotational vibration disturbances.

Special License Ford Motor Company

DESCRIPTION AND OPERATION (Continued)

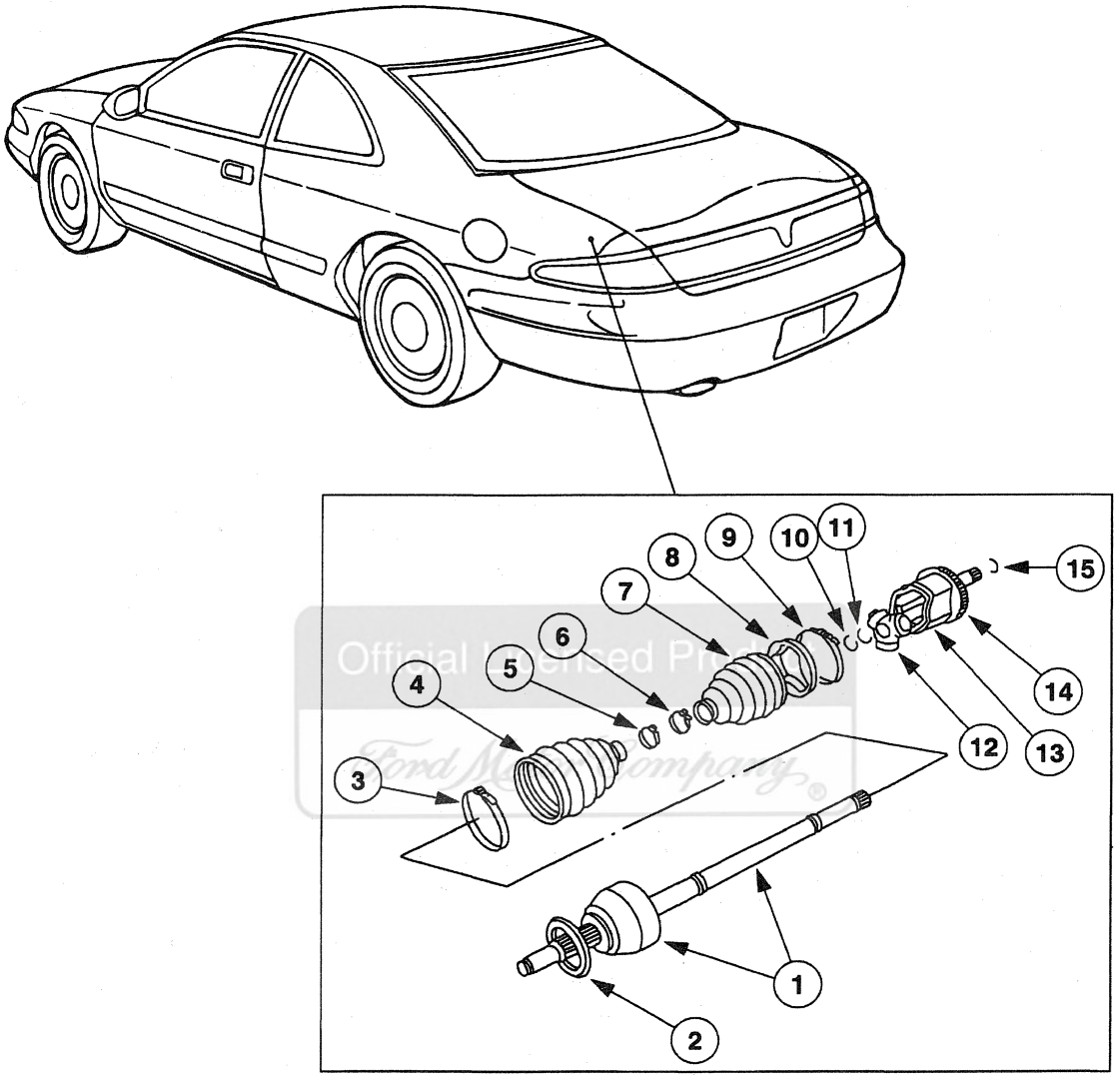

Item	Part Number	Description
1	4B436	Rear Wheel Driveshaft and Joint
2	3K070	Dust Shield
3	4B478	Boot Clamp (Large Outboard)
4	4A331	Rear Axle Shaft Outer Boot
5	4B478	Boot Clamp (Small Outboard)
6	4B478	Boot Clamp (Small Inboard)
7	4L537	Rear Axle Shaft Inner Boot

(Continued)

Item	Part Number	Description
8	—	Trilobe Insert (Part of 4K326)
9	4B478	Boot Clamp (Large Inboard)
10	4K184	Rear Axle Shaft Joint Assembly Retaining Ring
11	3Z498	Driveshaft Bearing Retainer Circlip
12	—	Tripod Assy (Part of 4K326)

(Continued)

DESCRIPTION AND OPERATION (Continued)

Item	Part Number	Description
13	4B413	Inboard Cv Joint Stub Shaft Pilot Bearing Housing
14	2C189	Rear Brake Anti-Lock Sensor Indicator
15	3Z498	Driveshaft Bearing Retainer Circlip

(Continued)

Halfshaft Handling

CAUTION: Never hold the CV joint and halfshaft assembly by the rear axle shaft inner joint (4K326) or outboard joint only.

Handle all rear drive halfshaft components carefully during halfshaft removal and installation and during various component disassembly and assembly procedures.

- Do not remove the rear axle shaft inner joint by pulling on the interconnecting shaft.
- Handle the complete halfshaft by the interconnecting shaft to avoid pull-apart and potential damage to the rear axle shaft inner joint.
- Do not over-angle the CV joints beyond their capacity.
- Make sure machined surfaces and splines are not damaged.
- Do not allow the rear axle shaft outer boots or rear axle shaft inner boots to come into contact with sharp edges or hot exhaust components.
- Do not drop assembled halfshafts. The impact will cut the rear axle shaft outer boots from the inside without external evidence of damage.
- Never use the halfshaft assembly as a lever arm to position other front end components. Always support the free end of halfshaft.
- Keep internal CV joints clean and maintain proper grease refill when the rear axle shaft outer boots or rear axle shaft inner boots are replaced.
- An assembled inboard cv joint stub shaft pilot bearing housing can be damaged if it is over-plunged outward from the joint housing.
- Never use a hammer to remove or install halfshafts.

Wheel and Tire Balancing, Rear

WARNING: DO NOT BALANCE THE REAR WHEELS AND TIRES WHILE THEY ARE MOUNTED ON THE VEHICLE. POSSIBLE TIRE DISINTEGRATION, DIFFERENTIAL OR HALFSHAFT FAILURE CAN RESULT, CAUSING PERSONAL INJURY OR EXTENSIVE COMPONENT DAMAGE. USE AN OFF-VEHICLE WHEEL AND TIRE BALANCER ONLY.

Official Licensed Product
Ford Motor Company

Hoisting

CAUTION: Use a frame-contact hoist only. Vehicle or component damage can result if other types of hoists are used.

Never raise the vehicle using the halfshafts as lift points.

Undercoating and Rustproofing

During undercoating and rustproofing procedures, be very careful to protect the rear axle shaft outer boots or rear axle shaft inner boot from coating materials. Foreign materials on the rubber boot convolutions will cause extreme advanced wear.

DIAGNOSIS AND TESTING

Rear Drive Halfshafts

Refer to Section 205-00.

REMOVAL AND INSTALLATION

Halfshaft

Special Tool(s)

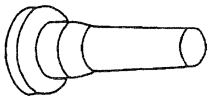 ST1712-A	Differential Plug 205-294 (T89P-4850-B)

⚠ CAUTION: Do not begin this removal procedure unless the following parts are available:

- **a new rear axle wheel hub retainer (4B477)**
- **a new driveshaft bearing retainer circlip (3Z498)**

1. Remove the rear wheel knuckle (5A968); refer to Section 204-02.

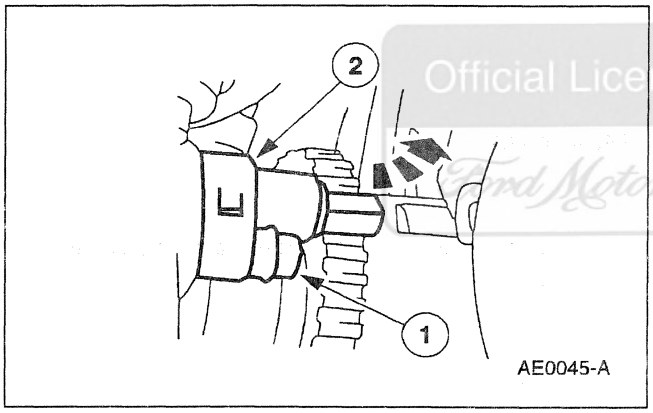

2. Remove the rear brake anti-lock sensor (2C190).
   1 Remove the retaining bolt.
   2 Remove the rear brake anti-lock sensor from the rear axle housing (4010) and position out of the way.

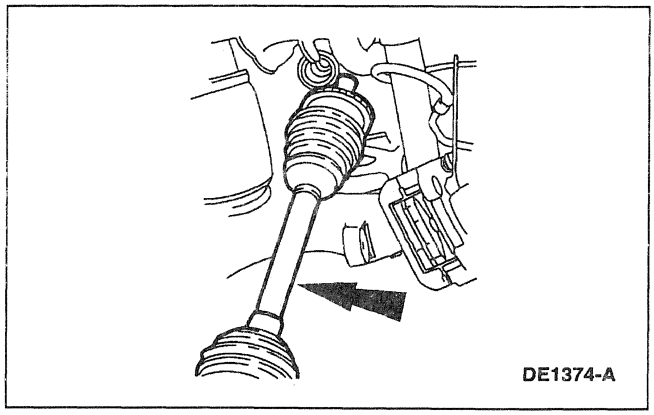

3. Remove the halfshaft from the vehicle.

Official Licensed Product
Ford Motor Company

REMOVAL AND INSTALLATION (Continued)

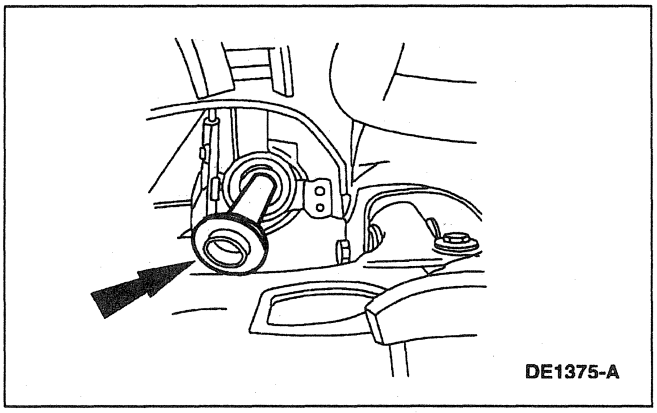

4. Insert the Differential Plug.

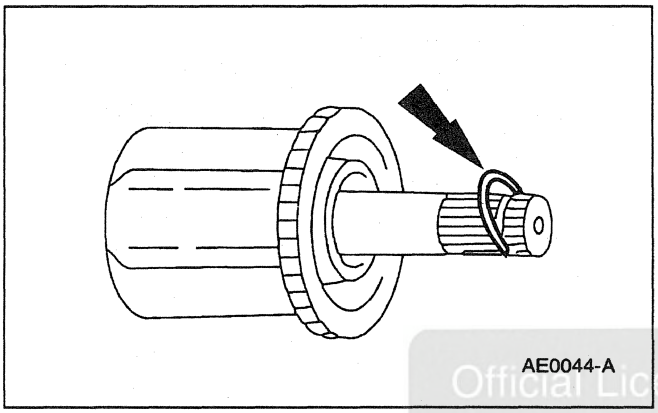

5. Remove and discard the driveshaft bearing retainer circlip.

Official Licensed Product
Ford Motor Company

Installation

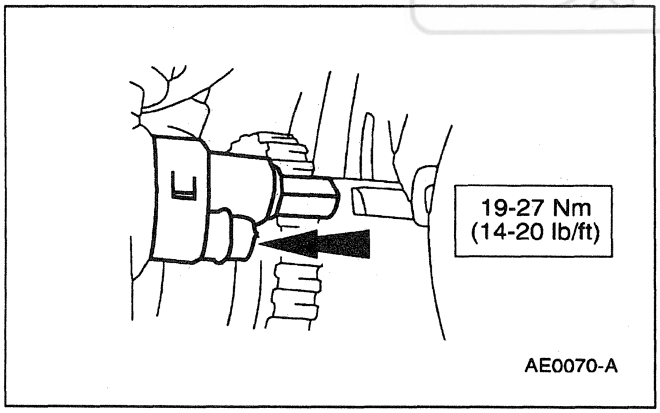

1. Follow the removal procedure in reverse order.

DISASSEMBLY AND ASSEMBLY

Halfshaft Joint

Special Tool(s)

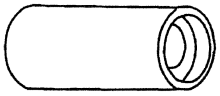 ST1713-A	Bearing Cone Replacer 206-041 (T89P-20202-A)
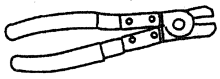 ST1714-A	Boot Clamp Pliers 205-D066 (D87P-1090-A) or Equivalent
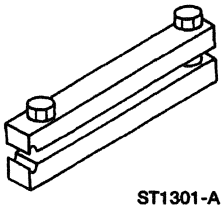 ST1301-A	CV Boot Clamp Tool 205-343 (T95P-3514-A)

(Continued)

Special Tool(s)

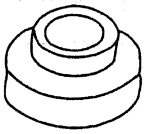 ST1711-A	Rear Hub Dust Seal Replacer 205-289 (T89P-1249-A)
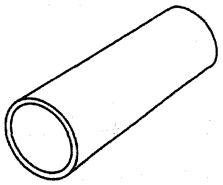 ST1710-A	Spindle/Axle Seal Replacer 205-199 (T83T-3132-A1)

Official Licensed Product
Ford Motor Company

Disassembly

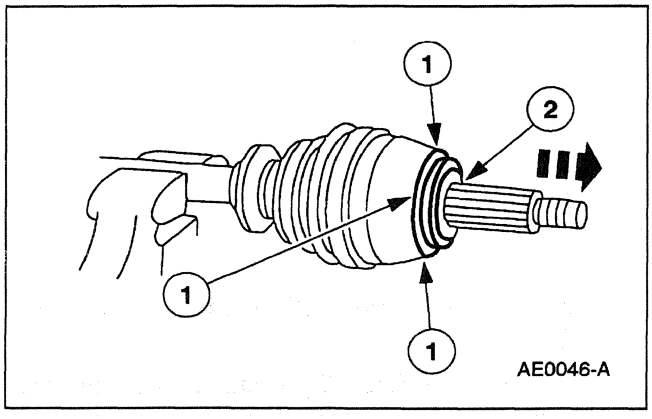

1. Remove the dust shield.
   1 Tap uniformly around the dust shield.
   2 Slide the dust shield off the shaft.

DISASSEMBLY AND ASSEMBLY (Continued)

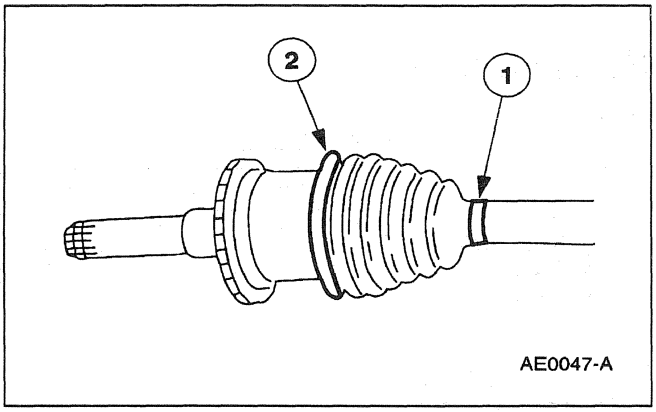

2. Remove the rear axle shaft inner boot clamps.
   1 Cut and discard the small clamp.
   2 Using Boot Clamp Pliers, unhook and save the large clamp.

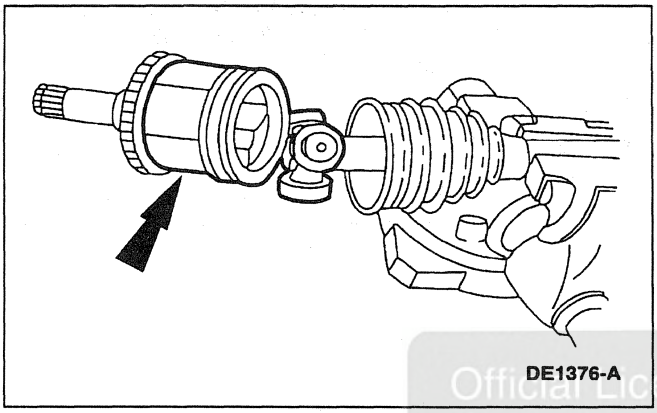

3. Slide the inboard cv joint stub shaft pilot bearing housing (4B413) off of the tripod.

Official Licensed Product
Ford Motor Company

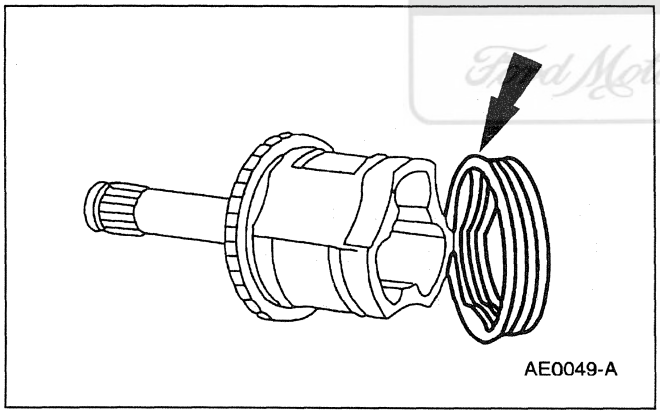

4. Remove the trilobe insert.

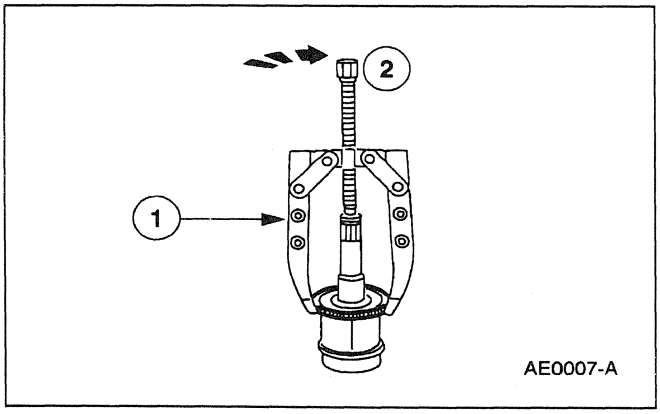

5. Remove the rear brake anti-lock sensor indicator (2C189).
   1 Position a suitable 2-jaw puller on the inboard cv joint stub shaft pilot bearing housing.
   2 Turn the forcing screw clockwise until the rear brake anti-lock sensor indicator is removed.

DISASSEMBLY AND ASSEMBLY (Continued)

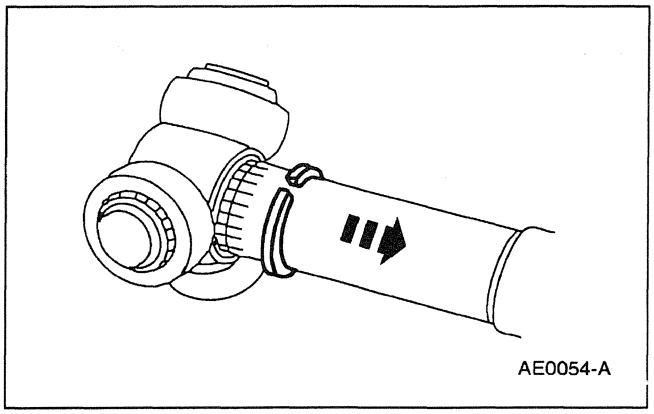
AE0054-A

6. Move the rear axle shaft joint assembly retaining ring (4K184) back on the shaft.

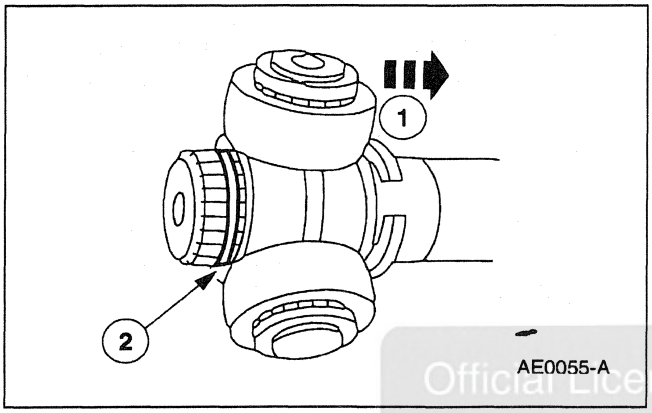

AE0055-A

7. Remove the driveshaft bearing retainer circlip (3Z498).
   1 Move the tripod back on the shaft.
   2 Remove the driveshaft bearing retainer circlip.

Official Licensed Product
Ford Motor Company

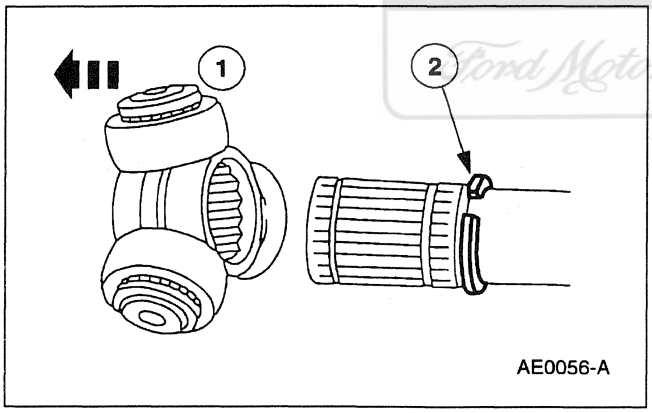

AE0056-A

8. Remove and discard the rear axle shaft joint assembly retaining ring.
   1 Slide the tripod off the shaft.
   2 Remove the rear axle shaft joint assembly retaining ring.

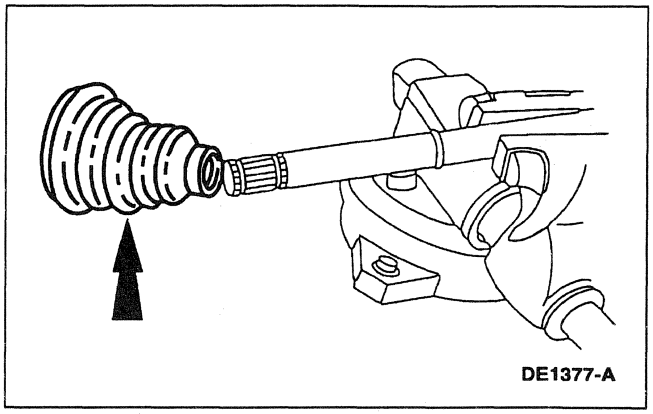
DE1377-A

9. Remove the rear axle shaft inner boot (4L537).

DISASSEMBLY AND ASSEMBLY (Continued)

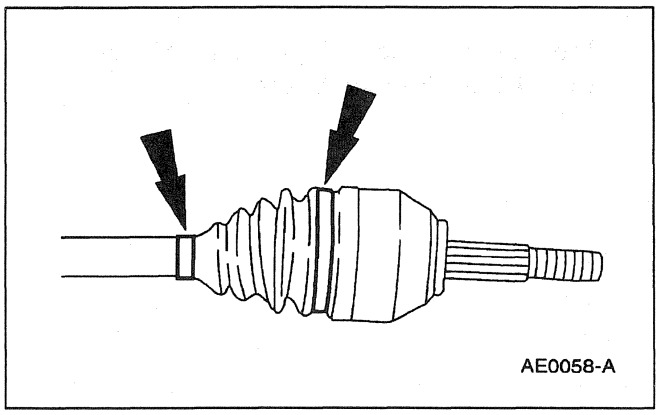

10. Remove and discard the rear axle shaft outer boot clamps.

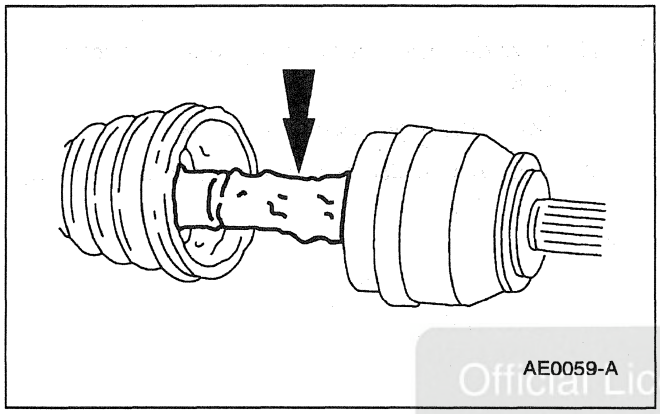

11. **NOTE:** The outboard CV joint is permanently retained to the interconnecting shaft and cannot be disassembled.

    If rear axle shaft outer boot replacement is necessary, check the CV joint condition and, if reusable, clean and repack with Constant Velocity Joint Grease (High Temp) E43Z-19590-A or equivalent meeting Ford specification ESP-M1C207-A.

Official Licensed Product
Ford Motor Company

Assembly

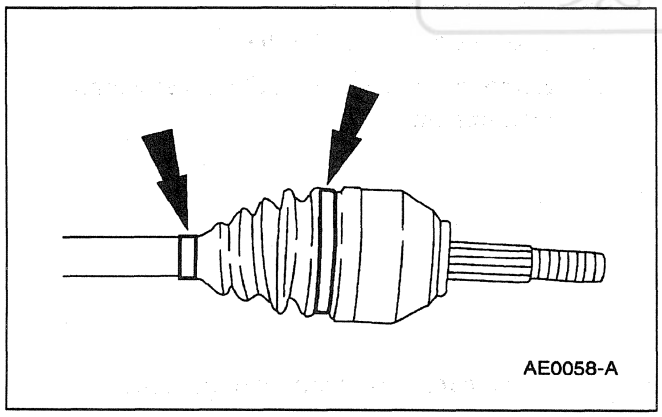

1. Position a new rear axle shaft outer boot (4A331) and two new clamps on the outboard CV joint housing.

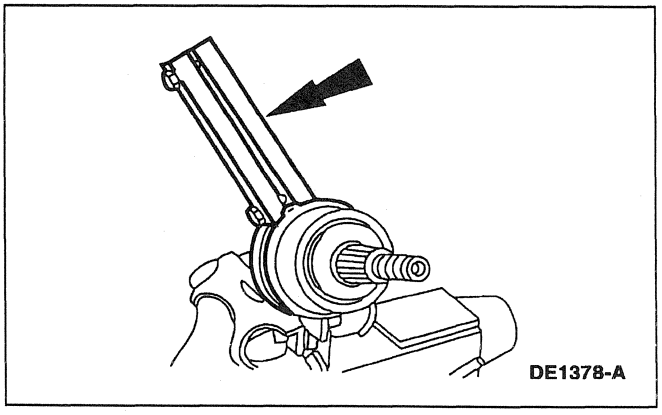

2. Using a CV Boot Clamp Tool, secure the large and small clamps.

DISASSEMBLY AND ASSEMBLY (Continued)

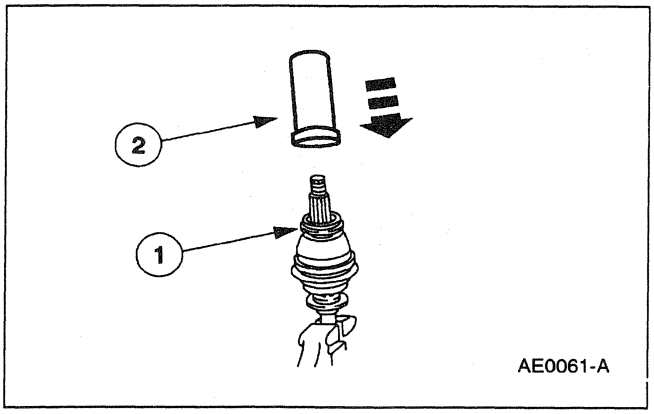

3. Install a new dust shield.
   1 Position the new dust shield on the outboard CV joint housing.
   2 Place the Rear Hub Dust Seal Replacer and the Spindle/Axle Seal Replacer onto the dust shield and hammer into place.

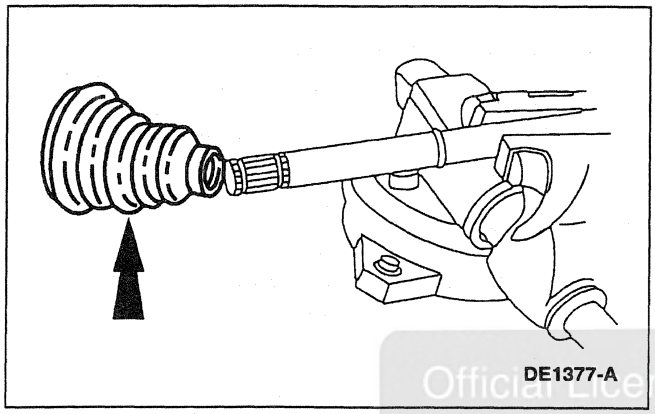

4. Slide the rear axle shaft inner boot onto the interconnecting shaft.

Official Licensed Product
Ford Motor Company

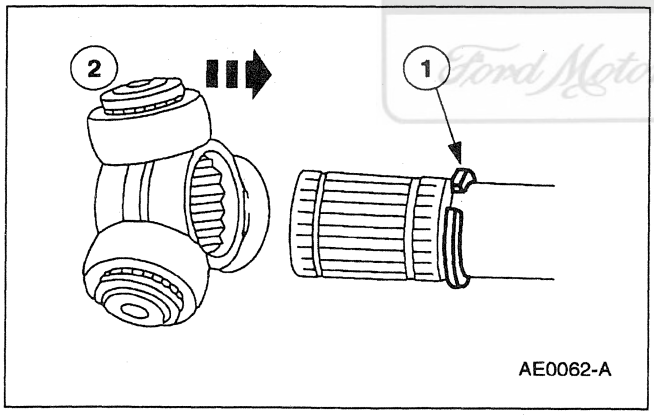

5. Install the tripod.
   1 Position a new rear axle shaft joint assembly retaining ring on the interconnecting shaft past the splines.
   2 Install the tripod with the chamfered side toward the rear axle shaft joint assembly retaining ring.

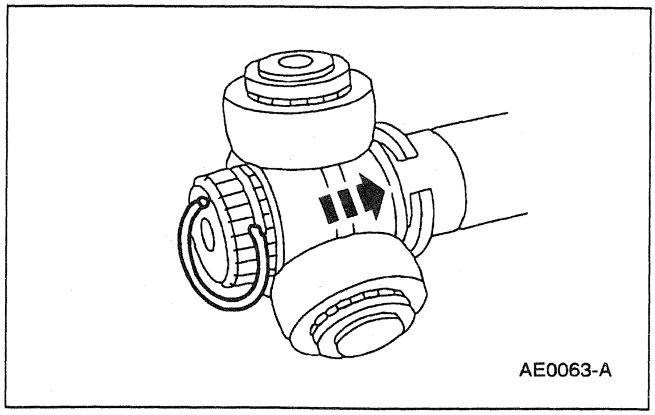

6. **CAUTION: The driveshaft bearing retainer circlip must not be reused.**

   NOTE: To install the driveshaft bearing retainer circlip, start one end in the groove and work the driveshaft bearing retainer circlip over the stub shaft end and into the groove. This will avoid over-expanding the driveshaft bearing retainer circlip.

   Install a new driveshaft bearing retainer circlip.

DISASSEMBLY AND ASSEMBLY (Continued)

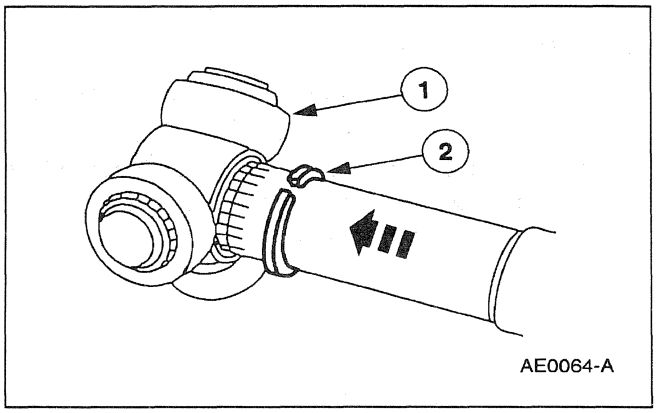

7. Install the rear axle shaft joint assembly retaining ring.
   1 Slide the tripod forward over the U-washer to expose the retaining ring groove.
   2 Install the rear axle shaft joint assembly retaining ring into groove.

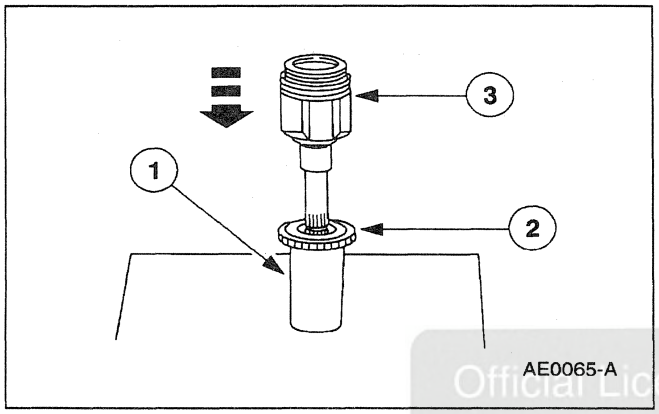

8. Install the rear brake anti-lock sensor indicator.
   1 Position the Bearing Cone Replacer on the press bed.
   2 Place the rear brake anti-lock sensor indicator onto the Bearing Cone Replacer.
   3 Insert the inboard cv joint stub shaft pilot bearing housing into the rear brake anti-lock sensor indicator, and press into place.

Official Licensed Product
Ford Motor Company

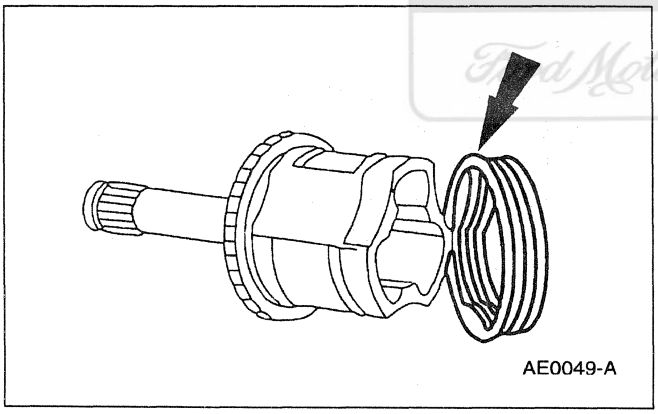

9. Install the trilobe insert onto the inboard cv joint stub shaft pilot bearing housing.

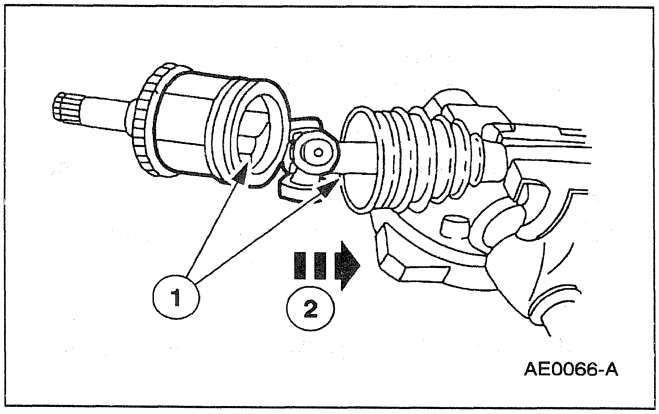

10. Install the inboard cv joint stub shaft pilot bearing housing.
    1 Fill the inboard cv joint stub shaft pilot bearing housing and the rear axle shaft inner boot with Constant Velocity Joint Grease (High Temp) E43Z-19590-A or equivalent meeting Ford specification ESP-M1C207-A. The total amount of grease required is 250 grams (8.8 ounces).
    2 Slide the inboard cv joint stub shaft pilot bearing housing onto the tripod.

DISASSEMBLY AND ASSEMBLY (Continued)

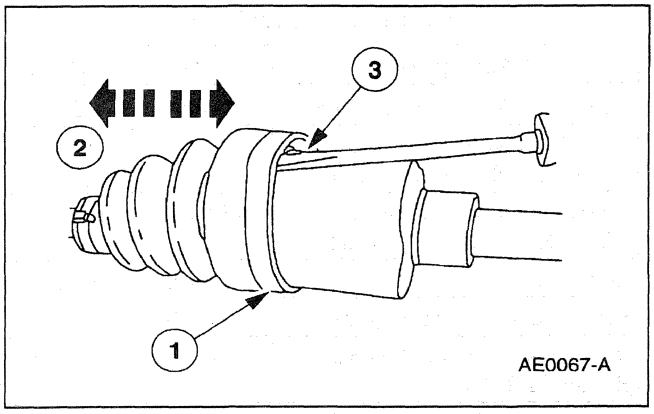

11. Install the rear axle shaft inner boot.
    1 Position the rear axle shaft inner boot over the trilobe insert.
    2 Adjust the assembled length to specification.
    3 Insert a dulled screwdriver between the rear axle shaft inner boot and the trilobe insert to release air pressure.

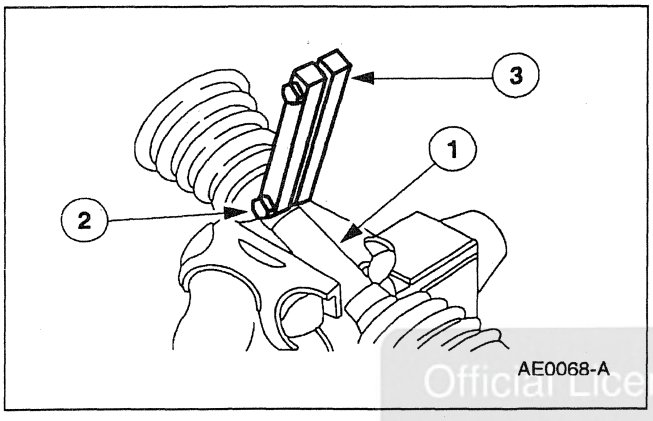

12. Install a new small CV boot clamp.
    1 Place the interconnecting shaft in a vise.
    2 Position the new clamp on the boot.
    3 Tighten the clamp with a CV Boot Clamp Tool.

Official Licensed Product
Ford Motor Company

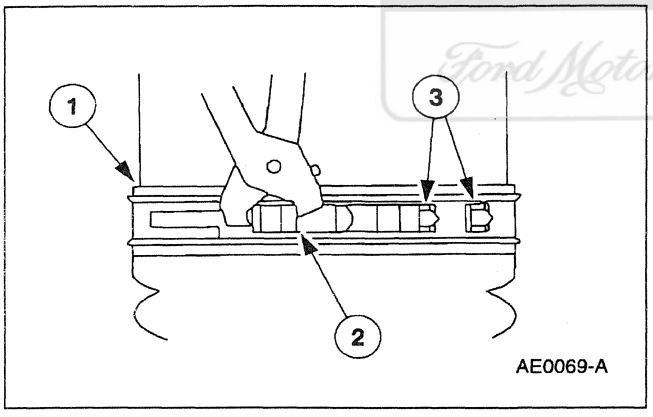

13. Install the large CV boot clamp.
    1 Position the clamp onto the boot.
    2 Place the CV Boot Clamp Tool into the closing hooks.
    3 Draw the closing hooks together to engage the clamp.

SPECIFICATIONS

General Specifications

Item	Specification
Halfshaft Assembled Length	722.4 mm (28.44 inches)

SPECIFICATIONS (Continued)

Lubricant Specifications

CV Joint Location	Specification	Grams	Ounces
Outboard	ESP-M1C207-A, Ford Part No. E43Z-19590-A	225	7.9
Inboard	ESP-M1C207-A, Ford Part No. E43Z-19590-A	250	8.8

Lubricant/Cleaner/Adhesive Specifications

Description	Part Number	Ford Specification
Premium Long-Life Grease	XG-1-C	ESA-M1C75-B
Constant Velocity Joint Grease (High Temp)	E43Z-19590-A	ESP-M1C207-A

Torque Specifications

Description	Nm	Lb/Ft
Rear Axle Wheel Hub Retainer	340	251
Rear Suspension Arm-to-Rear Wheel Knuckle Bolt (Lower)	128-178	95-131
Rear Suspension Arm-to-Rear Wheel Knuckle Nut (Upper)	158-193	117-142
Lug Nuts	115-142	85-104
Brake Caliper Locating Pins	87-119	65-87
Rear Brake Anti-Lock Sensor Retaining Bolts	19-27	14-19

Official Licensed Product
Ford Motor Company

SECTION 206-00 Brake System — General Information

VEHICLE APPLICATION: Mark VIII

SUBJECT **PAGE**

DESCRIPTION AND OPERATION

Brake System 206-00-2
Booster, Power Brake 206-00-4
Brake Hose 206-00-3
Brake Pressure Control Valve 206-00-3
Brake System, Anti-Lock 206-00-4
Brake System, Hydraulic 206-00-3
Brake System, Parking 206-00-4
Brake Tubing 206-00-3
Brakes, Front Disc 206-00-4
Brakes, Rear Disc 206-00-4
Master Cylinder, Dual 206-00-3

DIAGNOSIS AND TESTING

Brake System 206-00-4
Component Tests 206-00-11
Pinpoint Tests 206-00-7
Symptom Chart 206-00-6

GENERAL PROCEDURES

Bleeding — Components 206-00-13
Bleeding — System 206-00-19
Hydraulic Leak Check 206-00-23

SPECIFICATIONS 206-00-23

Official Licensed Product
Ford Motor Company

DESCRIPTION AND OPERATION

Brake System

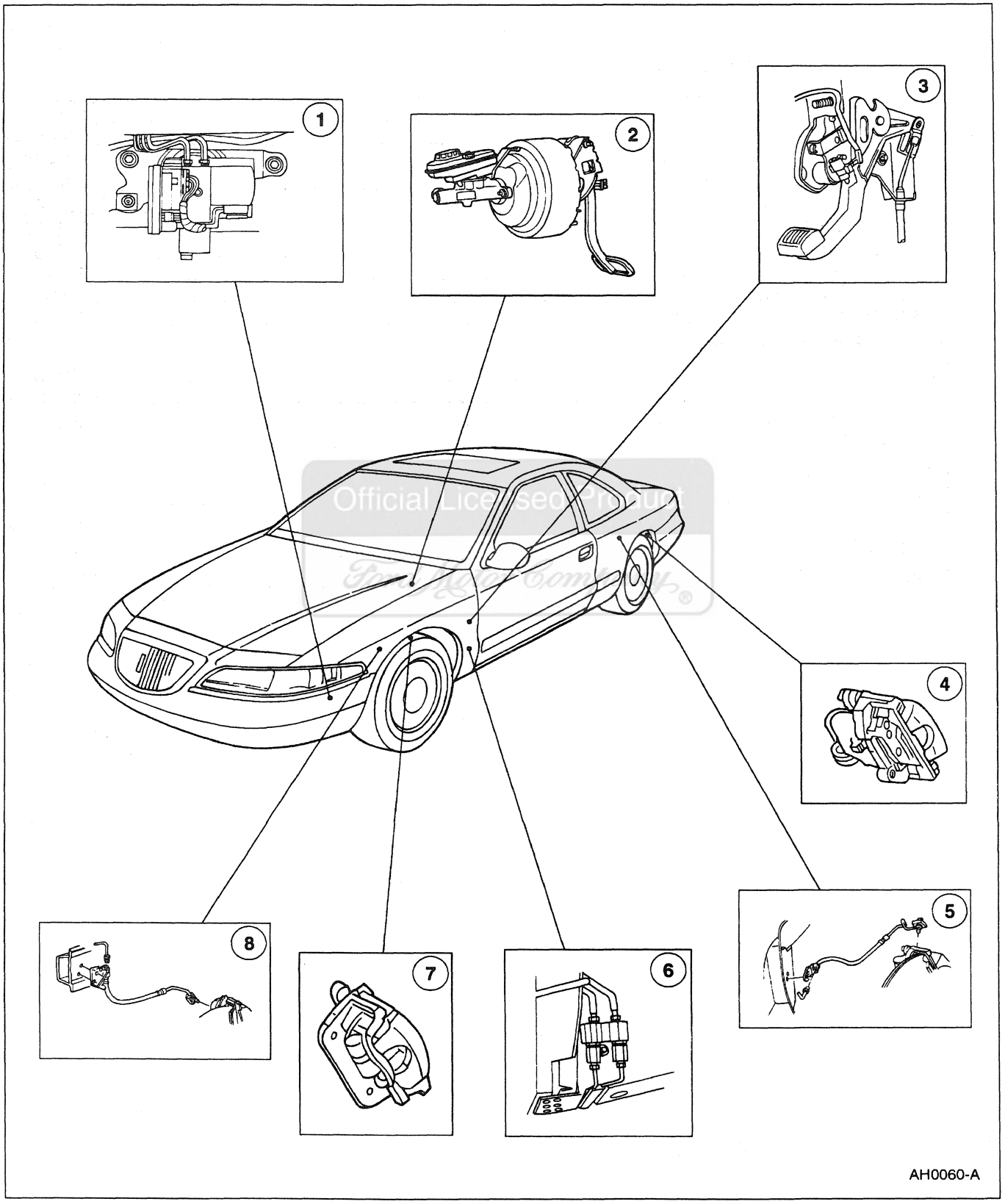

DESCRIPTION AND OPERATION (Continued)

Item	Part Number	Description
1	2C219	Anti-Lock Brake Module
2	2140/2005	Brake Master Cylinder/Power Brake Booster Assy
3	2780	Parking Brake Control
4	2553	Rear Disc Brake Caliper

(Continued)

Item	Part Number	Description
5	2A442	Rear Wheel Brake Hose
6	2B091	Brake Pressure Control Valve
7	2B120	Disc Brake Caliper
8	2078	Front Brake Hose

Brake System, Hydraulic

This vehicle is equipped with a brake pedal-actuated hydraulic dual brake system. The system consists of the following:

- front disc brake calipers (2B120); refer to Section 206-03
- rear disc brake calipers (2553); refer to Section 206-04
- a four wheel anti-lock brake system (4WABS); refer to Section 206-09
- brake master cylinder (2140); refer to Section 206-06
- brake pressure control valve (2B091)
- brake tubes and brake hoses

The dual ABS hydraulic system is diagonally split with the LH front and RH rear making up one circuit and the RH front and LH rear making up the other circuit.

Master Cylinder, Dual

WARNING: BRAKE FLUID CONTAINS POLYGLYCOL ETHERS AND POLYGLYCOLS. AVOID CONTACT WITH EYES. WASH HANDS THOROUGHLY AFTER HANDLING. IF BRAKE FLUID CONTACTS EYES, FLUSH EYES WITH RUNNING WATER FOR 15 MINUTES. GET MEDICAL ATTENTION IF IRRITATION PERSISTS. IF TAKEN INTERNALLY, DRINK WATER AND INDUCE VOMITING. GET MEDICAL ATTENTION IMMEDIATELY.

The brake master cylinder contains the following features:

- The brake master cylinder has a common plastic brake master cylinder reservoir (2K478) and low fluid level indicator combined in one assembly.

Brake Pressure Control Valve

The brake pressure control valve :

- regulates the hydraulic pressure in the rear brake system.
- is located behind the LH inner fender splash shield.

Operation is as follows:

- When the brake pedal (2455) is applied, the full rear brake fluid pressure passes through the brake pressure control valve to the rear brake system until the valve's split point is reached.
- Above its split point, the brake pressure control valve begins to reduce the hydraulic pressure to the rear brakes.
- The reduced pressure creates a balanced braking condition between the front and rear wheels to minimize rear wheel lockup during hard braking.

Brake Tubing

WARNING: COPPER TUBING SHOULD NOT BE USED IN A HYDRAULIC SYSTEM. WHEN BENDING BRAKE TUBING TO FIT UNDERBODY, BE CAREFUL NOT TO KINK OR CRACK THE TUBE.

If a section of the brake tubing becomes damaged, the entire section should be replaced with tubing of the same type, size, shape and length.

Brake Hose

A flexible brake hose should be replaced if it shows signs of softening, cracking or other damage.

Official Licensed Product
Ford Motor Company

DESCRIPTION AND OPERATION (Continued)

When installing a new brake hose, two new sealing washers should be used. Positioning of the brake hose to brake caliper is controlled by a self-indexing brass block. When securing the front brake hose connection to the caliper, tighten the bolt to specification. Inspect the position of the installed brake hose for clearance to other chassis components. Positioning of the rear wheel brake hose (2A442) is controlled by self-indexing end fittings.

Booster, Power Brake

The power brake booster (2005) is a vacuum operated, dual diaphragm type and is equipped with a separately serviceable power brake booster check valve (2365). For more information on the power brake booster, refer to Section 206-07.

Brakes, Front Disc

Front disc brakes consist of the following features:

- The front disc brakes have hydraulically activated pin slider-type disc brake front caliper assemblies with a 294-mm (11.6-inch) full-cast vented front disc brake rotor (1125).

Brakes, Rear Disc

The rear disc brakes consist of the following features:

- a full-cast vented rear disc brake rotor (2C026).
- hydraulically-activated rear disc brake caliper assemblies with integral mechanically (cable) operated parking brake mechanisms.

Brake System, Parking

The parking brake system consists of the following features:

- The system is cable-actuated and controlled by foot-operated parking brake control (2780).
- The parking brake control pulls a cable which actuates the rear disc brake calipers.
- The parking brake is self adjusting.

For more information on the parking brake system, refer to Section 206-05.

Brake System, Anti-Lock

The ABS is a four-wheel system which helps prevent wheel lockup by automatically modulating the brake pedal pressure during an emergency stop. By preventing the wheels from locking, it enables the driver to maintain steering control and stop in the shortest possible distance under most conditions.

During normal braking, the ABS and non-ABS brake pedal feel will be the same. During ABS operation, a pulsation can be felt in the brake pedal, accompanied with a fall and then a rise in brake pedal height and a clicking sound.

Official Licensed Product
Ford Motor Company

DIAGNOSIS AND TESTING

Brake System

Refer to Electrical and Vacuum Troubleshooting Manual, Cell 62, Instrument Cluster for schematic and connector information.

DIAGNOSIS AND TESTING (Continued)

Inspection and Verification

Preliminary Checks

⚠ WARNING: USE OF ANY OTHER THAN THE APPROVED DOT 3 BRAKE FLUID WILL CAUSE PERMANENT DAMAGE TO BRAKE COMPONENTS AND WILL RENDER THE BRAKES INOPERATIVE.

⚠ WARNING: BRAKE FLUID CONTAINS POLYGLYCOL ETHERS AND POLYGLYCOLS. AVOID CONTACT WITH EYES. WASH HANDS THOROUGHLY AFTER HANDLING. IF BRAKE FLUID CONTACTS EYES, FLUSH EYES WITH RUNNING WATER FOR 15 MINUTES. GET MEDICAL ATTENTION IF IRRITATION PERSISTS. IF TAKEN INTERNALLY, DRINK WATER AND INDUCE VOMITING. GET MEDICAL ATTENTION IMMEDIATELY.

⚠ CAUTION: Do not spill brake fluid onto painted surfaces. If spilled, wipe up immediately.

NOTE: Always check the fluid level in the brake master cylinder reservoir (2K478) before performing the test procedures. If the fluid level is not at the correct level, add High Performance DOT 3 Brake Fluid C6AZ-19542-AB or DOT 3 equivalent meeting Ford specification ESA-M6C25-A, DOT 3.

NOTE: Prior to performing any diagnosis, make certain that the brake warning indicator is functional; refer to Section 413-01.

The first indicator that something may be wrong in the brake system is a change in the feeling through the brake pedal (2455). The brake warning indicator in the instrument cluster and the brake fluid level in the brake master cylinder reservoir are also indicators of system concerns.

If a wheel (1007) is locked and the vehicle must be moved, open a bleeder screw at the locked wheel to let out enough fluid to relieve the pressure. Close the bleeder screw. This bleeding operation may release the brakes but will not correct the cause of trouble. If this does not relieve the locked wheel condition, repair the locked components before proceeding.

Brake Booster

Inspect all hoses and connections. All unused vacuum connectors should be capped. Hoses and their connections should be properly secured and in good condition with no holes, soft or collapsed areas.

Road Test

Perform a Road Test to compare actual vehicle braking performance with the performance standards expected by the driver. The ability of the test driver to make valid comparisons and detect performance deficiencies will depend on experience.

The driver should have a thorough knowledge of brake system operation and accepted general performance guidelines in order to make good comparisons and detect performance problems.

Select a road that is reasonably smooth and level. Gravel or bumpy roads are not suitable because the surface does not allow the tires to grip the road equally. Avoid crowned roads.

A key factor in evaluating brake concerns is the deceleration rate. This varies from vehicle to vehicle and with changes in operating conditions. It is evident how well the brakes are working after just a few applications.

Avoid locking the brakes. Locked brakes are not an indicator of braking efficiency.

Visual Inspection Chart

Mechanical	Electrical
• Brake master cylinder • Brake caliper piston • Disc brake rotors • Wheel bearings • Brake pads • Power brake booster • Brake pedal linkage • Booster vacuum hose • Tires • Debris	• Parking brake switch • Damaged or corroded wiring harness • Brake master cylinder fluid level switch

For low or spongy brake pedal concerns:

- Check and, if necessary, refill the brake master cylinder reservoir.
- Bleed the brake system and retest the brake pedal feel.
- If the brake pedal is still low or feels spongy, check the wheel bearings. Refer to Section 204-01 for front wheel bearings and Section 204-02 for rear wheel bearings.

DIAGNOSIS AND TESTING (Continued)

For slow or incomplete brake pedal return concern:

- Inspect for binding, damage, correct installation or interference at the brake pedal.
- Check the brake booster for binding, damage and correct installation.

For a vibration concern when brakes are applied:

- Road test the vehicle.
- Apply the parking brake and note if vibration is felt.
- If vibration can be felt while applying only the parking brake, use a hub-mount brake lathe to machine the rear disc brake rotors if final thickness will be within specification. Ford recommends on-vehicle rotor machining. Follow the lathe manufacturer's instructions. Retest the vehicle for normal operation.
- If vibration is only felt while applying the brake pedal, use a hub-mount brake lathe to machine the front disc brake rotors. Ford recommends on-vehicle rotor machining. Follow the lathe manufacturer's instructions. Retest the vehicle for normal operation.

Symptom Chart

Symptom Chart

Condition	Possible Source	Action
• Brakes Pull or Drift	• Tire air pressure. • Wheel alignment. • Brake pads. • Brake components. • Suspension component.	• GO to Pinpoint Test A.
• Red Brake Warning Indicator Always On	• Instrument cluster. • Circuit. • Parking brake. • Brake fluid level.	• GO to Section 413-01.
• Brake Pedal Goes Down Fast	• Brake fluid level. • Air in system. • Brake master cylinder.	• FILL the brake master cylinder reservoir. BLEED the system. • BLEED the system. • PERFORM the brake master cylinder component test in this section.
• The Brake Pedal Eases Down Slowly	• Air in system. • Brake master cylinder.	• BLEED the system. REFER to Bleeding in this section. • PERFORM the brake master cylinder component test in this section.
• Brakes Lock Up During Light Brake Pedal Force	• Brake pads. • Disc brake caliper. • Parking brake component. • Anti-lock brake control system.	• GO to Pinpoint Test B.
• Excessive/Erratic Brake Pedal Travel	• Leak in hydraulic system. • Air in system. • Disc brake caliper. • Brake booster-to-brake master cylinder push rod adjustment. • Brake master cylinder.	• GO to Pinpoint Test C.

Ford Motor Company Licensed Product

DIAGNOSIS AND TESTING (Continued)

Symptom Chart (Continued)

Condition	Possible Source	Action
• Brakes Drag	• Parking brake component. • Disc brake caliper. • Brake booster-to-brake master cylinder push rod adjustment. • Brake master cylinder.	• REPAIR or REPLACE components as necessary; REFER to Section 206-05. • REPAIR or REPLACE as necessary; REFER to Section 206-03 or Section 206-04. • ADJUST the push rod; REFER to Section 206-07. • PERFORM the brake master cylinder component test in this section.
• Excessive Brake Pedal Effort	• Power brake booster. • Power brake booster check valve. • Power brake booster hose.	• PERFORM the brake booster component test in this section.
• Red Brake Warning Indicator Inoperative	• Circuit. • Bulb.	• REFER to Section 413-01.
• Brake Noise	• Disc brake rotors. • Brake pads. • Anti-rattle clips. • Disc brake caliper mounting bolts.	• MACHINE or REPLACE as necessary; REFER to Section 206-03 or Section 206-04. • REPLACE in axle sets as necessary. REFER to Section 206-03 or Section 206-04. • REPAIR or REPLACE as necessary. REFER to Section 206-03 or Section 206-04.

Official Published Product
Ford Motor Company

Pinpoint Tests

PINPOINT TEST A: BRAKES PULL OR DRIFT

TEST CONDITIONS	TEST DETAILS/RESULTS/ACTIONS
A1 CHECK THE TIRE PRESSURE	
1 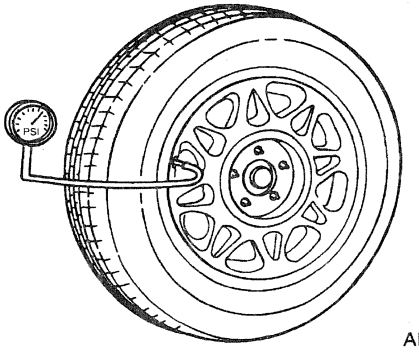 AH0038-A	1 Check for excessive wear and measure the air pressure in all four tires. • Are the tires good and the tire pressure within specifications? → **Yes** GO to **A2**. → **No** ADJUST the tire pressure. ROTATE the tires front to rear. REPLACE excessively worn tires.

(Continued)

DIAGNOSIS AND TESTING (Continued)

PINPOINT TEST A: BRAKES PULL OR DRIFT (Continued)

TEST CONDITIONS	TEST DETAILS/RESULTS/ACTIONS
A2 CHECK THE CALIPER PISTON AND PINS	
1 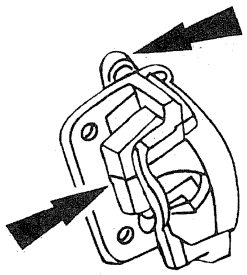 AH0041-A	1 Check the disc brake caliper pistons and pins for binding or sticking. • Do the disc brake caliper pistons or pins bind or stick? → **Yes** REPAIR or REPLACE components as necessary. → **No** GO to **A3**.
A3 INSPECT THE BRAKE PADS	
1 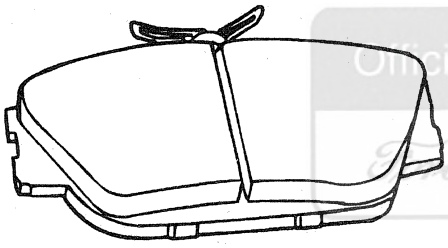 AH0048-A	1 Inspect the brake pads for contamination and wear concerns. • Are the brake pads OK? → **Yes** GO to **A4**. → **No** REPLACE the brake pads; REFER to Section 206-03 (front) or Section 206-04 (rear).
A4 INSPECT THE DISC BRAKE ROTORS AND HUBS	
1 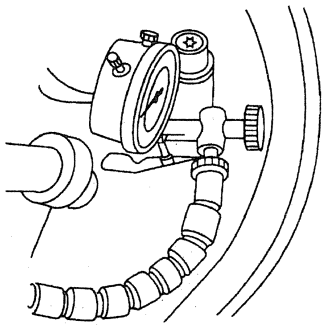 AH0300-A	1 Inspect the disc brake hubs and rotors for excessive runout or damage. • Does excessive runout or damage exist? → **Yes** REPAIR and REPLACE the disc brake hub or rotor as necessary. → **No** GO to **A5**.

(Continued)

Official Licensed Product Ford Motor Company

DIAGNOSIS AND TESTING (Continued)

PINPOINT TEST A: BRAKES PULL OR DRIFT (Continued)

TEST CONDITIONS	TEST DETAILS/RESULTS/ACTIONS
A5 CHECK THE ALIGNMENT	
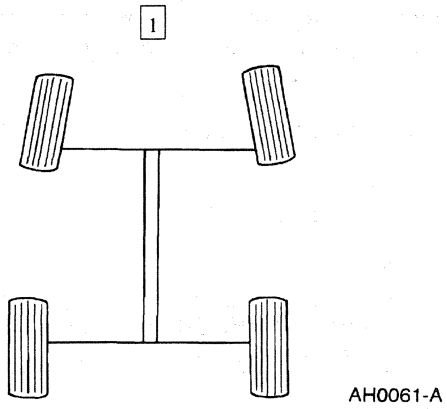	1 Check for correct camber, caster and toe-in settings; refer to Section 204-00. • Is the alignment set to specification? → **Yes** REPLACE the disc brake caliper at the affected wheel. TEST the system for normal operation. → **No** RESET the alignment and road test vehicle.

PINPOINT TEST B: BRAKES LOCK UP DURING LIGHT BRAKE PEDAL FORCE

TEST CONDITIONS	TEST DETAILS/RESULTS/ACTIONS
B1 CHECK FOR BINDING OR STICKING BRAKE COMPONENTS	
	2 Check for binding, damage and correct installation at each wheel brake component. • Do any of the components bind or stick? → **Yes** REPAIR or REPLACE components as necessary. TEST the system for normal operation. → **No** GO to **B2**.

Official Licensed Product
Ford Motor Company

(Continued)

DIAGNOSIS AND TESTING (Continued)

PINPOINT TEST B: BRAKES LOCK UP DURING LIGHT BRAKE PEDAL FORCE (Continued)

TEST CONDITIONS	TEST DETAILS/RESULTS/ACTIONS
B2 CHECK THE PARKING BRAKE COMPONENTS	
	1 Check parking brake components for damage, seized condition, and proper adjustment; refer to Section 206-05. • Are the parking brake components OK? → **Yes** GO to **B3**. → **No** REPAIR or REPLACE components as necessary; REFER to Section 206-05. TEST the system for normal operation.
B3 INSPECT THE BRAKE PADS	
	1 Inspect brake pads for contamination, excessive wear or damage. Refer to Section 206-03 for front disc brake. Refer to Section 206-04 for rear disc brake. • Are the brake pads OK? → **Yes** GO to **B4**. → **No** REPLACE the brake pads as necessary. TEST the system for normal operation.
B4 CHECK FOR LOOSE BRAKE COMPONENT MOUNTINGS	
	1 Check for loose or damaged caliper mounting bolts. • Are the component mountings OK? → **Yes** CHECK the 4-wheel anti-lock brake system (4WABS); REFER to Section 206-09. → **No** REPAIR as necessary. TEST the system for normal operation.

Official Licensed Product
Ford Motor Company

DIAGNOSIS AND TESTING (Continued)

PINPOINT TEST C: EXCESSIVE/ERRATIC BRAKE PEDAL TRAVEL

TEST CONDITIONS	TEST DETAILS/RESULTS/ACTIONS
C1 CHECK FOR SPONGY PEDAL	
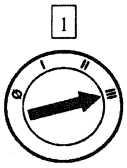 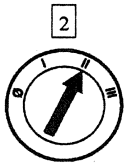	3 Operate the brake pedal and note pedal feel. • Does the brake pedal feel spongy? → **Yes** BLEED the brake system. REFER to Bleeding in this section. TEST the system for normal operation. → **No** GO to **C2**.
C2 CHECK THE BRAKE PEDAL	
	1 Inspect the brake pedal for binding, obstruction or damage. • Is the brake pedal OK? → **Yes** GO to **C3**. → **No** REPAIR or REPLACE as necessary. TEST the system for normal operation.
C3 CHECK THE BRAKE COMPONENTS	
	1 Inspect the disc brake components for binding, damage, correct installation and contamination. • Are the disc brake components OK? → **Yes** REPLACE the power brake booster. TEST the system for normal operation. → **No** REPAIR or REPLACE as necessary. TEST the system for normal operation.

Official Licensed Product
Ford Motor Company

Component Tests

Brake Booster

1. Check the hydraulic brake system for leaks or insufficient fluid.
2. With the transmission (7003) in NEUTRAL, stop the engine (6007) and apply the parking brake control (2780). Apply the brake pedal several times to exhaust all vacuum in the system.

DIAGNOSIS AND TESTING (Continued)

3. Apply the brake pedal and hold it in the applied position. Start the engine. If the vacuum system is operating, the brake pedal will tend to move downward under constant foot pressure. If no motion is felt, the power brake booster system is not functioning. Continue the test with the following steps.
4. Remove the vacuum booster hose (2A047) from the check valve connection. Manifold vacuum must be available at the check valve end of the vacuum booster hose with the engine at idle speed and the transmission in NEUTRAL. If the manifold vacuum is available to the power brake booster, connect the vacuum booster hose to the power brake booster check valve and repeat Steps 2 and 3 above.
5. Check and if no downward movement of the brake pedal is felt, replace the power brake booster.
6. Operate the engine a minimum of 10 seconds at fast idle. Stop the engine, and let the vehicle stand for 10 minutes. Then apply the brake pedal with approximately 89 N (20 lbs) of force. The brake pedal feel should be the same as that noted with the engine operating. If the brake pedal feels hard (no power assist), replace the check valve and retest. If the brake pedal feels spongy, bleed the hydraulic system to remove air; refer to Bleeding in this section.

Check Valve

The function of the power brake booster check valve is to allow manifold vacuum to enter the power brake booster and prevent the escape of vacuum in case manifold vacuum is lost during sustained full throttle operation.

To test the function of the power brake booster check valve :

- Start and run the engine for at least 10 seconds.
- Operate the brake pedal to check for power assist.
- Disconnect the vacuum booster hose from the power brake booster. Do not remove the power brake booster check valve from the power brake booster.
- There should be enough vacuum retained in the power brake booster for at least one more power-assisted brake operation.

Brake Master Cylinder

Normal Conditions

The following conditions are considered normal and are not indications that the brake master cylinder is in need of service.

Condition 1: During normal operation of the brake master cylinder, the fluid level in the brake master cylinder reservoir will rise during brake application and fall during release. The net fluid level (after brake application and release) will remain unchanged.

Condition 2: A trace of brake fluid will exist on the booster shell below the master cylinder mounting flange. This results from the normal lubricating action of the master cylinder bore and seal.

Condition 3: Fluid level will decrease with pad wear.

Abnormal Conditions

Changes in brake pedal feel or travel are indicators that something could be wrong in the brake system. Refer to the Symptom Chart for abnormal condition diagnosis.

Bypass Condition Test

1. Disconnect the brake lines at the brake master cylinder.
2. Plug the outlet ports of the brake master cylinder.
3. Apply the brakes. If brake pedal height cannot be maintained, the brake master cylinder has an internal leak and must be rebuilt or replaced.

Compensator Port Check

The purpose of the compensator ports in the brake master cylinder is to supply any additional brake fluid required by the system due to brake pad wear and to allow brake fluid returning from the brake lines to the brake master cylinder to enter the brake master cylinder reservoir.

The returning brake fluid will cause a slight turbulence in the brake master cylinder reservoir. Turbulence seen in the brake master cylinder reservoir upon release of the brake pedal is normal and shows that the compensating ports are not plugged.

Ford Licensed Product Ford Motor Company

GENERAL PROCEDURES

Bleeding — Components

Special Tool(s)

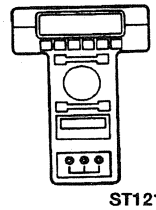 ST1217-A	New Generation Star (NGS) Tester 418-F048 (007-00500) or Equivalent
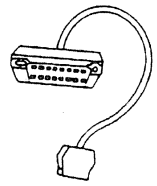 ST1270-A	NGS Flash Cable 418-F120 (007-00531) or Equivalent

Caliper

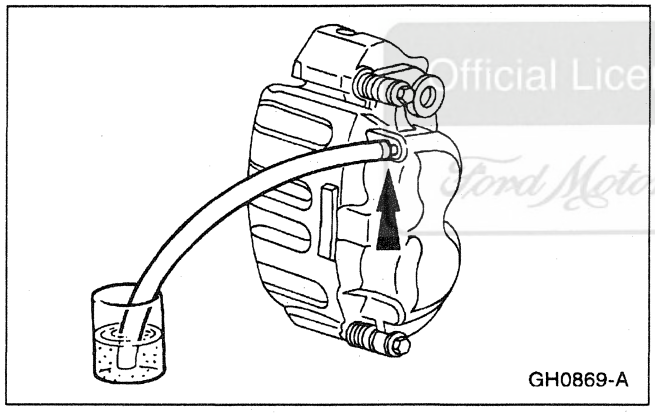
GH0869-A

1. **NOTE:** It is not necessary to do a complete brake system bleed if only the disc brake caliper was disconnected.

   Place a box end wrench on the disc brake caliper bleeder screw. Attach a rubber drain tube to the disc brake caliper bleeder screw, and submerge the free end of the tube in a container partially filled with clean brake fluid.

2. Have an assistant pump the brake pedal (BP)(2B222) and then hold firm pressure on the brake pedal.

3. Loosen the disc brake caliper bleeder screw until a stream of brake fluid comes out. While the assistant maintains pressure on the brake pedal, tighten the disc brake caliper bleeder screw.
   - Repeat until clear, bubble-free fluid comes out.
   - Refill the brake master cylinder reservoir (2K478) as necessary.

GENERAL PROCEDURES (Continued)

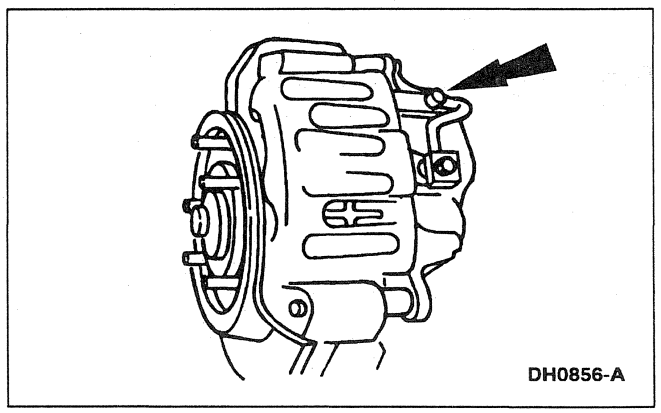

4. Tighten the disc brake caliper bleeder screw; refer to Specifications in this section.

Master Cylinder Priming — In-Vehicle or Bench

WARNING: BRAKE FLUID CONTAINS POLYGLYCOL ETHERS AND POLYGLYCOLS. AVOID CONTACT WITH EYES. WASH HANDS THOROUGHLY AFTER HANDLING. IF BRAKE FLUID CONTACTS EYES, FLUSH EYES WITH RUNNING WATER FOR 15 MINUTES. GET MEDICAL ATTENTION IF IRRITATION PERSISTS. IF TAKEN INTERNALLY, DRINK WATER AND INDUCE VOMITING. GET MEDICAL ATTENTION IMMEDIATELY.

CAUTION: Do not allow the brake master cylinder reservoir to run dry during the bleeding operation. Keep the brake master cylinder reservoir filled with the specified brake fluid. Never reuse the brake fluid that has been drained from the hydraulic system.

CAUTION: Brake fluid is harmful to painted and plastic surfaces. If brake fluid is spilled onto a painted or plastic surface, immediately wash it with water.

NOTE: When any part of the hydraulic system has been disconnected for repair or replacement, air can enter the system and cause spongy brake pedal action. This requires bleeding of the hydraulic system after it has been properly connected. The hydraulic system can be bled manually or with pressure bleeding equipment.

NOTE: When the brake master cylinder (2140) has been replaced or the system has been emptied, or partially emptied, it should be primed to prevent air from entering the system.

Official License Ford Motor Company

GENERAL PROCEDURES (Continued)

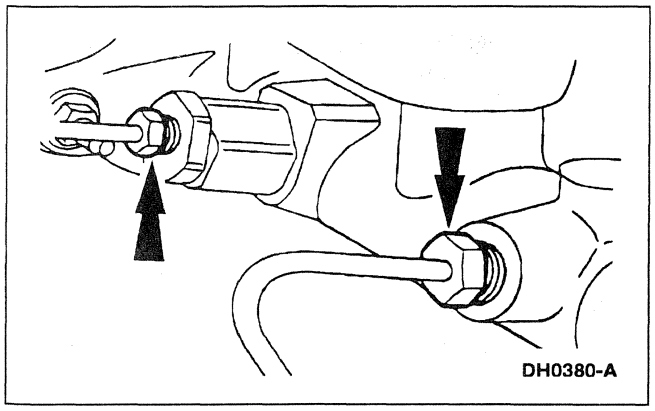
DH0380-A

1. For in-vehicle priming, disconnect the brake lines.

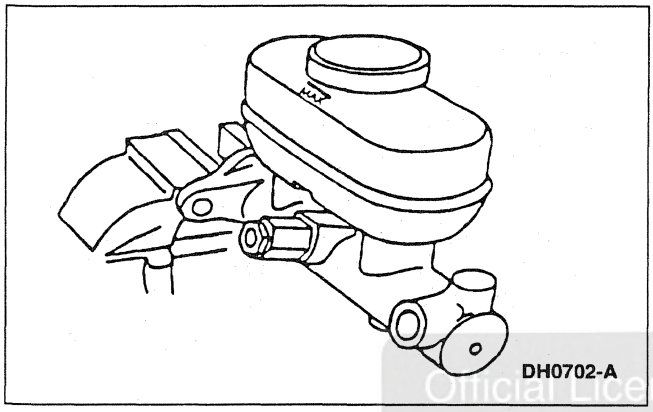

DH0702-A

2. For bench priming, mount the brake master cylinder in a vise.

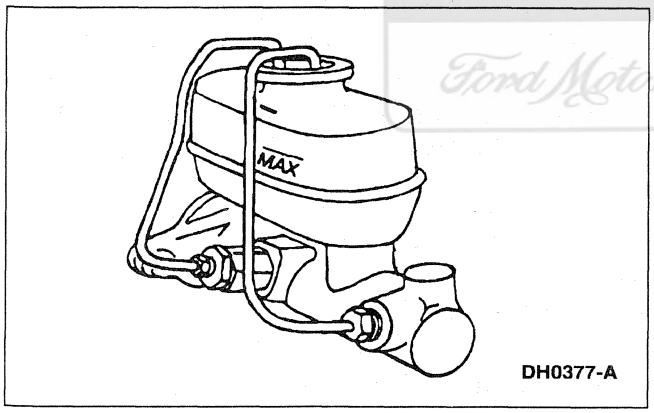

DH0377-A

3. Install short brake tubes with the ends submerged in the brake master cylinder reservoir, and fill the brake master cylinder reservoir with High Performance DOT 3 Brake Fluid C6AZ-19542-AB or equivalent DOT 3 fluid meeting Ford specification ESA-M6C25-A.

4. Have an assistant pump the brake pedal (2455), or slowly depress the primary piston until clear fluid flows from both brake tubes, without air bubbles.

5. If the brake master cylinder is being primed at the bench, install it in the vehicle; refer to Section 206-06.

Official Licensed Product
Ford Motor Company

GENERAL PROCEDURES (Continued)

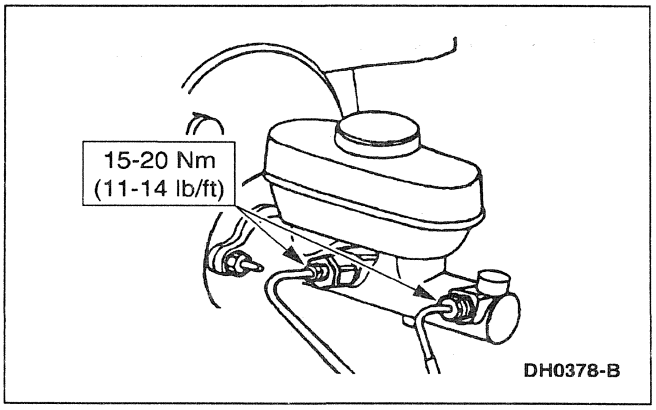

6. Remove the short brake tubes, and install the brake outlet tubes.

7. Bleed each brake tube at the brake master cylinder as follows:
   1 Have an assistant pump the brake pedal, and then hold firm pressure on the brake pedal.
   2 Loosen the rearmost brake tube fittings until a stream of brake fluid comes out. While the assistant maintains pressure on the brake pedal , tighten the brake tube fitting.
   3 Repeat this operation until clear, bubble-free fluid comes out.
   4 Refill the brake master cylinder reservoir as necessary. Repeat the bleeding operation at the front brake tube.

Official Licensed Product
Ford Motor Company

Four Wheel Anti-Lock Brake System (4WABS) Hydraulic Control Unit (HCU)

NOTE: This procedure only needs to be performed if the 4-wheel anti-lock brake (4WABS) hydraulic control unit (HCU) has been replaced or if the HCU lines have been opened.

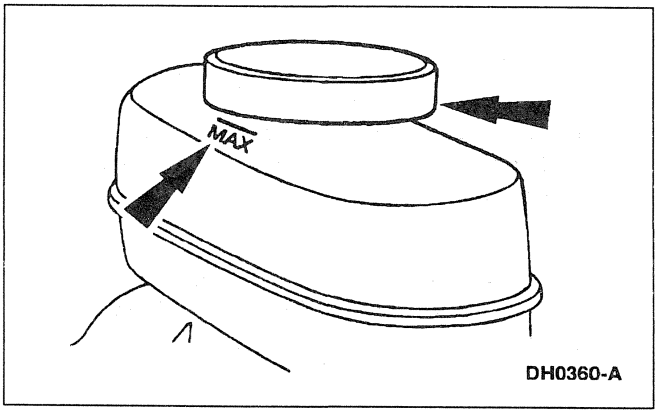

1. Clean all dirt from and remove the brake master cylinder filler cap (2162), and fill the brake master cylinder reservoir with the specified brake fluid.

GENERAL PROCEDURES (Continued)

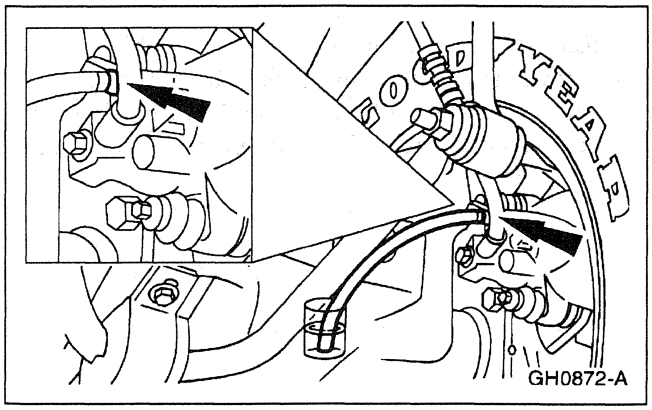

2. Connect a clear waste line to the RH rear bleeder screw and the other end in a container partially filled with recommended brake fluid.

3. Loosen the RH rear bleeder screw until a stream of brake fluid comes out. While the assistance maintains pressure on the brake pedal, tighten the RH rear bleeder screw.
   - Repeat until clear, bubble-free fluid comes out.
   - Refill the brake master cylinder reservoir as necessary.

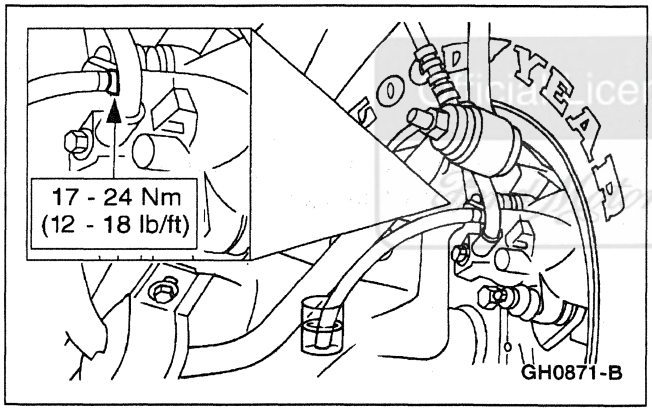

4. Tighten the RH rear bleeder screw, and disconnect the waste line.

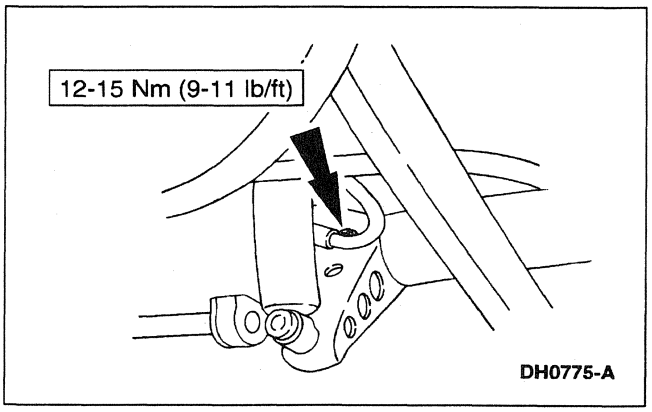

Unlicensed Product

GENERAL PROCEDURES (Continued)

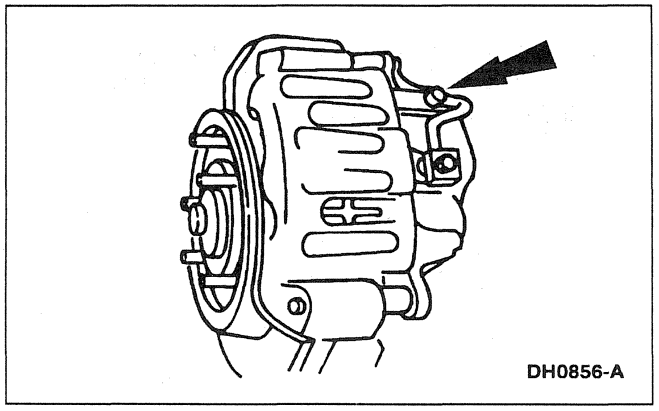
DH0856-A

5. Repeat Steps 2, 3 and 4 for the LH rear bleeder screw, the RH front disc brake caliper bleeder screw, and the LH front disc brake caliper bleeder screw, in that order. Refer to Specifications in this section.

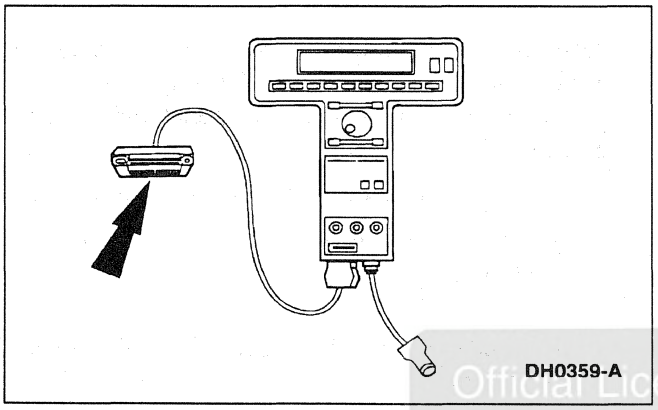
DH0359-A

6. Connect the NGS DCL cable adapter into the vehicle data link connector (DLC) under the dash, and follow the NGS instructions.

Official Licensed Product
Ford Motor Company

7. Repeat the conventional bleed procedure as outlined in Steps 2 through 5.

GENERAL PROCEDURES (Continued)

Bleeding — System

Manual

⚠ WARNING: BRAKE FLUID CONTAINS POLYGLYCOL ETHERS AND POLYGLYCOLS. AVOID CONTACT WITH EYES. WASH HANDS THOROUGHLY AFTER HANDLING. IF BRAKE FLUID CONTACTS EYES, FLUSH EYES WITH RUNNING WATER FOR 15 MINUTES. GET MEDICAL ATTENTION IF IRRITATION PERSISTS. IF TAKEN INTERNALLY, DRINK WATER AND INDUCE VOMITING. GET MEDICAL ATTENTION IMMEDIATELY.

⚠ CAUTION: Do not allow the brake master cylinder reservoir to run dry during the bleeding operation. Keep the brake master cylinder reservoir filled with the specified brake fluid. Never reuse the brake fluid that has been drained from the hydraulic system.

⚠ CAUTION: Brake fluid is harmful to painted and plastic surfaces. If brake fluid is spilled onto a painted or plastic surface, immediately wash it with water.

Official Licensed Product
Ford Motor Company

NOTE: When any part of the hydraulic system has been disconnected for repair or replacement, air may get into the system and cause spongy brake pedal action. This requires bleeding of the hydraulic system after it has been properly connected. The hydraulic system can be bled manually or with pressure bleeding equipment.

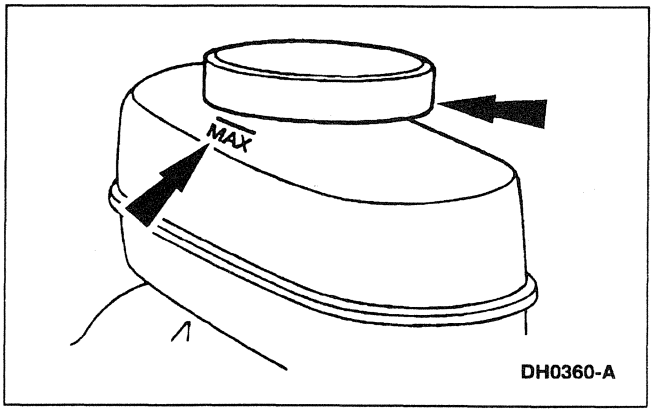

1. Clean all dirt from and remove the brake master cylinder filler cap and fill the brake master cylinder reservoir with the specified brake fluid.

GENERAL PROCEDURES (Continued)

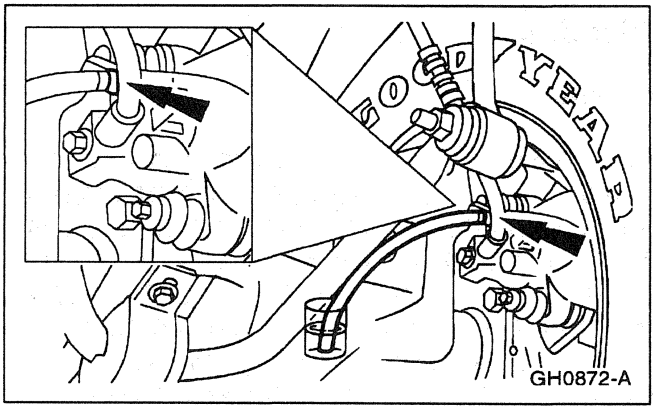

2. Place a box end wrench on the RH rear bleeder screw. Attach a rubber drain tube to the RH rear bleeder screw and submerge the free end of the tube in a container partially filled with clean brake fluid.

3. Have an assistant pump the brake pedal and then hold firm pressure on the brake pedal.

4. Loosen the RH rear bleeder screw until a stream of brake fluid comes out. While the assistant maintains pressure on the brake pedal , tighten the RH rear bleeder screw.
   - Repeat until clear, bubble-free fluid comes out.
   - Refill the brake master cylinder reservoir as necessary.

Official Licensed Product Ford Motor Company

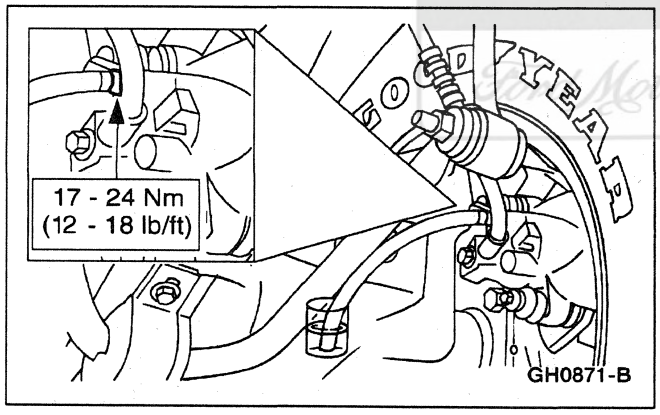

5. Tighten the RH rear bleeder screw.

6. Repeat Steps 2, 3, 4 and 5 for the LH rear bleeder screw.

GENERAL PROCEDURES (Continued)

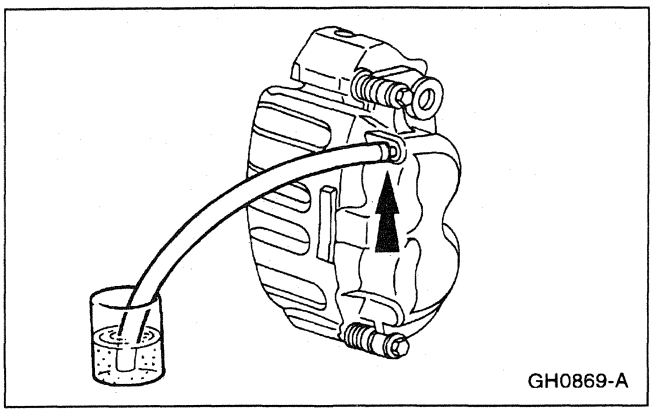
GH0869-A

7. Place a box end wrench on the RH front disc brake caliper bleeder screw. Attach a rubber drain tube to the RH front disc brake caliper bleeder screw, and submerge the free end of the tube in a container partially filled with clean brake fluid.

8. Have an assistant pump the brake pedal and then hold firm pressure on the brake pedal.

9. Loosen the RH front disc brake caliper bleeder screw until a stream of brake fluid comes out. While the assistant maintains pressure on the brake pedal, tighten the RH front disc brake caliper bleeder screw.
   - Repeat until clear, bubble-free fluid comes out.
   - Refill the brake master cylinder reservoir as necessary.

Official Licensed Product
Ford Motor Company

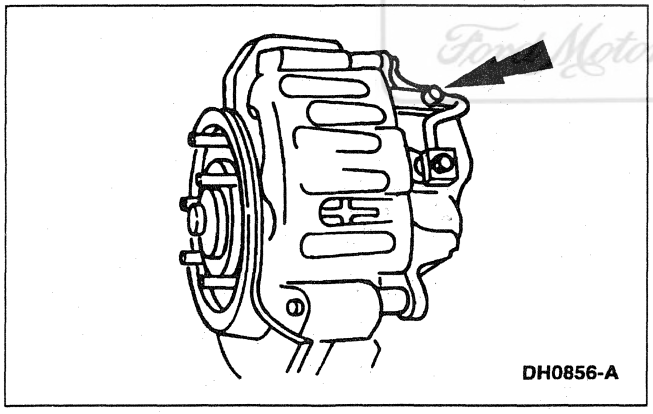
DH0856-A

10. Tighten the RH front disc brake caliper bleeder screw. Refer to Specifications in this section.

11. Repeat Steps 7, 8, 9 and 10 for the LH front disc brake caliper bleeder screw.

GENERAL PROCEDURES (Continued)

Pressure

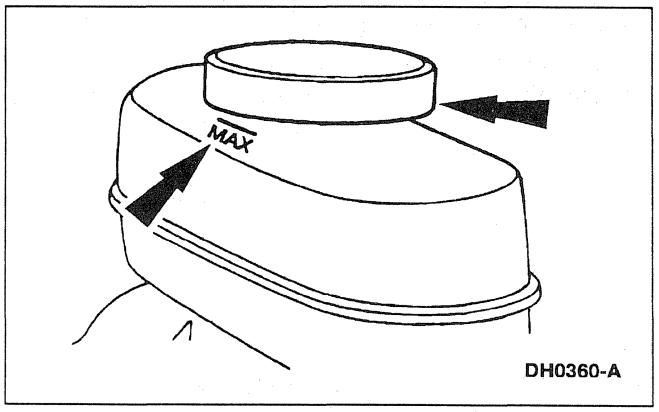

1. Clean all dirt from and remove the brake master cylinder filler cap and fill the brake master cylinder reservoir with the specified brake fluid.

2. **NOTE:** Master cylinder pressure bleeder adapter tools are available from various manufacturers of pressure bleeding equipment. Follow the instructions of the manufacturer when installing the adapter.

   Install the bleeder adapter to the brake master cylinder reservoir, and attach the bleeder tank hose to the fitting on the adapter.

Official Licensed Product

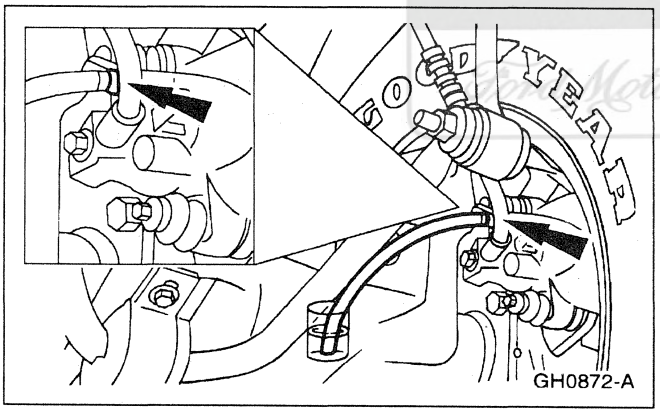

3. **NOTE:** Bleed the longest line first. Make sure the bleeder tank contains enough specified brake fluid to complete the bleeding operation.

   Place a box end wrench on the RH rear bleeder screw. Attach a rubber drain tube to the RH rear bleeder screw, and submerge the free end of the tube in a container partially filled with clean brake fluid.

4. Open the valve on the bleeder tank.

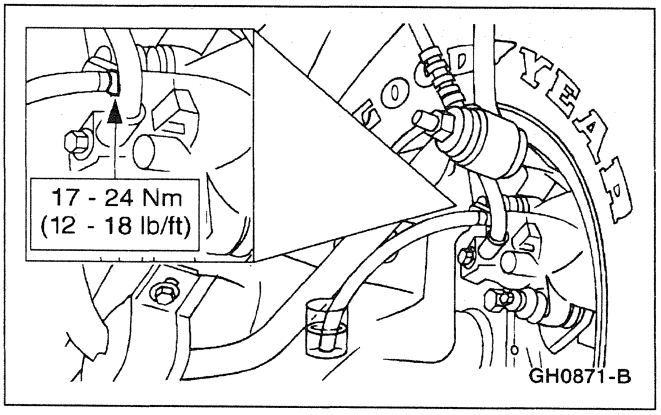

5. Loosen the RH rear bleeder screw. Leave open until clear, bubble-free brake fluid flows, then tighten the RH rear bleeder screw and remove the rubber hose.

GENERAL PROCEDURES (Continued)

6. Continue bleeding the rear of the system, going in order from the LH rear bleeder screw to the RH front disc brake caliper bleeder screw ending with the LH front disc brake caliper bleeder screw.

7. Close the bleeder tank valve. Remove the tank hose from the adapter, and remove the adapter.

Hydraulic Leak Check

1. **NOTE:** Brake fluid is water soluble and it is possible that all evidence of fluid leakage has been washed off if the vehicle has been operated in the rain or snow.

   Make sure the brake master cylinder reservoir is full.

2. Apply the brakes several times and make sure the pedal feel is not spongy. If necessary, bleed the system; refer to Bleeding — System in this section.

Official Licensed Product
Ford Motor Company

3. Verify that the reservoir level is dropping.

4. If the reservoir level is dropping, inspect the brake components, fittings and lines to locate the source of the leak.

5. Correct the leak as necessary and retest the system for normal operation.

SPECIFICATIONS

General Specifications

Item	Specification
Disc Brake Lining Wear Limit (Above Backing Plate or Rivets)	1.0 (0.040)
Disc Brake Lining Wear Limit (Above Brake Shoe or Rivets)	0.8 (0.03125)
Lubricant	
High Performance DOT 3 Brake Fluid C6AZ-19542-AB	ESA-M6C25-A DOT 3

(Continued)

General Specifications

Item	Specification
Disc Brakes	
Rotor Minimum Thickness	Molded into the Rotor
Rotor Maximum Runout	0.076 (0.003)
Rotor Maximum Thickness Variation	0.010 (0.0004)
Drum Brake	
Brake Drum Maximum Inside Diameter	Molded into the Brake Drum

mm (inches) unless otherwise specified

SPECIFICATIONS (Continued)

Torque Specifications

Description	Nm	Lb/Ft	Lb/In
Brake Master Cylinder Tube Fitting	15-20	11-14	—
Caliper Bleeder Screw, Rear	17-24	12-18	—

(Continued)

Torque Specifications

Description	Nm	Lb/Ft	Lb/In
Caliper Bleeder Screw, Front	12-18	9-13	—
Wheel Caliper Bleeder Screw	7-9	—	62-79

Official Licensed Product
Ford Motor Company

SECTION 206-03 Front Disc Brake

VEHICLE APPLICATION: Mark VIII

SUBJECT	PAGE
DESCRIPTION AND OPERATION	
Front Disc Brake	206-03-2
DIAGNOSIS AND TESTING	
Front Disc Brake	206-03-2
REMOVAL AND INSTALLATION	
Anchor Plate	206-03-9
Caliper	206-03-6
Pads	206-03-3
Rotor	206-03-10
Rotor Shield	206-03-11
DISASSEMBLY AND ASSEMBLY	
Caliper	206-03-12
SPECIFICATIONS	206-03-14

Official Licensed Product
Ford Motor Company

DESCRIPTION AND OPERATION

Front Disc Brake

Front Disc Brake Components

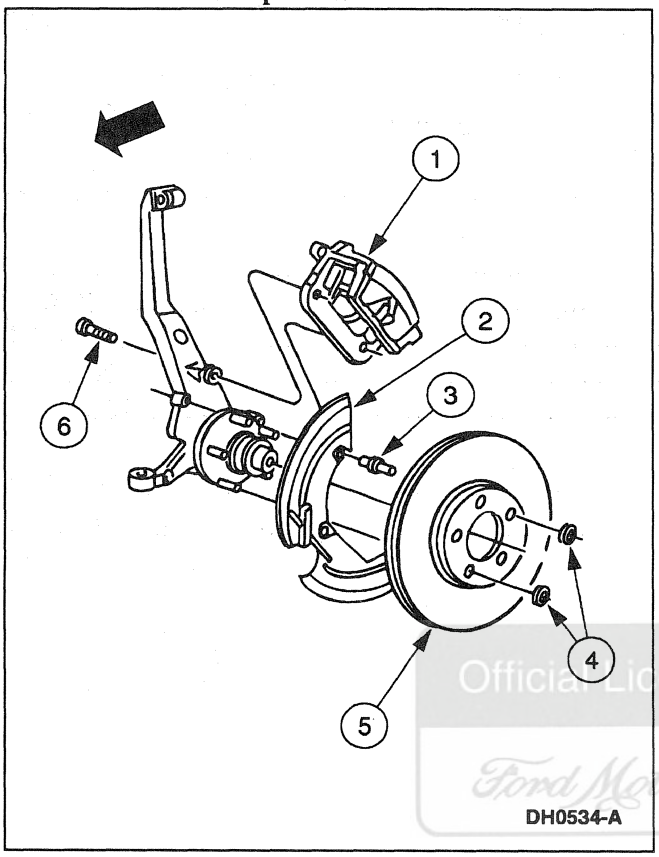

Item	Part Number	Description
1	2B120	Disc Brake Caliper
2	2K005	Front Disc Brake Rotor Shield

(Continued)

Item	Part Number	Description
3	N811090-S100	Rivet (3 Req'd)
4	W623485-S2	Nut, Push On (2 Req'd)
5	1125	Front Disc Brake Rotor
6	N807146-S101	Caliper Anchor Plate Bolt (2 Req'd)

The front disc brake caliper (2B120) :

- bolts to the front wheel spindle (3105) .
- is a disc brake caliper locating pin (2B296) single piston design.
- has a fluid inlet at the center of the caliper housing bore.

The front disc brake rotors (1125) :

- are of a ventilated full-cast design, with non-directional cooling fins.
- are mounted to wheel hub (1104) .
- are serviced with disc brake caliper and front disc brake caliper anchor plate (2B292) removed.

The front disc brake rotor shield (2K005) :

- is riveted to the front wheel spindle .
- protects the front wheel bearings and inboard surface of the front disc brake rotor .

The pads:

- are housed in the front disc brake caliper anchor plate .
- are of a non-asbestos, non-metallic composition.

Official Licensed Product
Ford Motor Company

DIAGNOSIS AND TESTING

Front Disc Brake

Refer to Section 206-00.

REMOVAL AND INSTALLATION

Pads

Removal

1. Remove the brake master cylinder filler cap (2162) . Check the brake fluid level in the brake master cylinder reservoir (2K478) . Remove and discard fluid until the brake master cylinder reservoir is half full.

2. **WARNING: THE ELECTRICAL POWER TO THE AIR SUSPENSION SYSTEM MUST BE SHUT OFF PRIOR TO HOISTING, JACKING OR TOWING AN AIR SUSPENSION VEHICLE. THIS CAN BE ACCOMPLISHED BY TURNING OFF THE AIR SUSPENSION SWITCH LOCATED IN THE LUGGAGE COMPARTMENT. FAILURE TO DO TO CAN RESULT IN UNEXPECTED INFLATION OR DEFLATION OF THE AIR SPRINGS, WHICH CAN RESULT IN SHIFTING OF THE VEHICLE DURING THESE OPERATIONS.**
   Raise and support the vehicle; refer to Section 100-02.

3. Remove wheel and tire assemblies; refer to Section 204-04.

4. Remove the upper disc brake caliper bolt.

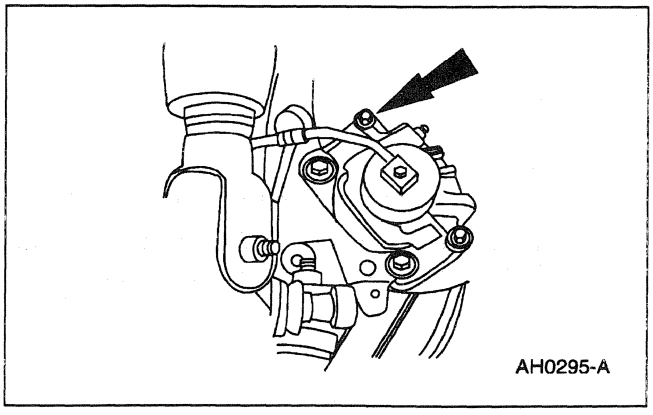

Official Licensed Ford Motor Company

REMOVAL AND INSTALLATION (Continued)

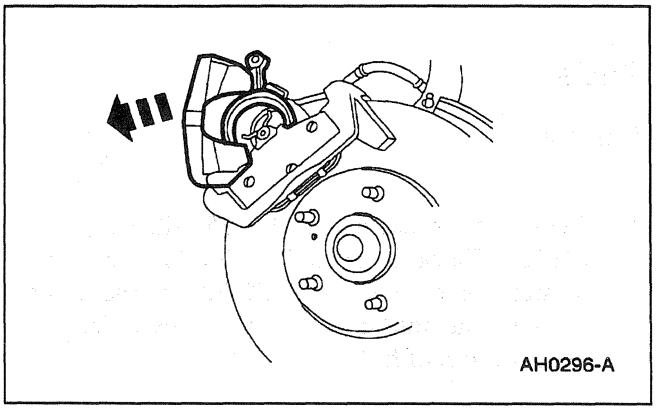

5. Rotate the disc brake caliper (2B120) upward.

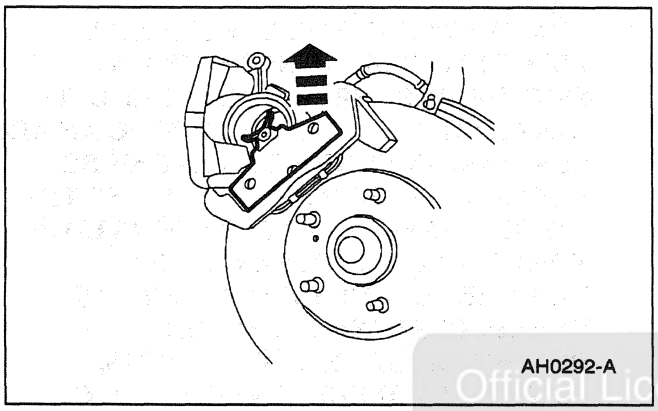

6. Remove the pads.

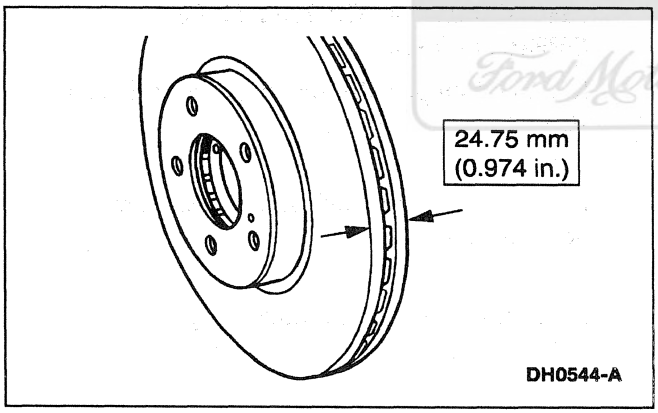

7. Measure the front disc brake rotor (1125) thickness.
   - Replace the front disc brake rotor if not within specification; refer to Rotor in this section.

8. If necessary, resurface the front disc brake rotor.
   - Ford recommends on-vehicle rotor machining. Follow lathe manufacturer's instructions.

Official Licensed Product
Ford Motor Company

REMOVAL AND INSTALLATION (Continued)

Installation

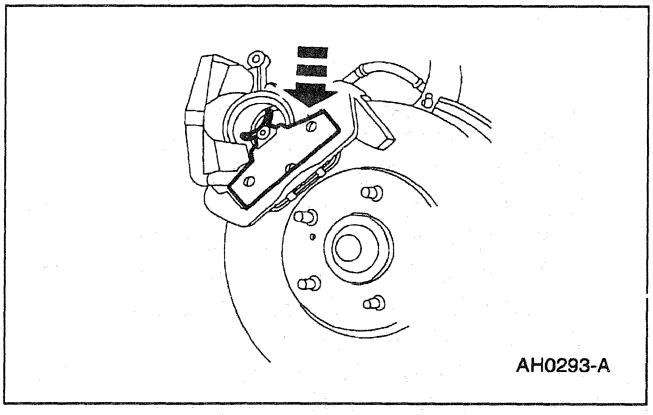

1. Position the pads in the caliper anchor plate.

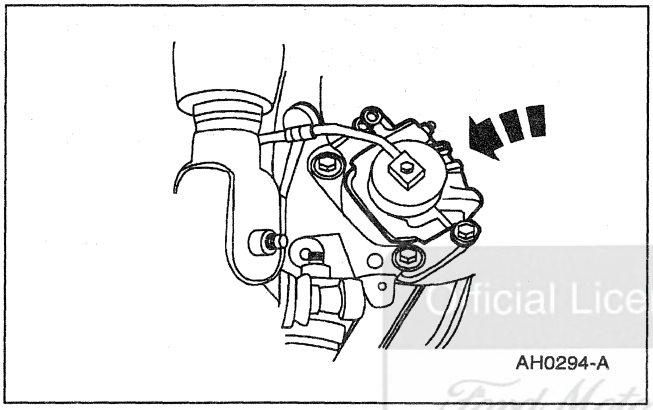

2. Rotate the disc brake caliper over the pads.

Official Licensed Product
Ford Motor Company

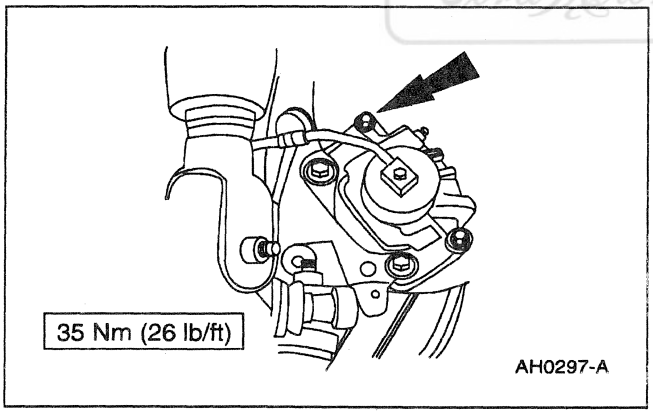

3. Install the disc brake caliper bolt.

4. Install the wheel and tire assemblies; refer to Section 204-04.

5. Pump the brakes and inspect fluid level.

6. Add fluid as necessary.

7. Install the brake master cylinder filler cap .

REMOVAL AND INSTALLATION (Continued)

Caliper

Removal

1. **WARNING: THE ELECTRICAL POWER TO THE AIR SUSPENSION SYSTEM MUST BE SHUT OFF PRIOR TO HOISTING, JACKING OR TOWING AN AIR SUSPENSION VEHICLE. THIS CAN BE ACCOMPLISHED BY TURNING OFF THE AIR SUSPENSION SWITCH LOCATED IN THE TRUNK. FAILURE TO DO SO CAN RESULT IN UNEXPECTED INFLATION OR DEFLATION OF THE AIR SPRINGS, WHICH CAN RESULT IN SHIFTING OF THE VEHICLE DURING THESE OPERATIONS.**

   Raise and support the vehicle; refer to Section 100-02.

2. Remove the wheel and tire assembly; refer to Section 204-04.

Official Licensed Product
Ford Motor Company

REMOVAL AND INSTALLATION (Continued)

WARNING: ASBESTOS FIBER DUST CAN BE PRESENT ON BRAKE AND CLUTCH ASSEMBLIES AND IS HAZARDOUS TO HEALTH IF INHALED.

BRAKE AND CLUTCH ASSEMBLIES MUST BE CLEANED USING A VACUUM CLEANER RECOMMENDED FOR USE WITH ASBESTOS FIBERS, SUCH AS A BRAKE/CLUTCH/SERVICE VACUUM. THE BAG MUST BE LABELED IN ACCORDANCE WITH OSHA INSTRUCTIONS, SEALED, AND THE TRASH HAULER NOTIFIED AS TO THE BAG'S CONTENTS.

IF A VACUUM SUITABLE FOR ASBESTOS IS NOT AVAILABLE, CLEANING MUST BE DONE WET. IF DUST GENERATION IS STILL POSSIBLE, TECHNICIANS MUST WEAR GOVERNMENT-APPROVED TOXIC DUST PURIFYING RESPIRATORS.

THE OCCUPATIONAL HEALTH AND SAFETY ACT (OSHA) REQUIRES AREAS WHERE ASBESTOS DUST GENERATION IS POSSIBLE TO BE ISOLATED AND POSTED WITH WARNING SIGNS. ONLY TECHNICIANS PERFORMING BRAKE OR CLUTCH REPAIR ARE TO BE PRESENT IN THE AREA.

Official Licensed Product
Ford Motor Company

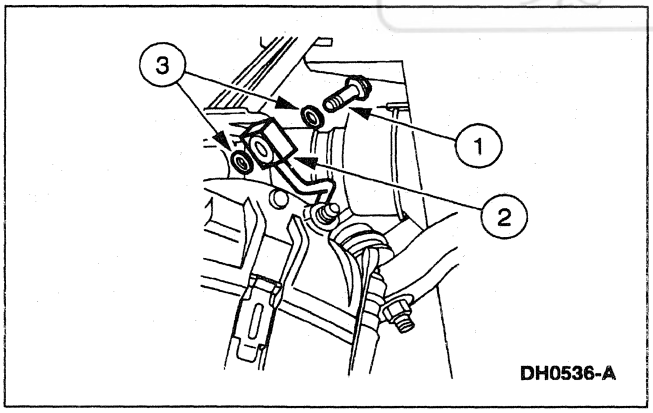

3. **WARNING: BRAKE FLUID CONTAINS POLYGLYCOL ETHERS AND POLYGLYCOLS. AVOID CONTACT WITH EYES. WASH HANDS THOROUGHLY AFTER HANDLING. IF BRAKE FLUID CONTACTS EYES, FLUSH EYES WITH RUNNING WATER FOR 15 MINUTES. GET MEDICAL ATTENTION IF IRRITATION PERSISTS. IF TAKEN INTERNALLY, DRINK WATER AND INDUCE VOMITING. GET MEDICAL ATTENTION IMMEDIATELY.**

   CAUTION: Brake fluid is harmful to painted and plastic surfaces. If brake fluid is spilled onto a painted or plastic surface, immediately wash it with water.

   Disconnect the front brake hose (2078) .

   1 Remove the front brake hose bolt.

   2 Disconnect the front brake hose .

   3 Remove and discard the copper washers. Plug the front brake hose .

REMOVAL AND INSTALLATION (Continued)

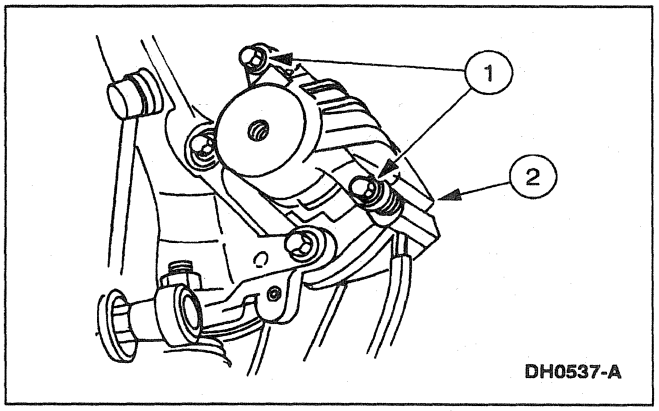

4. Remove the disc brake caliper (2B120) .
   1 Remove the disc brake caliper bolts.
   2 Lift the disc brake caliper off the front disc brake caliper anchor plate (2B292) .

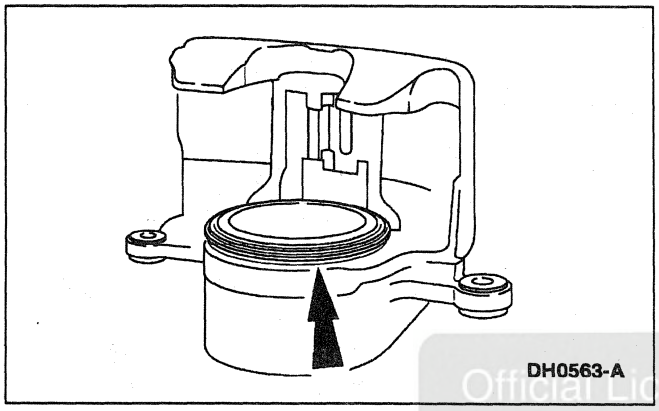

5. Inspect the disc brake caliper for leaks.
   - If leaks are found, disassembly is required; refer to Caliper in this section.

Official Licensed Product
Ford Motor Company

Installation

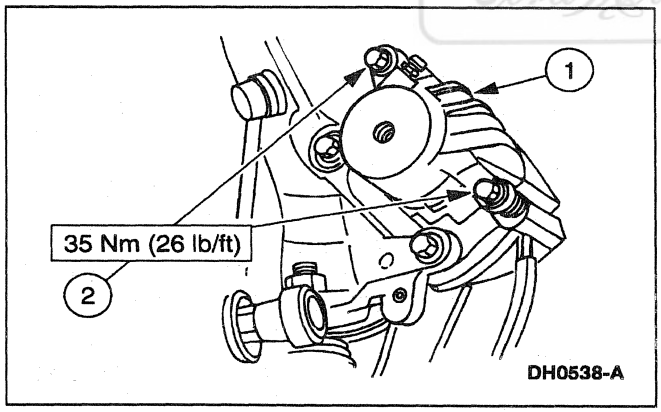

1. Install the disc brake caliper .
   1 Install the disc brake caliper .
   2 Install the disc brake caliper bolts.
   - Clean and lubricate the disc brake caliper bolts using Silicone Brake Caliper Grease and Dielectric Compound D7AZ-19A331-A (Motorcraft WA-10) or an equivalent silicone compound meeting Ford specification ESE-M1C171-A.

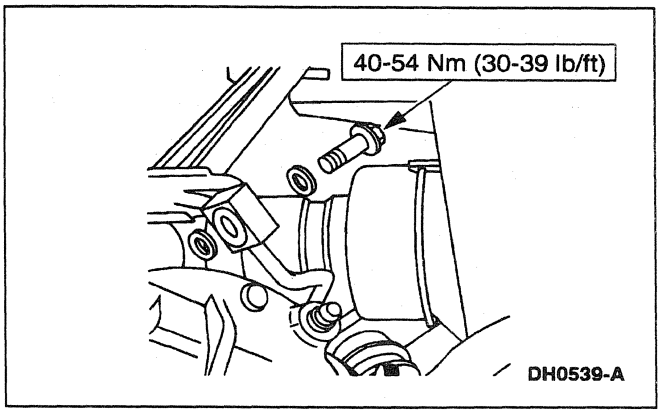

2. Install the front brake hose .
   - Use new copper washers; connect the front brake hose .
   - Install the front brake hose bolt.

REMOVAL AND INSTALLATION (Continued)

3. Bleed the disc brake caliper ; refer to Section 206-00.

4. **NOTE:** If equipped with air suspension, reactivate the system by turning on the air suspension switch.

   Install the wheel and tire assembly; refer to Section 204-04.

5. Inspect the brake system operation.

Anchor Plate

Removal

1. Remove the pads; refer to Pads in this section.

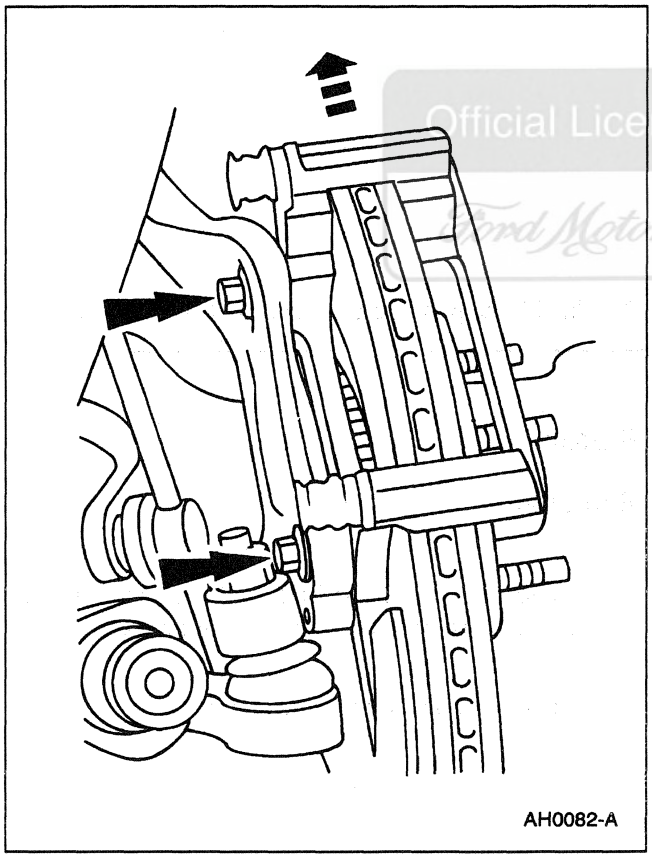

2. Remove the front disc brake caliper anchor plate (2B292) .
   - Remove the front disc brake caliper anchor plate bolts.
   - Remove the front disc brake caliper anchor plate .

Official Licensed Product
Ford Motor Company

REMOVAL AND INSTALLATION (Continued)

Installation

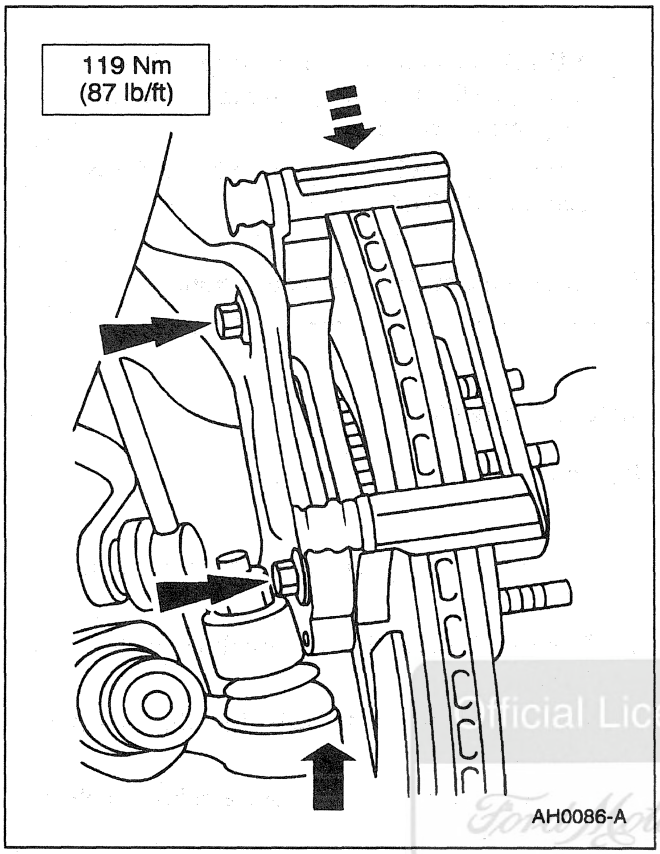

1. **NOTE:** It is important to use correct bolts (M12 x 1.75 g property class 10.9, 30 mm long).
   Install new front disc brake caliper/front disc brake caliper anchor plate mounting bolts through the front wheel spindle (3105) and hand-start.
   Install the front disc brake caliper anchor plate .

Official Licensed Product
Ford Motor Company

2. Install the pads; refer to Pads in this section.

Rotor

Removal

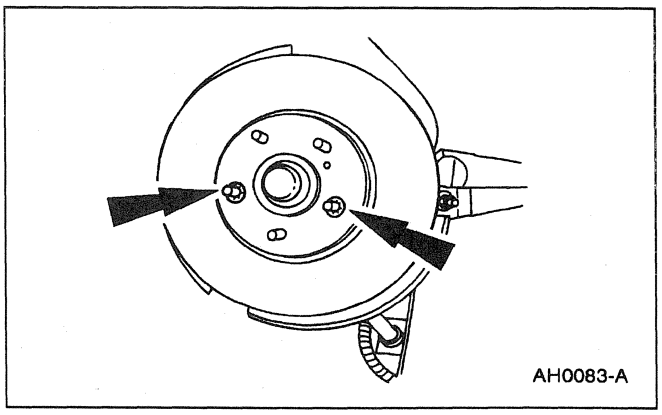

1. Remove the front disc brake caliper anchor plate (2B292) ; refer to Anchor Plate in this section.

2. Remove rotor retaining pushnuts.

REMOVAL AND INSTALLATION (Continued)

3. Locate the yellow-marked lug bolt and mark the corresponding disc brake rotor lug hole. This ensures the lowest front disc brake rotor runout is maintained.

4. Remove the front disc brake rotor (1125) .

Installation

1. Position the front disc brake rotor to the wheel hub. Make sure the wheel hub (1104) and front disc brake rotor braking and mounting surfaces are clean and indexed to the yellow marks.
   - Use Metal Brake Parts Cleaner F3AZ-19579-SA or equivalent to clean the front disc brake rotor .
   - Apply High Temperature Nickel Anti-Seize Lubricant F6AZ-9L494-AA or equivalent meeting Ford specification ESE-M12A4-A to the mating surfaces of the hub and rotor.

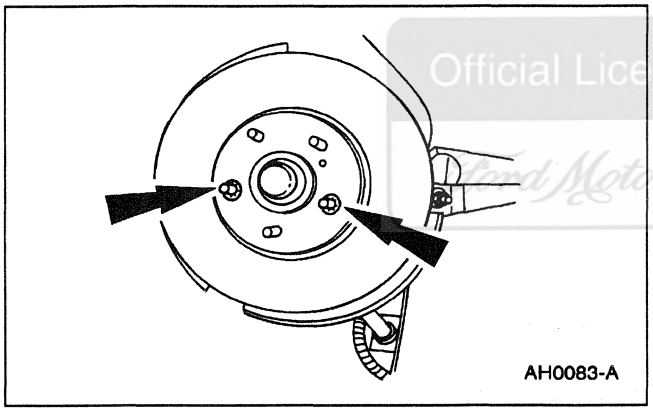

Official Licensed Product
Ford Motor Company

2. Install two pushnuts on opposing lug bolts.

3. Install the front disc brake caliper anchor plate ; refer to Anchor Plate in this section.

Rotor Shield

Removal

1. Remove the rotor; refer to Rotor in this section.

REMOVAL AND INSTALLATION (Continued)

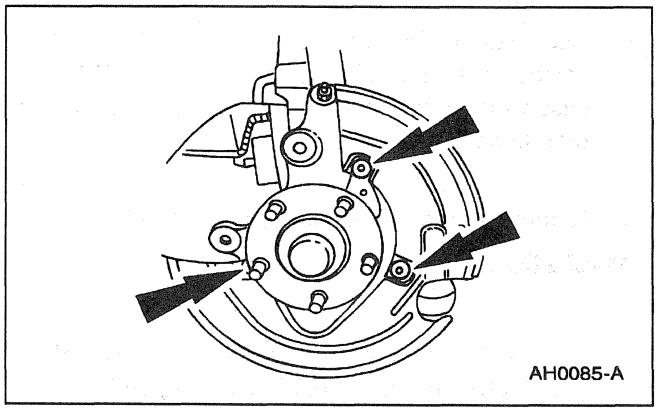

2. Remove the front disc brake rotor shield (2K005) .
   1 Drill out three front disc brake rotor shield rivets.
   2 Remove front disc brake rotor shield .

Installation

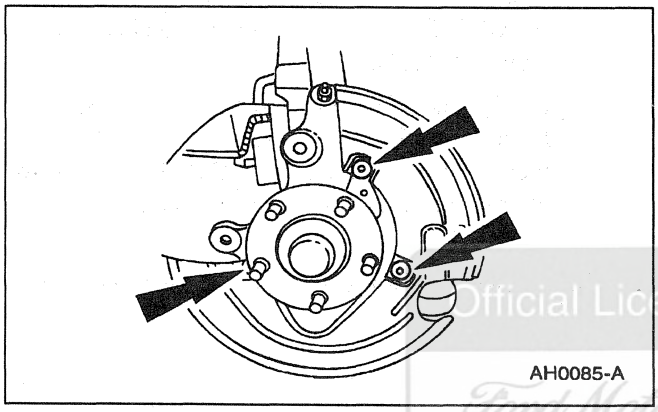

1. Follow the removal procedure in reverse order.
   - Secure with three rivets.

Official Licensed Product
Ford Motor Company

DISASSEMBLY AND ASSEMBLY

Caliper

Disassembly

1. Remove the disc brake caliper (2B120) ; refer to Caliper in this section.
2. Drain brake fluid from the disc brake caliper .
3. Secure the disc brake caliper in a vise.

DISASSEMBLY AND ASSEMBLY (Continued)

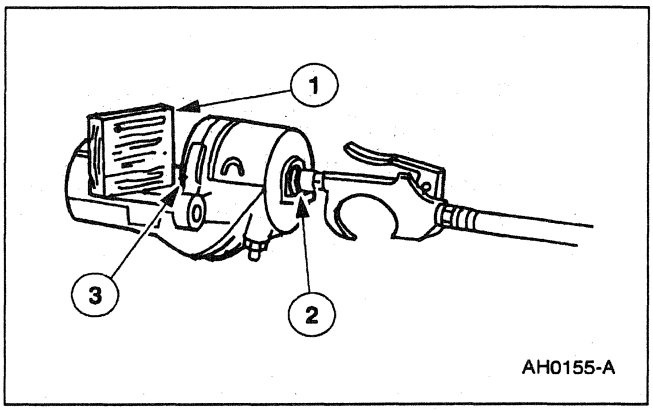

4. Remove the caliper piston (2196) .
   1 Place a wood block between the caliper bridge and the caliper piston .
   2 Apply low air pressure to the fluid port of the disc brake caliper .
   3 Force the caliper piston out to the wood block. Remove the wood block and the caliper piston

5. Remove and discard the caliper piston seals and dust boots.

6. **NOTE:** Do not hone the caliper bores. Caliper pistons are not available for honed calipers.
   If the front disc brake calipers are leaking, replace the caliper seal kits. If the caliper bores are damaged, replace the front disc brake caliper.

Assembly

Official Licensed Product
Ford Motor Company

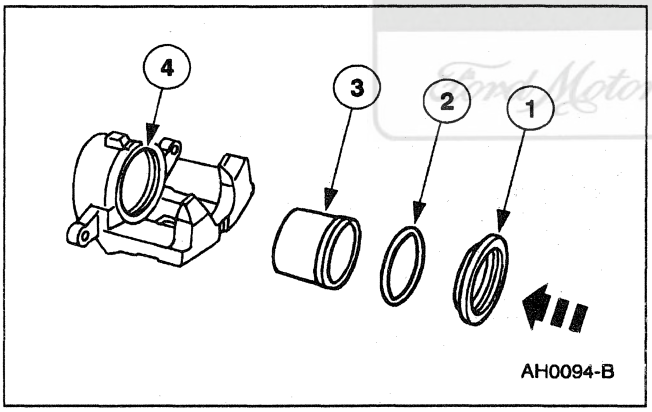

1. ⚠ **CAUTION: Do not reuse piston seals or dust boots. Damage to the vehicle can occur.**
   NOTE: Use new brake fluid for assembly and bleeding of the brake system.
   Lubricate with High Performance DOT 3 Motor Vehicle Brake Fluid C6AZ-19542-AB or DOT 3 equivalent meeting Ford specification ESA-M6C25-A, DOT 3, the following brake system components:
   1 Piston dust boot.
   2 Piston seal.
   3 Caliper piston .
   4 Caliper bore.

DISASSEMBLY AND ASSEMBLY (Continued)

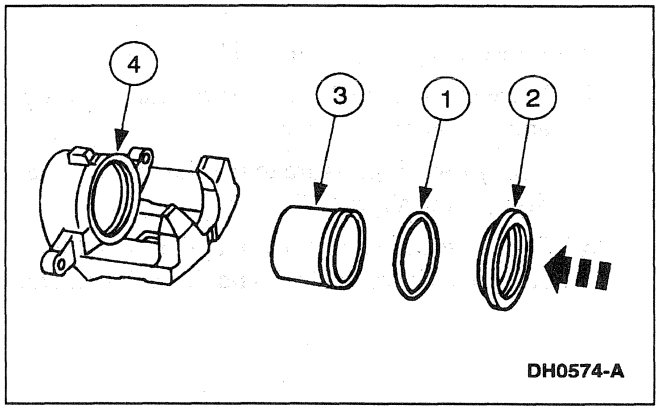

2. Install the caliper piston .
   1 Install the caliper piston seal.
   2 Install the caliper piston dust boot.
   3 **CAUTION: Use care when installing the caliper piston, or damage to the caliper piston seal or dust boot may occur.**
   Install the caliper piston into the caliper bore.
   4 Press the caliper piston into the caliper bore. Use even pressure while making sure the piston does not cock.
3. Install the disc brake caliper ; refer to Caliper in this section.

SPECIFICATIONS

General Specifications

Item	Specification
Rotor	
Nominal Thickness	26.0 mm (1.024 Inches)
Minimum Thickness[a]	24.75 mm (0.974 Inch)
Diameter	294 mm (11.57 Inches)
Allowable Runout on Vehicle	0.076 mm (0.003 Inch) Max.
Finish	0.4-3.2 micrometers (16-126 Micro-Inches)
Thickness Variation	0.009 mm (0.00035 Inch) Max.
Pad	
Minimum Thickness Above Metal Backing Plate or Rivets	1 mm (.039 Inch)
Caliper	
Cylinder Bore Diameter	66 mm (2.598 Inches)
Fluid	
High Performance Motor Vehicle DOT 3 Brake Fluid C6AZ-19542-AB	ESA-M6C25-A

(Continued)

General Specifications

Item	Specification
Lubricant	
Silicone Brake Caliper Grease and Dielectric Compound D7AZ-19A331-A	ESE-M1C171-A
High Temperature Nickel Anti-Seize Lubricant F6AZ-9L494-AA	ESE-M12A4-A
Cleaner	
Metal Brake Parts Cleaner F3AZ-19579-SA	—

a Minimum safe thickness is shown on each rotor.

Torque Specifications

Description	Nm	Lb/Ft
Brake Hose Bolt	40-54	30-39
Front Disc Brake Caliper Anchor Plate Bolt	119	87
Disc Brake Caliper Bolts	35	26

Official Licensed Product

SECTION 206-04 Rear Disc Brake

VEHICLE APPLICATION: Mark VIII

SUBJECT	PAGE
DESCRIPTION AND OPERATION	
Rear Disc Brake	206-04-2
DIAGNOSIS AND TESTING	
Rear Disc Brake	206-04-4
REMOVAL AND INSTALLATION	
Caliper	206-04-4
Pads	206-04-8
Rotor	206-04-10
Shield	206-04-12
Support Bracket	206-04-11
DISASSEMBLY AND ASSEMBLY	
Caliper	206-04-13
SPECIFICATIONS	206-04-16

Official Licensed Product
Ford Motor Company

DESCRIPTION AND OPERATION

Rear Disc Brake

WARNING: BRAKE FLUID CONTAINS POLYGLYCOL ETHERS AND POLYGLYCOLS. AVOID CONTACT WITH EYES. WASH HANDS THOROUGHLY AFTER HANDLING. IF BRAKE FLUID CONTACTS EYES, FLUSH EYES WITH RUNNING WATER FOR 15 MINUTES. GET MEDICAL ATTENTION IF IRRITATION PERSISTS. IF TAKEN INTERNALLY, DRINK WATER AND INDUCE VOMITING. GET MEDICAL ATTENTION IMMEDIATELY.

The rear disc brake system includes the components shown in the following illustration.

Official Licensed Product
Ford Motor Company

DESCRIPTION AND OPERATION (Continued)

Rear Disc Brake System Components

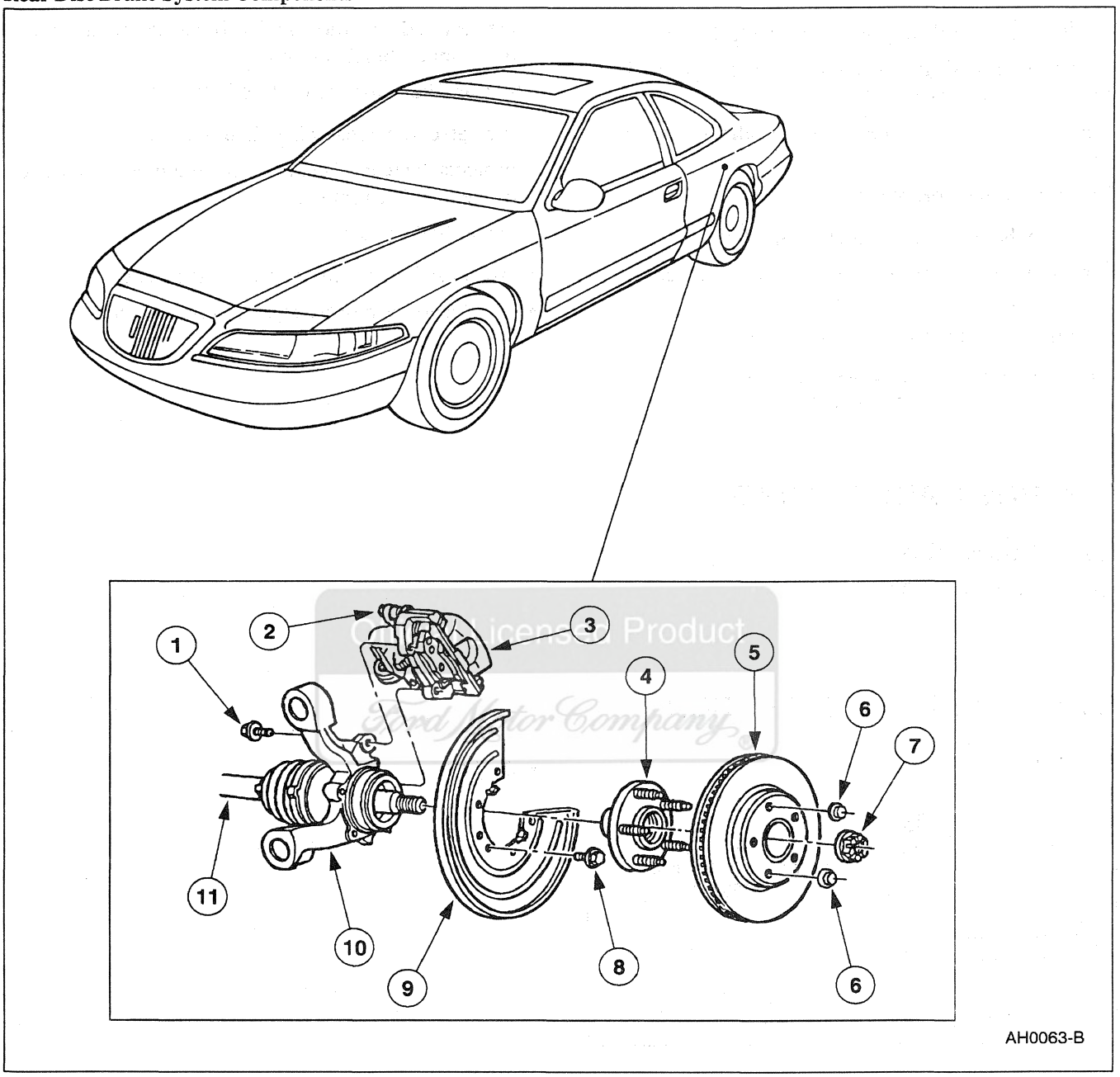

Item	Part Number	Description
1	N807146-S102	Bolt (2 Req'd)
2	2N386	Rear Brake Pin Retainer (2 Req'd)
3	2K327 (RH) 2K328 (LH)	Rear Disc Brake Caliper
4	1109	Rear Hub
5	2C026	Rear Disc Brake Rotor

(Continued)

Item	Part Number	Description
6	W623485-S2	Nut, Push On (2 Req'd)
7	4B477	Rear Axle Wheel Hub Retainer
8	N805453-S1100	Bolt (3 Req'd)
9	2C028	Rear Wheel Disc Brake Shield
10	5A968 (RH) 5A969 (LH)	Rear Wheel Knuckle
11	3A329	Halfshaft

DESCRIPTION AND OPERATION (Continued)

The rear disc brake caliper (2553) :

- bolts to the rear disc support bracket (2B511).
- is a slider pin, single piston with a cable-operated parking brake design.
- has a fluid inlet at the center of the caliper housing bore.

The rear disc support bracket :

- bolts to the rear wheel knuckle (5A969).
- transmits torque from the brake pads to the rear wheel knuckle.

The rear disc brake rotors (2C026) :

- are of a ventilated, full-cast design, with non-directional cooling fins.
- are mounted to the rear hub (1109).
- are serviced with the rear disc brake caliper and rear disc support bracket removed.

The rear wheel disc brake shield (2C028) :

- is riveted to the rear wheel knuckle.
- protects the rear wheel bearings and inboard surface of the rear disc brake rotor.

The rear brake pads:

- are housed in the rear disc support bracket.
- are of a non-asbestos, organic composition.

DIAGNOSIS AND TESTING

Rear Disc Brake

Refer to Section 206-00.

Official Licensed Product
Ford Motor Company

REMOVAL AND INSTALLATION

Caliper

Special Tool(s)

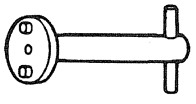 ST1112-A	Rear Caliper Piston Adjuster 206-026 (T87P-2588-A)

REMOVAL AND INSTALLATION (Continued)

Removal

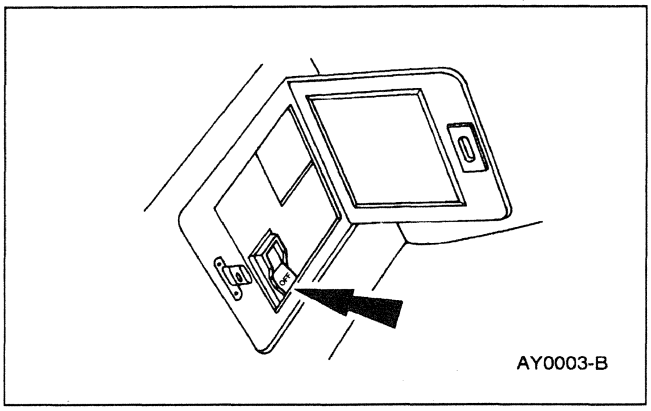

1. Turn the air suspension switch off.

2. Raise the vehicle on a hoist; refer to Section 100-02.

3. Remove the wheel and tire assembly; refer to Section 204-04.

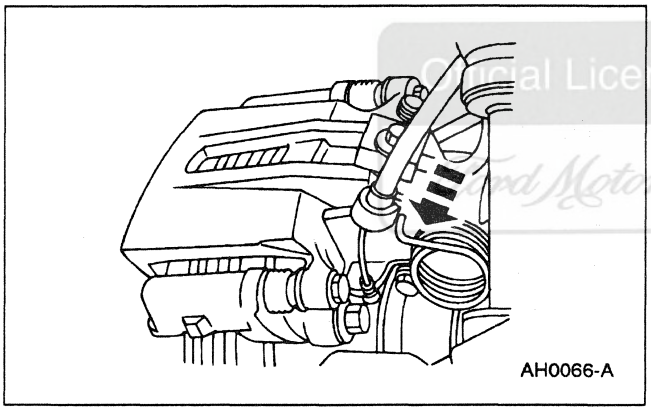

4. Release tension from the parking brake rear cable and conduit (2A635) and disconnect the parking brake rear cable and conduit.

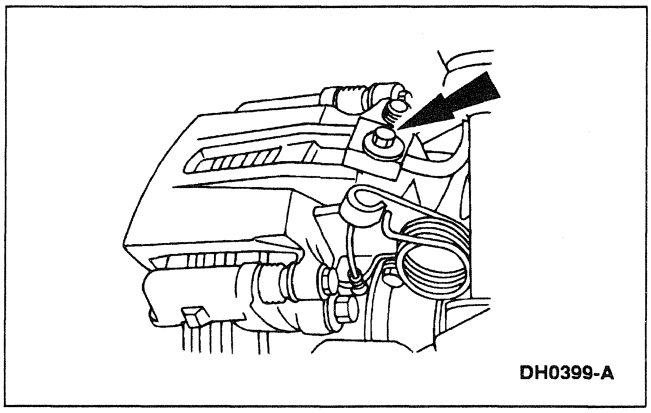

5. Remove the rear disc brake caliper flow bolt.

Ford Motor Company

REMOVAL AND INSTALLATION (Continued)

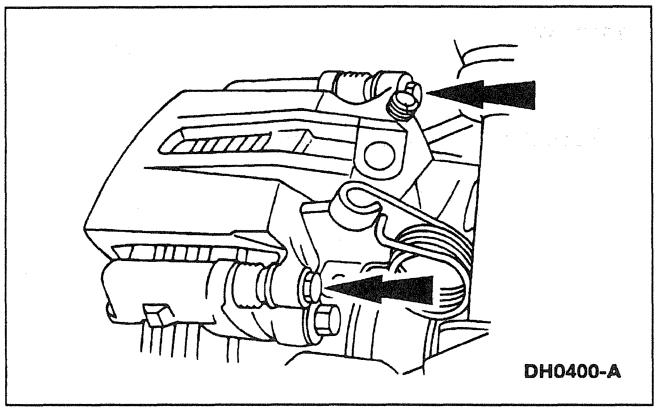

6. Remove the rear brake pin retainer (2N386) and rear disc brake caliper (2552).

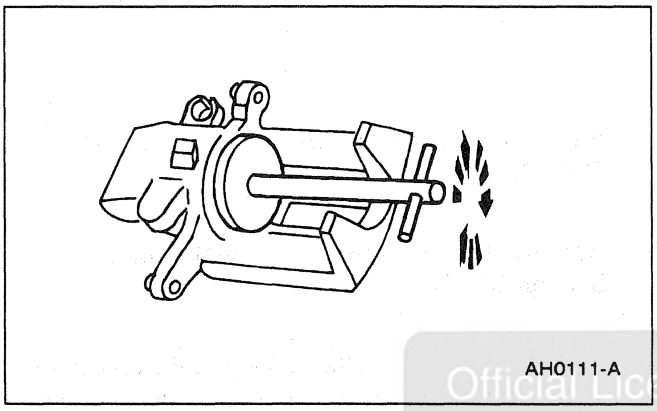

7. Compress the rear disc brake piston and adjuster (2B588) into the rear disc brake caliper using Rear Caliper Piston Adjuster.

Official Licensed Product
Ford Motor Company

Installation

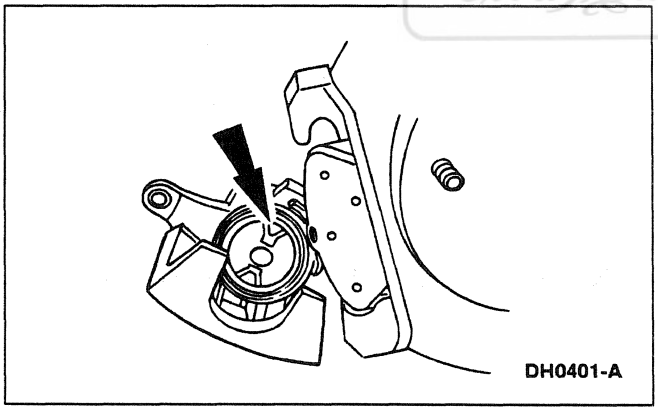

1. **NOTE:** Make sure the nib on the brake pad is engaged on the rear disc brake piston and adjuster.
   Install the rear disc brake caliper.

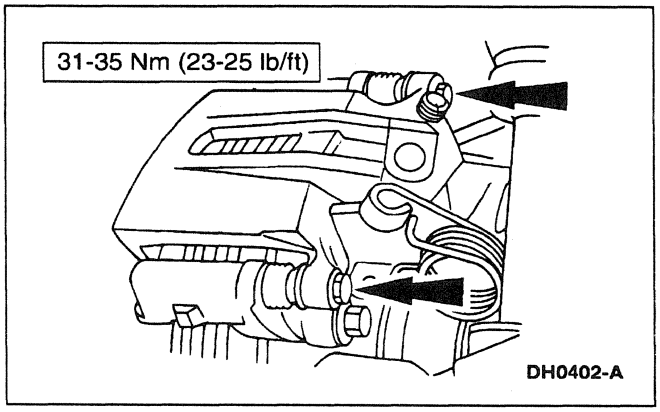

2. Tighten the rear brake pin retainer .

REMOVAL AND INSTALLATION (Continued)

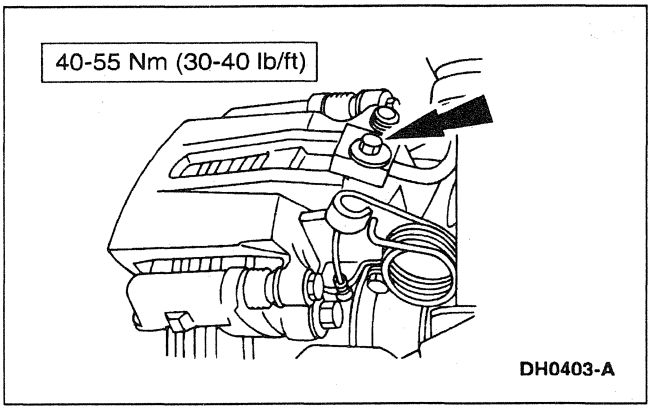

3. Install the rear disc brake caliper flow bolt.

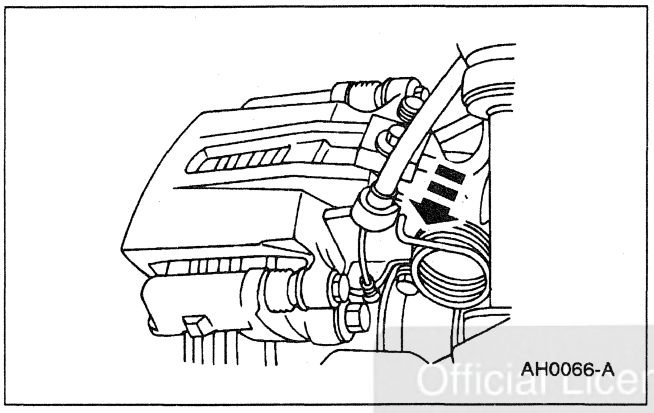

4. Install the parking brake rear cable and conduit.

Official Licensed Product
Ford Motor Company

5. Bleed the brake system; refer to Section 206-00.
6. Install the rear wheel and tire assemblies; refer to Section 204-04.
7. Lower the vehicle.

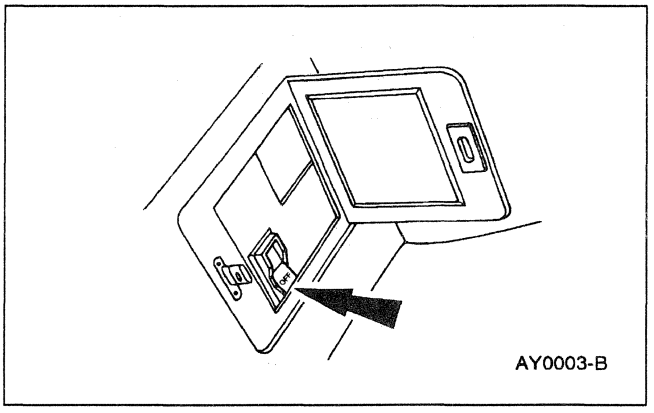

8. Turn the air suspension switch on.

REMOVAL AND INSTALLATION (Continued)

Pads

Special Tool(s)

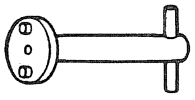 ST1112-A	Rear Caliper Piston Adjuster 206-026 (T87P-2588-A)

Removal

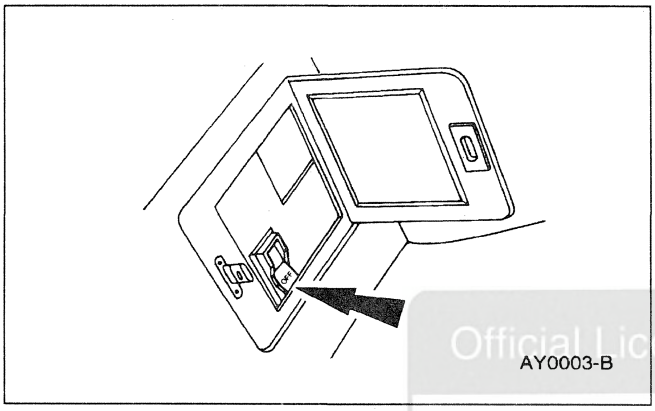

1. Turn the air suspension switch off.

Official Licensed Product
Ford Motor Company

2. Raise and support the vehicle; refer to Section 100-02.

3. Remove the wheel and tire assembly; refer to Section 204-04.

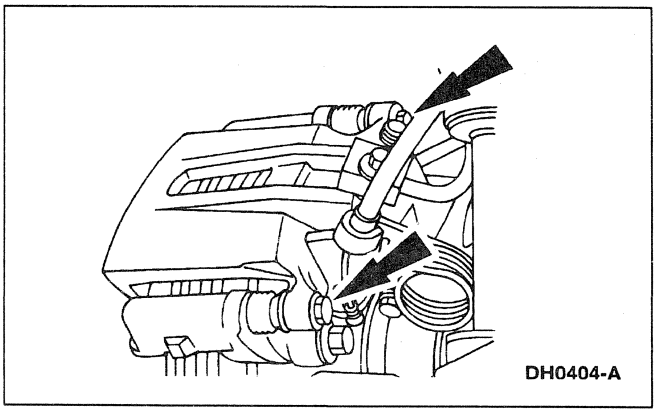

4. ⚠ **CAUTION: Do not allow the rear disc brake caliper (2552) to hang by the rear wheel brake hose (2A442).**

   Remove the rear brake pin retainers (2N386) and position the rear disc brake caliper out of the way.

REMOVAL AND INSTALLATION (Continued)

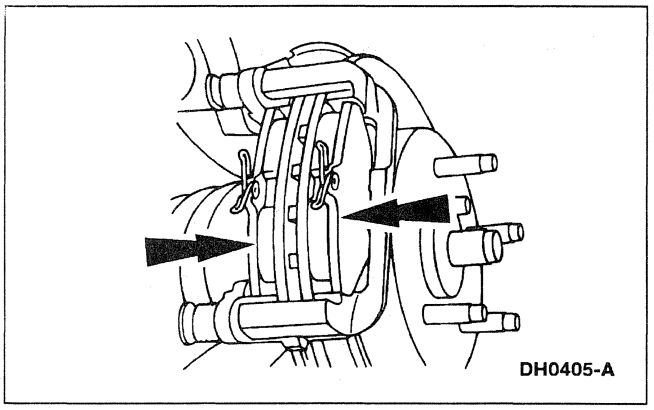

5. Remove the brake pads.

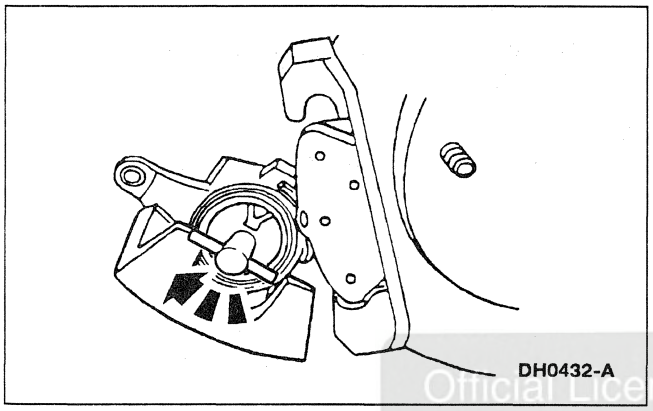

6. Compress the rear disc brake piston and adjuster (2B588) into the rear disc brake caliper using Rear Caliper Piston Adjuster.

Official Licensed Product
Ford Motor Company

Installation

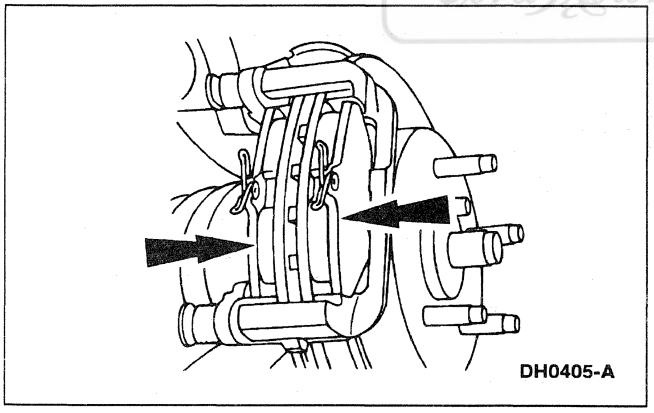

1. Install the brake pads.

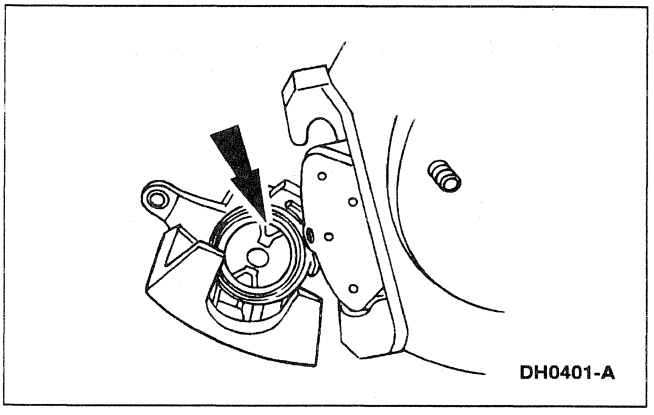

2. **NOTE:** Make sure one of the two slots in the rear brake piston and adjuster face is positioned so it will engage the nib on the pad.

   Install the rear disc brake caliper.

REMOVAL AND INSTALLATION (Continued)

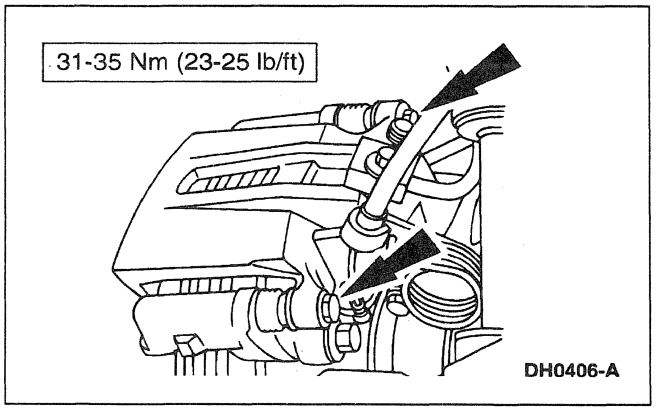

3. Tighten the rear brake pin retainers.

4. Install the rear wheel and tire assemblies; refer to Section 204-04.

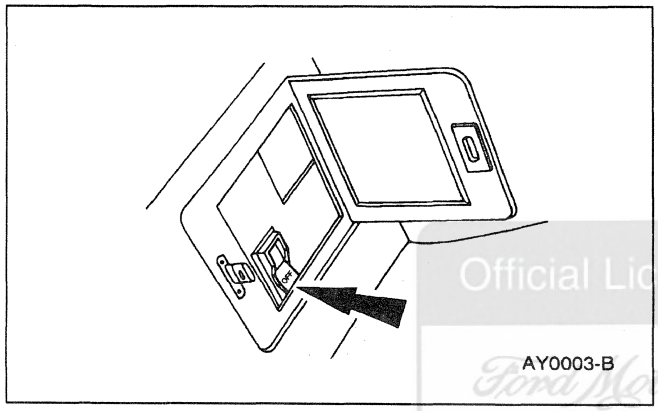

5. Turn the air suspension service switch on.

Official Licensed Product
Ford Motor Company

Rotor

Removal

1. Remove the rear disc support bracket (2B511); refer to Support Bracket in this section.

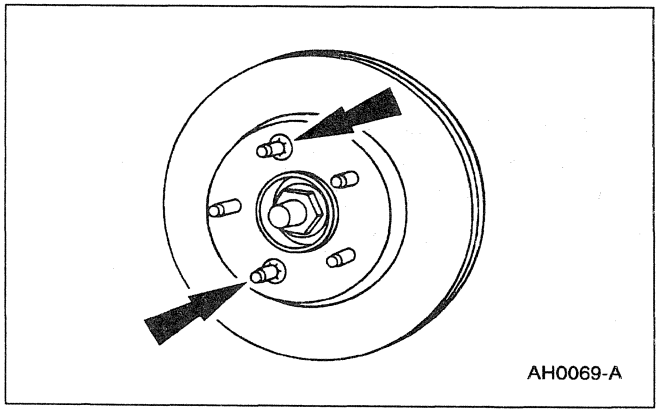

2. **NOTE:** Remove and discard the push nuts, if so equipped.

   Remove the rear disc brake rotor (2C026).

REMOVAL AND INSTALLATION (Continued)

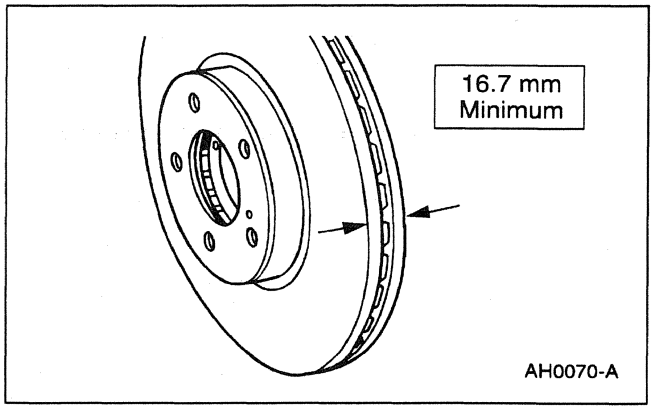

3. ⚠ **CAUTION: Use a hub-mount brake lathe if necessary to machine the rear disc brake rotor.**

   Measure the rear disc brake rotor, and resurface as necessary. Replace the rear disc brake rotor if beyond specification.

Installation

1. Follow the removal procedure in reverse order.

Support Bracket

Removal

Official Licensed Product
Ford Motor Company

1. Remove the brake pads; refer to Pads in this section.

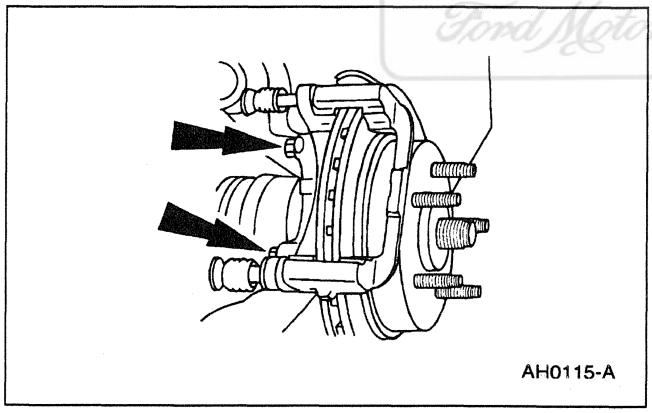

2. Remove the rear disc support bracket bolts.

REMOVAL AND INSTALLATION (Continued)

Installation

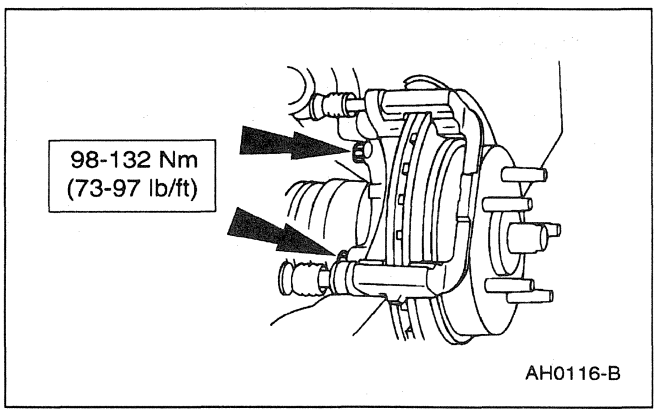

1. Follow the removal procedure in reverse order.

Shield

Removal

1. Remove the rear disc brake rotor (2C026); refer to Rotor in this section.

Official Licensed Product
Ford Motor Company

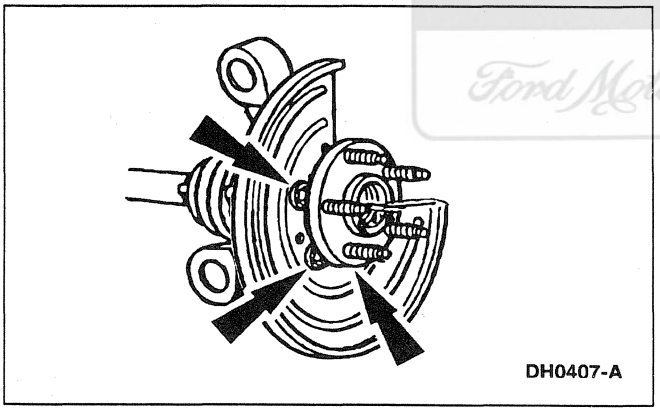

2. Remove the rear wheel disc brake shield bolts.

Installation

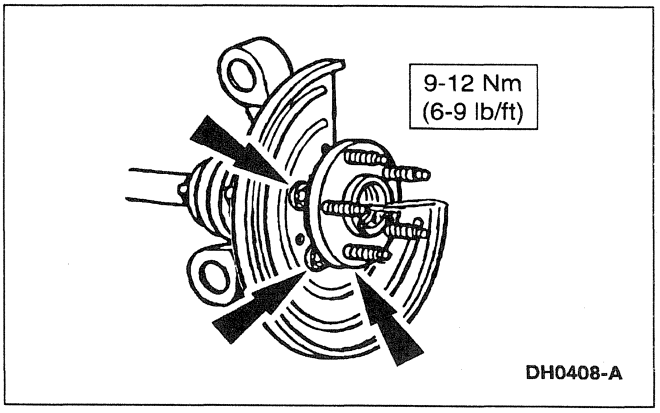

1. Follow the removal procedure in reverse order.

DISASSEMBLY AND ASSEMBLY

Caliper

Special Tool(s)

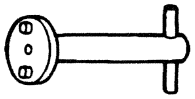 ST1112-A	Rear Caliper Piston Adjuster 206-026 (T87P-2588-A)
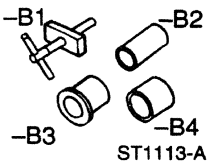 ST1113-A	Rear Caliper Spring Compressor Set 206-S027 (T87P-2588-B)

Disassembly

1. Remove the rear disc brake caliper (2552); refer to Caliper in the Removal and Installation portion of this section.
2. Drain the brake fluid from the rear disc brake caliper.
3. Secure the rear disc brake caliper in a vise.

Official Licensed Product
Ford Motor Company

DISASSEMBLY AND ASSEMBLY (Continued)

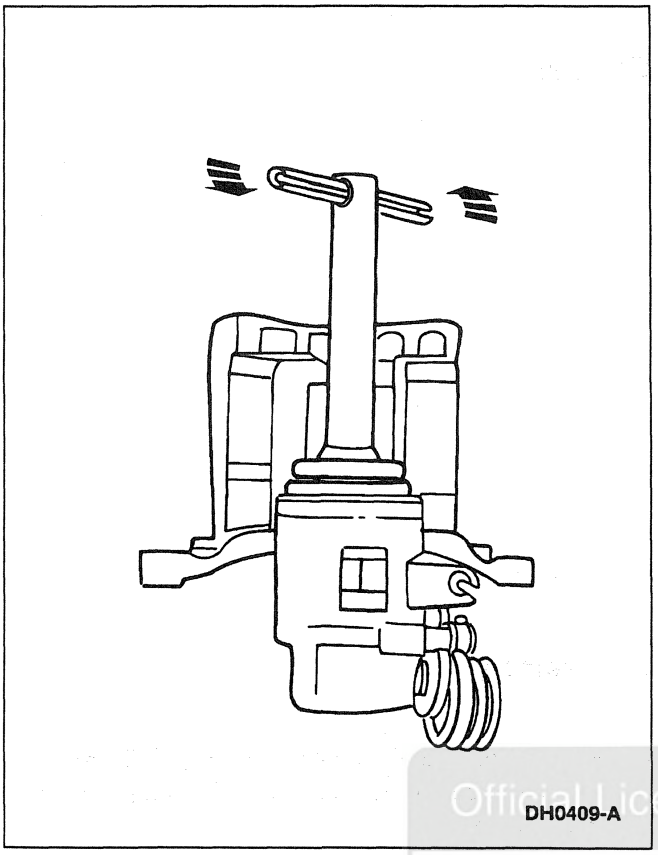
DH0409-A

4. Turn the rear disc brake piston and adjuster (2B588) counterclockwise with Rear Caliper Piston Adjuster.

Official Licensed Product
Ford Motor Company

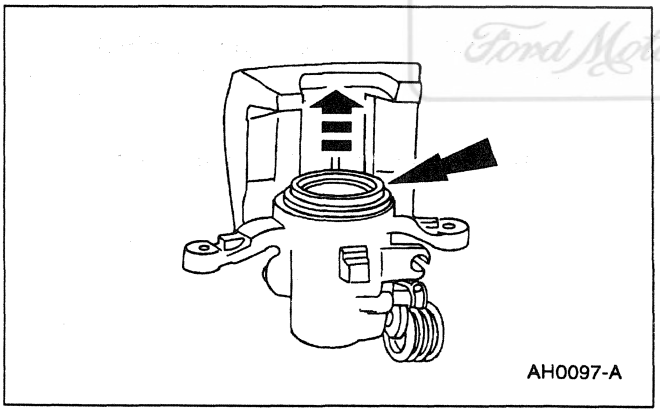
AH0097-A

5. Remove the rear disc brake piston and adjuster from the caliper bore.

6. Remove and discard the piston dust boot seal and piston seal from the caliper bore.

DISASSEMBLY AND ASSEMBLY (Continued)

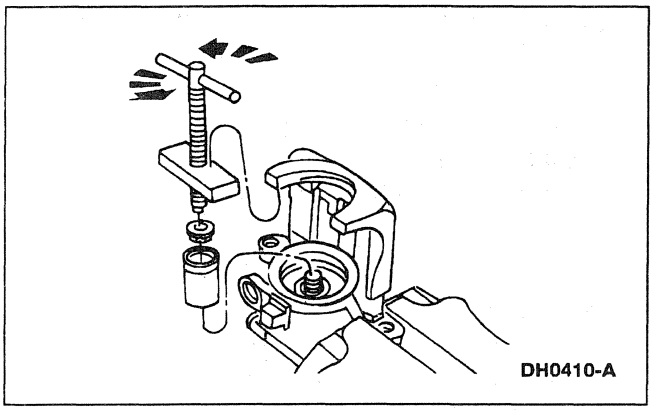

7. ⚠ **CAUTION: The parking brake lever pin retainer clip (2A746) and spring cover are spring-loaded. Use care when removing the parking brake lever pin retainer clip.**

   Remove the parking brake lever pin retainer clip.

   - Unload the spring tension from the parking brake lever pin retainer clip and spring cover using Screw and Cross Block, a 6-mm washer head nut and a 1/2-inch drive 14-mm socket.
   - Remove the parking brake lever pin retainer clip with suitable snap-ring pliers.
   - Remove Screw and Cross Block.

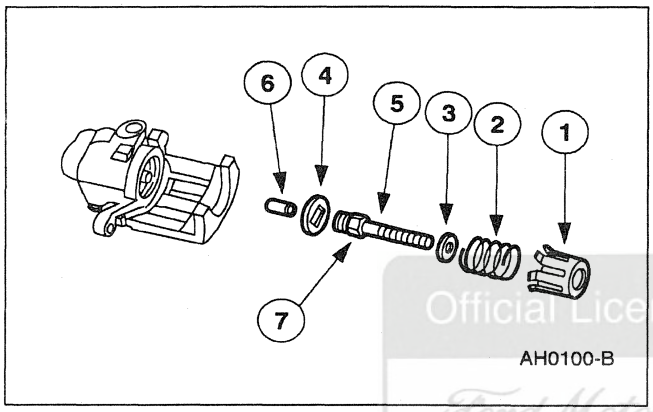

8. Remove the following components:
   1 spring cover
   2 spring
   3 washer
   4 key plate
   5 push rod
   6 strut pin
   7 push rod O-ring

Official Licensed Product
Ford Motor Company

9. Remove and discard the O-ring seal from the push rod.

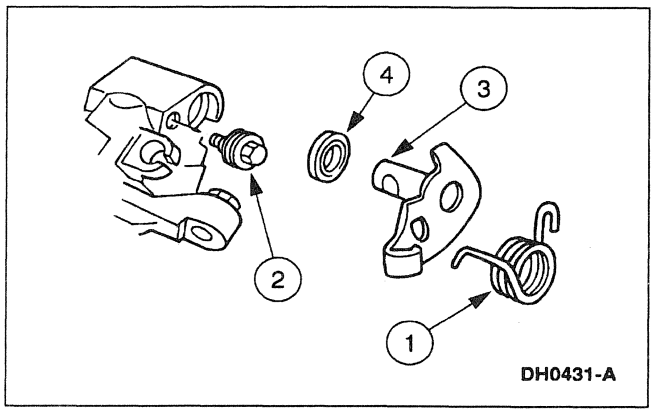

10. Remove the parking brake lever (2A637).
    1 Remove the parking brake return spring (2456).
    2 Remove the limiting bolt (2A795).
    3 Remove the parking brake lever.
    4 Remove the parking brake lever shaft seal from the caliper bore.

DISASSEMBLY AND ASSEMBLY (Continued)

Assembly

1. ⚠ **CAUTION: Do not reuse piston seals or dust boots. Install new seals or dust boots or damage to the vehicle can occur.**

   NOTE: Use new brake fluid when assembling and bleeding the brake system.

   NOTE: Lightly lubricate the parking brake lever bore, limiting bolt , parking brake lever shaft and parking brake shaft recess with Silicone Dielectric Compound D7AZ-19A331-A or equivalent meeting Ford specification ESE-M1C171-A.

   Follow the disassembly procedure in reverse order.

SPECIFICATIONS

General Specifications

Item	Specification
Brake Linings/Rotors	
Lining Wear Limit (from Shoe Surface)	1.0 mm (0.039 Inch)
Rear Disc Brake Rotor Minimum Thickness[a]	16.7 mm (0.657 Inch)
Rear Disc Brake Rotor Maximum Allowable Runout	0.076 mm (0.003 Inch)
Rear Rotor Maximum Thickness Variation	0.009 mm (0.00035 Inch)
Fluids/Lubricants	
High Performance DOT 3 Brake Fluid C6AZ-19542-AB	ESA-M6C25-A
Silicone Brake Caliper Grease and Dielectric Compound D7AZ-19A331-A (WA-10)	ESE-M1C171-A
Anti-Seize Compound F6AZ-9L494-AA	ESE-M12A4-A

a Minimum safe thickness is shown on each rear disc brake rotor.

Torque Specifications

Description	Nm	Lb/Ft
Caliper Flow Bolt	40-55	30-40
Rear Disc Support Bracket Retaining Bolts	98-132	73-97
Rear Wheel Disc Brake Shield Retaining Bolts	9-12	6-9
Rear Brake Pin Retainer	31-35	23-25

Official Licensed Product

SECTION 206-05 Parking Brake and Actuation

VEHICLE APPLICATION: Mark VIII

SUBJECT	PAGE
DESCRIPTION AND OPERATION	
Parking Brake	206-05-2
DIAGNOSIS AND TESTING	
Parking Brake	206-05-3
Inspection and Verification	206-05-3
Pinpoint Tests	206-05-4
Symptom Chart	206-05-4
REMOVAL AND INSTALLATION	
Bulb — Brake System Warning Indicator	206-05-19
Control	206-05-12
Release Actuator	206-05-18
GENERAL PROCEDURES	
Cable Adjustment	206-05-19
SPECIFICATIONS	206-05-20

Official Licensed Product
Ford Motor Company

DESCRIPTION AND OPERATION

Parking Brake

Component Location

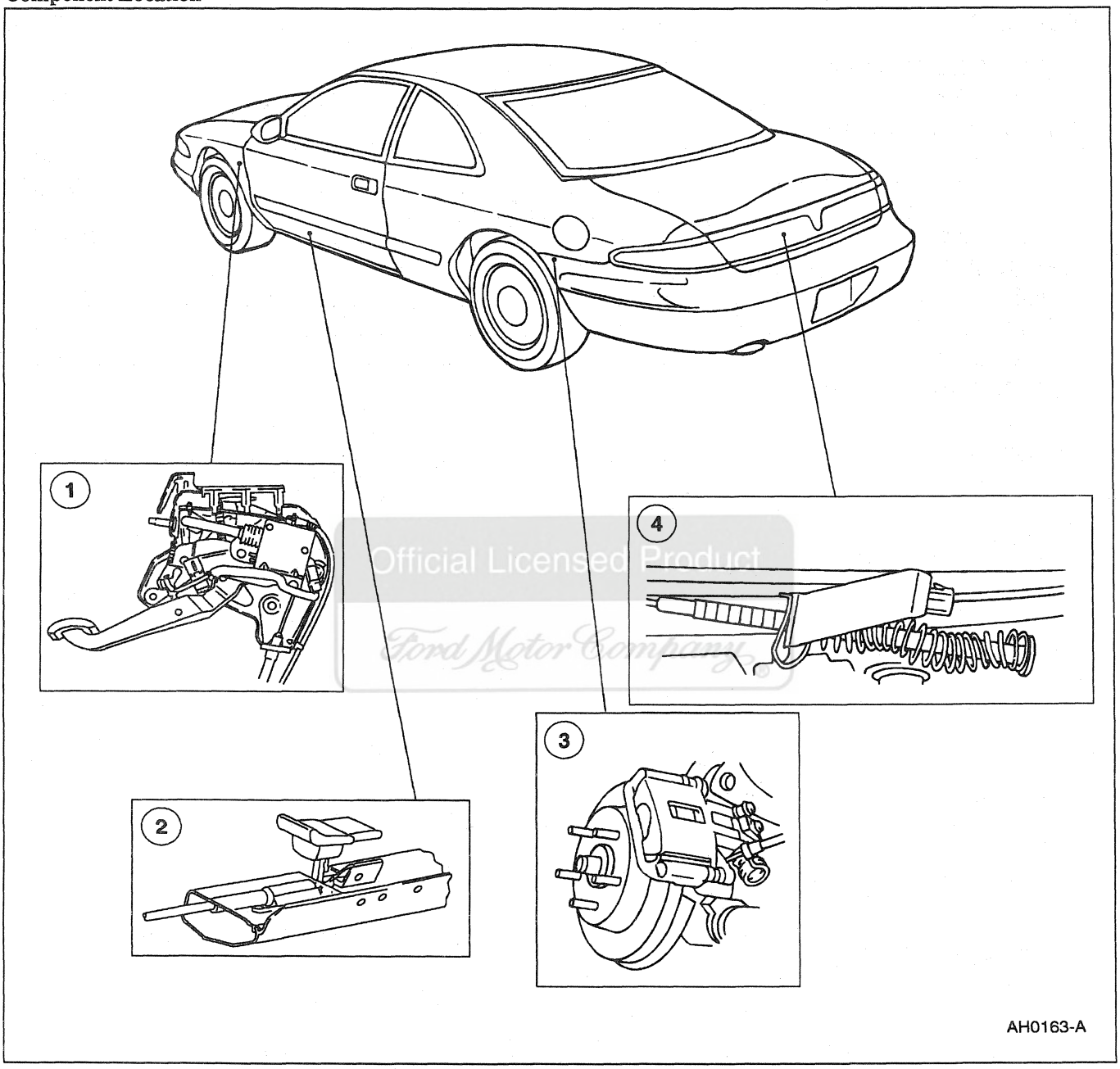

Official Licensed Product
Ford Motor Company

Item	Part Number	Description
1	2780	Parking Brake Control
2	2B657	Parking Brake Release Cable
2	2783	Manual Parking Brake Release Handle

Item	Part Number	Description
3	2552	Rear Disc Brake Caliper
4	2B599	Parking Brake Cable Adjuster

(Continued)

DESCRIPTION AND OPERATION (Continued)

The parking brake system is cable-actuated and controlled by an independent foot-operated parking brake control (2780).

The cable-actuated rear wheel parking brake operates in the following manner:

- To apply the parking brake, press the parking brake control pedal downward.
- The steering column/ignition/lighting control module controls the electrical release of the parking brake. The parking brake can be released electrically or manually.
- To release the parking brake electrically:
  - — start the engine.
  - — press the brake pedal.
  - — shift the transmission selector lever to Reverse or a forward gear.
- To release the parking brake manually:
  - — pull up on the manual parking brake release handle on the floor next to the driver seat.
- The parking brake control will release with a click, signaling that the parking brake has disengaged.
- After returning to the full OFF position, the parking brake control will reset itself to lock upon the next parking brake control pedal application.

If the parking brake control is not fully released, the parking brake signal switch will illuminate the brake warning light.

DIAGNOSIS AND TESTING

Parking Brake

Refer to Electrical and Vacuum Troubleshooting Manual, Cell 58, Lighting Control Module for schematic and connector information.

Special Tool(s)

ST1137-A	73 Digital Multimeter 105-R0051 or Equivalent
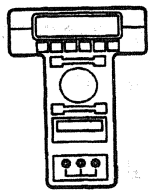 ST1217-A	New Generation Star (NGS) Tester 418-F048 (007-00500) or Equivalent

Inspection and Verification

1. Verify the customer's concern by operating the parking brake to duplicate the condition.
2. Inspect to determine if one of the following apply:

Visual Inspection Chart

Mechanical	Electrical
• Damaged parking brake control • Binding/damaged parking brake cables • Improperly adjusted parking brake cables	• Damaged Power Distribution Box Fuse 12 (15A) • Damaged Steering Column/Ignition Lighting Control Module • Damaged Parking Brake Switch • Damaged Parking Brake Release Actuator • Circuitry open/shorted

3. If inspection reveals obvious concern(s) that can be readily identified, service as required.

Official Licensed Reproduction Ford Motor Company

DIAGNOSIS AND TESTING (Continued)

4. If the concerns remain after the inspection, connect the New Generation Star (NGS) Tester to the data link connector (DLC) located beneath the instrument panel to perform DATA LINK DIAGNOSTIC TEST; refer to Section 418-00. If the New Generation Star (NGS) Tester responds with NO RESPONSE/NOT EQUIPPED for steering column/ignition lighting control module, refer to Section 417-01. If the DATA LINK DIAGNOSTIC TEST is passed for the steering column/ignition lighting control module, retrieve continuous diagnostic trouble codes (DTCs) and execute Self Test Diagnostics for steering column/ignition lighting control module; refer to Section 418-00.
5. If the self test is passed and no diagnostic trouble codes (DTCs) are retrieved, go to the Symptom Chart to continue diagnostics.

Symptom Chart

Symptom Chart

Condition	Possible Source	Action
• Parking Brake Will Not Apply	• Parking brake control . • Parking brake cable.	• GO to Pinpoint Test A.
• Parking Brake Will Not Release	• Parking brake cable. • Parking brake control . • Parking brake release control motor .	• GO to Pinpoint Test B.

Ford Motor Company

Pinpoint Tests

PINPOINT TEST A: PARKING BRAKE WILL NOT APPLY

TEST CONDITIONS	TEST DETAILS/RESULTS/ACTIONS
A1 CHECK THE PARKING BRAKE CABLE	
	1 Raise and support the vehicle. 2 Inspect for broken or binding parking brake cables. • Is there a parking brake cable concern? → **Yes** REPLACE the parking brake cable as necessary. → **No** GO to **A2**.

(Continued)

DIAGNOSIS AND TESTING (Continued)

PINPOINT TEST A: PARKING BRAKE WILL NOT APPLY (Continued)

TEST CONDITIONS	TEST DETAILS/RESULTS/ACTIONS
A2 CHECK THE PARKING BRAKE CONTROL	
	1 Operate the parking brake control. • Does the parking brake control operate smoothly? → **Yes** REFER to Cable Adjustment in this section. → **No** REPAIR the binding condition in the parking brake control. TEST the system for normal operation.

PINPOINT TEST B: PARKING BRAKE WILL NOT RELEASE

TEST CONDITIONS	TEST DETAILS/RESULTS/ACTIONS
B1 CHECK THE PARKING BRAKE CONTROL	
	1 Raise and support the vehicle. 2 Release the parking brake control using the manual parking brake release handle. • Does the parking brake release? → **Yes** GO to **B2**. → **No** GO to **B11**.
B2 CHECK THE STEERING COLUMN OPERATION	
	1 Operate the tilt and telescope functions on the steering column. • Does the steering column tilt and telescope properly? → **Yes** GO to **B3**. → **No** GO to Section 211-05, Inspection and Verification to continue diagnosis.

(Continued)

Official Licensed Product
Ford Motor Company

DIAGNOSIS AND TESTING (Continued)

PINPOINT TEST B: PARKING BRAKE WILL NOT RELEASE (Continued)

TEST CONDITIONS	TEST DETAILS/RESULTS/ACTIONS
B3 CHECK THE DTCs	
1 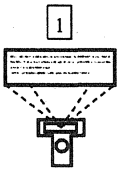 Steering Column/Ignition Lighting Control Module Self-Test	• Is DTC U1027, U1059 or B1360 retrieved? → **Yes** GO to Section 418-00 to service the DTC. → **No** GO to **B4**.
B4 CHECK THE PID PRK__BRK	
1 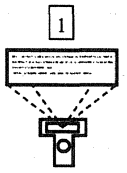 Steering Column/Ignition Lighting Control Module PID PRK__BRK	2 Actuate the parking brake. • Does the PID PRK__BRK change from OFF to ON as the parking brake is applied? → **Yes** GO to **B7**. → **No** GO to **B5**.

Official Licensed Product
Ford Motor Company®

(Continued)

DIAGNOSIS AND TESTING (Continued)

PINPOINT TEST B: PARKING BRAKE WILL NOT RELEASE (Continued)

TEST CONDITIONS	TEST DETAILS/RESULTS/ACTIONS
B5 CHECK THE PARKING BRAKE SWITCH	
1 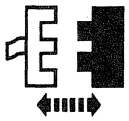 Parking Brake Switch Connector C2004 2 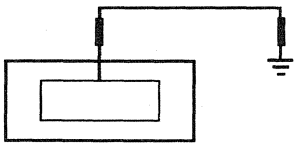 AH0176-A 3 Steering Column/Ignition Lighting Control Module PID PRK__BRK	2 Connect a jumper wire between the parking brake switch Connector C2004, Circuit 162 (LG/R) and ground. • Does the PID PRK__BRK read ON? → **Yes** REPLACE the parking brake switch. TEST the system for normal operation. → **No** GO to **B6**.

Official Licensed Product
Ford Motor Company

(Continued)

DIAGNOSIS AND TESTING (Continued)

PINPOINT TEST B: PARKING BRAKE WILL NOT RELEASE (Continued)

TEST CONDITIONS	TEST DETAILS/RESULTS/ACTIONS
B6 CHECK CIRCUIT 162 (LG/R) FOR AN OPEN	
1 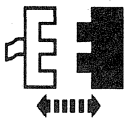 Steering Column/Ignition Lighting Control Module Connector C288 2 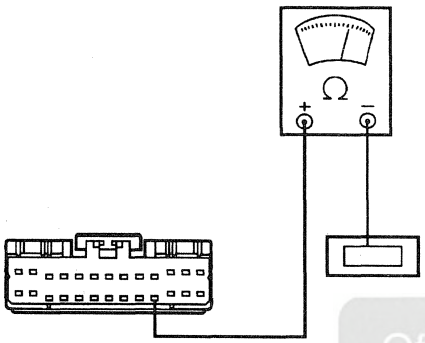 AH0177-B	2 Connect an ohmmeter between the steering column/ignition lighting control module connector Pin C288-23 and the parking brake switch Connector C2004, Circuit 162 (LG/R). • Is the resistance 5 ohms or less? → **Yes** REPLACE the steering column/ignition lighting control module. TEST the system for normal operation. → **No** REPAIR Circuit 162 (LG/R) for an open. TEST the system for normal operation.
B7 CHECK THE PARKING BRAKE RELEASE SOLENOID GROUND	
1 Parking Brake Switch Connector C2004 2 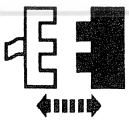 Parking Brake Release Solenoid Connector C2003 4 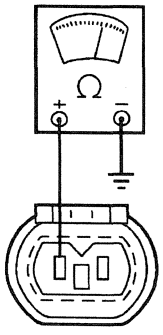 AH0178-A	3 Actuate the parking brake. 4 Connect an ohmmeter between the parking brake release actuator Connector C2003, Circuit 162 (LG/R) and ground. • Is the resistance 5 ohms or less? → **Yes** GO to **B8**. → **No** REPAIR Circuit 162 (LG/R) for an open between the parking brake release actuator and the parking brake switch. TEST the system for normal operation.

Official Licensed Publication
Ford Motor Company

(Continued)

DIAGNOSIS AND TESTING (Continued)

PINPOINT TEST B: PARKING BRAKE WILL NOT RELEASE (Continued)

TEST CONDITIONS	TEST DETAILS/RESULTS/ACTIONS
B8 CHECK THE PARKING BRAKE RELEASE SOLENOID SUPPLY	
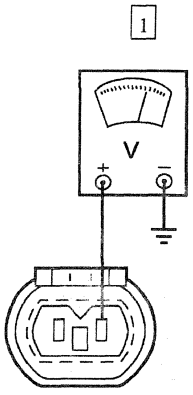 AH0181-A 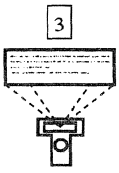 Steering Column/Ignition Lighting Control Module ACTIVE COMMAND - BRAKE SYSTEM 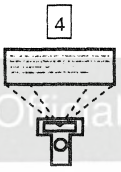 Trigger PARK__BRK ON	1 Connect a voltmeter to the parking brake release actuator Connector C2003, Circuit 750 (Y/LG). 2 Actuate the parking brake. • Is the voltage reading B+? → **Yes** REPLACE the parking brake release actuator. TEST the system for normal operation. → **No** GO to **B9**.

Official Licensed Product Ford Motor Company

(Continued)

DIAGNOSIS AND TESTING (Continued)

PINPOINT TEST B: PARKING BRAKE WILL NOT RELEASE (Continued)

TEST CONDITIONS	TEST DETAILS/RESULTS/ACTIONS
B9 CHECK CIRCUIT 750 (Y/LG) FOR A SHORT TO GROUND	
1 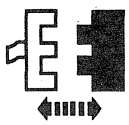 Steering Column/Ignition Lighting Control Module Connector C289 2 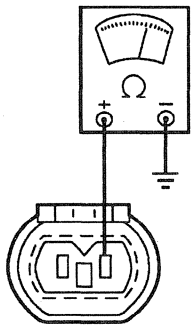 AH0179-A	2 Connect an ohmmeter between the parking brake release actuator connector C2003, Circuit 750 (Y/LG) and ground. • Is the resistance 10 kohms or less? → **Yes** REPAIR Circuit 750 (Y/LG) for a short to ground. TEST the system for normal operation. → **No** GO to **B10**.
B10 CHECK CIRCUIT 750 (Y/LG) FOR AN OPEN	
1 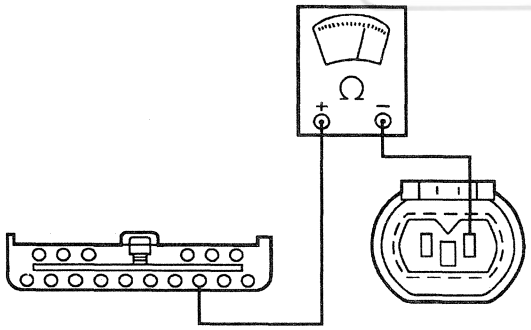 AH0180-B	1 Connect an ohmmeter between the steering column/ignition lighting control module connector Pin C289-3 and the parking brake release actuator Connector C2003, Circuit 750 (Y/LG). • Is the resistance 5 ohms or less? → **Yes** REPLACE the steering column/ignition lighting control module. TEST the system for normal operation. → **No** REPAIR Circuit 750 (Y/LG) for an open. TEST the system for normal operation.
B11 CHECK THE PARKING BRAKE CABLE	
	1 Release the parking brake cable tension.

Official Licensed Product
Ford Motor Company

(Continued)

DIAGNOSIS AND TESTING (Continued)

PINPOINT TEST B: PARKING BRAKE WILL NOT RELEASE (Continued)

TEST CONDITIONS	TEST DETAILS/RESULTS/ACTIONS
B11 CHECK THE PARKING BRAKE CABLE (Continued)	
	2 Rotate rear wheels by hand. • Do rear wheels turn freely? → **Yes** REPLACE the parking brake control. RESTORE the vehicle. TEST the system for normal operation. → **No** GO to **B12**.
B12 CHECK THE FRONT PARKING BRAKE CABLES	
	1 Disconnect the parking brake front cable and conduit from the parking brake rear cable and conduit. 2 Rotate rear wheels by hand. • Do rear wheels turn freely? → **Yes** REPLACE the parking brake front cable and conduit. RESTORE the vehicle. TEST the system for normal operation. → **No** GO to **B13**.
B13 CHECK THE REAR PARKING BRAKE CABLES	
	1 Disconnect the parking brake rear cable and conduit, one at a time. 2 Rotate the rear wheel affected by disconnected parking brake rear cable and conduit. • Does the wheel turn freely? → **Yes** REPLACE the parking brake rear cable and conduit. RESTORE the vehicle. TEST the system for normal operation. → **No** REPAIR or REPLACE the worn or damaged rear brake component. TEST the system for normal operation.

Official Licensed Product
Ford Motor Company

REMOVAL AND INSTALLATION

Control

Removal

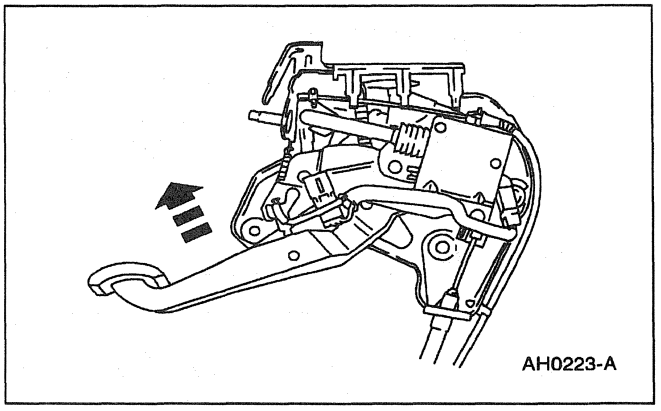

1. Fully release the parking brake control (2780).

2. Raise the vehicle on a hoist.

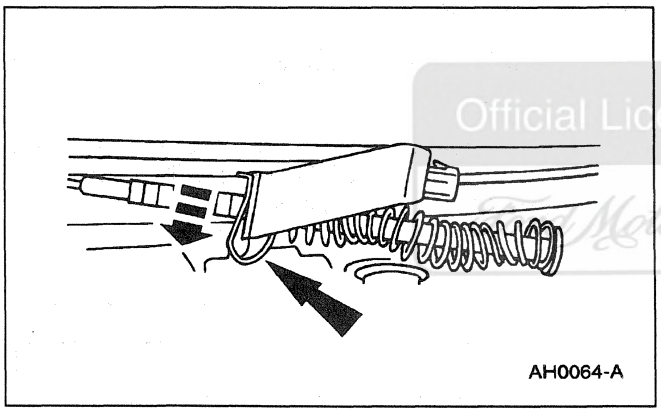

3. Pull the parking brake cable adjuster clip downward.

Official Licensed Product
Ford Motor Company

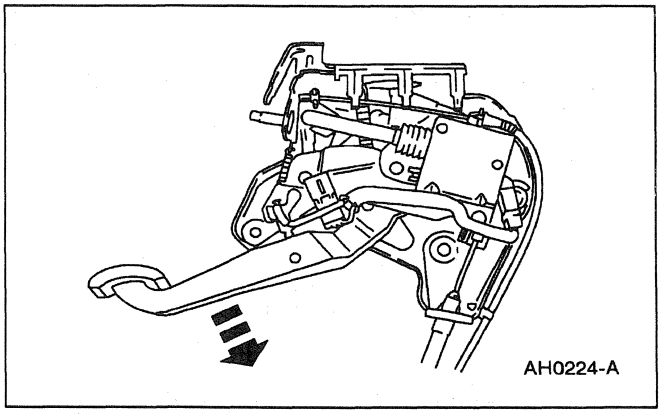

4. Fully apply the parking brake control .

REMOVAL AND INSTALLATION (Continued)

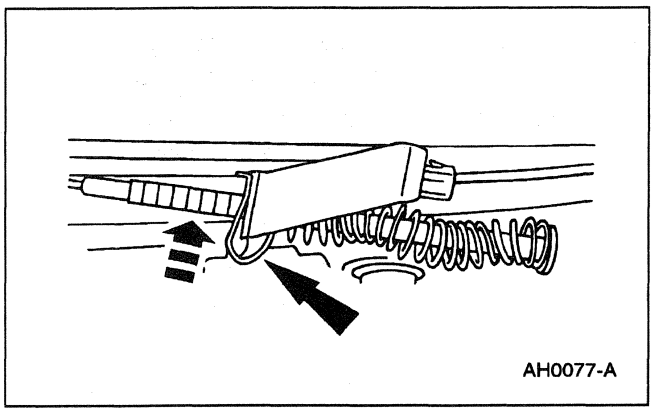

5. Push up on the bottom of the clip to lock the adjuster.

6. Release the parking brake control using the manual release.

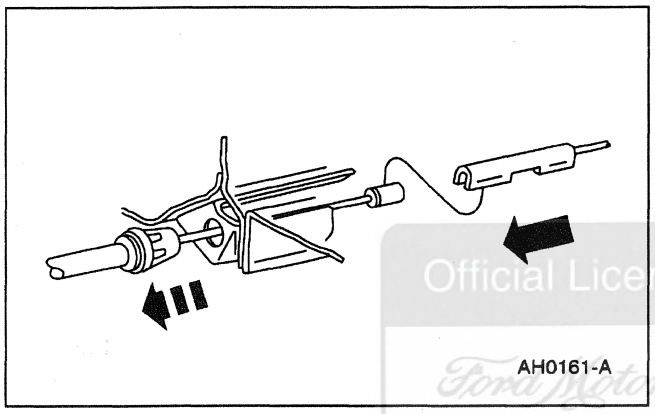

7. Disconnect the front parking brake cable and conduit (2853) from parking brake intermediate cable (2A620) .

Official Licensed Product
Ford Motor Company

8. Remove the drivers seat; refer to Section 501-10.

9. Disconnect the battery ground cable; refer to Section 414-01.

10. Remove the instrument panel steering column cover (04459) ; refer to Section 501-12.

11. Remove the cowl side trim panel (02344) ; refer to Console Panel procedure in Section 501-12.

12. Remove the powertrain control module (PCM)(12A650) ; refer to Section 303-14.

13. Remove windshield wiper control module; refer to Section 501-16.

REMOVAL AND INSTALLATION (Continued)

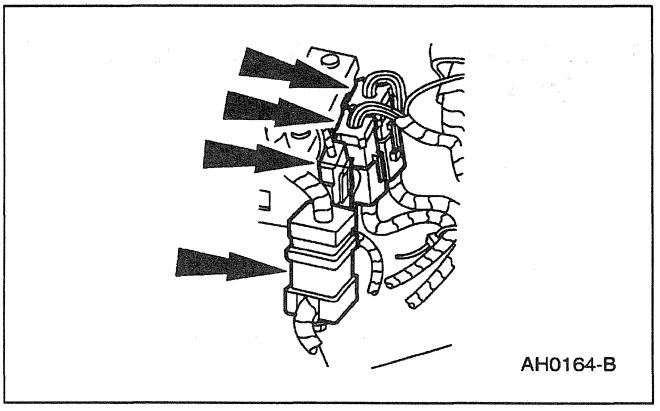

14. Disconnect the four male main wiring harness connectors from the female connections.

    Remove the four female wiring harness connectors from the parking brake bracket.

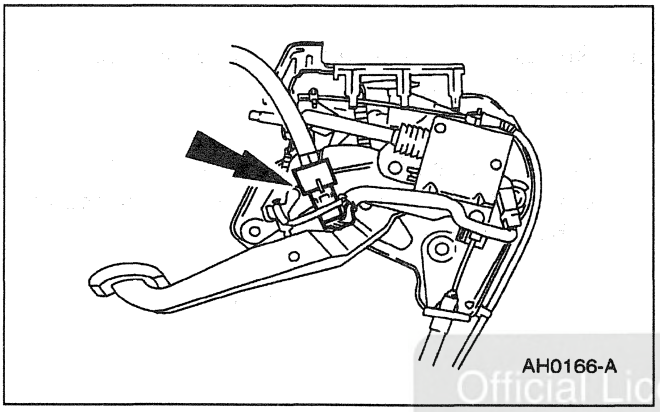

15. Disconnect the electrical connector to the parking brake signal switch and bracket (15A851) and the release actuator.

Official Licensed Product
Ford Motor Company

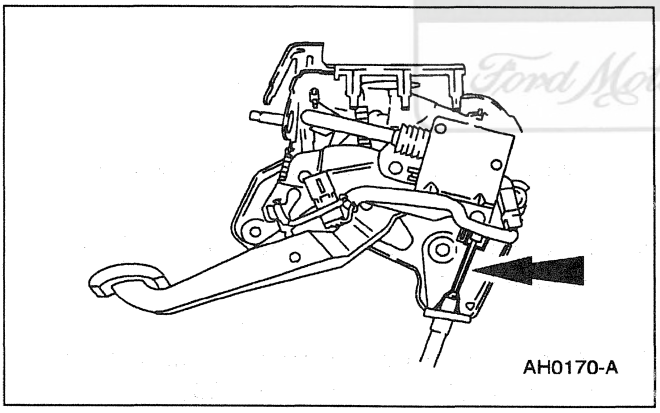

16. Disconnect the parking brake cable from the clevis.

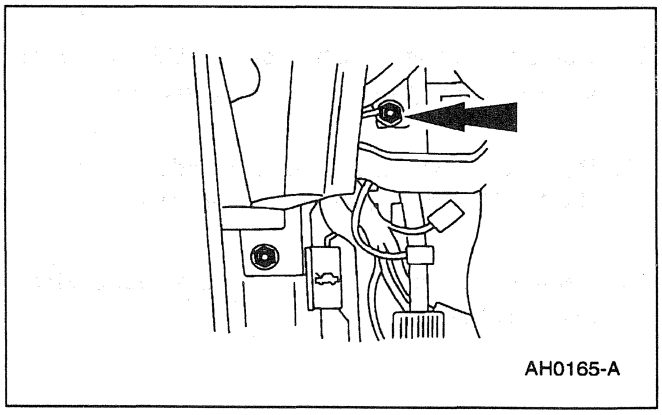

17. Remove the parking brake control-to-instrument panel retaining nut.

REMOVAL AND INSTALLATION (Continued)

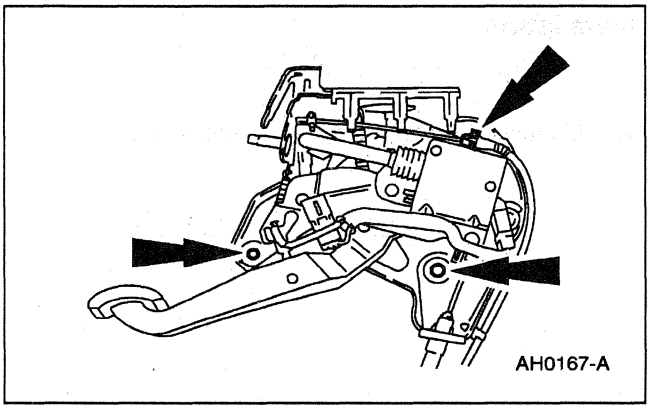

18. Remove the parking brake control to cowl retaining bolts.

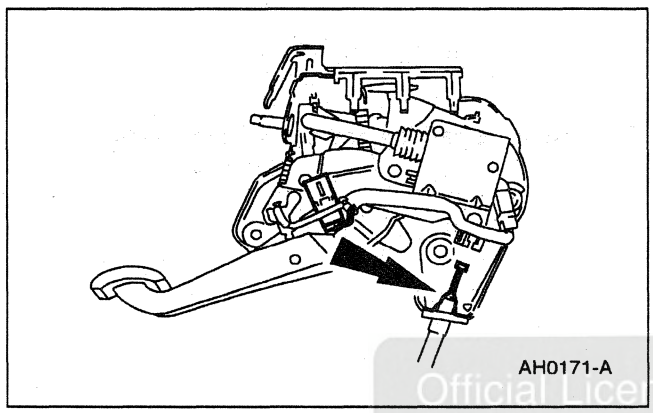

19. Using a 13 mm box-end wrench, depress the retaining prongs and remove the parking brake cable and conduit.

Official Licensed Product
Ford Motor Company

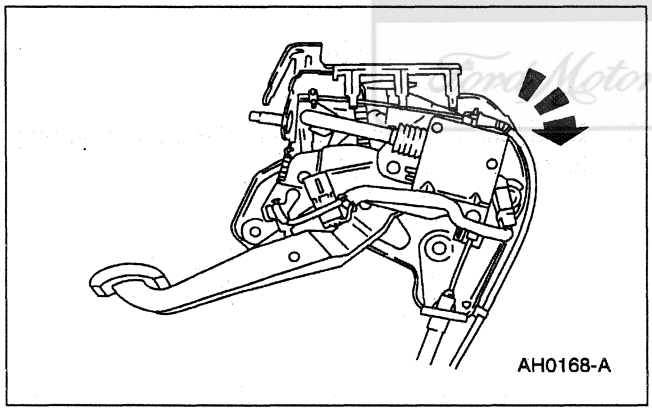

20. Rotate the parking brake control toward the front and inside of the vehicle.

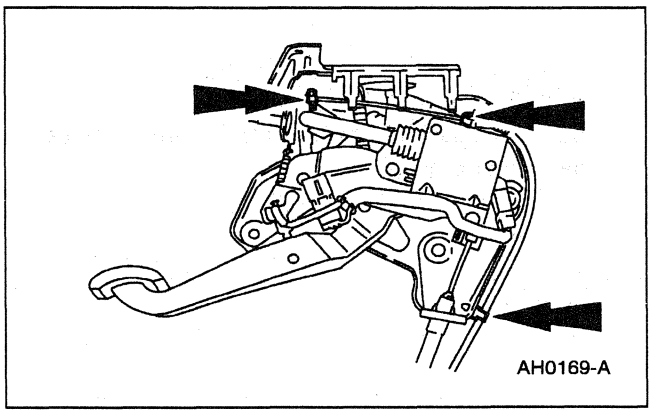

21. Disconnect the parking brake release cable (2B657) .

REMOVAL AND INSTALLATION (Continued)

Installation

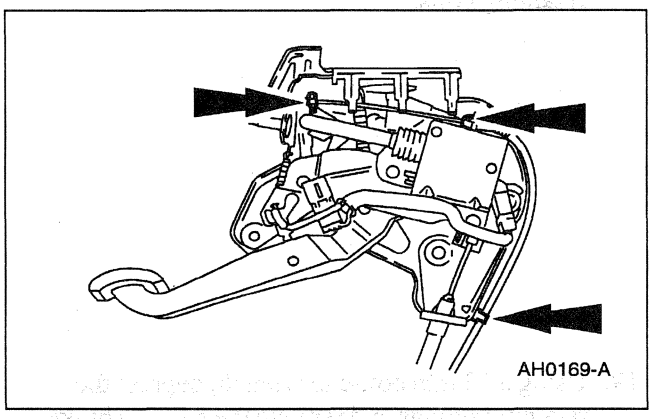

1. Connect the parking brake release cable .

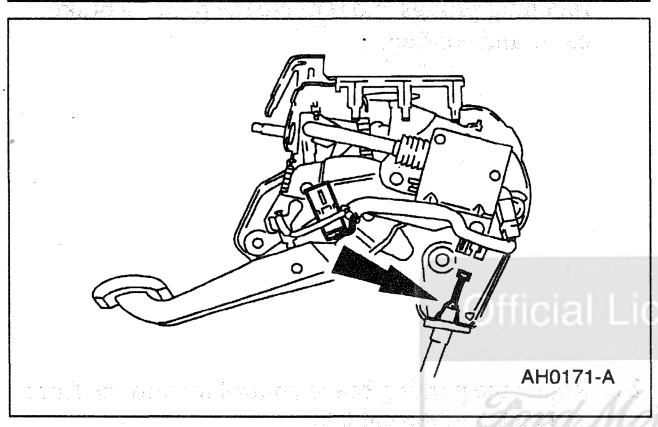

2. Install the parking brake cable and conduit.

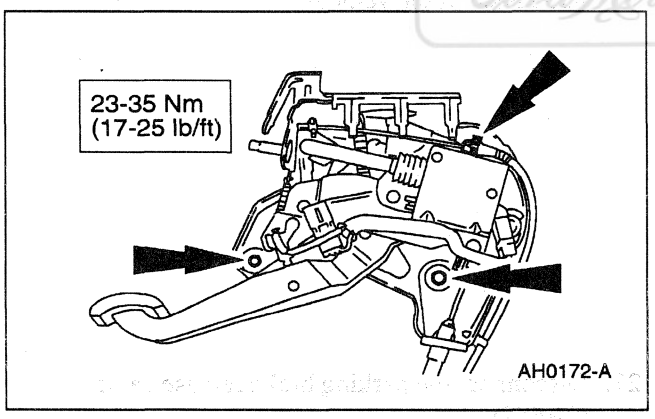

3. Install the parking brake control to cowl retaining bolts.

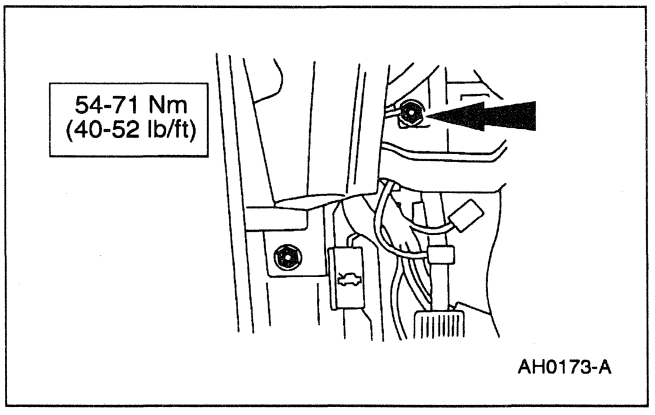

4. Install the parking brake control-to-instrument panel retaining nut.

Official Licensed Product
Ford Motor Company

REMOVAL AND INSTALLATION (Continued)

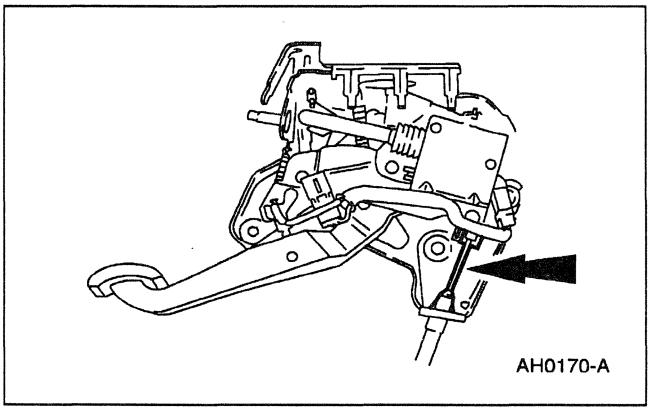

5. Connect the parking brake cable to the clevis.

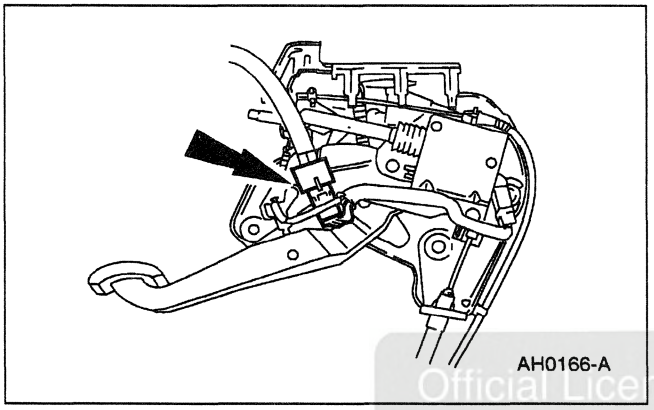

6. Connect the electrical connector to the parking brake signal switch and bracket and the release actuator.

Official Licensed Product
Ford Motor Company

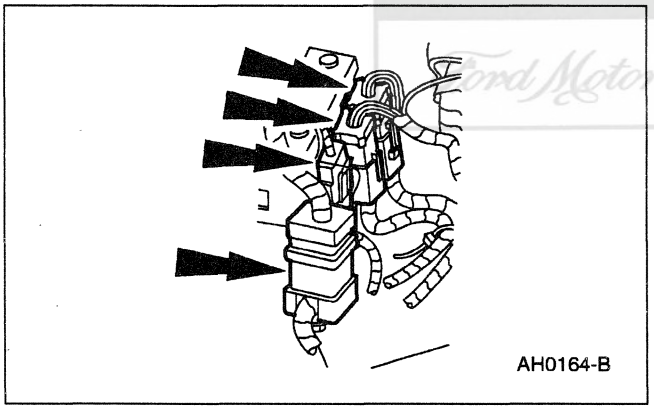

7. Connect the four male main wiring harness connectors to the female connections.

   Install the four female wiring harness connectors to the parking brake bracket.

8. Install the windshield wiper control module; refer to Section 501-16.

9. Install the powertrain control module ; refer to Section 303-14.

10. Install the cowl side trim panel ; refer to Console Panel procedure in Section 501-12.

11. Install the instrument panel steering column cover ; refer to Section 501-12.

REMOVAL AND INSTALLATION (Continued)

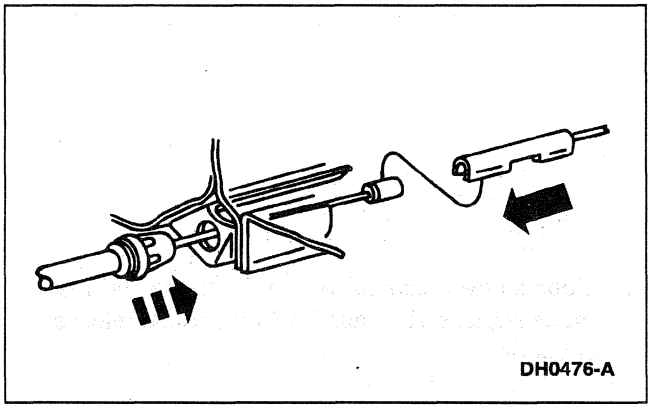
DH0476-A

12. Connect the battery ground cable; refer to Section 414-01.
13. Install the driver seat; refer to Section 501-10.
14. Connect the front parking brake cable and conduit to the parking brake intermediate cable .
15. Adjust cable tension; refer to Cable Adjustment in this section.

Official Licensed Parts
Ford Motor Company

Release Actuator

Removal

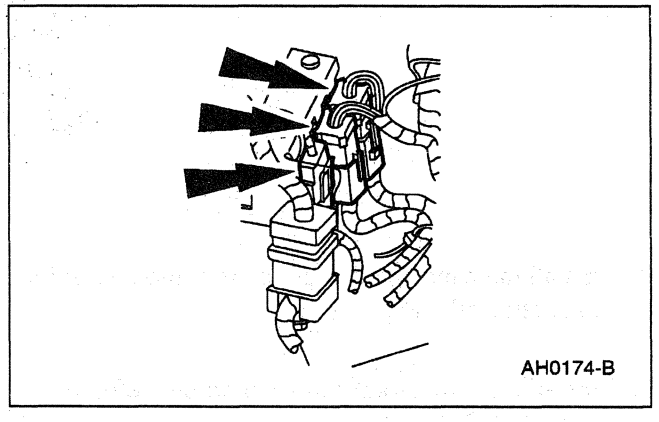
AH0174-B

1. Remove the instrument panel steering column cover (04459) ; refer to Section 501-12.
2. Disconnect the three main wiring harness connectors from the mounting brackets.

REMOVAL AND INSTALLATION (Continued)

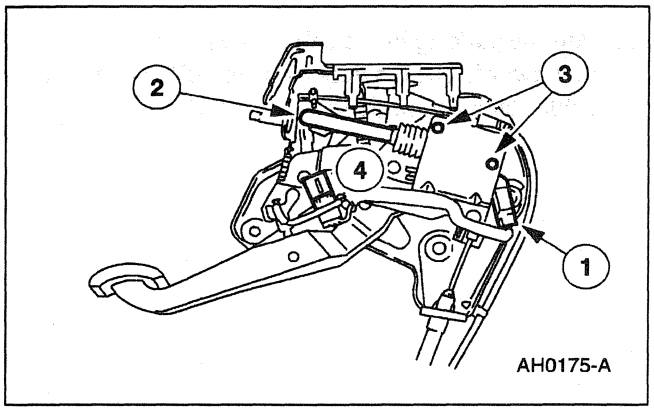

3. Remove the parking brake release actuator.
   1 Disconnect the electrical connector.
   2 Pop the plastic actuator rod from the release arm.
   3 Remove the actuator retaining screws.
   4 Slide the actuator out of the mounting bracket.

Installation

1. Follow the removal procedure in reverse order.

Bulb — Brake System Warning Indicator

Refer to Section 413-01.

Official Licensed Product
Ford Motor Company

GENERAL PROCEDURES

Cable Adjustment

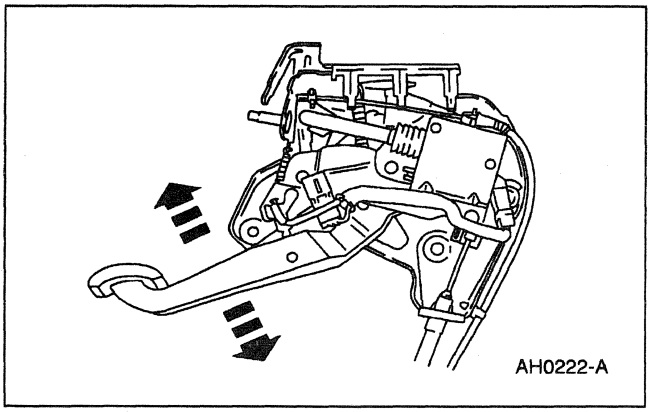

1. Apply the parking brake control (2780) with 445 N (100 lb) foot-pedal effort and release using the manual release located next to the driver's seat. Repeat application and release again.

2. Raise the vehicle on a hoist.

GENERAL PROCEDURES (Continued)

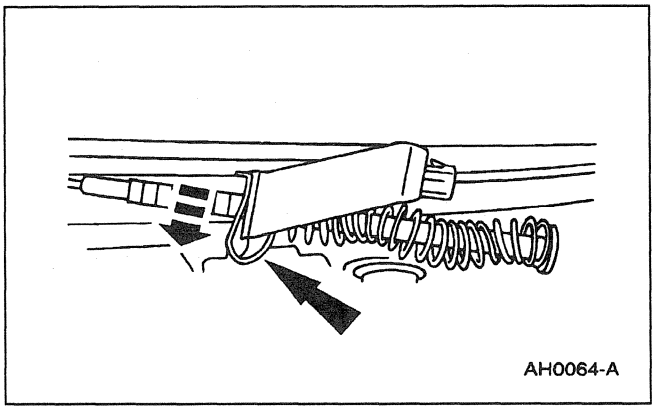

3. Pull the parking brake cable adjuster clip downward. The tensioner spring will take up the cable slack and preload the cables.

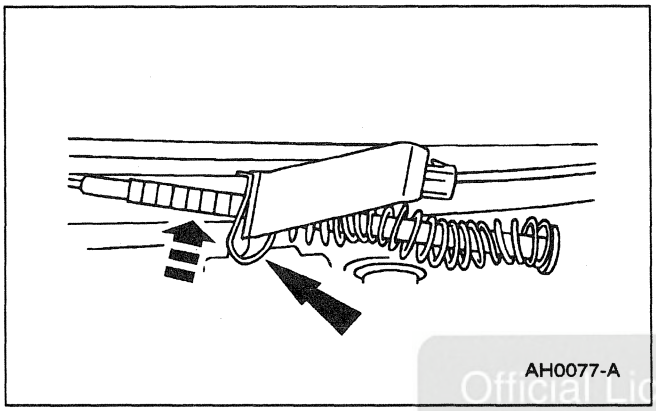

4. Push up on the bottom of the clip to lock adjustment. If the clip does not slide up, move the assembly slightly to align closest groove on the parking brake cable adjuster rod with the clip.

Official Licensed Product
Ford Motor Company

SPECIFICATIONS

Torque Specifications

Description	Nm	Lb/Ft
Parking Brake Control to Cowl Side Panel Retaining Bolts	23-35	17-25
Parking Brake Control to Instrument Panel Retaining Nut	54-71	40-52

SECTION 206-06 Hydraulic Brake Actuation

VEHICLE APPLICATION: Mark VIII

SUBJECT	PAGE
DESCRIPTION AND OPERATION	
Hydraulic Brake System	206-06-2
DIAGNOSIS AND TESTING	
Hydraulic Brake System	206-06-3
REMOVAL AND INSTALLATION	
Brake Master Cylinder	206-06-5
Pedal and Bracket	206-06-3
SPECIFICATIONS	206-06-7

Official Licensed Product
Ford Motor Company

DESCRIPTION AND OPERATION

Hydraulic Brake System

CAUTION: Blistering or swelling of rubber brake components may indicate contamination of the brake fluid by a petroleum based substance. Contaminated rubber components in the hydraulic brake system must be replaced, and the entire hydraulic brake system must be flushed with clean brake fluid to prevent recontamination.

This vehicle is equipped with a brake pedal actuated dual brake system. The system consists of the following:

- power brake booster (2005)
- brake master cylinder (2140)
- brake pressure control valve (2B091)
- disc brake calipers (2B120)
- rear disc brake calipers (2553)
- brake tubes and hoses
- anti-lock brake system (ABS) components

The dual ABS hydraulic system is diagonally split, with the LH front and RH rear making up one circuit and the RH front and LH rear making up the other circuit.

Brake Fluid

WARNING: BRAKE FLUID CONTAINS POLYGLYCOL ETHERS AND POLYGLYCOLS. AVOID CONTACT WITH EYES. WASH HANDS THOROUGHLY AFTER HANDLING. IF BRAKE FLUID CONTACTS EYES, FLUSH EYES WITH RUNNING WATER FOR 15 MINUTES. GET MEDICAL ATTENTION IF IRRITATION PERSISTS. IF TAKEN INTERNALLY, DRINK WATER AND INDUCE VOMITING. GET MEDICAL ATTENTION IMMEDIATELY.

Clean, fresh Ford High Performance DOT 3 Brake Fluid C6AZ-19542-AB or equivalent DOT 3 fluid meeting Ford specification ESA-M6C25-A is the only brake fluid that should be used in Ford vehicles.

- Do not reuse brake fluid drained or bled from the system.
- Do not use brake fluid that has been stored in an open container.
- Do not use contaminated brake fluid.
- Do not mix different types of brake fluid.

Brake Master Cylinder

The brake master cylinder is a dual piston type. The brake master cylinder operates as follows:

- When the brake pedal (2455) is depressed, pressure is applied by mechanical linkage to the primary and secondary piston.
- Brake master cylinder pistons apply hydraulic pressure to the two opposed hydraulic circuits.
- ABS brake master cylinder will not be overhauled, due to internal adjustments which require extensive special tools and fixtures. Service is made by replacement only.

The brake master cylinder consists of:

- brake master cylinder reservoir (2K478)
- brake master cylinder body

Brake Master Cylinder Reservoir

NOTE: Whenever the brake master cylinder reservoir is removed from the brake master cylinder , new grommets must be installed.

The brake master cylinder reservoir :

- is mounted to the brake master cylinder .
- holds fluid supply for each brake master cylinder hydraulic piston.
- provides visual fluid level markings.
- contains the brake master cylinder fluid level sensor.

Brake Pressure Control Valve

The brake pressure control valve consists of twin brake proportioning valves which proportion the pressure to the rear brakes individually.

- When the brake pedal is applied, brake fluid pressure passes through the proportioning valves to the rear brake system until the valve split point is reached.
- Above its split point, the proportioning valves begin to reduce the hydraulic pressure to the rear brakes, creating a balanced braking condition between the front and rear wheels.
- The brake pressure control valve is located behind the cowl side panel (02038) .

Unlicensed Product Ford Motor Company

DESCRIPTION AND OPERATION (Continued)

Brake Tubes and Hoses

⚠ **CAUTION: Never use copper tubing. It is subject to fatigue, cracking and corrosion, which could result in brake tube failure.**

Double wall steel tubing is used throughout the brake hydraulic system. All brake tube fittings must be properly double flared to provide strong leakproof connections. When bending tubing to fit the underbody or rear axle contours, be careful not to kink or crack the tube.

If a section of brake tube is damaged, the entire section must be replaced with a tube of the same type, size, shape and length.

When replacing hydraulic brake tubing, hoses, or connectors, tighten all connections securely. After replacement, bleed the brake system; refer to Section 206-00.

The wet appearance on the outer cover of rubber brake hoses is called ''sweating.'' This is a normal condition for neoprene rayon braid hose and is not a sign of leakage or cause for replacement of the hose.

DIAGNOSIS AND TESTING

Hydraulic Brake System

Refer to Section 206-00.

Official Licensed Product
Ford Motor Company

REMOVAL AND INSTALLATION

Pedal and Bracket

Removal

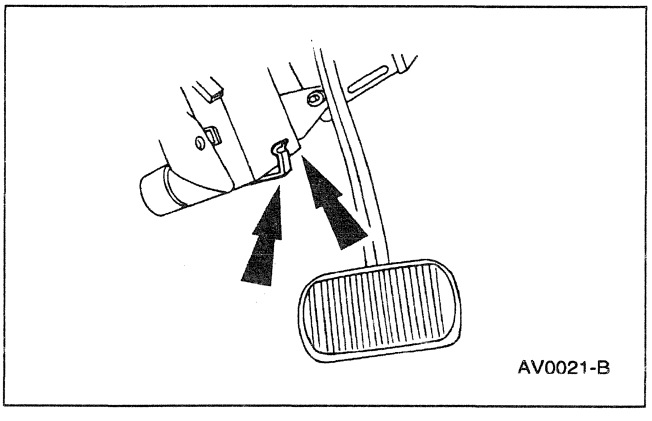

1. Disconnect the battery ground cable (14301); refer to Section 414-01.
2. Working inside the vehicle below the instrument panel (04320), remove the retaining clip from the powertrain control module (PCM)(12A650).

REMOVAL AND INSTALLATION (Continued)

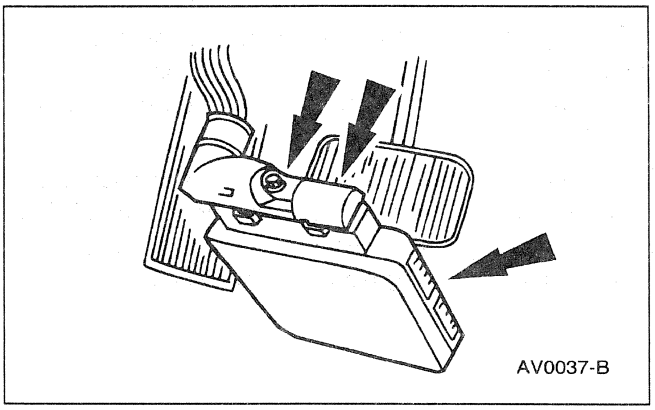

3. Position the powertrain control module out of the way.

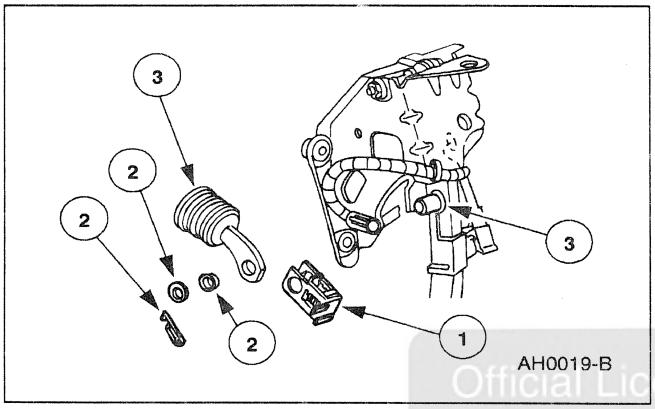

4. Remove the power brake booster push rod.
   1 Disconnect the electrical connector from the stoplight switch (13480) .
   2 Remove the hairpin retainer and the push rod spacer.
   3 Remove the push rod, stoplight switch and push rod bushing.

Official Licensed Product
Ford Motor Company

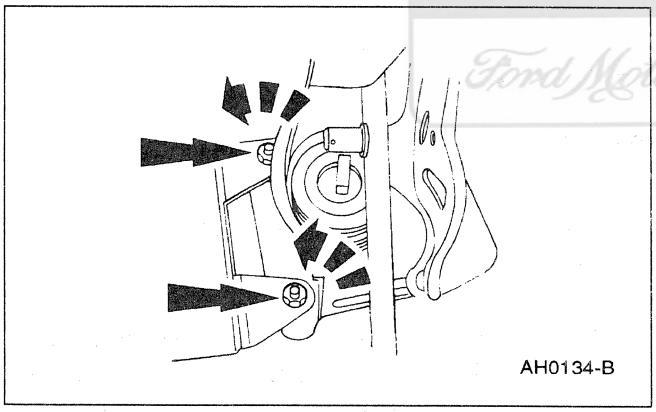

5. Remove the processor bracket to brake booster studs retaining nuts, and position the bracket out of the way.

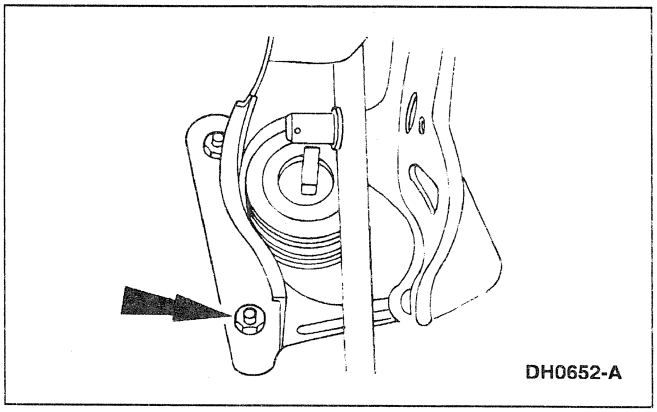

6. Remove the brake pedal support bracket-to-booster stud retaining nuts.

REMOVAL AND INSTALLATION (Continued)

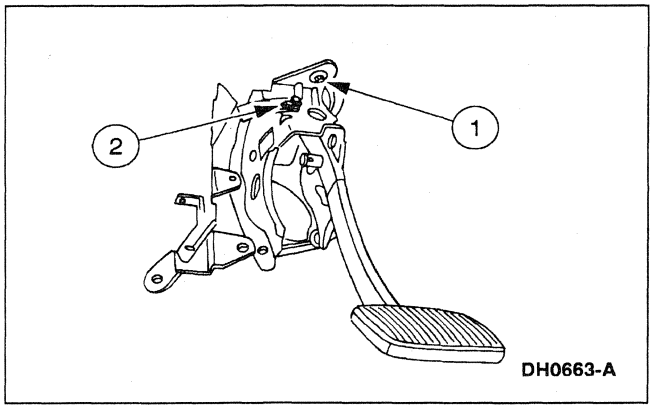

7. Remove the brake pedal support bracket.
   1 Remove the pedal support bracket-to-cowl bolt.
   2 Slide the brake pedal and bracket off the studs and remove two screws retaining the processor bracket-to-brake pedal support bracket.

Installation

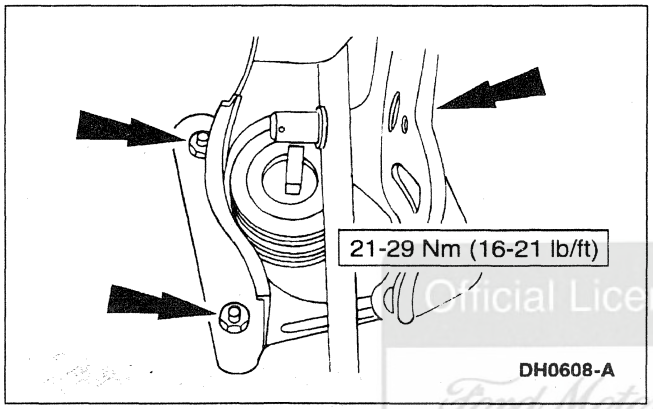

1. Follow the removal procedure in reverse order.

Official Licensed Product
Ford Motor Company

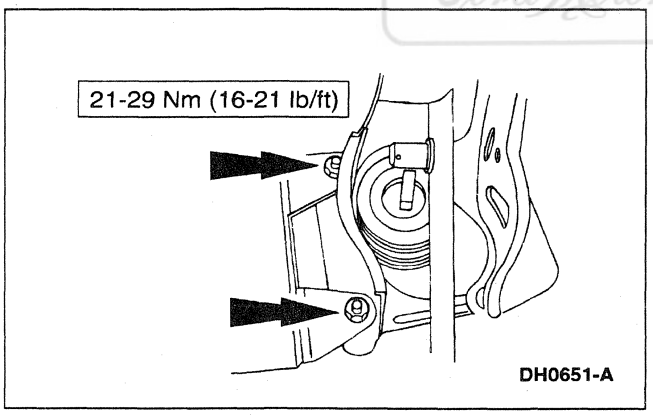

Brake Master Cylinder

Removal

1. Disconnect the battery ground cable (14301); refer to Section 414-01.

REMOVAL AND INSTALLATION (Continued)

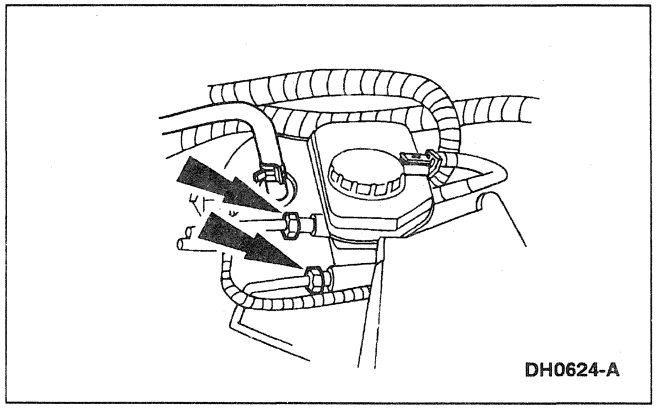
DH0624-A

2. Disconnect the two brake lines and plug the lines and the brake master cylinder parts.

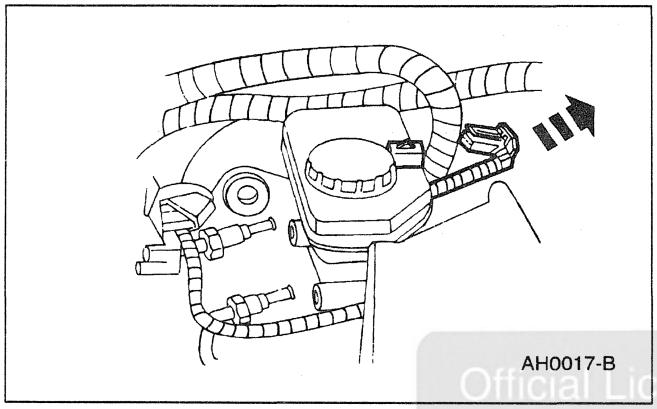
AH0017-B

3. Disconnect the fluid level sensor connector.

Official Licensed Product
Ford Motor Company

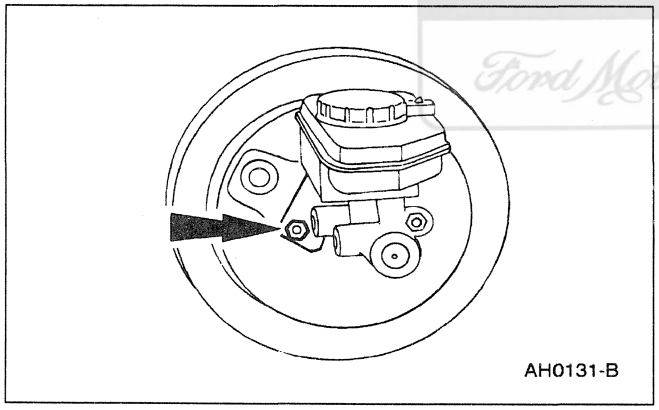
AH0131-B

4. Remove the nut retaining the wire harness support bracket. Remove the bracket.

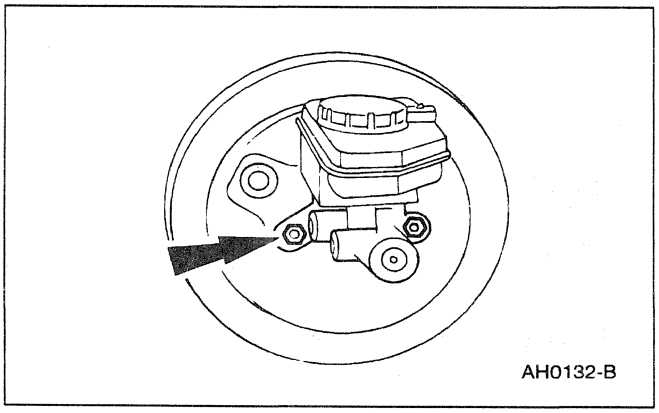
AH0132-B

5. Remove the nuts retaining the brake master cylinder (2140) to the power brake booster (2005) . Remove the brake master cylinder .

REMOVAL AND INSTALLATION (Continued)

Installation

1. Follow the removal procedure in reverse order.
   - Bleed the system. Refer to Section 206-00.

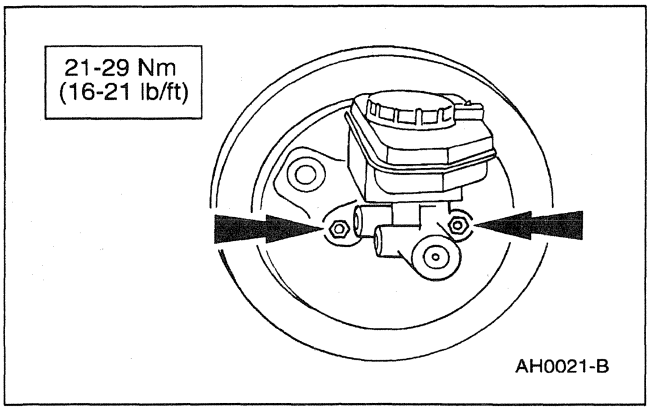

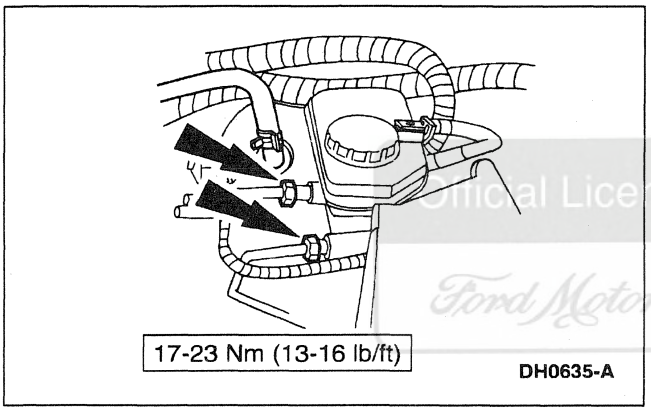

Official Licensed Product
Ford Motor Company

SPECIFICATIONS

General Specifications

Item	Specification
Fluid	
High-Performance DOT 3 Brake Fluid C6AZ-19542-AB	ESA-M6C25-A

Torque Specifications

Description[a]	Nm	Lb/Ft
Master Cylinder to Booster	21-29	16-21
Pedal Support Bracket-to-Cowl Bolt	16-30	12-22
Brake Hose-to-Caliper Bolt	40-55	30-40
Brake Pedal Pivot Bolt Nut	14-27	11-19

(Continued)

Torque Specifications

Description[a]	Nm	Lb/Ft
Brake Booster Retaining Nuts	21-29	16-21
Rear Bracket Outlet Tube Nuts	17-23	13-16
Brake Pressure Control Valve Inlet Tube Nuts	17-23	13-16
Front and Rear Caliper Hose Bracket Screw	13-15	10-11
Brake Tube to Brake Hose	17-23	13-16
Brake Tube to Master Cylinder	17-23	13-16

a All hydraulic lines must be tightened to the specific torque value and be free of fluid leakage.

SECTION 206-07 Power Brake Actuation

VEHICLE APPLICATION: Mark VIII

SUBJECT **PAGE**

DESCRIPTION AND OPERATION
Brake Booster 206-07-2
DIAGNOSIS AND TESTING
Power Brake System 206-07-3
REMOVAL AND INSTALLATION
Brake Booster 206-07-3
SPECIFICATIONS 206-07-6

Official Licensed Product
Ford Motor Company

DESCRIPTION AND OPERATION

Brake Booster

⚠ WARNING: BRAKE FLUID CONTAINS POLYGLYCOL ETHERS AND POLYGLYCOLS. AVOID CONTACT WITH EYES. WASH HANDS THOROUGHLY AFTER HANDLING. IF BRAKE FLUID CONTACTS EYES, FLUSH EYES WITH RUNNING WATER FOR 15 MINUTES. GET MEDICAL ATTENTION IF IRRITATION PERSISTS. IF TAKEN INTERNALLY, DRINK WATER AND INDUCE VOMITING. GET MEDICAL ATTENTION IMMEDIATELY.

The diaphragm-type power brake booster (2005) :

- is self-contained.
- is mounted on the engine side of the dash panel.
- uses engine intake manifold vacuum and atmospheric pressure for its power.
- must be replaced with a new power brake booster if it becomes damaged or inoperative. It is serviced only as an assembly.

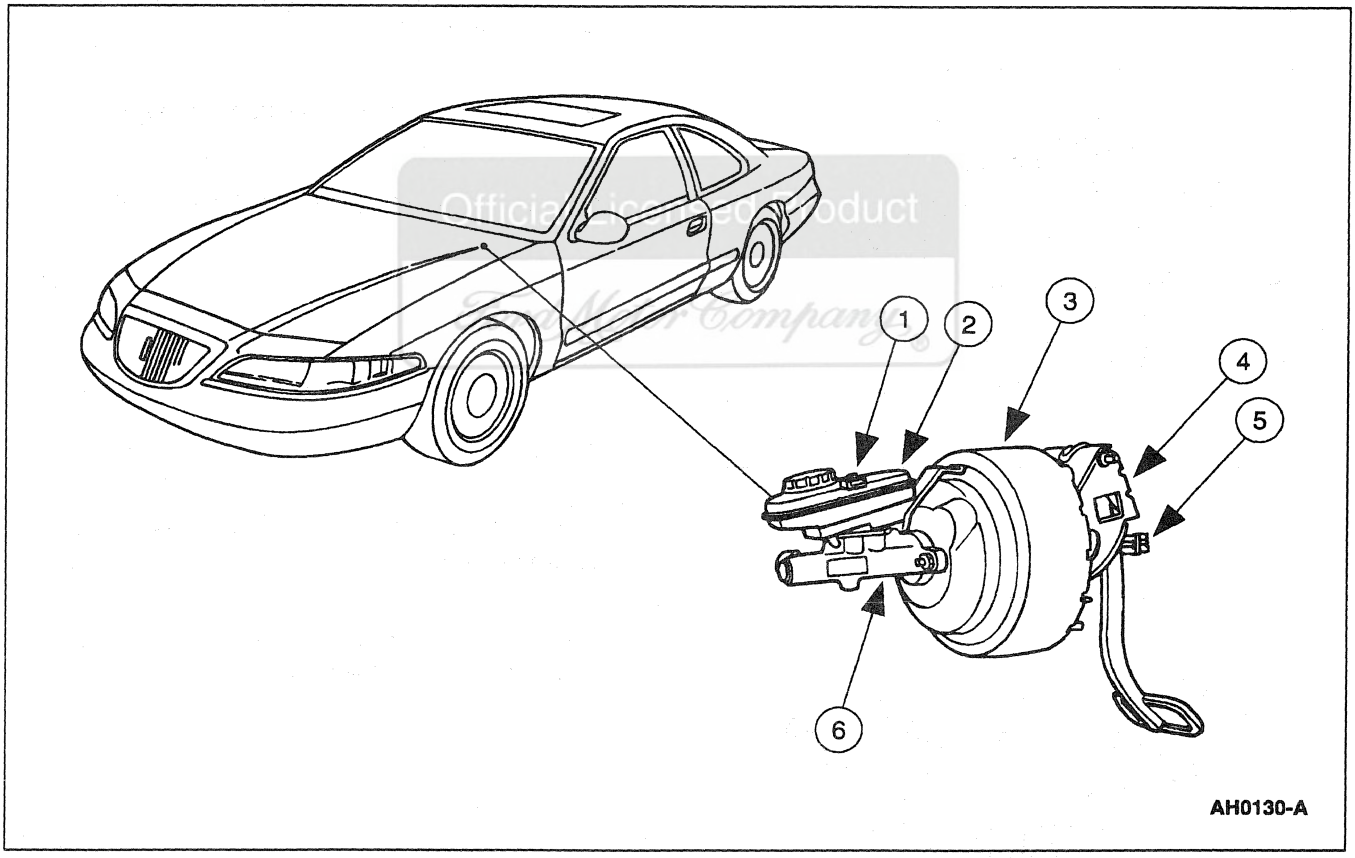

Item	Part Number	Description
1	—	Fluid Level Sensor (Part of 2C217)
2	2C246	Hydraulic Control Unit Reservoir

(Continued)

Item	Part Number	Description
3	2005	Power Brake Booster
4	2455	Brake Pedal
5	13480	Stoplight Switch
6	2140	Brake Master Cylinder

DIAGNOSIS AND TESTING

Power Brake System

Refer to Section 206-00.

REMOVAL AND INSTALLATION

Brake Booster

Removal

1. Disconnect the battery ground cable (14301); refer to Section 414-01.
2. Remove the windshield wiper motor (17504); refer to Section 501-16.
3. Disconnect the power brake booster hose.
   1 Compress the clamp.
   2 Disconnect the power brake booster hose.

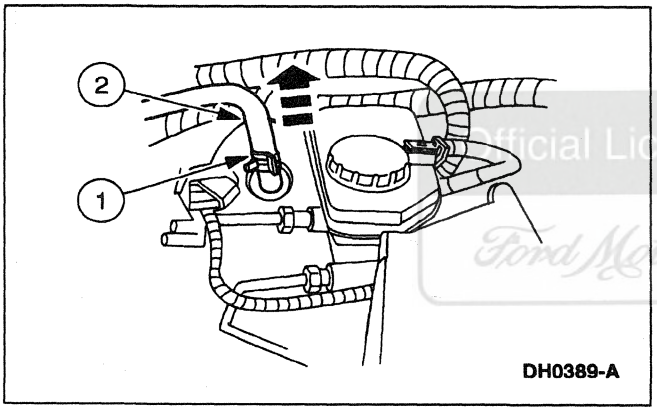

Official Licensed Product
Ford Motor Company

4. Remove the brake master cylinder (2140); refer to Section 206-06.
5. Disconnect the harness connectors. Position the wire harness out of the way.

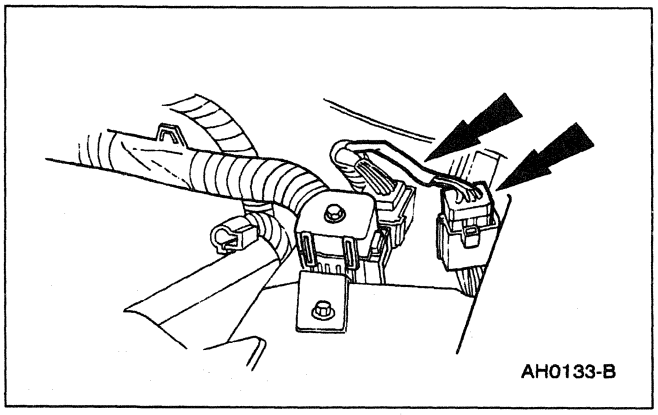

REMOVAL AND INSTALLATION (Continued)

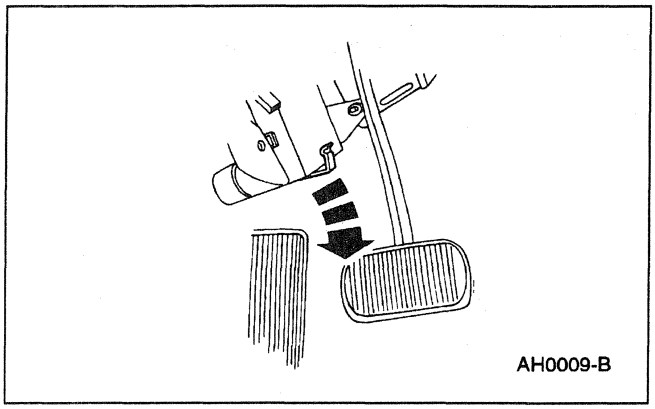

6. Working inside the vehicle below the instrument panel (04320) , remove the retaining clip from the powertrain control module (PCM)(12A650) .

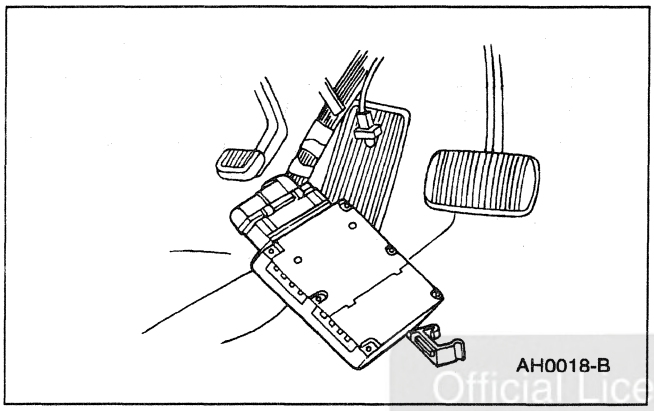

7. Position the powertrain control module out of the way.

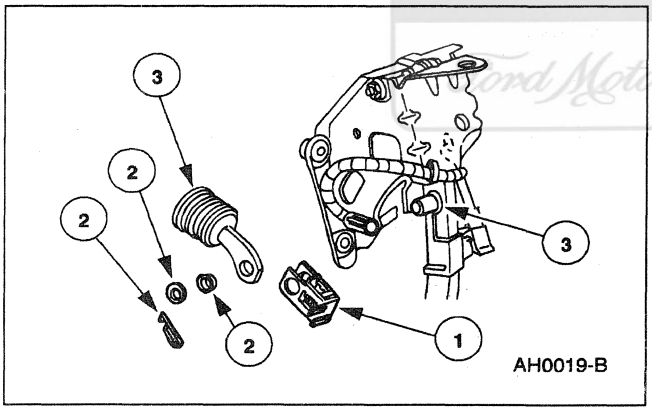

8. Remove the power brake booster push rod from the brake pedal.
   1 Disconnect the electrical connector from the stoplight switch (13480) .
   2 Remove the hairpin retainer and the push rod spacer.
   3 Remove the push rod, the stoplight switch and the push rod bushing.

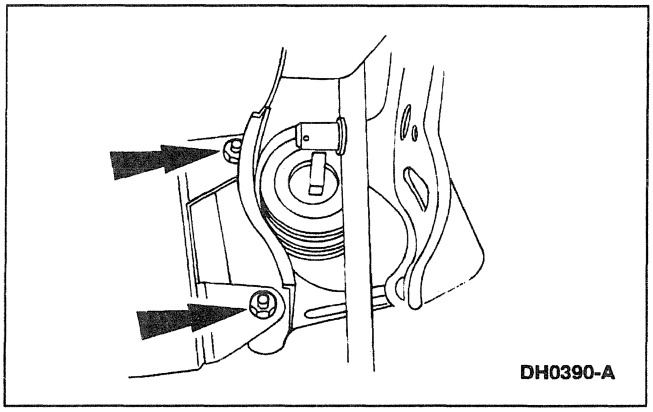

9. Remove the processor bracket-to-brake booster retaining nuts. Position the bracket out of the way.

Official Licensed Product
Ford Motor Company

REMOVAL AND INSTALLATION (Continued)

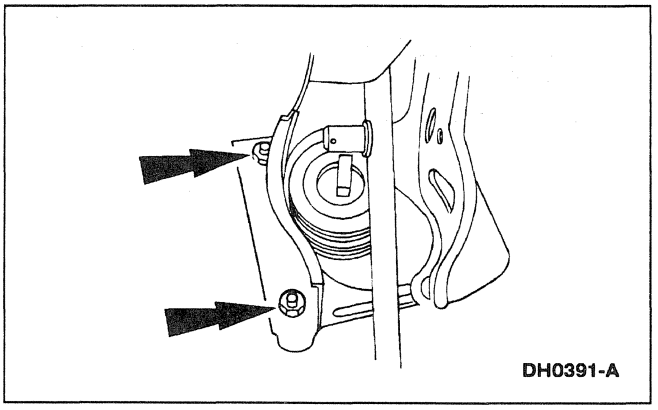

10. Remove the brake booster retaining nuts.

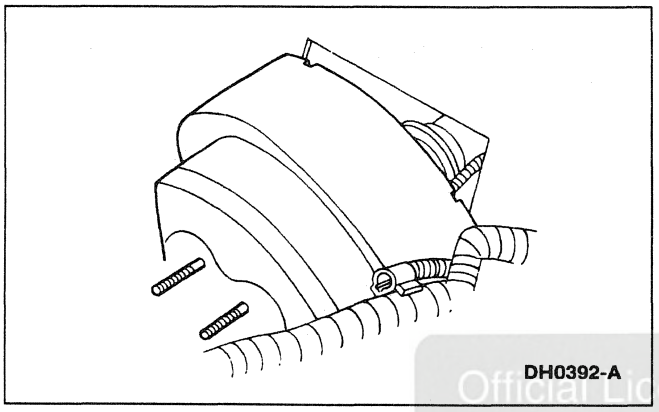

11. Inside the engine compartment, move the power brake booster (2005) forward until the booster studs clear the dash panel. Rotate front of the power brake booster inboard (toward engine) and remove the power brake booster.

Official Licensed Product
Ford Motor Company

Installation

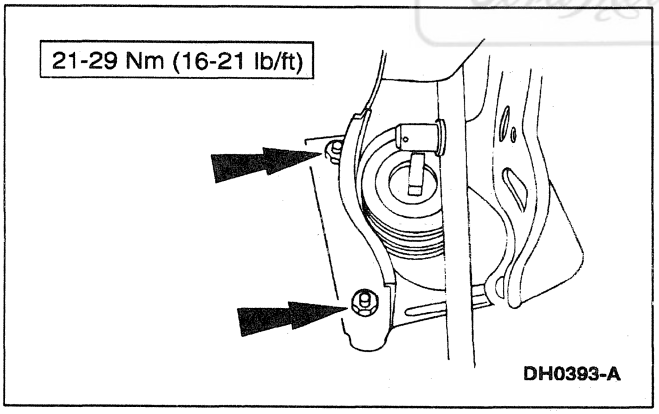

1. Follow the removal procedure in reverse order.

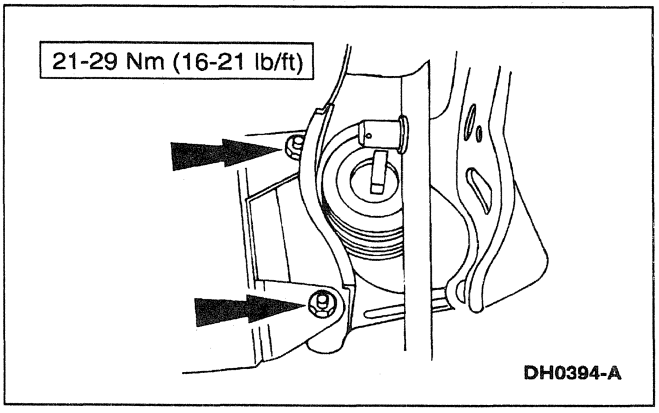

SPECIFICATIONS

Torque Specifications

Description	Nm	Lb/Ft
Power Brake Booster Retaining Nut	21-29	16-21
Processor Bracket to Brake Booster Retaining Nuts	21-29	16-21

Official Licensed Product
Ford Motor Company

SECTION 206-09 Anti-Lock Control — Anti-Wheelspin Control

VEHICLE APPLICATION: Mark VIII

SUBJECT **PAGE**

DESCRIPTION AND OPERATION
Anti-Lock Control — Anti-Wheelspin Control....206-09-2
Anti-Lock Brake Control Module....206-09-5
Anti-Lock Brake Sensor....206-09-6
Anti-Lock Brake System....206-09-4
Hydraulic Control Unit....206-09-5
Traction Control....206-09-4
DIAGNOSIS AND TESTING
Anti-Lock Control — Anti-Wheelspin Control....206-09-6
Inspection and Verification....206-09-6
Pinpoint Tests....206-09-10
Symptom Chart....206-09-9
REMOVAL AND INSTALLATION
Hydraulic Control Unit — Electronic (EHCU)....206-09-37
Module — Anti-Lock Brake Control....206-09-39
Sensor — Anti-Lock Brake, Front....206-09-40
Sensor — Anti-Lock Brake, Rear....206-09-42
Sensor Indicator — Front....206-09-43
Sensor Indicator — Rear....206-09-43
SPECIFICATIONS....206-09-43

Official Licensed Product
Ford Motor Company

DESCRIPTION AND OPERATION

Anti-Lock Control — Anti-Wheelspin Control

⚠ WARNING: BRAKE FLUID CONTAINS POLYGLYCOL ETHERS AND POLYGLYCOLS. AVOID CONTACT WITH EYES. WASH HANDS THOROUGHLY AFTER HANDLING. IF BRAKE FLUID CONTACTS EYES, FLUSH EYES WITH RUNNING WATER FOR 15 MINUTES. GET MEDICAL ATTENTION IF IRRITATION PERSISTS. IF TAKEN INTERNALLY, DRINK WATER AND INDUCE VOMITING. GET MEDICAL ATTENTION IMMEDIATELY.

The Mark VIII is equipped with 4-wheel anti-lock brake system (ABS) with optional traction control (TC).

The anti-lock brake system:

- Prevents wheel lock-up by automatically modulating brake pressure during an emergency stop.
- Allows the driver to maintain steering control and stop the vehicle in the shortest possible distance under most conditions.

The traction control system, if equipped, controls wheelspin by modulating engine torque and applying then releasing the appropriate rear brake to restore traction when driving on slippery or loose surfaces.

Official Licensed Product
Ford Motor Company

DESCRIPTION AND OPERATION (Continued)

Anti-Lock Control — Anti-Wheelspin Components

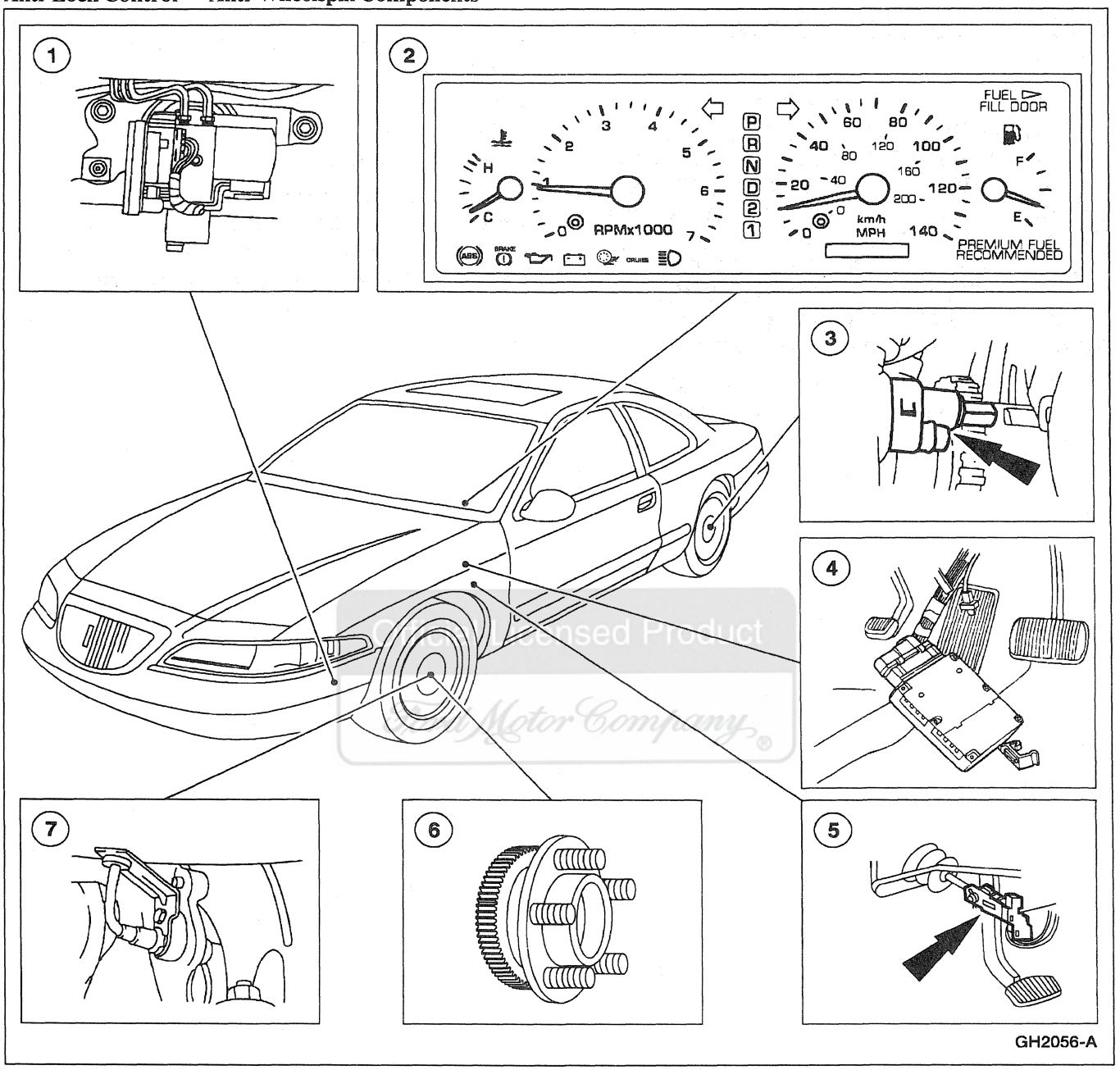

Item	Part Number	Description
1	2C266	Electronic Hydraulic Control Unit (EHCU)
2	10849	Hybrid Electronic Cluster (HEC)
3	2C190	Rear Anti-Lock Brake Sensor
4	12A650	Powertrain Control Module

Item	Part Number	Description
5	13480	Brake Pedal Position (BPP) Switch
6	2C182	Anti-Lock Brake Sensor Indicator
7	2C204	Front Anti-Lock Brake Sensor

(Continued)

DESCRIPTION AND OPERATION (Continued)

Anti-Lock Brake System

The anti-lock brake system consists of the following components:

- Hydraulic control unit (HCU).
- Anti-lock brake control module.
- Front anti-lock brake sensors/rear anti-lock brake sensors.

Anti-lock brake system (ABS) operates as follows:

- When the brakes are applied, fluid is forced from the brake master cylinder outlet ports to the HCU inlet ports. This pressure is transmitted through four normally open solenoid valves contained inside the HCU, then through the outlet ports of the HCU to each wheel.
- The primary (rear) circuit of the brake master cylinder (2140) feeds the right front and left rear brakes.
- The secondary (front) circuit of the brake master cylinder feeds the left front and right rear brakes.
- If the anti-lock brake control module senses a wheel is about to lock, based on anti-lock brake sensor data, it closes the normally open solenoid valve for that circuit. This prevents any more fluid from entering that circuit.
- The anti-lock brake control module then looks at the anti-lock brake sensor signal from the affected wheel again.
- If that wheel is still decelerating, it opens the solenoid valve for that circuit.
- Once the affected wheel comes back up to speed, the anti-lock brake control module returns the solenoid valves to their normal condition allowing fluid flow to the affected brake.
- The anti-lock brake control module monitors the electromechanical components of the system.
- Malfunction of the anti-lock brake system will cause the anti-lock brake control module to shut off or inhibit the system. However, normal power-assisted braking remains.
- Malfunctions are indicated by a warning indicator on the hybrid electronic cluster (HEC).
- Loss of hydraulic fluid in the brake master cylinder will disable the anti-lock system.
- The 4-wheel anti-lock brake system is self-monitoring. When the ignition switch is turned to the RUN position, the anti-lock brake control module will perform a preliminary self-check on the anti-lock electrical system indicated by a three second illumination of the yellow ABS warning indicator in the HEC.
- During vehicle operation, including normal and anti-lock braking, the anti-lock brake control module monitors all electrical anti-lock functions and some hydraulic operations.
- Each time the vehicle is driven, as soon as vehicle speed reaches approximately 20 km/h (12 mph), the anti-lock brake control module turns on the pump motor for approximately one-half second. At this time, a mechanical noise may be heard. This is a normal function of the self-check by the anti-lock brake control module.
- Most malfunctions of the anti-lock brake system and traction control system, if equipped, will cause the yellow ABS warning indicator to be illuminated.

Traction Control

The traction control system, if equipped, consists of or uses the following components:

- Anti-lock brake control module.
- Powertrain control module (PCM)(12A650).
- Front anti-lock brake sensor.
- Rear anti-lock brake sensor.
- Vehicle message center.

The traction control system:

- Is operational when the ignition switch is in the RUN position.
- Can be disabled by the driver entering the Traction Control OFF setting in the vehicle message center. The traction control system will reset and return to the Traction Control ON setting when the ignition switch is cycled.
- Is governed by the anti-lock brake control module.
- Applies and releases the appropriate rear brake to reduce wheelspin and aid traction if one or both rear wheels lose traction and begin to spin during acceleration.

Ford Motor Company

DESCRIPTION AND OPERATION (Continued)

- Interacts with the powertrain control module to reduce engine torque if one or both rear wheels lose traction and begin to spin during acceleration.
- Automatically stops traction control system cycling if the brakes are manually applied during traction control system operation.
- If in operation continually on slippery roads, the anti-lock brake control module may disable the system to prevent overheating of the rear brakes. The message center will display TRACTION CONTROL DISABLED.
- When the cool down time limit expires traction control is restored. (Anti-lock braking is fully functional during the cool down period.)
- When the traction control system is disabled either by the driver or by the anti-lock brake control module, both rear brake modulation and engine torque modulation are disabled.
- With the traction control system on, brake modulation to the spinning wheel is achieved by the anti-lock brake control module closing the isolation valves to the non-affected wheels and running the pump motor that provides hydraulic pressure for brake modulation to the spinning wheel.
- Engine torque modulation is achieved by the anti-lock brake control module interacting with the powertrain control module to regulate fuel and spark.

Hydraulic Control Unit

The HCU is located outside of the engine compartment on a bracket attached to the outer frame rail. It consists of the following components:

- Brake pressure control valve block.
- Pump motor.

Operation of the HCU is as follows:

- During normal braking, fluid passes through four normally open inlet valves, one to each wheel.
- If the anti-lock brake control module senses a wheel is about to lock, it pulses the appropriate inlet valve which closes that valve. This prevents any more fluid from entering the affected brake.
- The anti-lock brake control module then looks at that wheel again. If it is still decelerating, it opens the closed outlet valve which decreases the pressure trapped in the line.
- The traction control portion of the brake pressure control valve block contains two isolation valves for traction control function, one for the primary circuit and one for the secondary circuit. The isolation valves close during traction control operation to prevent front brake application.

The brake pressure control valve block and pump motor are replaced as an assembly.

Anti-Lock Brake Control Module

The anti-lock brake control module is mounted to the HCU.

It is an on-board diagnostic, replaceable unit consisting of two microprocessors and the necessary circuitry for their operation. The anti-lock brake control module monitors system operation during normal driving as well as during anti-lock braking and traction control cycling, if equipped.

Anti-lock brake control module operation is as follows:

- Under normal driving conditions, the microprocessor produces short test pulses to the solenoid valves that check the electrical system without any mechanical reaction.
- Impending wheel lock conditions trigger signals from the anti-lock brake control module that open and close the appropriate solenoid valves. This results in moderate pulsations in the brake pedal (2455) .
- During normal braking, the brake pedal feel will be identical to a standard brake system.
- Most faults which occur to the anti-lock brake system and the traction control will be stored as a diagnostic trouble code (DTC) in the keep-alive memory of the anti-lock brake control module. The DTCs can be retrieved by following the on-board diagnostic procedures. Refer to Diagnosis and Testing.

Ford Motor Company Official Licensed Product

DESCRIPTION AND OPERATION (Continued)

Anti-Lock Brake Sensor

The anti-lock brake system uses four active anti-lock brake sensors to determine the vehicle speed. The anti-lock brake sensors operates on the magneto-resistor principle. As the teeth on the anti-lock brake sensor indicator rotate past the stationary anti-lock brake sensor, a signal proportional to vehicle speed is generated and sent to the anti-lock brake control module.

The front anti-lock brake sensors are non-adjustable. The front anti-lock brake sensors and the front anti-lock brake sensor indicators are replaced separately.

The front anti-lock brake sensors are attached to the front wheel spindles (3105) and the front anti-lock brake sensor indicators are pressed onto the wheel hubs (1104) .

The rear anti-lock brake sensors are attached to the rear axle housings (4010) and the rear anti-lock brake sensor indicators are pressed onto the inner CV joints. Both are replaced separately.

DIAGNOSIS AND TESTING

Anti-Lock Control — Anti-Wheelspin Control

Refer to Electrical and Vacuum Troubleshooting Manual, Cell 42, Anti-Lock Brake System (ABS)/Traction Control for schematic and connector information.

Special Tool(s)

ST1137-A	73 Digital Multimeter or equivalent 105-R0051
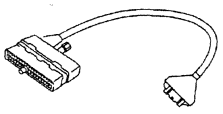 ST1684-A	ABS Breakout Box Adapter 418-063 (T97P-50-ALA)

(Continued)

Special Tool(s)

ST1449-A	EEC-IV 60-Pin Breakout Box or equivalent 418-005 (014-00322)
ST1217-A	New Generation STAR (NGS) Tester or equivalent 418-F048 (007-00500)

Inspection and Verification

1. Verify the customer's concern by operating the vehicle and applying the brakes under different conditions to duplicate the condition.
2. Inspect to determine if one of the following mechanical or electrical concerns apply:

Official Licensed Product Ford Motor Company

DIAGNOSIS AND TESTING (Continued)

Visual Inspection Chart

Mechanical	Electrical
• Parking brake cable binding. • Improperly inflated tires. • Mismatched wheels or tires on vehicle.	• Damaged Fuse(s). — Power Distribution Box Fuse 20 (30A) Fuse 21 (20A), Fuse Junction Panel, Fuse 21 (10A) • Damaged connectors or connections. • Circuitry open/shorted.

3. If the concern remains after the inspection, connect NGS Tester to the data link connector (DLC) located beneath the instrument panel, and select the vehicle to be tested from NGS Tester menu. If NGS Tester does not communicate with the vehicle:
   - check that the program card is properly installed.
   - check the connections to the vehicle.
   - check the ignition switch position.
4. If NGS Tester still does not communicate with the vehicle, refer to the New Generation STAR Tester manual.
5. Perform the DATA LINK DIAGNOSTIC TEST. If NGS Tester responds with:
   - CKT914, CKT915 or CKT70 = ALL ECUS NO RESP/NOT EQUIP, refer to Section 418-00.
   - NO RESP/NOT EQUIP for anti-lock brake control module, go to Pinpoint Test F.
   - SYSTEM PASSED, retrieve and record the continuous diagnostic trouble codes (DTCs), erase the continuous DTCs and perform self-test diagnostics for the anti-lock brake control module.
6. If the DTCs retrieved are related to the concern, go to Anti-Lock Brake Control Module Diagnostic Trouble Code (DTC) Index.
7. If no DTCs related to the concern are retrieved, proceed to Symptom Chart.

Anti-Lock Brake Control Module Diagnostic Trouble Code (DTC) Index

Official Licensed Product Ford Motor Company

DTC	DTC Caused By	Description	Action
B1342	ABS/TC	ECU Is Defective	REPLACE the anti-lock brake control module; REFER to Module — Anti-Lock Brake Control. TEST the system for normal operation.
B1485	ABS/TC	Brake Pedal Input Circuit Short to Battery	GO to Pinpoint Test D.
B1676	ABS/TC	Battery Voltage Out of Range	GO to Pinpoint Test E.
C1095	ABS/TC	ABS Hydraulic Pump Motor Circuit Failure	GO to Pinpoint Test A.
C1145	ABS/TC	RF Anti-Lock Brake Sensor Input Circuit Failure	GO to Pinpoint Test B.
C1155	ABS/TC	LF Anti-Lock Brake Sensor Input Circuit Failure	GO to Pinpoint Test B.
C1165	ABS/TC	RR Anti-Lock Brake Sensor Input Circuit Failure	GO to Pinpoint Test B.
C1175	ABS/TC	LR Anti-Lock Brake Sensor Input Circuit Failure	GO to Pinpoint Test B.
C1233	ABS/TC	LF Anti-Lock Brake Sensor Input Signal Missing	GO to Pinpoint Test C.
C1234	ABS/TC	RF Anti-Lock Brake Sensor Input Signal Missing	GO to Pinpoint Test C.
C1235	ABS/TC	RR Anti-Lock Brake Sensor Input Signal Missing	GO to Pinpoint Test C.
C1236	ABS/TC	LR Anti-Lock Brake Sensor Input Signal Missing	GO to Pinpoint Test C.
U1009	PCM	SCP Invalid or Missing Data for Engine Torque	PERFORM the PCM Self-Test.

(Continued)

DIAGNOSIS AND TESTING (Continued)

Anti-Lock Brake Control Module Diagnostic Trouble Code (DTC) Index

DTC	DTC Caused By	Description	Action
U1027	PCM	SCP Invalid or Missing Data for Engine RPM	PERFORM the PCM Self-Test.
U1042	MC	SCP Invalid or Missing Data for Traction Control	PERFORM the MC Self-Test.
U1051	LCM	SCP Invalid or Missing Data for Brakes	PERFORM the LCM Self-Test.
U1059	PCM	SCP Invalid or Missing Data for Transmission/Transaxle/PRNDL	PERFORM the PCM Self-Test.

Anti-Lock Brake Control Module Parameter Identification (PID) Index

Display	Description	Content
CCNTABS	Number of Continuous DTCs on ABS	one count per bit
T/ARVAL	Right T/A Control Valve Output Status	ENABLED, DISABLED
T/ALVAL	Left T/A Control Valve Output Status	ENABLED, DISABLED
BOO__ABS	Brake Pedal Position (BPP) Switch Input	ON, OFF
ABSRR__O	Right Rear ABS Outlet Valve	ON, OFF
ABSLR__O	Left Rear ABS Outlet Valve	ON, OFF
ABSRF__O	Right Front ABS Outlet Valve	ON, OFF
ABSLF__O	Left Front ABS Outlet Valve	ON, OFF
ABSRF__I	Right Front ABS Inlet Valve	ON, OFF
ABSLF__I	Left Front ABS Inlet Valve	ON, OFF
ABSRR__I	Right Rear ABS Inlet Valve	ON, OFF
ABSLR__I	Left Rear ABS Inlet Valve	ON, OFF
LF__WSPD	Left Front Wheel Speed	0-255 KPH
RF__WSPD	Right Front Wheel Speed	0-255 KPH
LR__WSPD	Left Rear Wheel Speed	0-255 KPH
RR__WSPD	Right Rear Wheel Speed	0-255 KPH

Anti-Lock Brake Control Module Active Command Index

Active Command	Display	Action
ABS OUTPUT CONTROL	PMP MOTOR	ON, OFF
	LF INLET	ON, OFF
	LF OUTLET	ON, OFF
	RF INLET	ON, OFF
	RF OUTLET	ON, OFF
	LR INLET	ON, OFF
	LR OUTLET	ON, OFF
	RR INLET	ON, OFF
	RR OUTLET	ON, OFF
TRACTION CONTROL	TC__RVAL	ON, OFF
	TC__LVAL	ON, OFF

DIAGNOSIS AND TESTING (Continued)

Symptom Chart

Symptom Chart

Condition	Possible Source	Action
• No Communication With the Module — Anti-Lock Brake Control	• Fuse. • Anti-lock brake control module. • Circuitry.	• GO to Pinpoint Test F.
• Spongy Brake Pedal With No Warning Indicator	• Air in brake hydraulic system.	• GO to Pinpoint Test G.
• Poor Vehicle Tracking During Anti-Lock Function	• Air in brake hydraulic system. • Hydraulic control unit (HCU). • Base brake system.	• GO to Pinpoint Test H. • REFER to Section 206-00.
• The Traction Control Is Inoperative	• Anti-lock brake control module. • Hydraulic control unit (HCU). • Base brake system. • Thermal model (will reset after brakes cool down).	• GO to Pinpoint Test J. • REFER to Section 206-00.
• The Yellow ABS Warning Indicator Does Not Self-Check	• Anti-lock brake control module. • Circuitry. • HEC.	• GO to Pinpoint Test K.
• The Yellow ABS Indicator and Traction Control Active Indicator Always On	• Circuitry. • HEC. • Anti-lock brake control module.	• GO to Pinpoint Test L.
• Traction Control Active Indicator Always/Never On	• Circuitry. • Message center display. • Anti-lock brake control module.	• REFER to Section 413-08.
• The Traction Control Cannot Be Disabled	• Circuitry. • Traction control switch. • Anti-lock brake control module.	• GO to Pinpoint Test M.
• No Communication With the Module — Hybrid Electronic Cluster (HEC)	• Fuse. • HEC. • Circuitry.	• GO to Pinpoint Test N.
• The CHECK TRACTION CONTROL Message Is Temporarily Displayed	• Thermal model (will reset after brakes cool down).	• ALLOW brakes to cool down. TEST the system for normal operation.

Ford Licensed Product Ford Motor Company

DIAGNOSIS AND TESTING (Continued)

Pinpoint Tests

PINPOINT TEST A: DTC C1095 — ABS HYDRAULIC PUMP MOTOR CIRCUIT FAILURE

TEST CONDITIONS	TEST DETAILS/RESULTS/ACTIONS
A1 CHECK ABS PUMP	
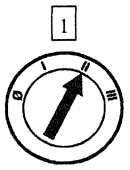	• Is the ABS pump motor running all the time? → **Yes** REPLACE the anti-lock brake control module; REFER to Module — Anti-Lock Brake Control. TEST the system for normal operation. → **No** GO to **A2**.
A2 CHECK PUMP OPERATION	
	[1] Trigger the anti-lock brake control module active command PMP MOTOR ON. • Does the ABS pump motor run? → **Yes** CLEAR the DTC. CHECK the yellow ABS warning indicator while driving the vehicle above 32 kph (20 mph) and no brakes applied until the vehicle exceeds 32 kph (20 mph). If the yellow ABS warning indicator illuminates. REPLACE the anti-lock brake control module; REFER to Module — Anti-Lock Brake Control. TEST the system for normal operation. If the yellow ABS warning indicator does not illuminate, system is OK. → **No** TRIGGER the anti-lock brake control module active command PMP MOTOR OFF. GO to **A3**.

(Continued)

Official Licensed Product Ford Motor Company

DIAGNOSIS AND TESTING (Continued)

PINPOINT TEST A: DTC C1095 — ABS HYDRAULIC PUMP MOTOR CIRCUIT FAILURE (Continued)

TEST CONDITIONS	TEST DETAILS/RESULTS/ACTIONS
A3 CHECK POWER DISTRIBUTION BOX FUSES 20 (30A) AND 21 (20A)	
1 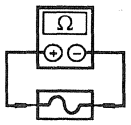 Power Distribution Box Fuse 20 (30A) 2 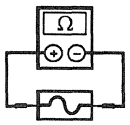 Power Distribution Box Fuse 21 (20A)	• Are the fuses OK? → **Yes** GO to **A4**. → **No** REPLACE the failed fuse(s). TEST the system for normal operation. If the fuse(s) fails again, CHECK for short to ground. REPAIR as necessary. TEST the system for normal operation.
A4 CHECK CIRCUIT 483 (R) AND CIRCUIT 533 (T/R) FOR AN OPEN	
1 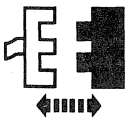 Anti-Lock brake Control Module C114 3 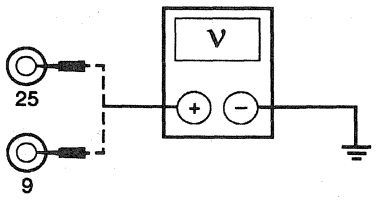 GH2042-A	2 Connect EEC-IV 60-Pin Breakout Box. 3 Measure the voltage between EEC-IV 60-Pin Breakout Box pin 9, circuit 533 (T/R), and ground; and between EEC-IV 60-Pin Breakout Box pin 25, circuit 483 (R), and ground. • Are the voltages greater than 10 volts? → **Yes** GO to **A5**. → **No** REPAIR the circuit in question. CLEAR the DTCs. TEST the system for normal operation.

Official Licensed Product
Ford Motor Company

(Continued)

DIAGNOSIS AND TESTING (Continued)

PINPOINT TEST A: DTC C1095 — ABS HYDRAULIC PUMP MOTOR CIRCUIT FAILURE (Continued)

TEST CONDITIONS	TEST DETAILS/RESULTS/ACTIONS
A5 CHECK CIRCUIT 57 (BK) FOR AN OPEN	
1 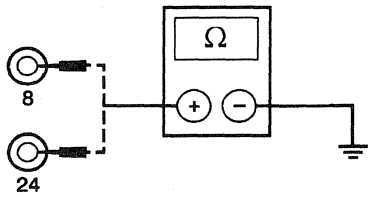 GH1805-A	1 Measure the resistance between EEC-IV 60-Pin Breakout Box pin 8, circuit 57 (BK), and ground; and between EEC-IV 60-Pin Breakout Box pin 24, circuit 57 (BK), and ground. • Are the resistances less than 5 ohms? → **Yes** GO to **A6**. → **No** REPAIR circuit 57 (BK). CLEAR the DTCs. TEST the system for normal operation.
A6 CHECK THE PUMP MOTOR FOR PROPER OPERATION	
1 Pump Motor Connector 2 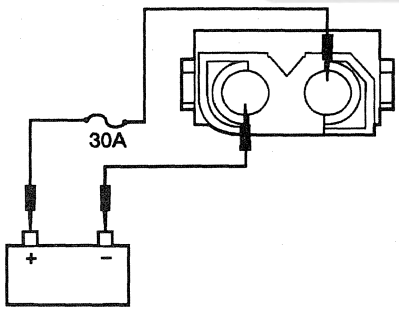 GH1811-A	2 Connect a heavy gauge jumper between the negative battery post and pump motor connector, brown wire; and momentarily connect a jumper between the positive battery post and pump motor connector, red wire with a 30A in-line fuse. • Does the pump motor run? → **Yes** REPLACE the anti-lock brake control module; REFER to Module — Anti-Lock Brake Control. TEST the system for normal operation. → **No** REPLACE the EHCU; REFER to Hydraulic Control Unit — Electronic (EHCU). CLEAR the DTCs. TEST the system for normal operation.

Official Licensed Product
Ford Motor Company

DIAGNOSIS AND TESTING (Continued)

PINPOINT TEST B: DTC C1145 (RF), DTC C1155 (LF), DTC C1165 (RR), DTC C1175 (LR) — ANTI-LOCK BRAKE SENSOR INPUT CIRCUIT FAILURE

TEST CONDITIONS	TEST DETAILS/RESULTS/ACTIONS
B1 CHECK FOR SHORT TO POWER	

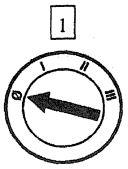

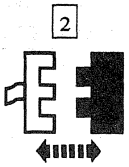

Anti-Lock Brake Control Module
C114

3 Connect EEC-IV 60-Pin Breakout Box.

5

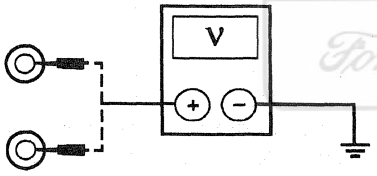

GH2043-A

5 Measure the voltage between EEC-IV 60-Pin Breakout Box Pins, and ground as follows:

DTC	Breakout Box Pin	Breakout Box Pin
C1145 (RF)	3 (circuit 514)	18 (circuit 516)
C1155 (LF)	13 (circuit 521)	11 (circuit 522)
C1165 (RR)	17 (circuit 523)	1 (circuit 524)
C1175 (LR)	10 (circuit 518)	2 (circuit 519)

- Is voltage present?

→ **Yes**
REPAIR the suspect anti-lock brake sensor circuit(s). CLEAR the DTCs. TEST the system for normal operation.

→ **No**
GO to **B3**.

(Continued)

Official Licensed Product
Ford Motor Company

DIAGNOSIS AND TESTING (Continued)

PINPOINT TEST B: DTC C1145 (RF), DTC C1155 (LF), DTC C1165 (RR), DTC C1175 (LR) — ANTI-LOCK BRAKE SENSOR INPUT CIRCUIT FAILURE (Continued)

TEST CONDITIONS	TEST DETAILS/RESULTS/ACTIONS
B2 CHECK FOR AN OPEN	

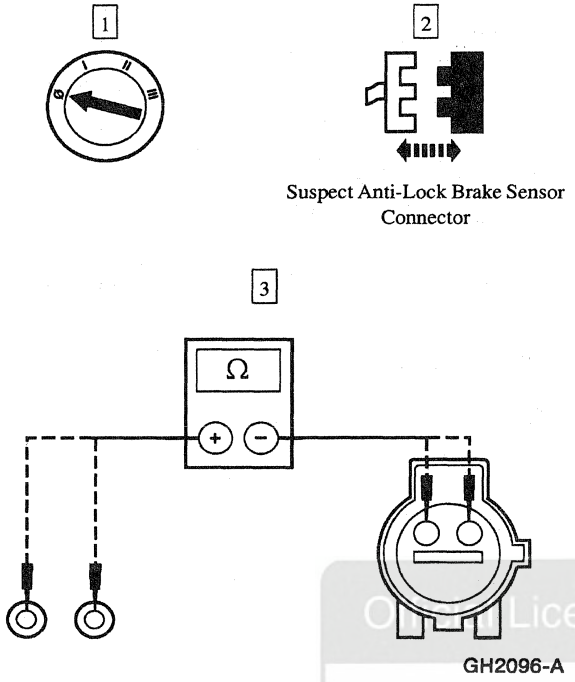

3 Measure the resistance between EEC-IV 60-Pin Breakout Box pins and anti-lock brake sensor connector as follows:

DTC	EEC-IV 60-Pin Breakout Box Pin	Anti-Lock Brake Sensor Connector
C1145 (RF)	3 (circuit 514)	C188, circuit 514 (Y/R)
C1145 (RF)	18 (circuit 516)	C188, circuit 516 (Y/BK)
C1155 (LF)	13 (circuit 521)	C189, circuit 521 (T/O)
C1155 (LF)	11 (circuit 522)	C189, circuit 522 (T/BK)
C1165 (RR)	17 (circuit 523)	C424, circuit 523 (R/PK)
C1165 (RR)	1 (circuit 524)	C424, circuit 524 (PK/BK)
C1175 (LR)	10 (circuit 518)	C400, circuit (518 LG/R)
C1175 (LR)	2 (circuit 519)	C400, circuit 519 (LG/BK)

- Are the resistances less than 5 ohms?

→ **Yes**
GO to **B3**.

→ **No**
REPAIR the circuit in question. CLEAR the DTCs. TEST the system for normal operation.

(Continued)

Ford Motor Company

DIAGNOSIS AND TESTING (Continued)

PINPOINT TEST B: DTC C1145 (RF), DTC C1155 (LF), DTC C1165 (RR), DTC C1175 (LR) — ANTI-LOCK BRAKE SENSOR INPUT CIRCUIT FAILURE (Continued)

TEST CONDITIONS	TEST DETAILS/RESULTS/ACTIONS
B3 CHECK FOR SHORT TO GROUND	
1 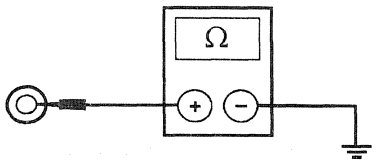 GH2046-A	1 Measure the resistance between EEC-IV 60-Pin Breakout Box Pin, and ground as follows: DTC / EEC-IV 60-Pin Breakout Box Pin / EEC-IV 60-Pin Breakout Box Pin C1145 (RF) / 3 (circuit 514) / 18 (circuit 516) C1155 (LF) / 13 (circuit 521) / 11 (circuit 522) C1165 (RR) / 17 (circuit 523) / 1 (circuit 524) C1175 (LR) / 10 (circuit 518) / 2 (circuit 519) • Are the resistances greater than 10,000 ohms? → **Yes** RECONNECT the anti-lock brake control module C114. GO to **B4.** → **No** REPAIR the circuit in question. CLEAR the DTCs. TEST the system for normal operation.
B4 CHECK THE ANTI-LOCK BRAKE CONTROL MODULE OUTPUT	
1 2 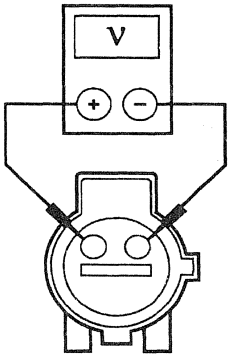 GH2097-A	2 Measure the voltage between the suspect anti-lock brake sensor as follows: DTC / Suspect Anti-Lock Brake Sensor Circuit / Suspect Anti-Lock Brake Sensor Circuit C1145 (RF) / 514 (Y/R) / 516 (Y/BK) C1155 (LF) / 521 (T/O) / 522 (T/BK) C1165 (RR) / 523 (R/PK) / 524 (PK/BK) C1175 (LR) / 518 (LG/R) / 519 (LG/BK)

Official Licensed Product
Ford Motor Company

(Continued)

DIAGNOSIS AND TESTING (Continued)

PINPOINT TEST B: DTC C1145 (RF), DTC C1155 (LF), DTC C1165 (RR), DTC C1175 (LR) — ANTI-LOCK BRAKE SENSOR INPUT CIRCUIT FAILURE (Continued)

TEST CONDITIONS	TEST DETAILS/RESULTS/ACTIONS
B4 CHECK THE ANTI-LOCK BRAKE CONTROL MODULE OUTPUT (Continued)	
	• Is the voltage greater than 9 volts? → **Yes** REPLACE the suspect anti-lock brake sensor; REFER to Sensor — Anti-Lock Brake, Rear or Sensor — Anti-Lock Brake, Front. CLEAR the DTCs. TEST the system for normal operation. → **No** REPLACE the anti-lock brake control module; REFER to Module — Anti-Lock Brake Control. TEST the system for normal operation.

PINPOINT TEST C: DTC C1233 (LF), DTC C1234 (RF), DTC C1235 (RR), DTC C1236 (LR) — ANTI-LOCK BRAKE SENSOR INPUT SIGNAL MISSING

TEST CONDITIONS	TEST DETAILS/RESULTS/ACTIONS
C1 CHECK THE ANTI-LOCK BRAKE SENSOR	
	1 Check the suspect anti-lock brake sensor mounting. Check the suspect anti-lock brake sensor for excessive dirt build-up, metal obstructions, improper harness routing, and chafing. • Is the suspect anti-lock brake sensor OK? → **Yes** GO to **C2**. → **No** REPAIR or REPLACE as necessary. CLEAR the DTCs. TEST the system for normal operation.

Official Licensed Product
Ford Motor Company

(Continued)

DIAGNOSIS AND TESTING (Continued)

PINPOINT TEST C: DTC C1233 (LF), DTC C1234 (RF), DTC C1235 (RR), DTC C1236 (LR) — ANTI-LOCK BRAKE SENSOR INPUT SIGNAL MISSING (Continued)

TEST CONDITIONS	TEST DETAILS/RESULTS/ACTIONS
C2 CHECK THE ANTI-LOCK BRAKE SENSOR INDICATOR	
	1 Check the suspect anti-lock brake sensor indicator for corrosion, nicks, damaged teeth, proper mounting, alignment, wheel bearing end play, and consistent air gap. • Is the suspect anti-lock brake sensor indicator OK? → **Yes** REPLACE the suspect anti-lock brake sensor. REFER to Sensor — Anti-Lock Brake, Rear or Sensor — Antilock Brake, Front. → **No** REPAIR or REPLACE as necessary. CLEAR the DTCs. TEST the system for normal operation.

PINPOINT TEST D: DTC B1485 — BRAKE PEDAL INPUT CIRCUIT SHORT TO BATTERY

TEST CONDITIONS	TEST DETAILS/RESULTS/ACTIONS
D1 CHECK THE STOPLAMP OPERATION	
	1 Press the brake pedal. • Do the stoplamps operate properly? → **Yes** GO to **D2**. → **No** REFER to Section 417-01.
D2 CHECK CIRCUIT 511 (LG) FOR SHORT TO POWER	
NOTE: Make sure the brake pedal is released for this step.	
1 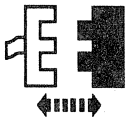 Anti-Lock Brake Control Module C114	2 Connect EEC-IV 60-Pin Breakout Box.

(Continued)

Official Licensed Product Ford Motor Company

DIAGNOSIS AND TESTING (Continued)

PINPOINT TEST D: DTC B1485 — BRAKE PEDAL INPUT CIRCUIT SHORT TO BATTERY (Continued)

TEST CONDITIONS	TEST DETAILS/RESULTS/ACTIONS
D2 CHECK CIRCUIT 511 (LG) FOR SHORT TO POWER (Continued)	
3 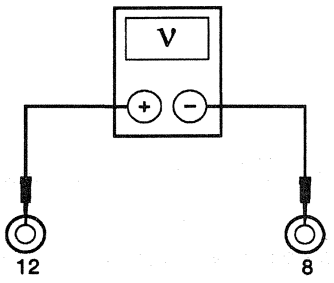 GH2055-A	3 Measure the voltage between EEC-IV 60-Pin Breakout Box pin 12, circuit 511 (LG), and EEC-IV 60-Pin Breakout Box pin 8, circuit 57 (BK). • Is voltage present? → **Yes** REPAIR circuit 511 (LG). CLEAR the DTCs. TEST the system for normal operation. → **No** RECONNECT the anti-lock brake control module C114. GO to **D3**.
D3 CHECK THE DTC	
1 2 3 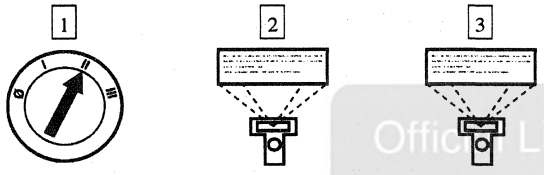 CLEAR the DTCs	3 Retrieve and document continuous DTCs. • Is DTC B1485 retrieved? → **Yes** REPLACE the anti-lock brake control module; REFER to Module — Anti-Lock Brake Control. TEST the system for normal operation. → **No** If a different DTC is retrieved; REFER to Anti-Lock Brake Control Module Diagnostic Trouble Code (DTC) index. If no DTCs are retrieved, System is OK.

Official Licensed Product
Ford Motor Company

DIAGNOSIS AND TESTING (Continued)

PINPOINT TEST E: DTC B1676 — BATTERY VOLTAGE OUT OF RANGE

TEST CONDITIONS	TEST DETAILS/RESULTS/ACTIONS
E1 CHECK THE BATTERY VOLTAGE	
NOTE: DTC B1676 will be retrieved if the vehicle has been jump started.	
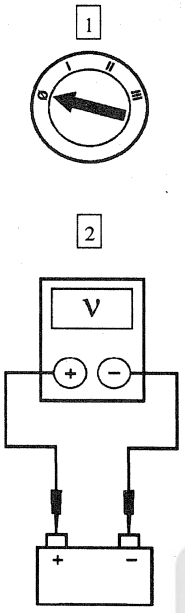 GL1223-A	2 Measure the voltage between positive and negative battery post. • Is the voltage between 10 and 16 volts? → **Yes** GO to **E2**. → **No** REFER to Section 414-00.
E2 CHECK THE ANTI-LOCK BRAKE CONTROL MODULE GROUND	
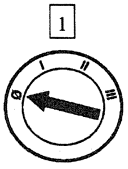 Anti-Lock Brake Control Module C114 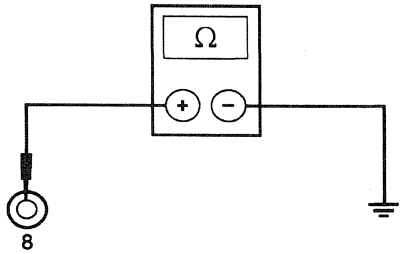 GH1982-A	3 Connect EEC-IV 60-Pin Breakout Box. 4 Measure the resistance between EEC-IV 60-Pin Breakout Box pin 8, circuit 57 (BK), and ground. • Is the resistance less than 5 ohms? → **Yes** GO to **E3**. → **No** REPAIR circuit 57 (BK). CLEAR the DTCs. TEST the system for normal operation.

Official Licensed Product Ford Motor Company

(Continued)

DIAGNOSIS AND TESTING (Continued)

PINPOINT TEST E: DTC B1676 — BATTERY VOLTAGE OUT OF RANGE (Continued)

TEST CONDITIONS	TEST DETAILS/RESULTS/ACTIONS
E3 CHECK CIRCUIT 57 (BK) FOR AN OPEN	
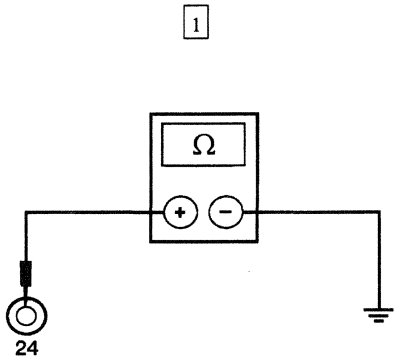 GH1983-A	1 Measure the resistance between EEC-IV 60-Pin Breakout Box pin 24, circuit 57 (BK), and ground. • Is the resistance less than 5 ohms? → **Yes** RECONNECT the anti-lock brake control module C114. GO to **E4**. → **No** REPAIR circuit 57 (BK). CLEAR the DTCs. TEST the system for normal operation.
E4 CHECK THE DTC	
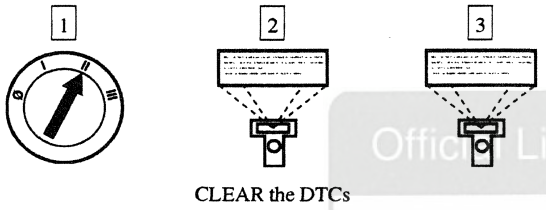 CLEAR the DTCs	3 Retrieve and document continuous DTCs. • Is DTC B1676 retrieved? → **Yes** REPLACE the anti-lock brake control module; REFER to Module — Anti-Lock Brake Control. TEST the system for normal operation. → **No** If a different DTC is retrieved; REFER to Anti-Lock Brake Control Module Diagnostic Trouble Code (DTC) index. If no DTCs are retrieved, System is OK.

Official Licensed Product
Ford Motor Company

DIAGNOSIS AND TESTING (Continued)

PINPOINT TEST F: NO COMMUNICATION WITH THE MODULE—ANTI-LOCK BRAKE CONTROL MODULE

TEST CONDITIONS	TEST DETAILS/RESULTS/ACTIONS
F1 CHECK POWER DISTRIBUTION BOX FUSES 20 (30A) AND 21 (20A)	
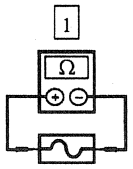 Power Distribution Box Fuse 20 (30A) 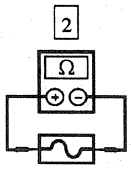 Power Distribution Box Fuse 21 (20A)	• Are the fuses OK? → **Yes** GO to **F2**. → **No** REPLACE the fuse(s) in question. TEST the system for normal operation. If the fuse(s) fails again, CHECK for short to ground. REPAIR as necessary.
F2 CHECK FUSE JUNCTION PANEL FUSE 21 (10A)	
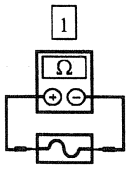 Fuse Junction Panel Fuse 21 (10A)	• Is the fuse OK? → **Yes** GO to **F3**. → **No** REPLACE the fuse. TEST the system for normal operation. If the fuse fails again, CHECK for short to ground. REPAIR as necessary.
F3 CHECK CIRCUIT 57 (BK) FOR OPEN	
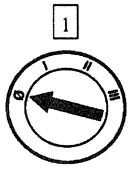 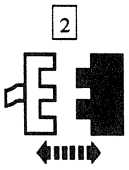 Anti-Lock Brake Control Module C114	3 Connect EEC-IV 60-Pin Breakout Box.

(Continued)

Official Licensed Product
Ford Motor Company

DIAGNOSIS AND TESTING (Continued)

PINPOINT TEST F: NO COMMUNICATION WITH THE MODULE—ANTI-LOCK BRAKE CONTROL MODULE (Continued)

TEST CONDITIONS	TEST DETAILS/RESULTS/ACTIONS
F3 CHECK CIRCUIT 57 (BK) FOR OPEN (Continued)	
4 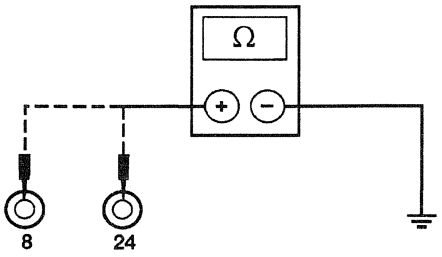 GH1967-A	4 Measure the resistance between EEC-IV 60-Pin Breakout Box pin 8, circuit 57 (BK), and ground; and between EEC-IV 60-Pin Breakout Box pin 24, circuit 57 (BK), and ground. • Are the resistances less than 5 ohms? → **Yes** GO to **F4**. → **No** REPAIR circuit 57 (BK). TEST the system for normal operation.
F4 CHECK CIRCUITS 601 (LB/PK) AND 533 (T/R) FOR OPEN	
1 3 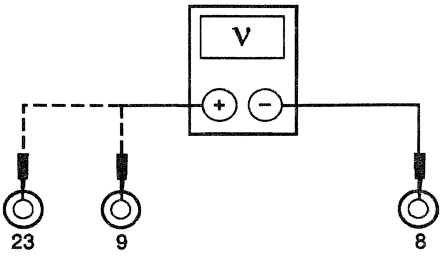 GH1968-A	2 Connect EEC-IV 60-Pin Breakout Box. 3 Measure the voltage between EEC-IV 60-Pin Breakout Box pin 23, circuit 601 (LB/PK), and EEC-IV 60-Pin Breakout Box pin 8, circuit 57 (BK); and between EEC-IV 60-Pin Breakout Box pin 9, circuit 533 (T/R), and EEC-IV 60-Pin Breakout Box pin 8, circuit 57 (BK). • Are the voltages greater than 10 volts? → **Yes** REFER to Section 418-00. → **No** REPAIR the circuit(s) in question. TEST the system for normal operation.

Official Licensed Product
Ford Motor Company

PINPOINT TEST G: SPONGY BRAKE PEDAL WITH NO WARNING INDICATOR

TEST CONDITIONS	TEST DETAILS/RESULTS/ACTIONS
G1 CHECK THE COMPONENTS MOUNTING	
	1 Inspect the brake pedal and the power brake booster/brake master cylinder for proper attachment.

(Continued)

DIAGNOSIS AND TESTING (Continued)

PINPOINT TEST G: SPONGY BRAKE PEDAL WITH NO WARNING INDICATOR (Continued)

TEST CONDITIONS	TEST DETAILS/RESULTS/ACTIONS
G1 CHECK THE COMPONENTS MOUNTING (Continued)	
	[2] Bleed the brake system. REFER to Section 206-00. • Is the brake pedal spongy? → **Yes** GO to **G2**. → **No** The brake system is operating properly. TEST the system for normal operation.
G2 BLEED THE BRAKE SYSTEM	
	[1] Rebleed the brake system. Refer to Section 206-00. • Is the brake pedal spongy? → **Yes** REFER to Section 206-00. → **No** The brake system is operating properly. TEST the system for normal operation.

Official Licensed Product Ford Motor Company

PINPOINT TEST H: POOR VEHICLE TRACKING DURING ANTI-LOCK FUNCTION

TEST CONDITIONS	TEST DETAILS/RESULTS/ACTIONS
H1 BLEED THE BRAKE SYSTEM	
[1] 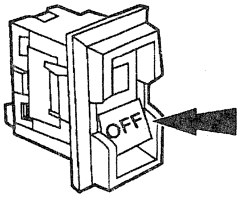 GF0605-A	[1] Place the air suspension switch in the OFF position. [2] Bleed the brake system. Refer to Section 206-00.

(Continued)

DIAGNOSIS AND TESTING (Continued)

PINPOINT TEST H: POOR VEHICLE TRACKING DURING ANTI-LOCK FUNCTION (Continued)

TEST CONDITIONS	TEST DETAILS/RESULTS/ACTIONS
H1 BLEED THE BRAKE SYSTEM (Continued)	
	3 Place the air suspension switch in the ON position after the vehicle is off the hoist. • Does the vehicle track poorly? → **Yes** GO to **H2**. → **No** The brake system is operating properly. TEST the system for normal operation.
H2 CHECK THE LF HCU VALVE OPERATION	
2 3 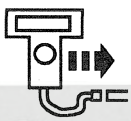 NGS	1 Place the air suspension switch in the OFF position. 4 Lift the vehicle and rotate all the wheels to make sure they turn freely (the vehicle must be in neutral). 5 Trigger the anti-lock brake control module active command PMP MOTOR ON for four seconds. (Trigger must be pushed twice. Each press runs the pump for two seconds.) 6 Apply moderate brake pedal effort. 7 Have an assistant attempt to rotate the LF wheel. • Does the LF wheel rotate? → **Yes** REPLACE the EHCU; REFER to Hydraulic Control Unit — Electronic (EHCU). TEST the system for normal operation. → **No** GO to **H3**.

Official Licensed Product
Ford Motor Company®

(Continued)

DIAGNOSIS AND TESTING (Continued)

PINPOINT TEST H: POOR VEHICLE TRACKING DURING ANTI-LOCK FUNCTION (Continued)

TEST CONDITIONS	TEST DETAILS/RESULTS/ACTIONS
H3 CHECK THE LF HCU VALVE RELEASE	
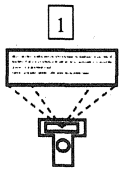	1 Trigger the anti-lock brake control module active command LF INLET ON and LF OUTLET ON. 2 Have an assistant turn the LF wheel using a two-foot breaker bar, immediately after pressing trigger (NGS Tester will energize the valves for only two seconds per trigger press). • Did the LF wheel turn? → **Yes** GO to **H4**. → **No** GO to **H10**.
H4 CHECK THE RF HCU VALVE OPERATION	
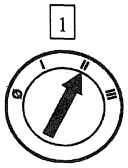	2 Trigger the anti-lock brake control module active command PMP MOTOR ON for four seconds. (Trigger must be pushed twice. Each press runs the pump for two seconds.) 3 Apply moderate brake pedal effort. 4 Have an assistant attempt to rotate the RF wheel. • Does the RF wheel rotate? → **Yes** REPLACE the EHCU; REFER to Hydraulic Control Unit — Electronic (EHCU). TEST the system for normal operation. → **No** GO to **H5**.

Official Licensed Product
Ford Motor Company

(Continued)

DIAGNOSIS AND TESTING (Continued)

PINPOINT TEST H: POOR VEHICLE TRACKING DURING ANTI-LOCK FUNCTION (Continued)

TEST CONDITIONS	TEST DETAILS/RESULTS/ACTIONS
H5 CHECK THE RF HCU VALVE RELEASE	
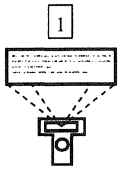	1 Trigger the anti-lock brake control module active command RF INLET ON and RF OUTLET ON. 2 Have an assistant turn the RF wheel using a two-foot breaker bar, immediately after pressing trigger (NGS Tester will energize the valves for only two seconds per trigger press). • Did the RF wheel turn? → **Yes** GO to **H6**. → **No** GO to **H10**.
H6 CHECK THE LR HCU VALVE OPERATION	
	2 Trigger the anti-lock brake control module active command PMP MOTOR ON for four seconds. (Trigger must be pushed twice. Each press runs the pump for two seconds.) 3 Apply moderate brake pedal effort. 4 Have an assistant attempt to rotate the LR wheel. • Does the LR wheel rotate? → **Yes** REPLACE the EHCU; REFER to Hydraulic Control Unit — Electronic (EHCU). TEST the system for normal operation. → **No** GO to **H7**.

Official Licensed Product
Ford Motor Company

(Continued)

DIAGNOSIS AND TESTING (Continued)

PINPOINT TEST H: POOR VEHICLE TRACKING DURING ANTI-LOCK FUNCTION (Continued)

TEST CONDITIONS	TEST DETAILS/RESULTS/ACTIONS
H7 CHECK THE LR HCU VALVE RELEASE	
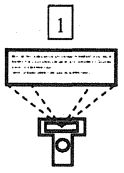 	1 Trigger the anti-lock brake control module active command LR INLET ON and LR OUTLET ON. 2 Have an assistant turn the LR wheel using a two-foot breaker bar, immediately after pressing trigger (NGS Tester will energize the valves for only two seconds per trigger press). • Did the LR wheel turn? → **Yes** GO to **H8**. → **No** GO to **H10**.
H8 CHECK THE RR HCU VALVE OPERATION	
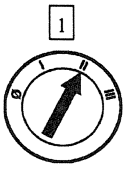 	2 Trigger the anti-lock brake control module active command PMP MOTOR ON for four seconds. (Trigger must be pushed twice. Each press runs the pump for two seconds.) 3 Apply moderate brake pedal effort. 4 Have an assistant attempt to rotate the RR wheel. • Does the RR wheel rotate? → **Yes** REPLACE the EHCU; REFER to Hydraulic Control Unit — Electronic (EHCU). TEST the system for normal operation. → **No** GO to **H9**.

Official Licensed Product
Ford Motor Company

(Continued)

DIAGNOSIS AND TESTING (Continued)

PINPOINT TEST H: POOR VEHICLE TRACKING DURING ANTI-LOCK FUNCTION (Continued)

TEST CONDITIONS	TEST DETAILS/RESULTS/ACTIONS
H9 CHECK THE RR HCU VALVE RELEASE	
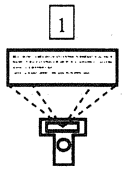	1 Trigger the anti-lock brake control module active command RR INLET ON and RR OUTLET ON. 2 Have an assistant turn the RR wheel using a two-foot breaker bar, immediately after pressing trigger (NGS Tester will energize the valves for only two seconds per trigger press). • Did the RR wheel turn? → **Yes** The anti-lock brake system is operating properly. TEST the system for normal operation. → **No** GO to **H10**.
H10 CHECK FOR DIAGNOSTIC TROUBLE CODES (DTCS)	
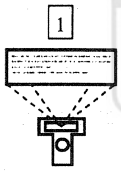	1 Retrieve and document continuous DTCs. • Are any DTCs retrieved? → **Yes** GO to Anti-Lock Brake Control Module Diagnostic Trouble Code (DTC) Index. → **No** REPLACE the EHCU; REFER to Hydraulic Control Unit — Electronic (EHCU). TEST the system for normal operation.

Ford Motor Company

PINPOINT TEST J: THE TRACTION CONTROL IS INOPERATIVE

TEST CONDITIONS	TEST DETAILS/RESULTS/ACTIONS
J1 CHECK FOR DTCS	
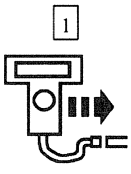 NGS 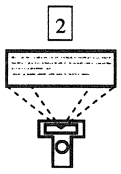	2 Retrieve and document continuous DTCs. • Are any DTCs retrieved? → **Yes** GO to Anti-Lock Brake Control Module Diagnostic Trouble Code (DTC) Index. → **No** GO to **J2**.

(Continued)

DIAGNOSIS AND TESTING (Continued)

PINPOINT TEST J: THE TRACTION CONTROL IS INOPERATIVE (Continued)

TEST CONDITIONS	TEST DETAILS/RESULTS/ACTIONS
J2 CHECK THE ABS OPERATION	
	[1] Test drive the vehicle. Check the ABS operation. • Does the ABS operate properly? → **Yes** GO to **J3**. → **No** REFER to Symptom Chart.
J3 CHECK THE DRIVER SETTING	
[1] 	[2] Press the message center vehicle setting switch until the message center displays TRACTION CONTROL. • Does the message read TRACTION CONTROL OFF? → **Yes** ENABLE the traction control and RETEST the system. → **No** REPLACE the anti-lock brake control module; REFER to Module — Anti-Lock Brake Control. TEST the system for normal operation.

Official Licensed Product
Ford Motor Company

DIAGNOSIS AND TESTING (Continued)

PINPOINT TEST K: THE YELLOW ABS WARNING INDICATOR DOES NOT SELF-CHECK

TEST CONDITIONS	TEST DETAILS/RESULTS/ACTIONS
K1 CHECK THE YELLOW ABS WARNING INDICATOR	
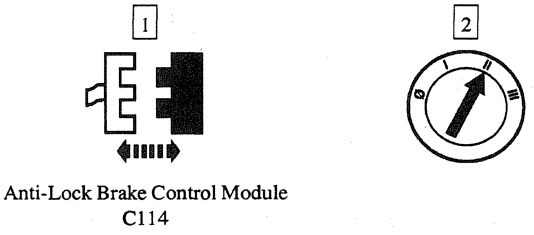 Anti-Lock Brake Control Module C114	• Is the yellow ABS warning indicator illuminated? → **Yes** GO to **K2**. → **No** REFER to Section 413-01.
K2 CHECK PROVE OUT	
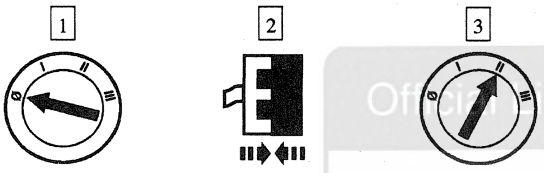 Anti-Lock Brake Control Module C114	• Does the yellow ABS warning indicator prove out for three seconds and then turn off? → **Yes** The yellow ABS warning indicator is working properly. TEST the system for normal operation. → **No** REPLACE the anti-lock brake control module; REFER to Module — Anti-Lock Brake Control. TEST the system for normal operation.

Official Licensed Product Ford Motor Company

DIAGNOSIS AND TESTING (Continued)

PINPOINT TEST L: THE YELLOW ABS WARNING INDICATOR AND TRACTION CONTROL ACTIVE INDICATOR ALWAYS ON

TEST CONDITIONS	TEST DETAILS/RESULTS/ACTIONS
L1 CHECK FOR DTCs	
1 2 3 NGS	3 Retrieve and document continuous DTCs for the anti-lock brake control module. • Are any DTCs retrieved? → **Yes** GO to Anti-Lock Brake Control Module Diagnostic Trouble Code (DTC) Index. → **No** REPLACE the hybrid electronic cluster (HEC); REFER to Section 413-01. TEST the system for normal operation.

PINPOINT TEST M: THE TRACTION CONTROL CAN NOT BE DISABLED

TEST CONDITIONS	TEST DETAILS/RESULTS/ACTIONS
M1 PERFORM THE ON-DEMAND SELF-TEST FOR THE MESSAGE CENTER	
	1 Perform the on-demand self-test for the message center. • Are any DTCs retrieved? → **Yes** If DTC U1043 is retrieved, REPLACE the anti-lock brake control module; REFER to Module — Anti-Lock Brake Control. TEST the system for normal operation. If any other DTCs are retrieved, REFER to Section 413-08. → **No** If unable to communicate with the message center, REFER to Section 413-08. If no DTCs are retrieved, REPLACE the message center. TEST the system for normal operation.

Official Licensed Product
Ford Motor Company

DIAGNOSIS AND TESTING (Continued)

PINPOINT TEST N: NO COMMUNICATION WITH THE MODULE — HYBRID ELECTRONIC CLUSTER (HEC)

TEST CONDITIONS	TEST DETAILS/RESULTS/ACTIONS
N1 CHECK THE B+ SUPPLY	
1 2 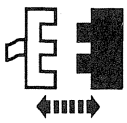 HEC C294 3 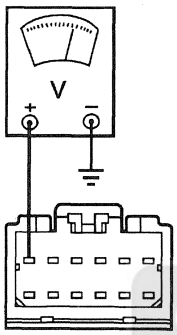 AH0220-B	3 Connect a voltmeter between HEC C294-6, Circuit 973 (R), and ground. • Is the voltage reading B+? → **Yes** GO to **N5**. → **No** GO to **N2**.
N2 CHECK THE FUSE JUNCTION PANEL FUSE 20 (10A)	
1 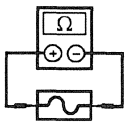 Fuse Junction Panel Fuse 20 (10A)	• Is the fuse OK? → **Yes** REPAIR Circuit 973 (R). RETEST the system. → **No** GO to **N3**.

Official Licensed Product Ford Motor Company

(Continued)

DIAGNOSIS AND TESTING (Continued)

PINPOINT TEST N: NO COMMUNICATION WITH THE MODULE — HYBRID ELECTRONIC CLUSTER (HEC) (Continued)

TEST CONDITIONS	TEST DETAILS/RESULTS/ACTIONS
N3 CHECK CIRCUIT 973 (R) FOR A SHORT	
1 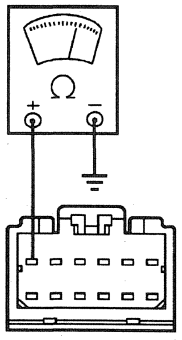 AH0218-B	1 Connect an ohmmeter between HEC C294-6, Circuit 973 (R) and ground. • Is the resistance 10 kohms or less? → **Yes** GO to **N4**. → **No** REPLACE Fuse 20 (10A). RETEST the system. If Fuse 20 (10A) fails again, REPAIR the HEC.
N4 CHECK THE MESSAGE CENTER INDICATOR FOR SHORT	
1 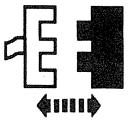 Message Center Indicator Module C208 2 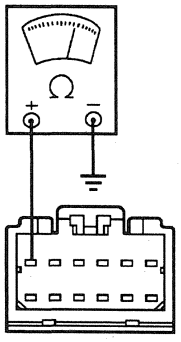 AH0218-B	2 Connect an ohmmeter between HEC C294-6, Circuit 973 (R) and ground. • Is the resistance 10 kohms or less? → **Yes** REPAIR Circuit 973 (R). TEST the system for normal operation. → **No** REPLACE the message center indicator module; refer to Section 413-08. RETEST the system.

Official Licensed Product
Ford Motor Company

(Continued)

DIAGNOSIS AND TESTING (Continued)

PINPOINT TEST N: NO COMMUNICATION WITH THE MODULE — HYBRID ELECTRONIC CLUSTER (HEC) (Continued)

TEST CONDITIONS	TEST DETAILS/RESULTS/ACTIONS
N5 CHECK CIRCUIT 298 (P/O)	
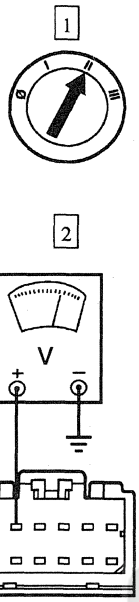 AH0221-B	2 Connect a voltmeter between HEC C294-5, Circuit 298 (P/O), and ground. • Is the voltage reading B+? → **Yes** GO to **N10**. → **No** GO to **N6**.
N6 CHECK FUSE JUNCTION PANEL FUSE 28 (10A)	
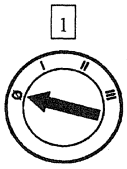 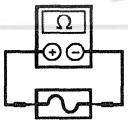 Fuse Junction Panel Fuse 28 (10A)	• Is the fuse OK? → **Yes** REPAIR Circuit 298 (P/O). RETEST the system. → **No** GO to **N7**.

(Continued)

Official Licensed Product Ford Motor Company

DIAGNOSIS AND TESTING (Continued)

PINPOINT TEST N: NO COMMUNICATION WITH THE MODULE — HYBRID ELECTRONIC CLUSTER (HEC) (Continued)

TEST CONDITIONS	TEST DETAILS/RESULTS/ACTIONS
N7 CHECK THE SYSTEM FOR A SHORT	
1 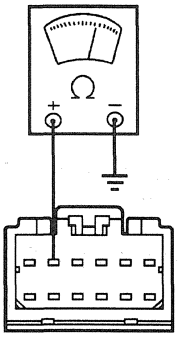 AH0219-B	1 Connect an ohmmeter between HEC C294-5, Circuit 298 (P/O) and ground. • Is the resistance 10 kohms or less? → **Yes** GO to **N8**. → **No** REPLACE Fuse 28 (10A). RETEST the system. If Fuse 28 (10A) opens again, REPAIR the HEC.
N8 CHECK THE INDICATOR LAMP MODULE FOR A SHORT	
1 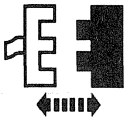 Indicator Lamp Module C238 2 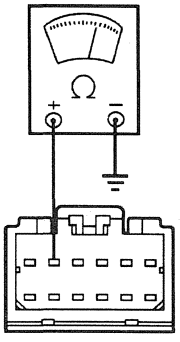 AH0219-B	2 Connect an ohmmeter between HEC C294-5, Circuit 298 (P/O) and ground. • Is the resistance 10 kohms or less? → **Yes** GO to **N9**. → **No** REPLACE the indicator lamp module; REFER to Section 413-08. RETEST the system.

Official Licensed Product
Ford Motor Company

(Continued)

DIAGNOSIS AND TESTING (Continued)

PINPOINT TEST N: NO COMMUNICATION WITH THE MODULE — HYBRID ELECTRONIC CLUSTER (HEC) (Continued)

TEST CONDITIONS	TEST DETAILS/RESULTS/ACTIONS
N9 CHECK THE CENTER CONSOLE TRANSMISSION RANGE INDICATOR FOR A SHORT	
1 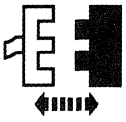 Center Console Transmission Range Indicator C319 2 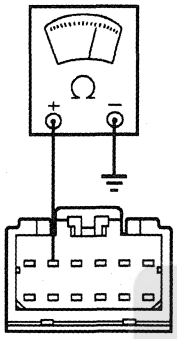 AH0219-B	2 Connect an ohmmeter between HEC C294-5, Circuit 298 (P/O) and ground. • Is the resistance 10 kohms or less? → **Yes** REPAIR Circuit 298 (P/O) for a short to ground. TEST the system for normal operation. → **No** REPLACE the center console transmission range indicator; REFER to Section 307-05. RETEST the system.
N10 CHECK CIRCUIT 875 (BK/LB)	
1 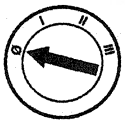 2 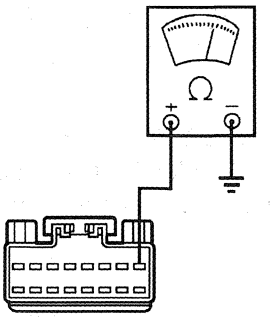 AH0216-B	2 Connect an ohmmeter between HEC C293-13, Circuit 875 (BK/LB) and ground. • Is the resistance 5 ohms or less? → **Yes** GO to **N11**. → **No** REPAIR Circuit 875 (BK/LB). RETEST the system.

(Continued)

Official Licensed Product Ford Motor Company

DIAGNOSIS AND TESTING (Continued)

PINPOINT TEST N: NO COMMUNICATION WITH THE MODULE — HYBRID ELECTRONIC CLUSTER (HEC) (Continued)

TEST CONDITIONS	TEST DETAILS/RESULTS/ACTIONS
N11 CHECK CIRCUIT 57 (BK)	
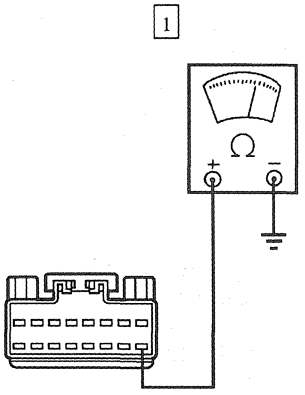 AH0217-B	1 Connect an ohmmeter between HEC C293-21, Circuit 57 (BK) and ground. • Is the resistance 5 ohms or less? → **Yes** REFER to Section 418-00. → **No** REPAIR Circuit 57 (BK). RETEST the system.

REMOVAL AND INSTALLATION

Official Licensed Product
Ford Motor Company

Hydraulic Control Unit — Electronic (EHCU)

Removal

WARNING: BRAKE FLUID CONTAINS POLYGLYCOL ETHERS AND POLYGLYCOLS. AVOID CONTRACT WITH EYES. WASH HANDS THOROUGHLY AFTER HANDLING. IF BRAKE FLUID CONTACTS EYES, FLUSH EYES WITH RUNNING WATER FOR 15 MINUTES. GET MEDICAL ATTENTION IF IRRITATION PERSISTS. IF TAKEN INTERNALLY, DRINK WATER AND INDUCE VOMITING. GET MEDICAL ATTENTION IMMEDIATELY.

CAUTION: Brake fluid is harmful to painted and plastic surfaces. If brake fluid is spilled onto a painted or plastic surface, immediately wash it with water.

1. Remove the LH inner front fender splash shield (16103).

REMOVAL AND INSTALLATION (Continued)

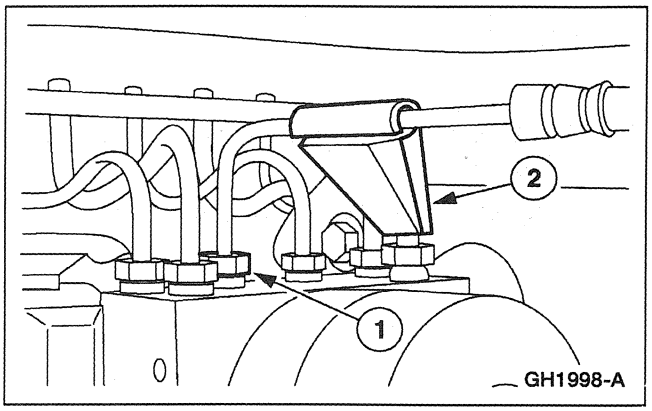

2. Remove the left front caliper brake lines.
   1 Remove the brake line.
   2 Remove the brake line clip.

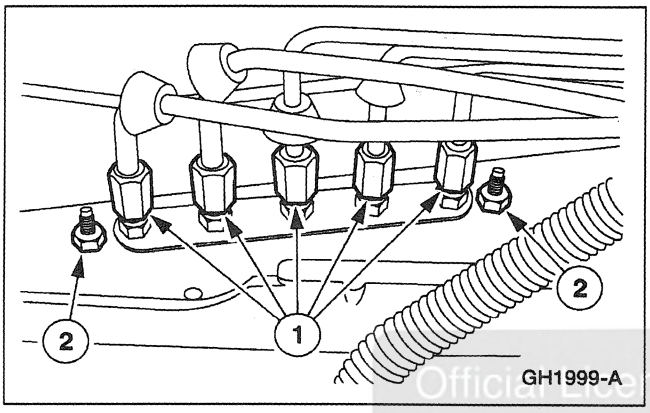

3. Remove the brake lines from the junction block.
   1 Remove the brake lines.
   2 Remove the brake pressure control valve block nuts.

Official Licensed Product

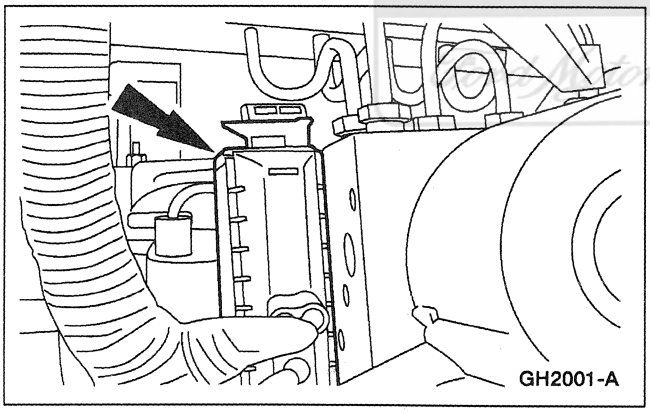

4. Disconnect the electrical connector.

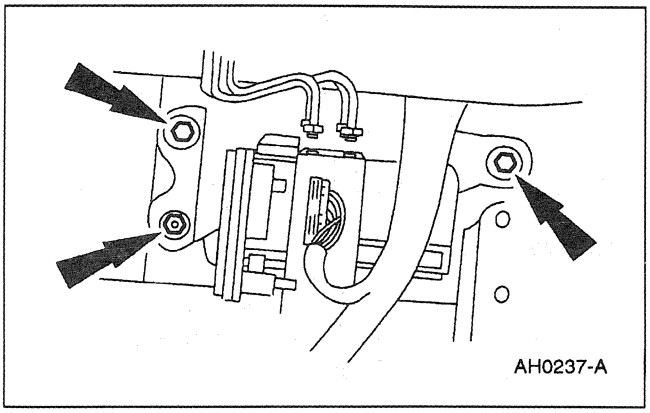

5. Remove the anti-lock brake control module mounting bolts.

REMOVAL AND INSTALLATION (Continued)

Installation

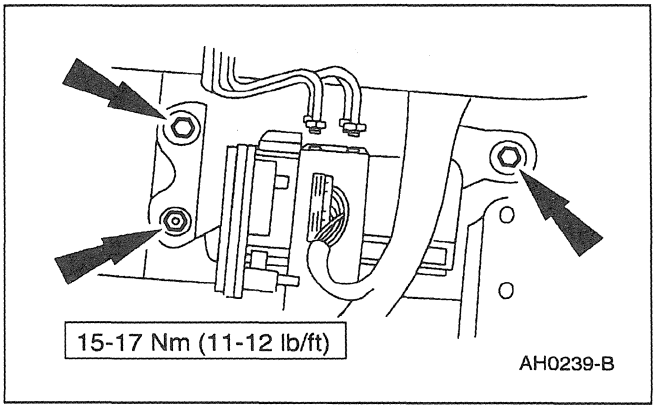

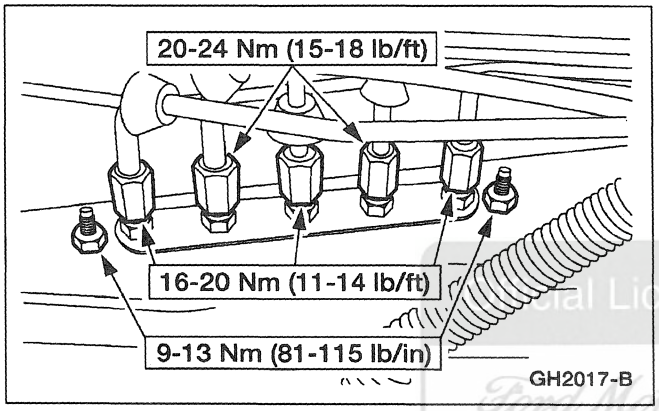

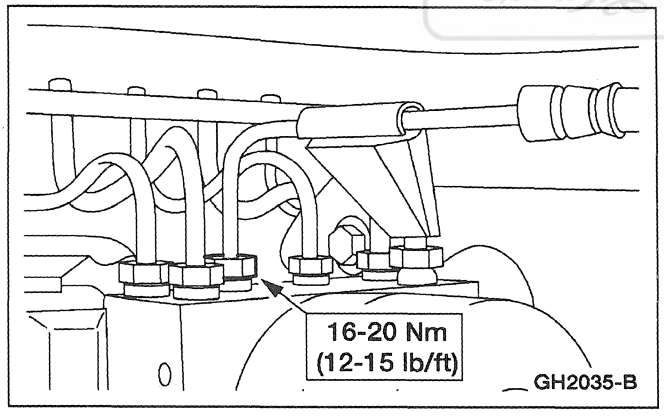

1. **NOTE:** Bleed brake system as necessary; refer to Section 206-00.

   To install, reverse the removal procedure.

Ford Motor Company

Module — Anti-Lock Brake Control

Removal

1. Remove the hydraulic control unit; refer to Hydraulic Control Unit.

REMOVAL AND INSTALLATION (Continued)

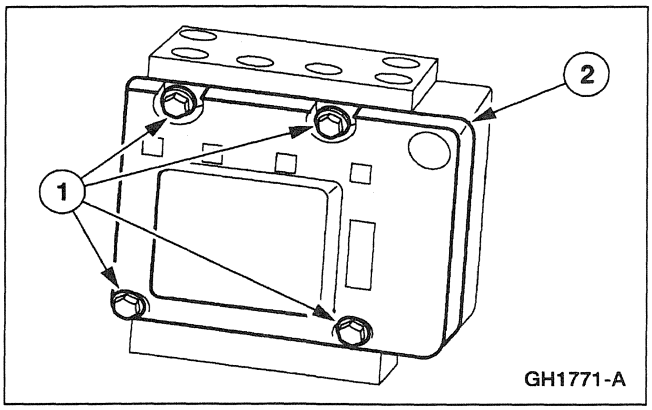

2. Remove the control module.
   1 Remove the control module screws.
   2 Remove the control module.

Installation

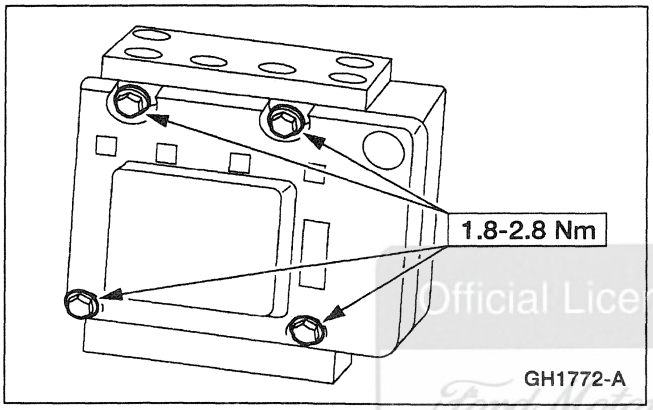

1. To install, reverse the removal procedure.

Official Licensed Product
Ford Motor Company

Sensor — Anti-Lock Brake, Front

Removal

1. Raise and support the vehicle; refer to Section 100-02.

2. Remove the LH wheel and tire; refer to Section 204-04.

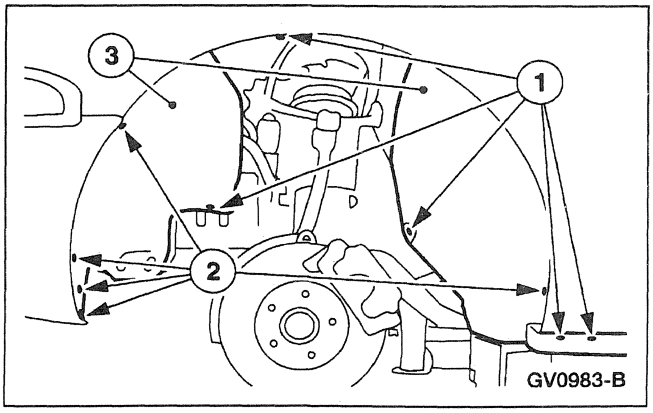

3. Remove the inner splash shield.
   1 Remove the clips.
   2 Remove the screws.
   3 Remove the splash shield.

REMOVAL AND INSTALLATION (Continued)

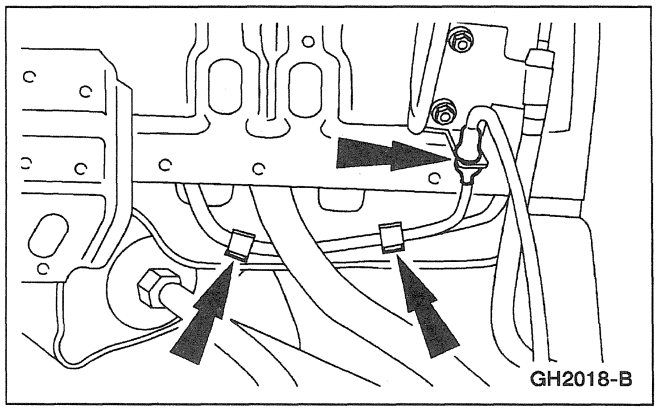

4. Remove the routing clips.

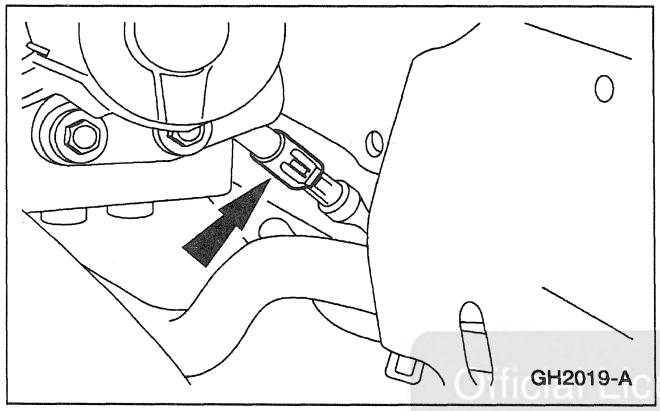

5. Disconnect the front anti-lock brake electrical connector.

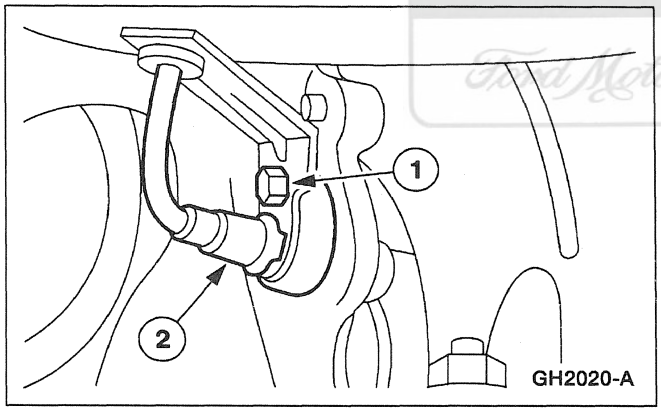

6. Remove the front anti-lock brake sensor.
   1 Remove the bolt.
   2 Remove the sensor.

Official Licensed Product
Ford Motor Company

REMOVAL AND INSTALLATION (Continued)

Installation

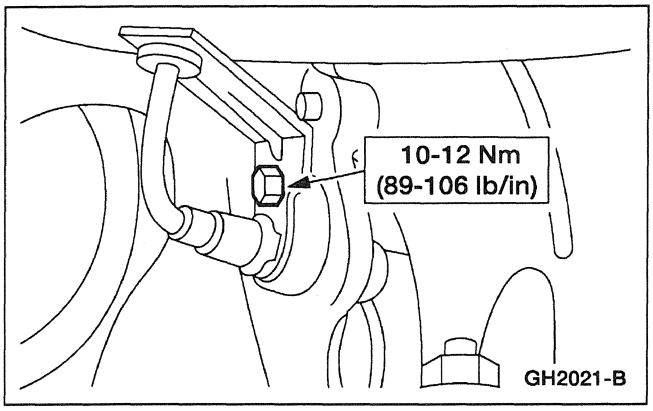

1. To install, reverse the removal procedures.

Sensor — Anti-Lock Brake, Rear

Removal

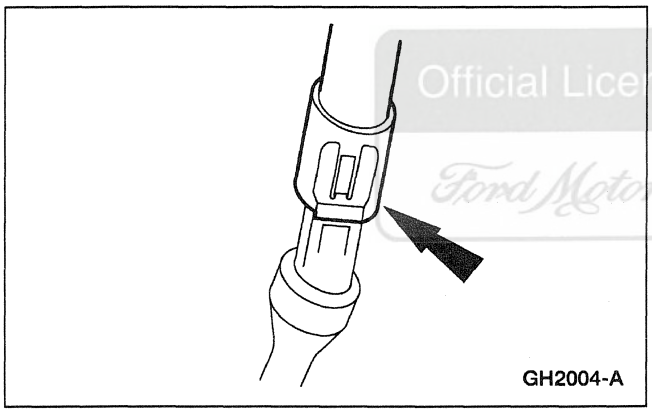

1. Disconnect the rear anti-lock brake sensor electrical connector.
   - Remove luggage compartment front cover.
   - Disconnect the electrical connector.

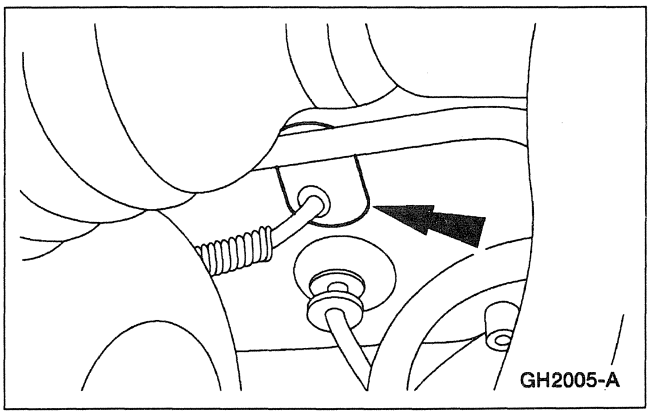

2. Push the sensor harness grommet through the luggage compartment floor.

3. Raise and support the vehicle; refer to Section 100-02.

REMOVAL AND INSTALLATION (Continued)

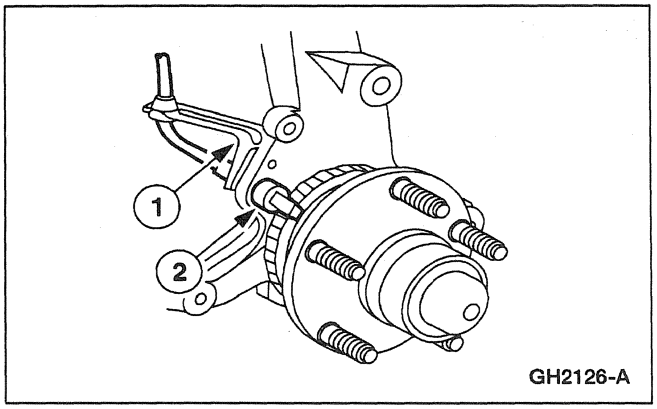

4. **NOTE:** Rotor is removed for clarity.
   Remove the rear anti-lock brake sensor.
   1 Remove the bolt.
   2 Remove the rear anti-lock brake sensor.

Installation

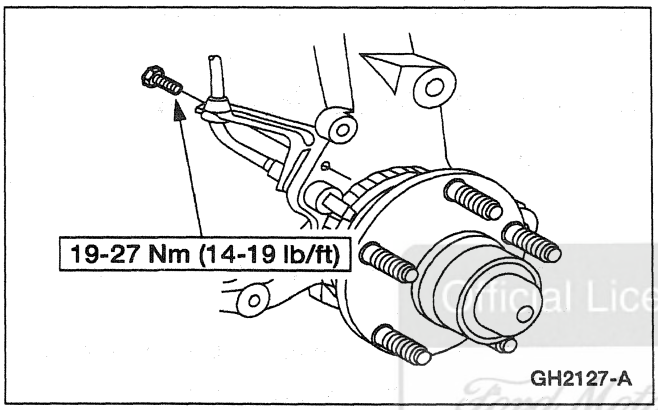

1. To install, reverse the removal procedure.

Official Licensed Product
Ford Motor Company

Sensor Indicator — Front

Removal and Installation

Refer to Section 204-01.

Sensor Indicator — Rear

Removal and Installation

Refer to Section 205-05.

SPECIFICATIONS

General Specifications

Item	Specification
High Performance DOT-3 Motor Vehicle Brake Fluid C6AZ-19542-AB	ESA-M6C25-A DOT-3

SPECIFICATIONS (Continued)

Torque Specifications

Description	Nm	Lb/Ft	Lb/In
Anti-Lock Brake Control Module Mounting Bolts	15-17	11-12	—
Brake Tube Connections to Brake Pressure Control Valve Block			
M10 x 1	16-20	12-15	—
M12 x 1	20-24	15-18	—
M14 x 1.5	26-30	19-22	—
Brake Pressure Control Valve Block Nuts	9-13	—	—

(Continued)

Torque Specifications

Description	Nm	Lb/Ft	Lb/In
Control Module	1.8-2.8	—	—
Front Brake Anti-Lock Sensor	10-12	—	89-106
Lug Nuts	115-142	85-104	—
Rear Brake Anti-Lock Sensor	19-27	14-19	—

Official Licensed Product
Ford Motor Company

SECTION 211-00 Steering — General Information

VEHICLE APPLICATION: Mark VIII

SUBJECT **PAGE**

DESCRIPTION AND OPERATION

Steering 211-00-2
Electronic Variable Orifice (EVO) Power Steering 211-00-3
Power Steering Pump Identification 211-00-3
Steering Gear Model Identification 211-00-3
Steering System 211-00-2

DIAGNOSIS AND TESTING

Steering 211-00-4
Inspection and Verification 211-00-4
Air Suspension/Electronic Variable Orifice (EVO) Control Module Diagnostic Trouble Code (DTC) Index 211-00-6
Auto Test 211-00-5
Drive Cycle Diagnostics 211-00-5
EVO Steering Diagnosis 211-00-5
Functional Tests 211-00-6
Pinpoint Tests 211-00-14
Pump Flow and Pressure Test 211-00-35
Steering Gear Insulator 211-00-36
Steering Gear Valve 211-00-36
Steering Linkage 211-00-35
Symptom Chart 211-00-7
Turning Effort Test 211-00-36

GENERAL PROCEDURES

Final Fill 211-00-43
Purging 211-00-39
System Flushing 211-00-37

SPECIFICATIONS 211-00-44

Official Licensed Product
Ford Motor Company

DESCRIPTION AND OPERATION

Steering

Power Steering Components

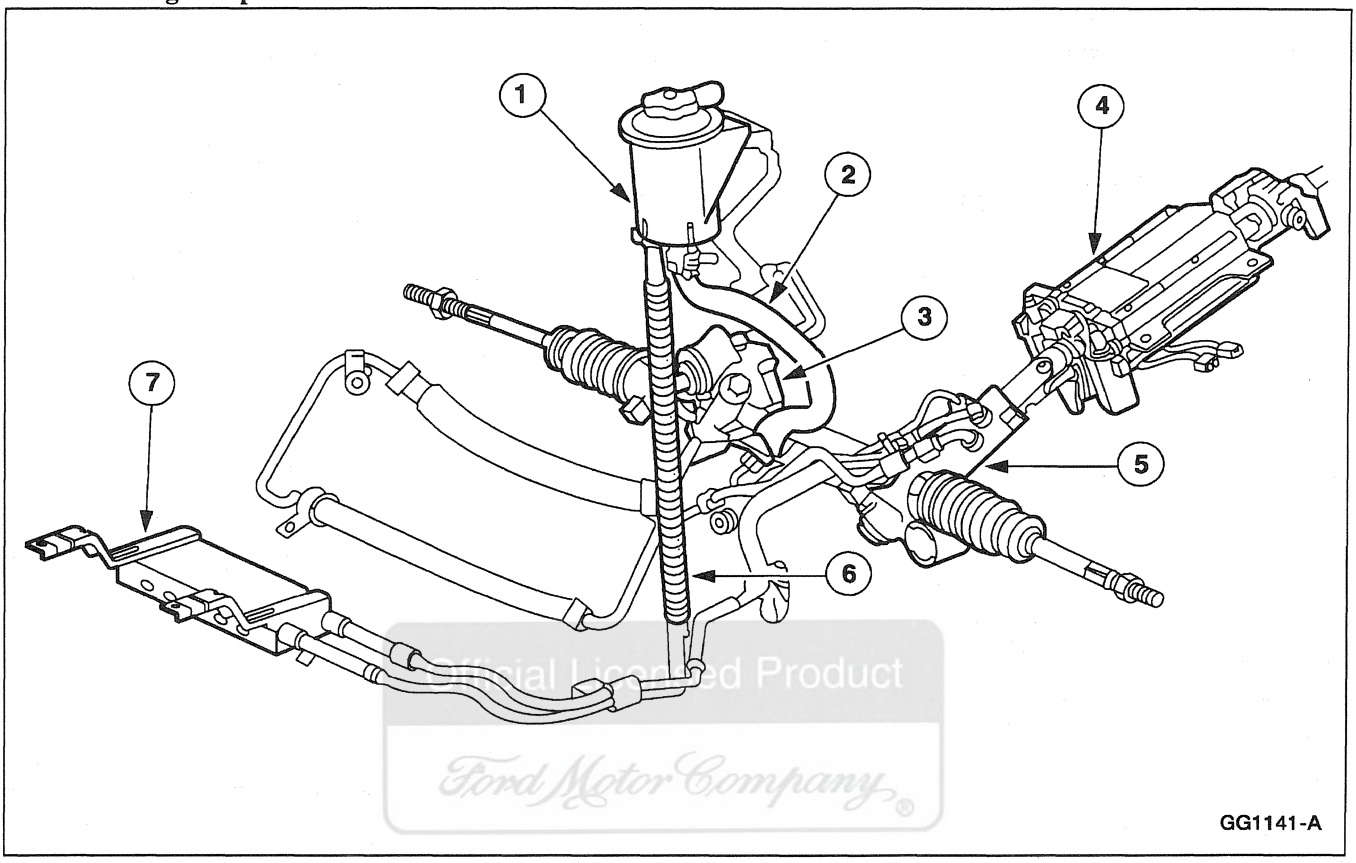

Official Licensed Product
Ford Motor Company

Item	Part Number	Description
1	—	Power Steering Pump Reservoir
2	—	Power Steering Reservoir Pump Hose
3	—	Power Steering Pump

Item	Part Number	Description
4	—	Steering Column
5	—	Power Steering Gear
6	—	Power Steering Return Hose
7	—	Power Steering Fluid Cooler

(Continued)

Steering System

The power steering system uses a CIII type pump and a power rack and pinion steering gear.

- The CIII power steering pump (3A674) is a belt driven, vane-type, power steering pump mounted directly to the engine block with retaining bolts.
- The electronic variable orifice (EVO) power steering control valve actuator (3783) is connected to the pump body to provide variable power assist.
- The electrical connector and casing are able to swivel. This is normal and does not indicate a loose power steering control valve actuator assembly.
- The power steering pump reservoir (3E764) for the power steering fluid is mounted to the LH engine coil bracket at the front of the engine.

For more information on the power steering pump, gear, reservoir, valve, hoses, refer to Section 211-02.

DESCRIPTION AND OPERATION (Continued)

Steering Gear Model Identification

Power rack and pinion steering gear is identified by a service identification stamped into the gear housing at the opposite end of the input shaft.

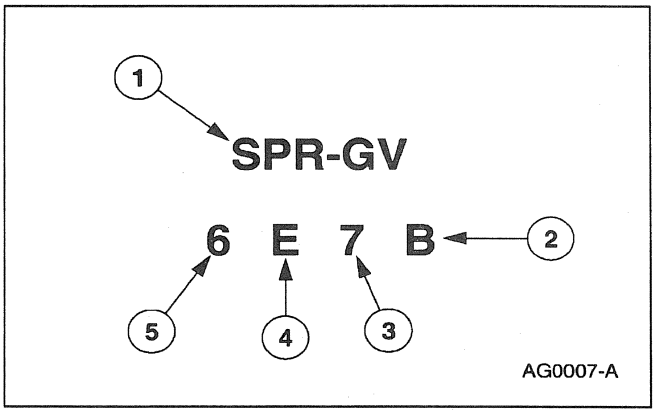

Item	Part Number	Description
1	—	Steering Gear Model Code
2	—	Shift Code
3	—	Day
4	—	Month
5	—	Year

Power Steering Pump Identification

The power steering pump has a service identification tag to identify assemblies for service purposes.

The identification tag is located on power steering pump body (visible from driver side of vehicle), and contains information as shown.

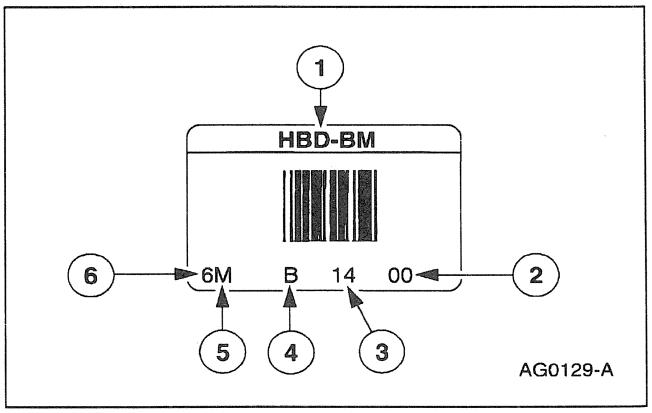

Item	Part Number	Description
1	—	Model Code
2	—	For Manufacturing Purposes Only
3	—	Day of the Month
4	—	Shift
5	—	Month
6	—	Year

Electronic Variable Orifice (EVO) Power Steering

The electronic variable orifice (EVO) steering system controls the level of power steering assistance based on vehicle speed and the rate of change in the steering position. Greater power assistance is provided at lower speeds to lessen steering effort and increase maneuverability. Less power assistance is provided at higher speeds to raise the steering effort for increase directional stability and greater ''road feel.''

Steering effort increases with vehicle speed in a smooth and continuous manner in the mid-range speed, reaching a constant level at high rates of speed. A high rate of change in the steering wheel position, which might indicate an evasive maneuver, will result in an increase in the power assistance.

The EVO communications are integral with the Air Suspension Module; refer to Section 204-05.

Official Licensed Product
Ford Motor Company

DIAGNOSIS AND TESTING

Steering

Refer to Electrical and Vacuum Troubleshooting Manual, Cell 43, Electronically Variable Orifice (EVO) Power Steering for schematic and connector information.

Special Tool(s)

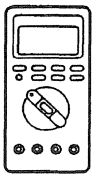 ST1177-A	88 Digital Multimeter or equivalent 105-R0053
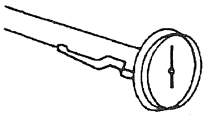 ST1396-A	Dial Thermometer 0-222°F or equivalent 023-R0007
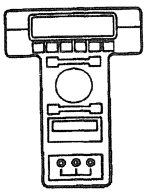 ST1217-A	New Generation Star (NGS) Tester or equivalent 418-F048 (007-00500)
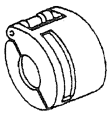 ST1147-A	Power Steering Analyzer or equivalent 211-F001 (014-00207)

Inspection and Verification

1. Verify the customer's concern by operating the steering system while driving to duplicate the condition.
2. Inspect to determine if any of the following mechanical or electrical concerns apply:

Visual Inspection Chart

Mechanical	Electrical
• Tire pressure, loose wheels • Loose tie rod ends, inner ball joints • Loose suspension struts or ball joints • Loose universal joints • Loose connecting bolts on the column intermediate shaft • Loose steering gear assembly • Improper drive belt tension • Binding or misaligned steering column • Power steering pump, fluid level, hose leak or line restrictions	• Open fuses in the fuse junction panel, fuse 28 (10A), power distribution box fuse 4 (15A) • Circuitry and connections • Steering wheel rotation sensor • Vehicle speed sensor • Power steering pump actuator valve • Air suspension/electronic variable orifice (EVO) control module • Air suspension/steering test connector

3. If inspection reveals obvious concern(s) that can be readily identified, repair as required.
4. If the concern remains after the inspection, use New Generation Star (NGS) Tester to retrieve diagnostic trouble codes (DTCs). To retrieve DTCs:
   - Connect NGS Tester to the air suspension/steering test connector on the RH front shock absorber tower.
   - Execute Function Test 211; refer to Functional Tests. Record retrieved DTCs.
   - Run Auto Test; refer to Auto Test Diagnostics to determine which DTCs are currently being detected.

If the stored DTCs are different than current DTCs, repair current DTCs first. If more than one DTC is displayed in stored or current memory, repair in the following order:

1st - Electrical Faults, DTC 25, DTCs 50 through 95.

2nd - Electro-Pneumatic Faults, DTCs 98 and 99.

3rd - Courtesy Lamp Switches, DTC 29; Steering Wheel Rotation Sensor, DTC 45.

Ford Motor Company

DIAGNOSIS AND TESTING (Continued)

5. If no DTCs are retrieved, go to Symptom Chart to continue diagnostics.
6. If DTCs are retrieved, go to Air Suspension/Electronic Variable Orifice (EVO) Control Module Diagnostic Trouble Code (DTC) Index to continue diagnostics.
7. If NGS Tester cannot communicate with the air suspension/EVO module, go to Pinpoint Test C.

Function Test Index

Test Code	Description
211	Display All Diagnostic Trouble Codes In Memory
212	LH Front Pump with Audible Air Suspension Height Sensor Check
213	LH Front Vent with Audible Air Suspension Height Sensor Check
214	RH Front Pump with Audible Air Suspension Height Sensor Check
215	RH Front Vent with Audible Air Suspension Height Sensor Check
216	LH Rear Pump with Audible Air Suspension Height Sensor Check
217	LH Rear Vent with Audible Air Suspension Height Sensor Check
218	RH Rear Pump with Audible Air Suspension Height Sensor Check
219	RH Rear Vent with Audible Air Suspension Height Sensor Check
221	Compressor Run
222	Actuator Output Test (Cycles All Solenoids and EVO Power Steering Control Valve Actuator)
223	LH Front Air Suspension Height Sensor Trim Detection, Audible Output
224	RH Front Air Suspension Height Sensor Trim Detection, Audible Output
225	LH Rear Air Suspension Height Sensor Trim Detection, Audible Output
226	Vehicle Speed Sensor Detection
227	Pulse EVO Power Steering Control Valve Actuator through Duty Cycle
228	Erase All Diagnostic Trouble Codes Stored in Control Module Memory

EVO Steering Diagnosis

Please remember a diagnostic trouble code (DTC) may indicate several faults. The DTCs are to assist in system diagnosis and are not to be considered as definitive.

Always perform the pinpoint tests corresponding to the DTC to determine where the fault lies and to properly repair the fault.

Drive Cycle Diagnostics

This part of the diagnostics will light the CHECK SUSPENSION warning indicator in the message center if a malfunction is detected in the system while driving the vehicle. Up to 32 DTCs will remain stored in memory for up to one hour after the ignition switch is turned to OFF. The air suspension switch in the luggage compartment must remain ON during this time. The DTCs should be written down at this time. If the vehicle has not been driven in over an hour or the air suspension switch has been turned OFF, the vehicle must be driven with the air suspension switch ON to try to duplicate the condition.

Auto Test

1. Open the hood. Locate the air suspension/steering test connector on the RH front shock tower. Install a battery charger to power the vehicle during testing.
2. Open the luggage compartment door.
3. Connect the New Generation Star (NGS) Tester to the air suspension/steering test connector. Select the air suspension auto test for the Mark VIII from the menu.
4. Make sure both the doors are closed.
5. Turn the air suspension switch to OFF then to ON.
6. Turn the ignition switch from OFF to RUN.
7. Press the trigger button to begin the Auto-Test.
8. ⚠ **CAUTION: Do not lean on vehicle or open doors while DTC 10 is displayed. This will introduce false errors into the test results.**

   DTC 10 is displayed while the Auto Test is running. Any faults discovered by the Auto Test will halt the test and the DTCs will be displayed.
9. When DTC 12 is displayed:

   Open the driver door.

   Turn the steering wheel a minimum of 1/4 turn in both directions.

   Exit the vehicle and close the driver door.

   Open then close the passenger door.

   Press trigger to continue the test.

Digital Licensed Product Ford Motor Company

DIAGNOSIS AND TESTING (Continued)

10. Read the displayed DTCs. DTC 11 means the vehicle has passed the Auto Test. Other DTCs retrieved indicate the faults that must be repaired. Refer to the Air Suspension/Electronic Variable Orifice (EVO) Control Module Diagnostic Trouble Code (DTC) Index for the pinpoint test to repair the DTCs.
11. If the vehicle passes the Auto Test, exit diagnostics by turning the ignition switch to OFF and disconnecting the New Generation Star (NGS) Tester.

Functional Tests

1. Open the hood. Locate the air suspension/steering test connector on the RH front shock tower. Install a battery charger to power the vehicle during testing.
2. Open the luggage compartment door. Locate the air suspension switch and make certain the switch is OFF.
3. Connect the New Generation Star (NGS) Tester to the air suspension/steering test connector. Select the functional test from menu.
4. Make sure both the doors are closed.
5. Turn the ignition switch to RUN.
6. Perform Function Test 211 and record the DTCs displayed.
7. Perform Function Test 228 to clear the air suspension/electronic variable orifice (EVO) control module memory.
8. Scroll to the desired functional test DTC. Refer to Function Test Index.
9. Press the trigger button to begin the desired test.
10. Press the trigger button to end the test.
11. Scroll to the next desired function test.

Air Suspension/Electronic Variable Orifice (EVO) Control Module Diagnostic Trouble Code (DTC) Index

Air Suspension/Electronic Variable Orifice (EVO) Control Module Diagnostic Trouble Code (DTC) Index

NOTE: Prior to testing for any of the following DTCs, repair DTC 18 for low battery voltage or DTC 19 for high battery voltage to determine power and ground. If no fault is found, do not replace any parts, but continue with listed DTCs.

DTC	Description	Error Handling	Generated	Validation	Action To Take
10	Auto Test in Progress	—	Auto Test	—	—
11	Auto Test Passed	—	Auto Test	—	—
12	Perform Manual Tests	—	Auto Test	—	—
15	No Faults Stored in Memory	—	Auto Test	—	—
18	Control Module Detects Low Battery Voltage	Disable air suspension and EVO until senses more than 13 volts for 1 second	Auto Test	Less than 11 volts for 1 second continuous	REFER to Section 204-05.
19	Control Module Detects High Battery Voltage	Disable Air Suspension and EVO until senses less than 17.5 volts for 1 second	Auto Test	More than 19 volts for 1 second continuous	REFER to Section 204-05.
20	Control Module Memory Error 2	Disable Air Suspension	Drive Cycle Auto Test	More than 19 volts for 1 second continuous	REFER to Section 204-05.
25	Air Suspension Height Sensor Supply Not 5 Volts	Disable Air Suspension	Drive Cycle Auto Test	—	REFER to Section 204-05.
29	Two Door Cycles Not Detected During Test	—	Auto Test	—	REFER to Section 204-05.
35	EVO Power Steering Control Valve Actuator Concern	Air suspension normal, EVO full assist	Drive Cycle Auto Test	Fault after 1 second continuous	GO to Pinpoint Test A.

(Continued)

DIAGNOSIS AND TESTING (Continued)

Air Suspension/Electronic Variable Orifice (EVO) Control Module Diagnostic Trouble Code (DTC) Index

DTC	Description	Error Handling	Generated	Validation	Action To Take
45	Steering Rotation Not Detected	—	Auto Test	—	GO to Pinpoint Test B.
50	LH Front Air Suspension Height Sensor Signal Out of Range	Disable Air Suspension	Drive Cycle Auto Test	Fault after 1 second continuous	REFER to Section 204-05.
55	RH Front Air Suspension Height Sensor Signal Out of Range	Disable Air Suspension	Drive Cycle Auto Test	Fault after 1 second continuous	REFER to Section 204-05.
60	LH Rear Air Suspension Height Sensor Signal Out of Range	Disable Air Suspension	Drive Cycle Auto Test	Fault after 1 second continuous	REFER to Section 204-05.
70	Vent Solenoid Valve	Disable Air Suspension	Drive Cycle Auto Test	Fault after 1 second continuous	REFER to Section 204-05.
75	Compressor Relay Control Circuit	Disable Air Suspension	Drive Cycle Auto Test	Fault after 1 second continuous	REFER to Section 204-05.
80	LH Front Spring Solenoid Valve Circuit Failure	Disable Air Suspension	Drive Cycle Auto Test	Fault after 1 second continuous	REFER to Section 204-05.
85	RH Front Spring Solenoid Valve Circuit Failure	Disable Air Suspension	Drive Cycle Auto Test	Fault after 1 second continuous	REFER to Section 204-05.
90	LH Rear Spring Solenoid Valve Circuit Failure	Disable Air Suspension	Drive Cycle Auto Test	Fault after 1 second continuous	REFER to Section 204-05.
95	RH Rear Spring Solenoid Valve Circuit Failure	Disable Air Suspension	Drive Cycle Auto Test	Fault after 1 second continuous	REFER to Section 204-05.
98	Compressor Run Time Exceeded	Disable Air Suspension	Drive Cycle Auto Test	Fault after ON-REST-ON cycle. 11.5 minutes	REFER to Section 204-05.
99	Unable to Detect Raising or Lowering of One or More Corners	Disable Air Suspension	Drive Cycle Auto Test	Fault after either max. vent or max. pump time-out (90-second vent, 90-second pump)	REFER to Section 204-05.
—	No Codes Displayed, Auto Test Is Running	—	—	—	REFER to Section 204-05.

Symptom Chart

NOTE: Use 88 Digital Multimeter to perform pinpoint tests.

NOTE: Evaluation should be conducted on a level road (little road crown).

Refer to the Electrical and Vacuum Troubleshooting Manual for connector numbers cited in the pinpoint tests.

DIAGNOSIS AND TESTING (Continued)

Symptom Chart

Condition	Possible Source	Action
• No Communication With the Module — Air Suspension/EVO Module	• Circuitry open/shorted. • Control module.	• GO to Pinpoint Test C.
• Steering Does Not Vary With Vehicle Speed	• Vehicle speed sensor. • Circuitry open/shorted. • Control module.	• GO to Pinpoint Test D.
• Wander — the Vehicle Wanders Side-To-Side on the Roadway When it is Driven Straight Ahead While the Steering Wheel is Held in a Firm Position	• Check the tire size and pressure.	• Be sure the tire sizes are correct and ADJUST the tire pressures. REFER to Section 204-04.
	• Improper wheel alignment.	• ADJUST as required. REFER to Section 204-01.
	• Check if the vehicle is unevenly loaded or overloaded.	• ADJUST the load.
	• Loose/worn front wheel spindle tie rods or ball socket.	• REPLACE the front wheel spindle tie rod or the tie rod assembly as necessary.
	• The steering gear mounting insulators and/or the retaining bolts are loose or damaged.	• REPLACE the bolts. REFER to Section 211-02.
	• Loose front suspension lower arm struts or ball joint(s).	• REPLACE the arm and ball joint assembly. REFER to Section 204-01.
	• Loose steering column gear input shaft coupling connecting bolts.	• TIGHTEN the bolts at the power rack and pinion steering gear and at the steering column. REFER to Section 211-04 .
	• The steering column gear input shaft coupling joints are loose/worn.	• REPLACE the steering column intermediate shaft coupling assembly. REFER to Section 211-04.

Official Licensed Product
Ford Motor Company

DIAGNOSIS AND TESTING (Continued)

Symptom Chart (Continued)

Condition	Possible Source	Action
• Pulls to One Side — the Vehicle Tends to Pull to One Side When Driven on a Level Surface	• Improper tire pressure.	• ADJUST the tire pressure.
	• Improper tire size or different type.	• REPLACE as required. REFER to Section 204-04.
	• The vehicle is unevenly or excessively loaded.	• ADJUST the load.
	• Improper wheel alignment.	• ADJUST as required. REFER to Section 204-01.
	• Damaged front suspension components.	• REFER to Section 204-01.
	• Damaged rear suspension components.	• REFER to Section 204-02.
	• The steering gear valve effort out of balance.	• PLACE transmission in NEUTRAL while driving and TURN engine off (coasting). If vehicle does not pull with the engine off, REPLACE the power steering short rack assembly. REFER to Section 211-02. — If vehicle does drift with engine off, CROSS-SWITCH front tire/wheel assemblies. — If vehicle pulls to opposite side, CROSS-SWITCH tire/wheel assemblies that were on the rear to same side on the front. — If vehicle pull direction is not changed, CHECK front suspension components and wheel alignment. REFER to Section 204-00.
	• Check the front and rear brakes for proper operation.	• ADJUST if necessary. REFER to Section 206-00.
	• Check for damaged air spring in the front and/or the rear suspension.	• REPLACE if necessary. REFER to Section 204-05.
	• Check the rear suspension for loose/worn rear shock absorber struts, rear suspension arm and bushing retaining fasteners.	• TIGHTEN all retaining fasteners. REFER to Section 204-02.

Official Licensed Product
Ford Motor Company

DIAGNOSIS AND TESTING (Continued)

Symptom Chart (Continued)

Condition	Possible Source	Action
• Feedback (Rattle, Chuckle, Knocking Noises in Power Rack and Pinion Steering Gear — Roughness is Felt in the Steering Wheel By the Driver When the Vehicle is Driven Over Rough Pavement	• Steering column intermediate shaft coupling loose/worn.	• REPLACE steering column intermediate shaft coupling assembly. REFER to Section 211-04.
	• Loose front wheel spindle tie rods and/or tie rod inner ball joints.	• REPLACE front wheel spindle tie rods.
	• Steering gear mounting insulators and/or retaining bolts loose or damaged.	• REPLACE retaining bolts. REFER to Section 211-02.
	• Steering column gear input shaft coupling connecting bolts loose.	• TIGHTEN bolts at power rack and pinion steering gear to flex coupling and flex coupling to intermediate shaft. REFER to Section 211-02 and Section 211-04.
	• Loose suspension bushings/fasteners or ball joints.	• TIGHTEN suspension fasteners, REPLACE worn bushings, or REPLACE ball joints. REFER to Section 204-01.
	• Check steering column conditions.	• REFER to Section 211-04.
• Poor Returnability, Sticky Feel — Condition Noticed When the Steering Fails to Return to Center Following a Turn Without Manual Effort From the Driver. In Addition, When the Driver Returns the Steering Wheel to Center, it May Have a Sticky or Catchy Feel	• Improper tire pressure.	• ADJUST tire pressures.
	• Improper tire size or different type.	• REPLACE as required. REFER to Section 204-04.
	• Misaligned steering column or column flange rubbing steering wheel and/or flange.	• ALIGN steering column. REFER to Section 211-04.
	• Steering column gear input shaft universal joints binding.	• REPLACE steering column intermediate shaft coupling assembly. REFER to Section 211-04.
	• Check for steering column boot tears and/or evidence of binding or damage to front wheel spindle tie rods or ball joints.	• REPLACE as necessary. REFER to Section 211-04.
	• Damaged/worn front suspension components.	• INSPECT control arm ball joints. REFER to Section 204-01 for replacement.
	• Improper wheel alignment.	• ADJUST toe as required. REFER to Section 204-00.
	• Column bearing binding.	• REPLACE steering column bearing. REFER to Section 211-04.
	• Contamination in system.	• FLUSH power steering system.

Ford Motor Company

DIAGNOSIS AND TESTING (Continued)

Symptom Chart (Continued)

Condition	Possible Source	Action
• Light Steering Efforts at All Vehicle Speeds	• Speed sensor. • Circuitry. • Steering wheel rotation sensor.	• Retrieve DTCs; REFER to Inspection and Verification. REPAIR as required.
• Excessive Steering Effort While Making Quick Maneuvers at High Speed	• Speed sensor. • Circuitry. • Steering wheel rotation sensor.	• Retrieve DTCs; REFER to Inspection and Verification. REPAIR as required.
• Heavy Steering Efforts, Poor Assist or Loss of Assist — Condition Recognized by the Driver While Turning Corners and During Parking Maneuvers	• Low power steering pump fluid. • Power rack and pinion steering gear assembly external or internal leak. • Power steering pump external leak. • Improper drive belt tension. • Hose or cooler external leak. • Improper engine idle speed. • Power steering pump pulley loose or warped. • Power steering pump flow/pressure not to specifications. • Hose or cooler line restricted. • Check steering gear adjustments. • System contaminated.	• FILL as required and CHECK for system leaks. • REFER to Section 211-02. • REPLACE power steering pump. REFER to Section 211-02. • CHECK drive belt tensioner. REFER to Section 303-05. • REPAIR/REPLACE as necessary. REFER to Section 211-02. • REFER to Powertrain Control/Emissions Diagnosis Manual [1]. • REPLACE power steering pump pulley. REFER to Section 211-02. • REFER to Section 211-02. • CLEAN or REPLACE as necessary. • REFER to Section 211-02. • INSPECT system for foreign objects, kinked hose, etc. — FLUSH system. — REFER to Section 211-02.
• Fluid Leakage	• Overfilled system. • Component leak.	• CORRECT fluid level as required. • PERFORM external leakage check.
• Drive Belt Squeal	• Check drive belt for proper tension or glazing.	• CHECK automatic tensioner or REPLACE drive belt as required. REFER to Section 303-05.
• Power Steering Pump Noisy	• Low fluid level and possible leak. • Damaged power steering pump.	• REFILL to specified level. PURGE air from system. CHECK for leaks. REPAIR as required.

Official Licensed Product
Ford Motor Company

1 Can be purchased as a separate item.

DIAGNOSIS AND TESTING (Continued)

Symptom Chart (Continued)

Condition	Possible Source	Action
• Swish Type Noise	• Fluid flow into the bypass valve of the pump valve housing with fluid temperature below 54° C (130° F).	• Normal noise.
• Whine Type Noise	• Aerated fluid, vacuum leak in system.	• PURGE system of air.
• Clicking Type Noise	• Excessive power steering pump wear.	• REPLACE power steering pump. REFER to Section 211-02.
• Power Steering Pump/Remote Reservoir Leaks	• Excessive fluid fill. • Loose or damaged hose fittings. • Leak at shaft seal: — Seal damage. — Rotor shaft damage, such as helical grooving or the OD has an axial scratch. — Shaft bushing worn. • Damaged or missing outlet fitting O-rings. • Loose outlet fitting. • Outlet fitting, damaged. • Remote reservoir cracked/damaged.	• ADJUST fluid to proper level. • REPAIR or REPLACE. • REPLACE power steering pump. REFER to Section 211-02. • REPLACE O-rings. • TIGHTEN as required. • REPLACE outlet fitting. • REPLACE remote reservoir.
• Power Steering Pump Leaks, EVO Power Steering Control Valve Actuator	• Damaged EVO actuator O-rings. • Damaged EVO actuator electrical connector. • Damaged EVO power steering control valve actuator.	• REPLACE power steering control valve actuator. REFER to Section 211-02. • REPLACE power steering control valve actuator. REFER to Section 211-02. • REPLACE power steering control valve actuator. REFER to Section 211-02.
• Drive Belt Squeal (Particularly at Full Steering Wheel Travel and Stand Still Parking)	• Loose drive belt.	• CHECK automatic tensioner. REFER to Section 303-05.
• Chirp Noise in Power Steering Pump	• Loose or worn drive belt.	• CHECK automatic tensioner or REPLACE drive belt. REFER to Section 303-05.
• Swish Type Noise	• A noise created by the flow of excessive fluid into the bypass port of the pump valve housing (with temperature below 54° C (130° F). The shearing effect of the cooler (heavier) oil is not detrimental to power steering pump operation.	• A normal condition. Noise will diminish with fluid temperature increase.
• Power Steering Pump — No or Poor Assist	• Contamination can be caused by foreign objects in the power steering oil reservoir or power steering pump, or metallic particles being generated by cam pack discrepancies.	• System must be flushed thoroughly when installing a repaired or new power steering pump.

Official Published Product Ford Motor Company

DIAGNOSIS AND TESTING (Continued)

Symptom Chart (Continued)

Condition	Possible Source	Action
• Moan or Whine Type Noise	• Fluid aeration.	• PURGE the power steering system to reduce aeration noise.
	• Power steering pump loose.	• TIGHTEN as required.
	• Low fluid.	• CHECK fluid level.
	• Hose grounded.	• CHECK for hose being grounded.
	• Steering column grounded.	• CHECK steering column alignment. REFER to Section 211-04.
	• Damaged internal components.	• REPLACE power steering pump. REFER to Section 211-02.
• Steering Gear Hiss	• Check steering column intermediate shaft coupling and steering gear for alignment and binding.	• ADJUST steering column and/or steering column intermediate shaft coupling. REFER to Section 211-04.
	• Check for grounded or loose-boot at dash panel.	• ALIGN boot or TIGHTEN fasteners as required. REFER to Section 211-04.
	• Input shaft and valve assembly.	• REPLACE only if noise is extremely objectionable. REFER to Section 211-02.
• Noise/Rattle (Steering Column)	• Loose bolts/attaching brackets.	• TIGHTEN. REFER to Section 211-04.
	• Looseness of ball bearings or insufficient lube.	• LUBE or REPLACE bearings. REFER to Section 211-04.
	• Steering shaft insulators cracked or dry.	• REPLACE or LUBE insulators as required. REFER to Section 211-04.
	• Flex coupling compressed or extended.	• REPOSITION shaft assembly to flatten flex coupling. REFER to Section 211-04.
• Noise/Squeak or Cracks (Steering Column)	• Dry bushings.	• LUBE shaft seal and shift tube seal. REFER to Section 211-04.
	• Loose or mispositioned shrouds.	• TIGHTEN or REPOSITION shrouds as required. REFER to Section 211-04.
	• Steering wheel rubbing against shrouds.	• REPLACE shroud(s) or steering wheel or REPOSITION shrouds as required. REFER to Section 211-04.
	• Dry shift lever grommets.	• LUBE grommets. REFER to Section 211-04.
	• Insufficient lube on speed control slip ring.	• LUBE slip ring. REFER to Section 211-04.
	• Upper or lower bearing sleeve out of position.	• REPOSITION bearing sleeve. REFER to Section 211-04.
• Other Causes of Noise	• Improper assembly or failure of pump rotating group.	• REPLACE power steering pump as required. REFER to Section 211-02.
	• Imperfections on inside diameter.	• REPLACE power steering pump. REFER to Section 211-02.

Official Licensed Product

DIAGNOSIS AND TESTING (Continued)

Pinpoint Tests

PINPOINT TEST A: DTC 35 — EVO POWER STEERING CONTROL VALVE ACTUATOR CONCERN

TEST CONDITIONS	TEST DETAILS/RESULTS/ACTIONS
A1 CHECK EVO POWER STEERING CONTROL VALVE ACTUATOR	
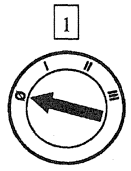 EVO Actuator C132 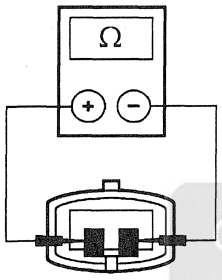 GG1148-A	3 Measure the resistance between EVO actuator terminals C132, circuit 353 (LB) and circuit 330 (Y/LG). • Is the resistance between 8 and 16 ohms? → **Yes** GO to **A2.** → **No** REPLACE the EVO power steering control valve actuator. REPEAT the Auto Test.
A2 CHECK THE HARNESS FOR SHORT TO POWER	
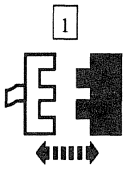 EVO Control Module C205 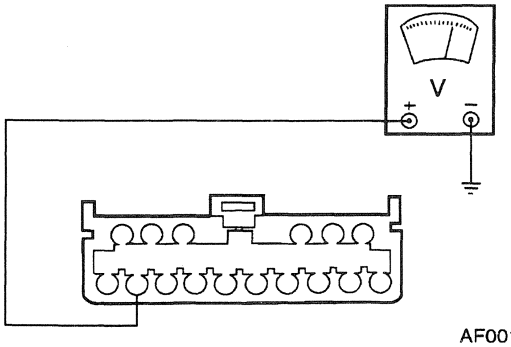 AF0012-B	3 Measure the voltage between air suspension/electronic variable orifice (EVO) control module C205-19, circuit 330 (Y/LG), and ground.

(Continued)

Official Licensed Product Ford Motor Company

DIAGNOSIS AND TESTING (Continued)

PINPOINT TEST A: DTC 35 — EVO POWER STEERING CONTROL VALVE ACTUATOR CONCERN (Continued)

TEST CONDITIONS	TEST DETAILS/RESULTS/ACTIONS
A2 CHECK THE HARNESS FOR SHORT TO POWER (Continued)	
4 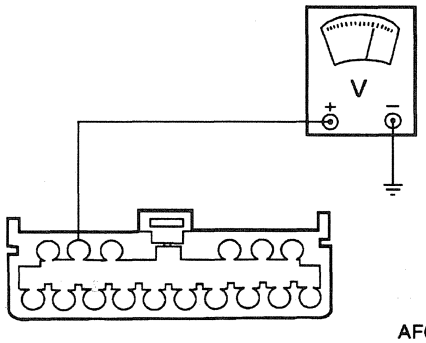 AF0013-B	4 Measure the voltage between EVO control module C205-31, circuit 353 (LB), and ground. • Is any voltage present? → **Yes** REPAIR circuit 353 (LB) or circuit 330 (Y/LG). REPEAT the Auto Test. → **No** GO to **A3**.
A3 CHECK THE HARNESS FOR SHORT TO GROUND	
1 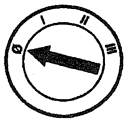 2 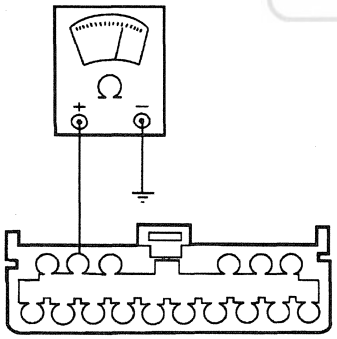 AF0014-B	2 Measure the resistance between EVO control module C205-31, circuit 353 (LB) and ground.

Official Licensed Product
Ford Motor Co.

(Continued)

DIAGNOSIS AND TESTING (Continued)

PINPOINT TEST A: DTC 35 — EVO POWER STEERING CONTROL VALVE ACTUATOR CONCERN (Continued)

TEST CONDITIONS	TEST DETAILS/RESULTS/ACTIONS
A3 CHECK THE HARNESS FOR SHORT TO GROUND (Continued)	
3 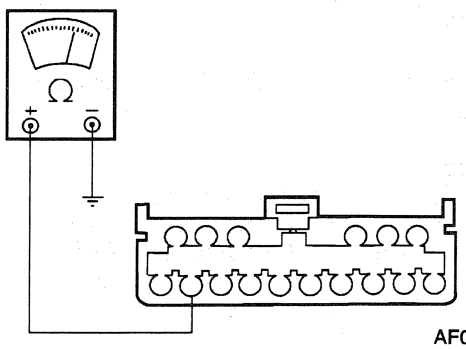 AF0015-B	3 Measure the resistance between EVO control module C205-19, circuit 330 (Y/LG) and ground. • Is the resistance greater than 10,000 ohms on either circuit? → **Yes** GO to **A4**. → **No** REPAIR circuit 353 (LB) or circuit 330 (Y/LG). REPEAT the Auto Test.
A4 CHECK FOR SHORT BETWEEN CIRCUITS 353 (LB) AND 330 (Y/LG)	
1 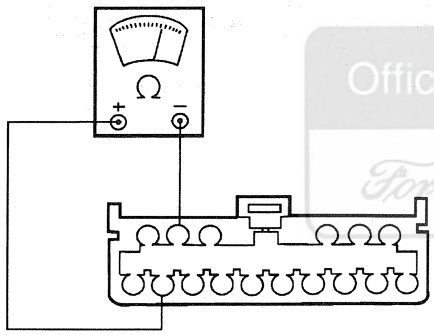 AF0016-B	1 Measure the resistance between EVO control module C205-19, circuit 330 (Y/LG), and circuit C205-31, circuit 353 (LB). • Is the resistance greater than 10,000 ohms? → **Yes** GO to **A5**. → **No** REPAIR circuit 353 (LB) and circuit 330 (Y/LG). REPEAT the Auto Test.
A5 CHECK CIRCUIT 353 (LB) AND CIRCUIT 330 (Y/LG) FOR OPEN	
1 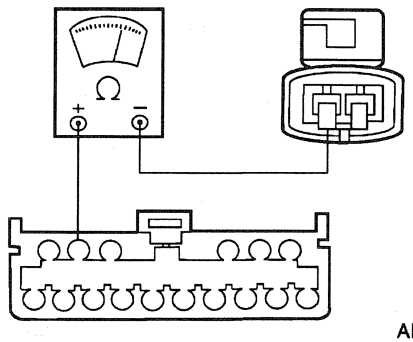 AF0017-B	1 Measure the resistance between EVO control module C205-31 and the EVO actuator C132, circuit 353 (LB).

(Continued)

Official Licensed Product
Ford Motor Company

DIAGNOSIS AND TESTING (Continued)

PINPOINT TEST A: DTC 35 — EVO POWER STEERING CONTROL VALVE ACTUATOR CONCERN (Continued)

TEST CONDITIONS	TEST DETAILS/RESULTS/ACTIONS
A5 CHECK CIRCUIT 353 (LB) AND CIRCUIT 330 (Y/LG) FOR OPEN (Continued)	
2 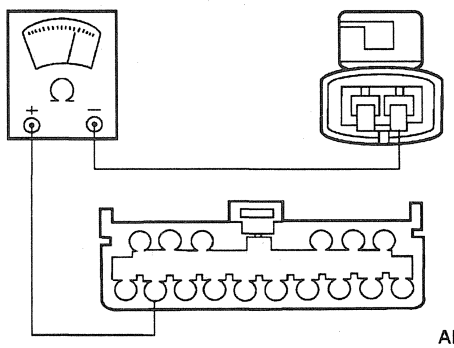 AF0018-B	2 Measure the resistance between EVO control module C205-19 and the EVO actuator C132, circuit 330 (Y/LG). • Is the resistance less than 5 ohms on each circuit? → **Yes** INSPECT the connector pins. CLEAN/REPAIR as required. REPEAT the Auto Test. If DTC 35 repeats, REPLACE the air suspension/electronic variable orifice (EVO) control module. → **No** REPAIR circuit 353 (LB) or 330 (Y/LG). REPEAT the Auto Test.

PINPOINT TEST B: DTC 45 — STEERING ROTATION NOT DETECTED

TEST CONDITIONS	TEST DETAILS/RESULTS/ACTIONS
B1 CHECK FOR POWER AND GROUND AT STEERING WHEEL ROTATION	
1 2 3 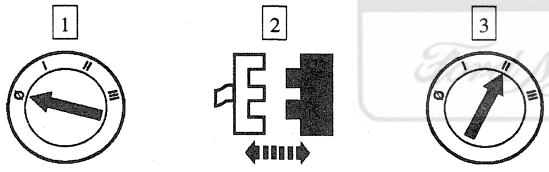 Steering Wheel Rotation Sensor C237 4 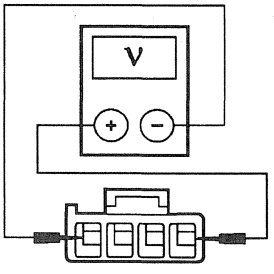 GG1149-A	4 Measure the voltage between steering wheel rotation sensor C237-4, circuit 298 (P/O) and C237-1, circuit 938 (BK/LG). • Is the voltage greater than 10 volts? → **Yes** GO to **B3**. → **No** GO to **B2**.

(Continued)

DIAGNOSIS AND TESTING (Continued)

PINPOINT TEST B: DTC 45 — STEERING ROTATION NOT DETECTED (Continued)

TEST CONDITIONS	TEST DETAILS/RESULTS/ACTIONS
B2 CHECK FOR GROUND	
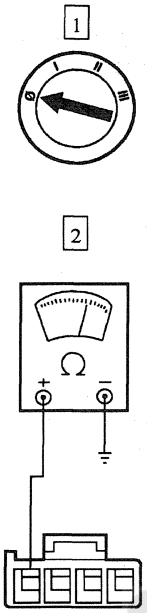 AF0020-A	2 Measure the resistance between steering wheel rotation sensor C237-1, circuit 938 (BK/LG), and ground. • Is the resistance less than 5 ohms? → **Yes** REPAIR circuit 298 (P/O). REPEAT the Auto Test. → **No** REPAIR circuit 938 (BK/LG). REPEAT the Auto Test.
B3 CHECK CIRCUITS 633 (R) AND 634 (BR) FOR CHANGING VOLTAGE AT CONTROL MODULE	
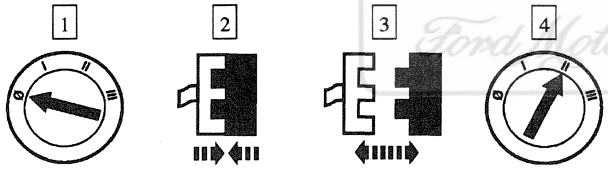 Steering Wheel Rotation Sensor C237 EVO Control Module C204 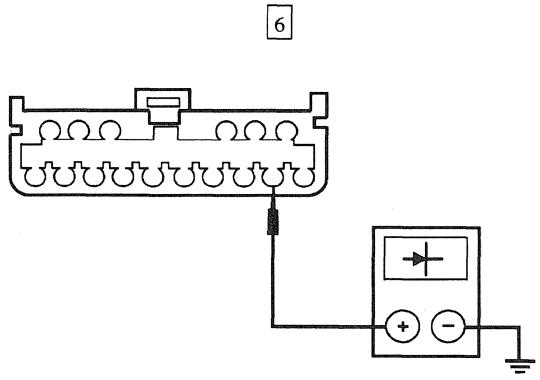 GG1180-A	5 Place the Digital Multimeter in the diode check position. 6 **NOTE:** Touch the Digital Multimeter leads together to be sure the audio (beep) function is operational. **NOTE:** The Digital Multimeter should beep several times while rotating the steering wheel. Connect the Digital Multimeter leads between air suspension control module C204-2, circuit 633 (R), and ground, and listen for an audible beep while slowly turning the steering wheel one quarter turn in each direction.

(Continued)

DIAGNOSIS AND TESTING (Continued)

PINPOINT TEST B: DTC 45 — STEERING ROTATION NOT DETECTED (Continued)

TEST CONDITIONS	TEST DETAILS/RESULTS/ACTIONS
B3 CHECK CIRCUITS 633 (R) AND 634 (BR) FOR CHANGING VOLTAGE AT CONTROL MODULE (Continued)	
7 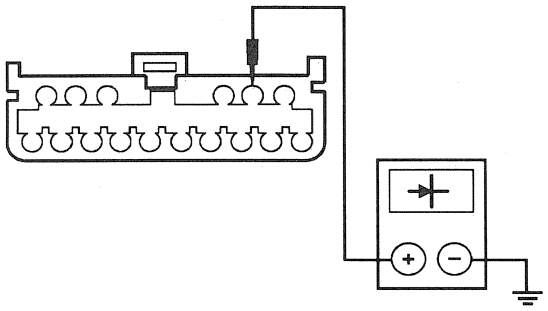 GG1181-A	7 **NOTE:** The Digital Multimeter should beep several times while rotating the steering wheel. Connect the Digital Multimeter leads between air suspension control module C204-22, circuit 634 (BR), and ground, and listen for an audible beep while slowly turning the steering wheel one quarter turn in each direction. • Does the Digital Multimeter beep multiple times in both directions, on both circuits? → **Yes** REPLACE the air suspension/electronic variable orifice (EVO) control module. REPEAT the Auto test. → **No** GO to **B4**.
B4 CHECK CIRCUIT 633 (R) AND CIRCUIT 634 (BR) FOR SHORT TO POWER	
1 2 3 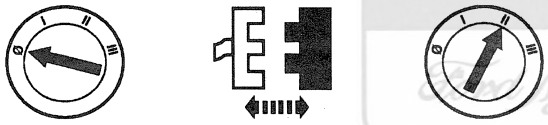 Steering Wheel Rotation Sensor C237 4 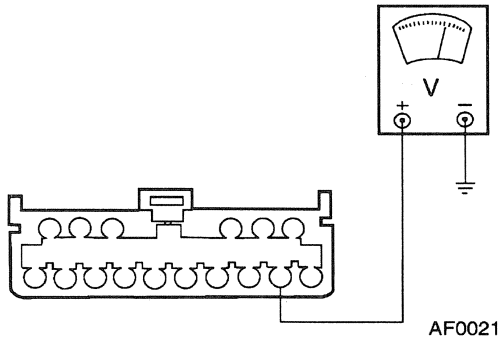 AF0021-B	4 Measure the voltage between EVO control module C204-2, circuit 633 (R), and ground.

(Continued)

Official Licensed Product Ford Motor Company

DIAGNOSIS AND TESTING (Continued)

PINPOINT TEST B: DTC 45 — STEERING ROTATION NOT DETECTED (Continued)

TEST CONDITIONS	TEST DETAILS/RESULTS/ACTIONS
B4 CHECK CIRCUIT 633 (R) AND CIRCUIT 634 (BR) FOR SHORT TO POWER (Continued)	
5 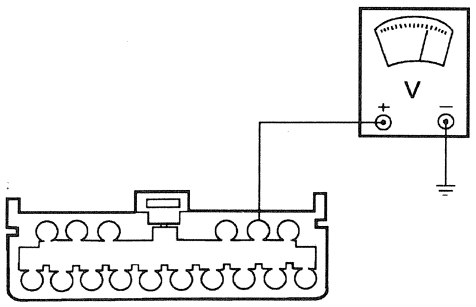 AF0022-B	5 Measure the voltage between EVO control module C204-22, circuit 634 (BR), and ground. • Is any voltage present? → **Yes** REPAIR circuit 634 (BR) or circuit 633 (R). REPEAT the Auto Test. → **No** GO to **B5**.
B5 CHECK CIRCUIT 633 (R) AND CIRCUIT 634 (BR)	
1 2 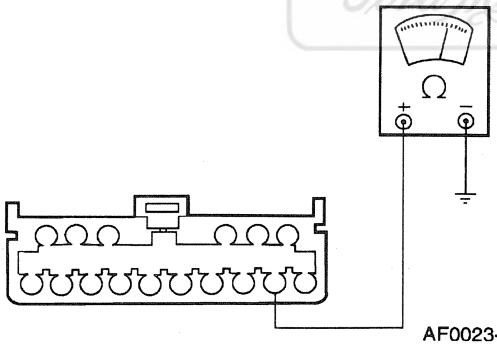 AF0023-B	2 Measure the resistance between EVO control module C204-2, circuit 633 (R) and ground.

Official Licensed Product
Ford Motor Company®

(Continued)

DIAGNOSIS AND TESTING (Continued)

PINPOINT TEST B: DTC 45 — STEERING ROTATION NOT DETECTED (Continued)

TEST CONDITIONS	TEST DETAILS/RESULTS/ACTIONS
B5 CHECK CIRCUIT 633 (R) AND CIRCUIT 634 (BR) (Continued)	
3 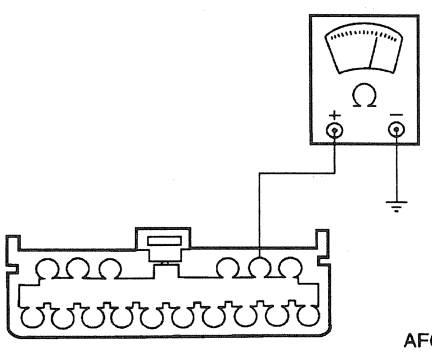 AF0024-B	3 Measure the resistance between EVO control module C204-22, circuit 634 (BR) and ground. • Is the resistance less than 10,000 ohms? → **Yes** REPAIR circuit 633 (R) or circuit 634 (BR). REPEAT the Auto Test. → **No** GO to **B6**.
B6 CHECK CIRCUIT 633 (R) AND CIRCUIT 634 (BR) FOR OPEN	
1 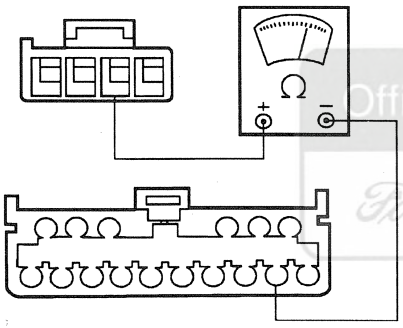 AF0025-B	1 Measure the resistance between EVO control module C204-2 and steering wheel rotation sensor C237-3, circuit 633 (R).
2 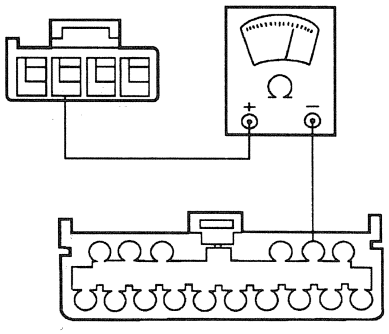 AF0126-B	2 Measure the resistance between EVO control module C204-22, circuit 634 (BR), and steering wheel rotation sensor C237-2, circuit 634 (BR). • Is the resistance less than 5 ohms on each circuit? → **Yes** GO to **B7**. → **No** REPAIR circuit 633 (R) or circuit 634 (BR). REPEAT the Auto Test.

Official Licensed Product
Ford Motor Company

(Continued)

DIAGNOSIS AND TESTING (Continued)

PINPOINT TEST B: DTC 45 — STEERING ROTATION NOT DETECTED (Continued)

TEST CONDITIONS	TEST DETAILS/RESULTS/ACTIONS
B7 CHECK FOR SHORT BETWEEN CIRCUIT 633 (R) AND CIRCUIT 364 (BR)	
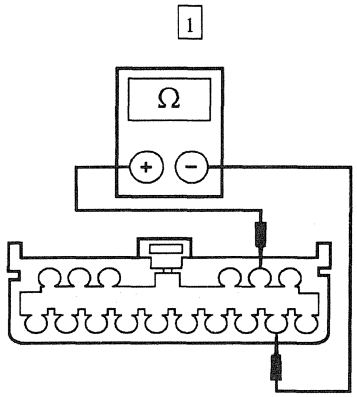 GG1150-A	1 Measure the resistance between EVO control module C204-2, circuit 633 (R), and C204-22, circuit 634 (BR). • Is the resistance greater than 10,000 ohms? → **Yes** REPLACE the steering wheel rotation sensor. REPEAT the Auto Test. → **No** REPAIR circuit 633 (R) or circuit 634 (BR). REPEAT the Auto Test.

PINPOINT TEST C: NO COMMUNICATION WITH THE MODULE — AIR SUSPENSION/EVO MODULE

TEST CONDITIONS	TEST DETAILS/RESULTS/ACTIONS
C1 PERFORM AUTO TEST	
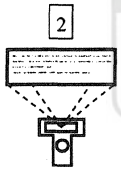 Auto Test	1 Make sure the air suspension switch is ON. 2 If the function test codes 211 through 228 are continuously displayed C205, circuit 425 (BR/PK), is not at ground. Possibly caused by the air suspension switch or involved circuitry. • Are DTCs 211 through 228 displayed? → **Yes** GO to **C7**. → **No** GO to **C2**.
C2 CHECK FOR DTCs	
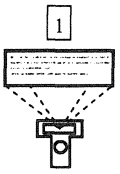 Auto Test	1 Perform the Auto Test and check for DTCs. • Are any DTCs retrieved? → **Yes** GO to the Air Suspension/Electronic Variable Orifice (EVO) Control Module Diagnostic Trouble Code (DTC) Index. → **No** GO to **C3**.

(Continued)

Official Licensed Product Ford Motor Company

DIAGNOSIS AND TESTING (Continued)

PINPOINT TEST C: NO COMMUNICATION WITH THE MODULE — AIR SUSPENSION/EVO MODULE (Continued)

TEST CONDITIONS	TEST DETAILS/RESULTS/ACTIONS
C3 CHECK CIRCUIT 418 (DG/Y) FOR B+	
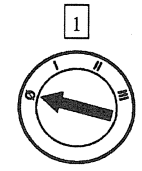 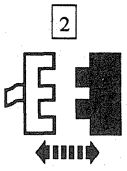 EVO Control Module C204	
3 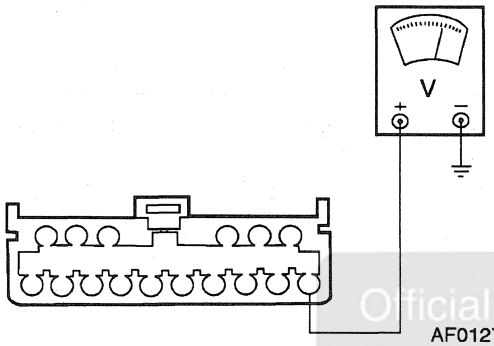 AF0127-B	3 Measure the voltage between EVO control module C204-1, circuit 418 (DG/Y), and ground.
4 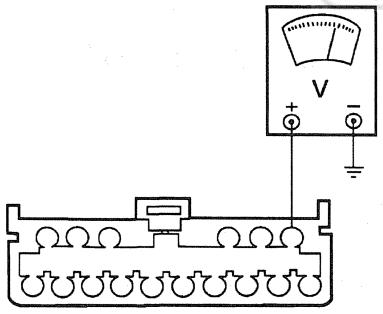 AF0128-B	4 Measure the voltage between EVO control module C204-21, circuit 418 (DG/Y), and ground. • Is the voltage greater than 10 volts on both circuits? → **Yes** GO to **C4**. → **No** REPAIR circuit 418 (DG/Y). REPEAT the Auto Test.

Official Licensed Product
Ford Motor Company

(Continued)

DIAGNOSIS AND TESTING (Continued)

PINPOINT TEST C: NO COMMUNICATION WITH THE MODULE — AIR SUSPENSION/EVO MODULE (Continued)

TEST CONDITIONS	TEST DETAILS/RESULTS/ACTIONS
C4 CHECK CIRCUIT 298 (P/O) FOR VOLTAGE	
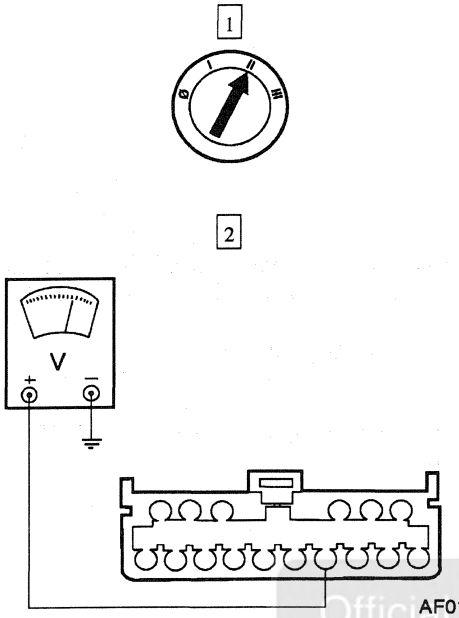	2 Measure the voltage between EVO control module C204-4, circuit 298 (P/O), and ground. • Is the voltage greater than 10 volts? → **Yes** GO to **C5**. → **No** REPAIR circuit 298 (P/O). REPEAT the Auto Test.
C5 CHECK CIRCUIT 938 (BK/LG) FOR GROUND	
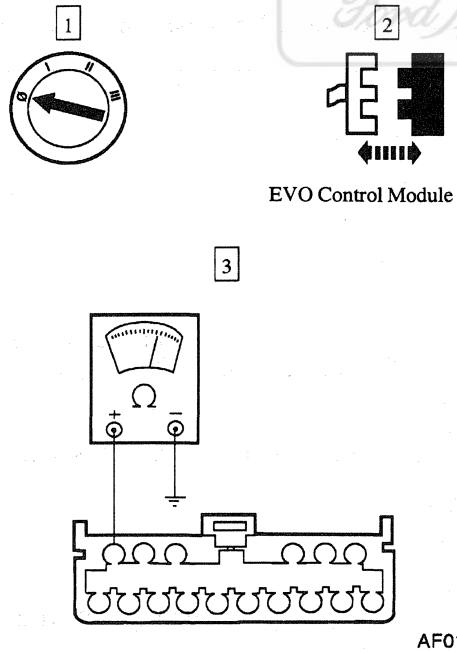	3 Measure the resistance between EVO control module C205-32, circuit 938 (BK/LG), and ground. • Is the resistance less than 5 ohms? → **Yes** GO to **C6**. → **No** REPAIR circuit 938 (BK/LG). REPEAT the Auto Test.

Official Licensed Product Ford Motor Company

(Continued)

DIAGNOSIS AND TESTING (Continued)

PINPOINT TEST C: NO COMMUNICATION WITH THE MODULE — AIR SUSPENSION/EVO MODULE (Continued)

TEST CONDITIONS	TEST DETAILS/RESULTS/ACTIONS
C6 CHECK CIRCUIT 419 (DG/LG) FOR SHORT TO POWER	
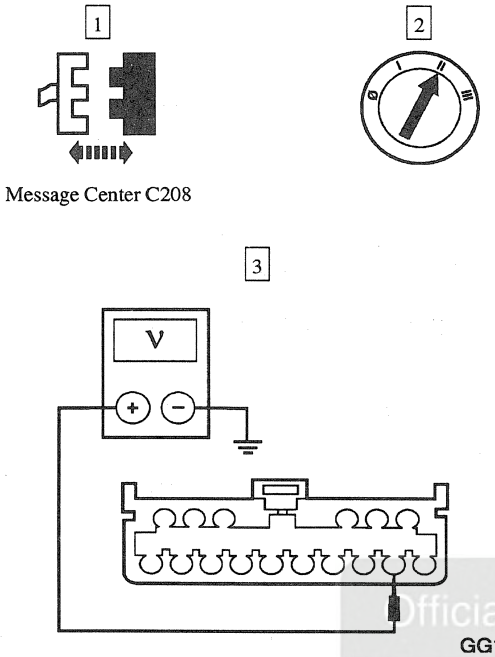	3 Measure the voltage between EVO control module C205-12, circuit 419 (DG/LG), and ground. • Is any voltage indicated? → **Yes** REPAIR circuit 419 (DG/LG). REPEAT the Auto Test. → **No** GO to **C7**.
C7 ISOLATE SHORT TO GROUND	
NOTE: A short to ground in Circuit 419 (DG/LG) will cause CHECK AIR RIDE to be displayed in the message center, even if no air suspension system damage exists.	
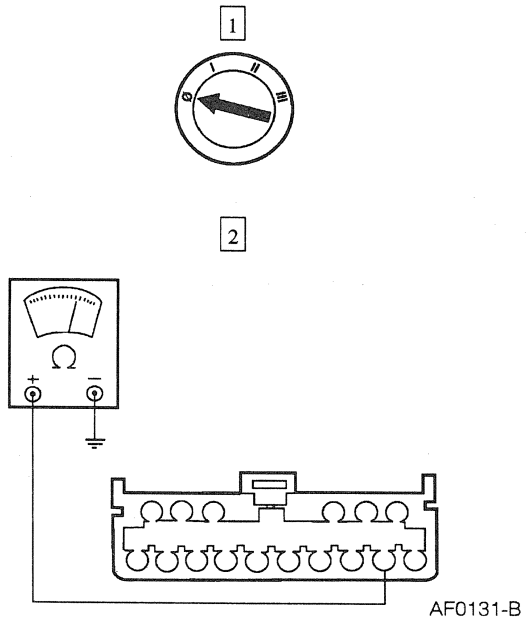	2 Measure the resistance between EVO control module C205-12, circuit 419 (DG/LG), and ground. • Is the resistance greater than 10,000 ohms? → **Yes** GO to **C8**. → **No** REPAIR circuit 419 (DG/LG). REPEAT Auto Test.

(Continued)

Official Licensed Product

DIAGNOSIS AND TESTING (Continued)

PINPOINT TEST C: NO COMMUNICATION WITH THE MODULE — AIR SUSPENSION/EVO MODULE (Continued)

TEST CONDITIONS	TEST DETAILS/RESULTS/ACTIONS
C8 CHECK AIR SUSPENSION/STEERING TEST CONNECTOR CIRCUIT 419 (DG/LG)	
1 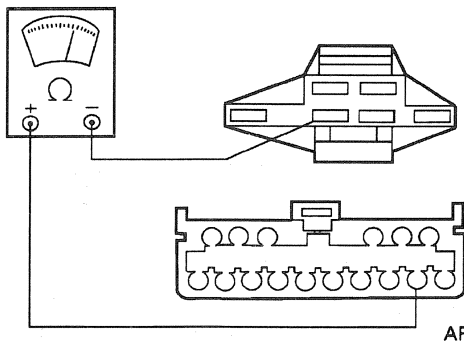 AF0132-B	1 Measure the resistance between EVO control module C205-12, circuit 419 (DG/LG) and steering and suspension diagnostic test C117-4, circuit 419 (DG/LG). • Is the resistance less than 5 ohms? → **Yes** GO to **C9**. → **No** REPAIR circuit 419 (DG/LG). REPEAT the Auto Test.
C9 CHECK CIRCUIT 844 (GY/R)	
1 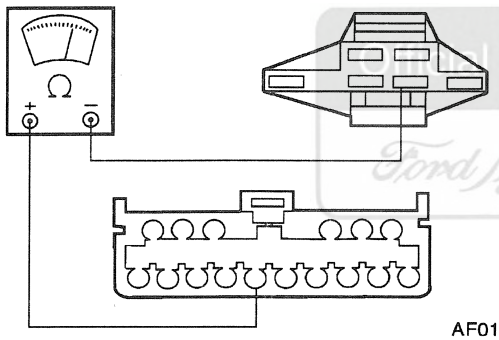 AF0133-B	1 Measure the resistance between EVO control module C204-6, circuit 844 (GY/R) and steering and suspension diagnostic test C117-5, circuit 844 (GY/R). • Is the resistance less than 5 ohms? → **Yes** GO to **C10**. → **No** REPAIR circuit 844 (GY/R). REPEAT the Auto Test.
C10 CHECK CIRCUIT 844 (GY/R) FOR SHORT TO GROUND	
1 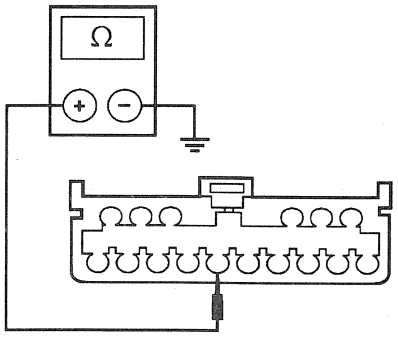 GG1152-A	1 Measure the resistance between EVO control module C204-6, circuit 844 (GY/R), and ground. • Is the resistance greater than 10,000 ohms? → **Yes** GO to **C11**. → **No** REPAIR circuit 844 (GY/R) for short to ground. REPEAT the Auto Test.

(Continued)

Ford Licensed Product
Ford Motor Company

DIAGNOSIS AND TESTING (Continued)

PINPOINT TEST C: NO COMMUNICATION WITH THE MODULE — AIR SUSPENSION/EVO MODULE (Continued)

TEST CONDITIONS	TEST DETAILS/RESULTS/ACTIONS
C11 CHECK CIRCUIT 844 (GY/R) FOR SHORT TO POWER	
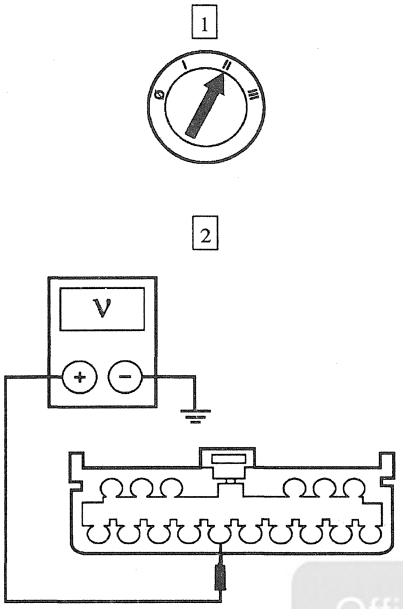	2 Measure the voltage between EVO control module C204-6, circuit 844 (GY/R), and ground. • Is any voltage indicated? → **Yes** REPAIR circuit 844 (GY/R). REPEAT the Auto Test. → **No** GO to **C12**.
C12 CHECK CIRCUIT 413 (LG) FOR OPEN	
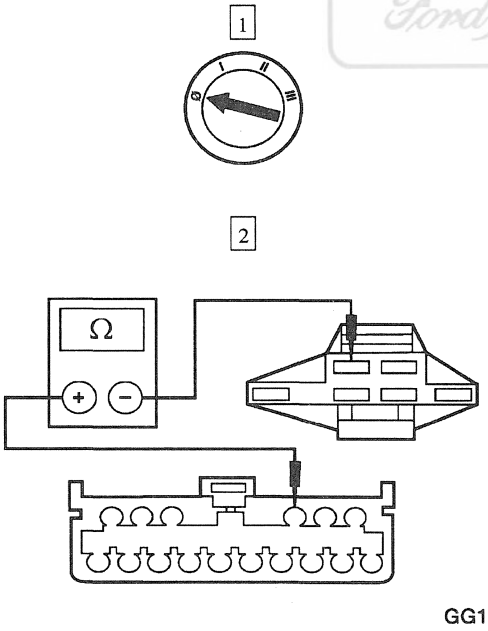	2 Measure the resistance between EVO control module C205-29, circuit 413 (LG), and steering and suspension diagnostic test C117-1, circuit 413 (LG). • Is the resistance less than 5 ohms? → **Yes** GO to **C13**. → **No** REPAIR circuit 413 (LG). REPEAT the Auto Test.

Officially Licensed Product
Ford Motor Company

(Continued)

DIAGNOSIS AND TESTING (Continued)

PINPOINT TEST C: NO COMMUNICATION WITH THE MODULE — AIR SUSPENSION/EVO MODULE (Continued)

TEST CONDITIONS	TEST DETAILS/RESULTS/ACTIONS
C13 CHECK CIRCUIT 412 (O/LB) FOR OPEN	
1 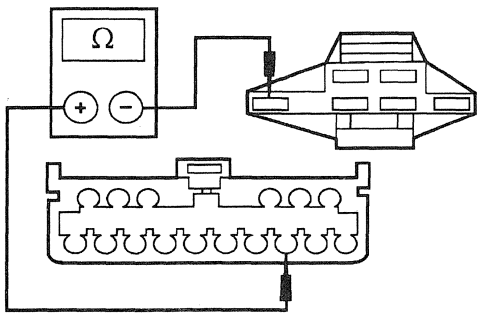 GG1155-A	1 Measure the resistance between EVO control module C205-13, circuit 412 (O/LB), and steering and suspension diagnostic test C117-3, circuit 412 (O/LB). • Is the resistance less than 5 ohms? → **Yes** GO to **C14**. → **No** REPAIR circuit 412 (O/LB). REPEAT the Auto Test.
C14 CHECK CIRCUIT 412 (O/LB) AND CIRCUIT 413 (LG) FOR SHORT TO POWER	
1 2 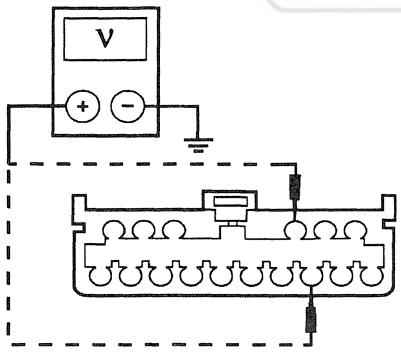 GG1156-A	2 Measure the voltage between EVO control module C205-13, circuit 412 (O/LB), and ground; and C205-29, circuit 413 (LG), and ground. • Is any voltage indicated? → **Yes** REPAIR circuit 412 (O/LB) or circuit 413 (LG). REPEAT the Auto Test. → **No** GO to **C15**.

Official Licensed Product
Ford Motor Company

(Continued)

DIAGNOSIS AND TESTING (Continued)

PINPOINT TEST C: NO COMMUNICATION WITH THE MODULE — AIR SUSPENSION/EVO MODULE (Continued)

TEST CONDITIONS	TEST DETAILS/RESULTS/ACTIONS
C15 CHECK CIRCUIT 412 (O/LB) AND CIRCUIT 413 (LG) FOR SHORT TO GROUND	
1 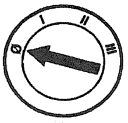 2 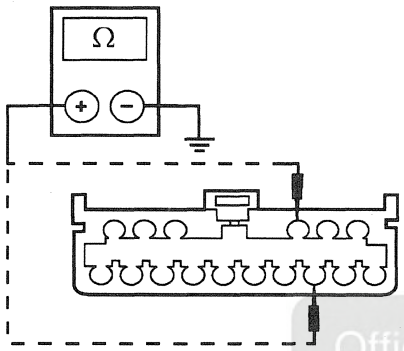 GG1157-A	2 Measure the resistance between EVO control module C205-13, circuit 412 (O/LB), and ground; and C205-29, circuit 413 (LG), and ground. • Is the resistance greater than 10,000 ohms? → **Yes** GO to **C16**. → **No** REPAIR circuit 412 (O/LB) or circuit 413 (LG). REPEAT the Auto Test.
C16 CHECK CIRCUIT 938 (BK/LG)	
1 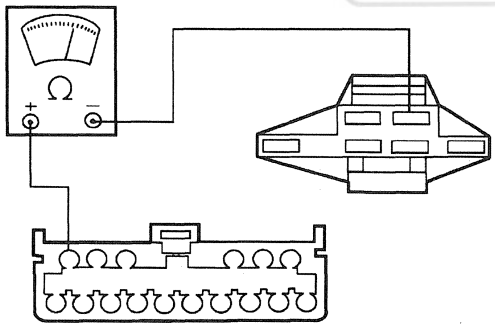 AF0134-B	1 Measure the resistance between EVO control module C205-32, circuit 938 (BK/LG), and steering and suspension diagnostic test C117-2, circuit 938 (BK/LG). • Is the resistance 5 ohms or less? → **Yes** GO to **C17**. → **No** REPAIR circuit 938 (BK/LG). REPEAT the Auto Test.

Official Licensed Product
Ford Motor Company

(Continued)

DIAGNOSIS AND TESTING (Continued)

PINPOINT TEST C: NO COMMUNICATION WITH THE MODULE — AIR SUSPENSION/EVO MODULE (Continued)

TEST CONDITIONS	TEST DETAILS/RESULTS/ACTIONS
C17 CHECK AIR SUSPENSION SWITCH	
1 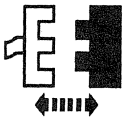 Air Suspension Switch C458 2 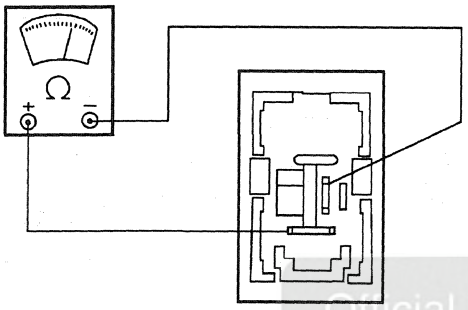 AF0135-A	2 Measure the resistance between two terminals on the air suspension switch. Make sure the air suspension switch is in the ON position. • Is the resistance less than 5 ohms? → **Yes** GO to **C18**. → **No** REPLACE the air suspension switch. REPEAT the Auto Test.
C18 CHECK CIRCUIT 57 (BK)	
1 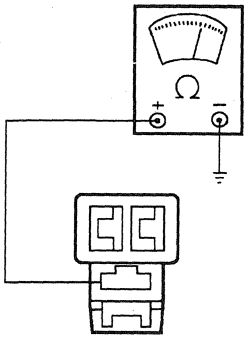 AF0136-A	1 Measure the resistance between the air suspension switch C458, circuit 57 (BK), and ground. • Is the resistance less than 5 ohms? → **Yes** GO to **C19**. → **No** REPAIR circuit 57 (BK). REPEAT the Auto Test.

Official Licensed Product
Ford Motor Company

(Continued)

DIAGNOSIS AND TESTING (Continued)

PINPOINT TEST C: NO COMMUNICATION WITH THE MODULE — AIR SUSPENSION/EVO MODULE (Continued)

TEST CONDITIONS	TEST DETAILS/RESULTS/ACTIONS
C19 CHECK CIRCUIT 425 (BK/PK) FOR AN OPEN	
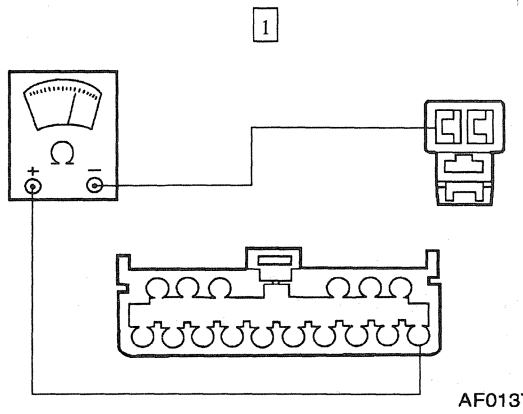	1 Measure the resistance between EVO control module C205-11, circuit 425 (BK/PK), and air suspension switch C458, circuit 425 (BK/PK). • Is the resistance 5 ohms or less? → **Yes** REPLACE the EVO control module. REPEAT the Auto Test. → **No** REPAIR circuit 425 (BK/PK). REPEAT the Auto Test.

PINPOINT TEST D: STEERING DOES NOT VARY WITH VEHICLE SPEED

TEST CONDITIONS	TEST DETAILS/RESULTS/ACTIONS
D1 CHECK SPEEDOMETER OPERATION	
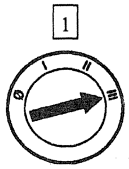	2 Test drive the vehicle and observe the speedometer. • Does the speedometer operate? → **Yes** GO to **D2.** → **No** GO to Section 413-01 for the speedometer diagnosis.
D2 CHECK FOR SPEED SIGNAL AT CONTROL MODULE	
	1 Turn the air suspension switch to OFF. 3 Select EVO Function Test 226.

Official Licensed Product
Ford Motor Company

(Continued)

DIAGNOSIS AND TESTING (Continued)

PINPOINT TEST D: STEERING DOES NOT VARY WITH VEHICLE SPEED (Continued)

TEST CONDITIONS	TEST DETAILS/RESULTS/ACTIONS
D2 CHECK FOR SPEED SIGNAL AT CONTROL MODULE (Continued)	
	4 Test drive the vehicle at speeds over 16 km/h (10 mph) and compare the speedometer and the New Generation Star (NGS) Tester readouts. • Do the displayed speeds agree? → **Yes** REFER to Symptom Chart to identify possible mechanical or hydraulic concerns. If no other concerns are identified, REPLACE the EVO control module. → **No** GO to **D3**.
D3 CHECK CONNECTOR WIRING	
1 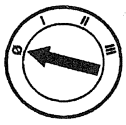 2 EVO Control Module C204	3 Check the wiring for damage and make sure C204-3 is circuit 150 (DG/W) and C204-23 is circuit 938 (BK/LG). • Are the wires damaged or crossed? → **Yes** REPAIR the wires. REPEAT Step D2. → **No** GO to **D4**.
D4 CHECK VEHICLE SPEED SENSOR CIRCUIT RESISTANCE	
1 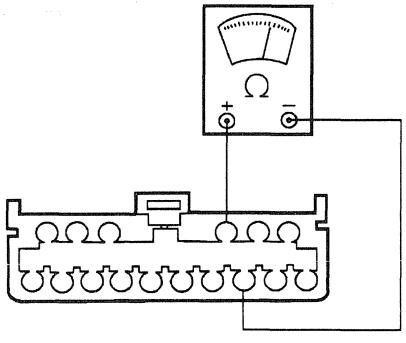 AF0138-B	1 Measure the resistance between EVO control module C204-3, circuit 150 (DG/W) and C204-23, circuit 938 (BK/LG). • Is the resistance between 180 and 240 ohms? → **Yes** INSPECT the connector pins. CLEAN and REPAIR as needed. If the connector pins do not need repair, REPLACE the EVO control module. RETEST the system. → **No** GO to **D5**.

Official Licensed Product
Ford Motor Co.

(Continued)

DIAGNOSIS AND TESTING (Continued)

PINPOINT TEST D: STEERING DOES NOT VARY WITH VEHICLE SPEED (Continued)

TEST CONDITIONS	TEST DETAILS/RESULTS/ACTIONS
D5 CHECK VEHICLE SPEED SENSOR RESISTANCE	
1 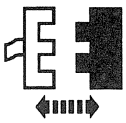 Vehicle Speed Sensor C111 2 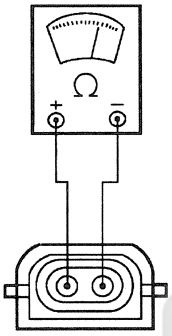 AF0139-A	2 Measure the resistance between the vehicle speed sensor terminals. • Is the resistance between 180 and 240 ohms? → **Yes** GO to **D6**. → **No** REPLACE the vehicle speed sensor. RETEST the system.
D6 CHECK CIRCUIT 938 (BK/LG) FOR OPEN	
1 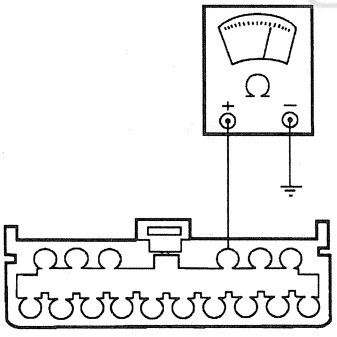 AF0140-B	1 Measure the resistance between EVO control module C204-23, circuit 938 (BK/LG), and ground. • Is the resistance less than 5 ohms? → **Yes** GO to **D7**. → **No** REPAIR circuit 938 (BK/LG) for an open. RETEST the system.

Official Licensed Product
Ford Motor Company

(Continued)

DIAGNOSIS AND TESTING (Continued)

PINPOINT TEST D: STEERING DOES NOT VARY WITH VEHICLE SPEED (Continued)

TEST CONDITIONS	TEST DETAILS/RESULTS/ACTIONS
D7 CHECK CIRCUIT 150 (DG/W) FOR SHORT TO GROUND	
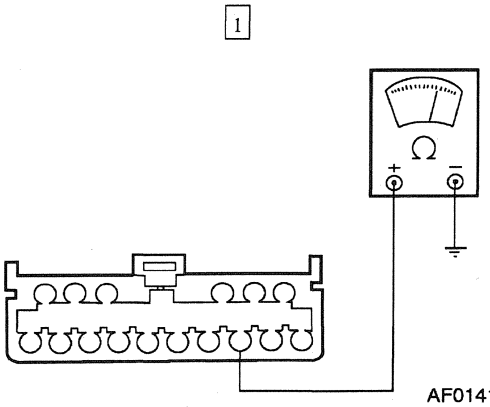	1 Measure the resistance between EVO control module C204-3, circuit 150 (DG/W), and ground. • Is the resistance greater than 10,000 ohms? → **Yes** GO to **D8**. → **No** REPAIR circuit 150 (DG/W). RETEST the system.
D8 CHECK CIRCUIT 150 (DG/W) FOR OPEN	
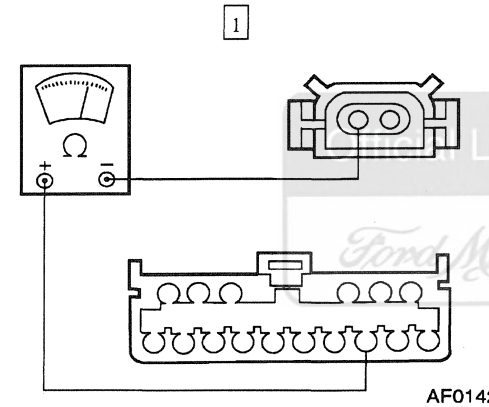	1 Measure the resistance between EVO control module C204-3, circuit 150 (DG/W), and the vehicle speed sensor C111, circuit 150 (DG/W). • Is the resistance less than 5 ohms? → **Yes** GO to **D9**. → **No** REPAIR circuit 150 (DG/W). RETEST the system.
D9 CHECK FOR CIRCUIT TO CIRCUIT SHORT	
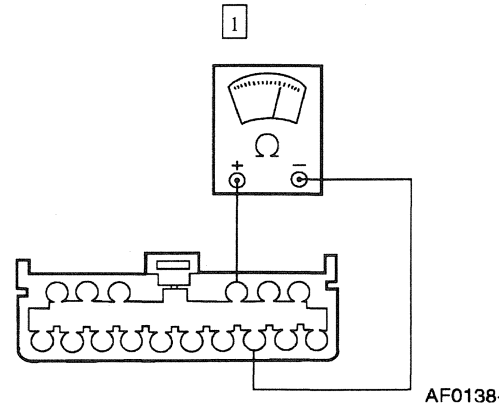	1 Measure the resistance between EVO control module C204-3, circuit 150 (DG/W) and C204-23, circuit 938 (BK/LG). • Is the resistance greater than 10,000 ohms? → **Yes** RESTORE the vehicle. REPEAT step D2. → **No** REPAIR circuit 150 (DG/W) for a short to circuit 938 (BK/LG). RETEST the system.

Ford Motor Company Licensed Product

DIAGNOSIS AND TESTING (Continued)

Component Tests

Steering Linkage

1. **NOTE:** Another method is to raise the front tires off the ground, grasp the tire at the front and rear and watch for excessive play in the joints while trying to pivot the wheel by hand.

   With the parking brake applied, perform the following:

   1 **NOTE:** Excessive vertical or horizontal motion of the stud relative to the steering linkage ball sockets may indicate excessive wear.

   Have an assistant rotate the steering wheel back and forth 360 degrees and watch for relative motion of the studs in the steering linkage ball sockets.

   2 Watch for a loose steering gear attachment to the frame.

2. **NOTE:** Improper separation of the tapered stud from its seat will cause premature failure of the ball socket.

   Steel, greaseable joints can be checked for excessive wear by measuring the torque it takes to turn the stud.

   1 Separate the tapered stud from its seat and thread the attaching nut back onto the stud.

   2 Turn the stud with an inch-pound torque wrench and note the torque required to turn the stud.

Torque Required to Turn Stud in Socket	Nm	Lb/In
New Steel Joints	2.0-5.3	17.8-47.3
Used Steel Joints	0.5-3	5-26.5
Steel Joints With Excessive Play	0-0.5	0-5

   3 Some joint turning torques will be as little as 0.5 Nm (5 lb-in) within the first 1000 miles and will remain there for the life of the joint.

   4 Only replace a ball joint that requires less than 0.5 Nm (5 lb-in).

   5 Replace loose, worn or damaged parts; refer to Section 211-02.

Pump Flow and Pressure Test

WARNING: DO NOT TOUCH THE FLOWMETER DURING THE TEST PROCEDURE OR SEVERE BURNS AND SERIOUS INJURY MAY OCCUR.

1. **CAUTION: Ensure that the connection point will not interfere with any of the engine accessory drive components or drive belts.**

   Install Power Steering Analyzer at the high pressure port of the power steering pump. Make sure the power steering analyzer gate valve is fully open.

   1 On some vehicles, the power steering pump high pressure port is inaccessible and Power Steering Analyzer should then be installed either at the steering gear or at a point in the high pressure line between the power steering pump and the steering gear.

2. Place a dial thermometer in the power steering pump reservoir.

3. Check the power steering fluid level. If necessary, add power steering fluid.

   - Use Motorcraft MERCON® Multi-Purpose ATF XT-2-QDX or MERCON® equivalent.

4. Install the digital tachometer.

5. **CAUTION: Do not hold the steering wheel against the stops for more than three to five seconds at a time. Damage to the power steering pump will occur.**

   Start the engine. Place the transmission in neutral. Set the parking brake. Raise the power steering fluid temperature to 74-80°C (165-175°F) by rotating the steering wheel fully to the left and right several times.

6. Set the engine speed to idle. Record the flow rate and pressure readings.

   - If the flow rate is below the idle flow rate specification, the power steering pump may require repair. Continue with the test procedure.
   - If the pressure reading is above the idle pressure specification, check power steering hoses for kinks and restrictions.

Official Licensed Product Ford Motor Company

DIAGNOSIS AND TESTING (Continued)

- If the pressure reading is above the idle pressure specification, check power steering hoses for kinks and restrictions.

7. Partially close the gate valve to obtain 740 psi. Record the flow rate.
   - If the flow rate is less than the specified flow rate, replace the power steering pump.
8. **CAUTION: Do not allow the gate valve to remain closed for more than five seconds.**

   Completely close and partially open the gate valve three times. Record the pressure relief valve actuation pressure reading.
   - If the pressure does not meet the relief pressure specification, replace the power steering pump.
9. Set the engine speed to 1500 rpm. Record the flow rate.
   - If the flow rate varies more than 3.785 liters/minute (1 gallon/minute) from initial flow rate reading, replace the power steering pump.
10. **CAUTION: Do not hold the steering wheel against the stops for more than three to five seconds at a time. Damage to the power steering pump will occur.**

    Set the engine speed at idle. Turn (or have an assistant turn) the steering wheel to the left and right stops. Record flow rate and pressure readings at the stops.
    - The pressure reading at both stops should be nearly the same as the maximum pump relief pressure.
    - The flow rate should drop below 1.9 liters/minute (0.5 gallons/minute).
    - If the pressure does not reach the maximum pump relief pressure or the flow rate does not drop below the specified value, excessive internal leakage is occurring. Repair or replace the steering gear as necessary; refer to Section 211-02.
11. Turn (or have an assistant turn) the steering wheel slightly in both directions and release quickly while watching the pressure gauge.
    - The pressure reading should move from the normal back pressure reading and snap back as the steering wheel is released.
    - If the pressure returns slowly or sticks, the rotary valve in the steering column is binding. Check the steering column and linkage before repairing the steering gear.

Turning Effort Test

NOTE: Make sure front wheels are properly aligned and tire pressure is correct before checking turning effort.

1. Park vehicle on dry concrete and set parking brake.
2. Idle engine for two to three minutes. Turn steering wheel to the left and right several times to warm fluid to 43-49°C (110-120°F).
3. Select steering effort — Normal, High or Low as required.
4. With engine running, attach a pull scale to rim of steering wheel. Measure pull required to turn one complete revolution in each direction. For Static Steering Wheel Turning Effort; refer to Specifications.

Steering Gear Insulator

1. With the wheel normally loaded (on the ground), check the steering gear housing for excessive lateral movement.
   - If the steering gear housing moves more than 1.5 mm (0.05 in), the steering gear insulators may have deteriorated or the steering gear mounting bracket nuts may have loosened. Tighten the steering gear mounting bracket nuts.
   - If the steering gear housing movement is still excessive after tightening the gear mounting bracket nuts, replace the steering gear insulators.

Steering Gear Valve

1. With the vehicle in motion, place the transmission in neutral (N) and turn the engine OFF.
   - If the vehicle does not pull with the engine OFF, repair or replace the steering gear; refer to Section 211-02.

   1 If the vehicle pull direction does not change, check the front suspension components and wheel alignment; refer to Section 204-00 and refer to Section 204-01.

Official Licensed Product Ford Motor Company

GENERAL PROCEDURES

System Flushing

WARNING: DO NOT MIX FLUID TYPES ANY MIXTURE OR ANY UNAPPROVED FLUID COULD LEAD TO SEAL DETERIORATION AND LEAKS. A LEAK COULD ULTIMATELY CAUSE LOSS OF FLUID, WHICH COULD RESULT IN A LOSS OF POWER STEERING ASSIST.

1. Remove the ignition coil fuse number 11 (10 amp) from the fuse junction panel to disable the engine from starting.

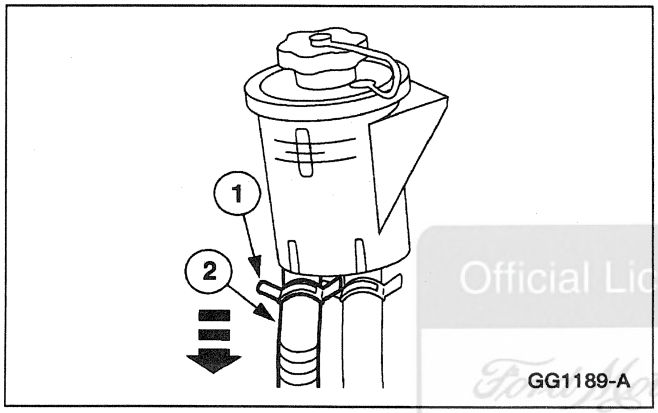

2. Disconnect the power steering return hose.
   1 Compress and move the hose clamp.
   2 Disconnect the power steering return hose and plug the fitting to the reservoir.

Official Licensed Product
Ford Motor Company

3. Attach an extension hose between the power steering hose and an empty container.

4. Raise the front wheels off the floor; refer to Section 100-02.

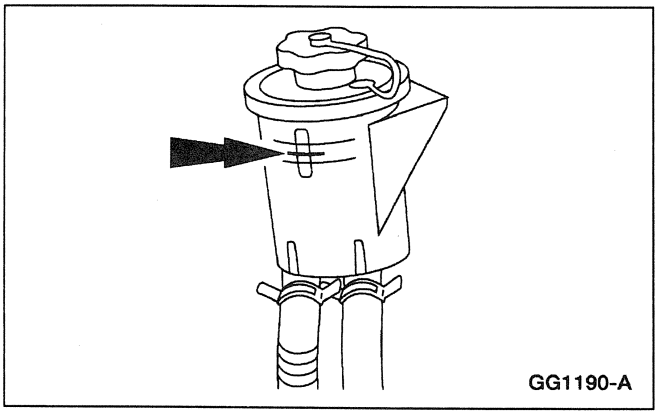

5. Fill the power steering reservoir.
   - Use Motorcraft MERCON® Multi-Purpose Transmission Fluid XT-2-QDX or equivalent meeting Ford specification MERCON®.

GENERAL PROCEDURES (Continued)

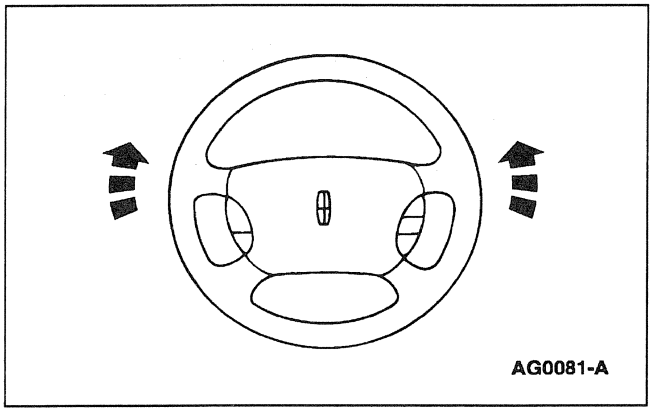

6. ⚠ **CAUTION: Do not operate the starter motor for more than 10 seconds at a time. Damage to the starter motor could result.**

   Turn the steering wheel from stop to stop while cranking the engine. Refill the power steering pump as necessary until the fluid exiting the extension hose is clear.

7. Lower the vehicle.

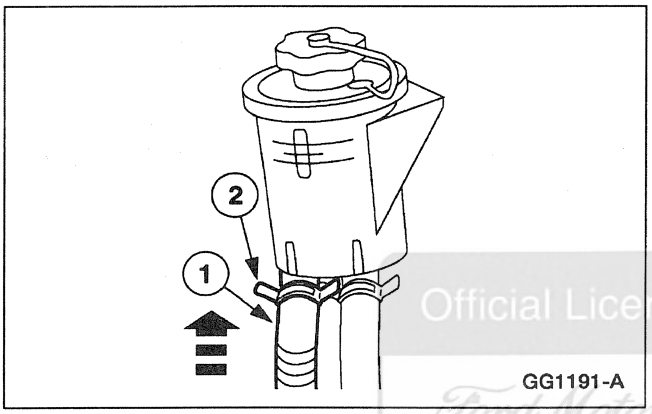

8. Remove the extension hose and connect the power steering return hose to the power steering pump reservoir.
   1. Remove the plug and connect the power steering return hose.
   2. Compress and move the clamp into place.

Official Licensed Product
Ford Motor Company

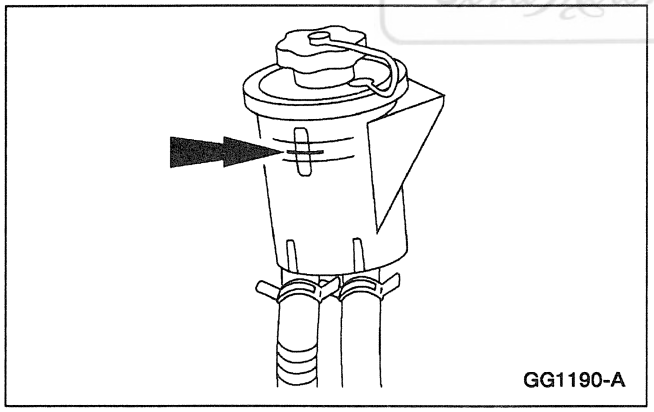

9. ⚠ **CAUTION: Do not overfill the power steering fluid reservoir.**

   Fill the power steering fluid reservoir to the appropriate level.

   - Use Motorcraft MERCON® Multi-Purpose Transmission Fluid XT-2-QDX or equivalent meeting Ford specification MERCON®.

10. Install the ignition coil fuse number 11 (10 amp) in the fuse junction panel.

GENERAL PROCEDURES (Continued)

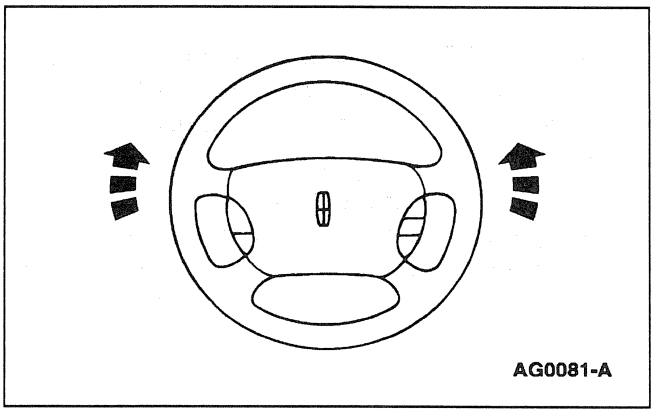

11. ⚠ **CAUTION: Do not hold the steering wheel in the far left or right position or damage to power steering may result.**

    Start the engine and turn the steering wheel from stop to stop.

12. **NOTE:** If power steering is noisy and accompanied by evidence of aerated fluid it will be necessary to purge the power steering system.

    Check power steering fluid level.

13. Clear the diagnostic trouble codes (DTCs); refer to Section 2A in Powertrain Control/Emissions Diagnosis Manual [2].
    - Run vehicle and check system for leaks.

Official Licensed Product
Ford Motor Company

Purging

Special Tool(s)

ST1176-A	Vacuum Tester or equivalent 014-R1054

2 Can be purchased as a separate item.

GENERAL PROCEDURES (Continued)

⚠ CAUTION: If the air is not purged from the power steering system correctly, pump failure could result. This condition can occur on pre-delivery vehicles with evidence of aerated fluid or on vehicles that had steering component repairs.

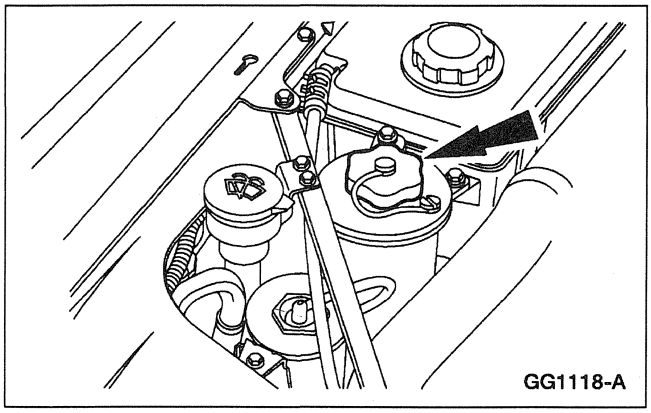

1. **NOTE:** A whine heard from the power steering pump may be caused by air in the system. The power steering purge procedure must be performed prior to any component repair for which power steering noise complaints are accompanied by evidence of aerated fluid.

   Remove the fluid reservoir cap and check the fluid.

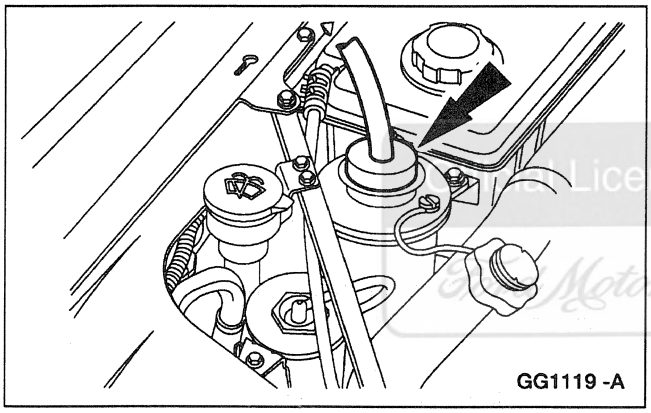

2. Tightly insert the stopper of the vacuum pump into the fluid reservoir.

Licensed Product
Ford Motor Company

3. Start the vehicle.

GENERAL PROCEDURES (Continued)

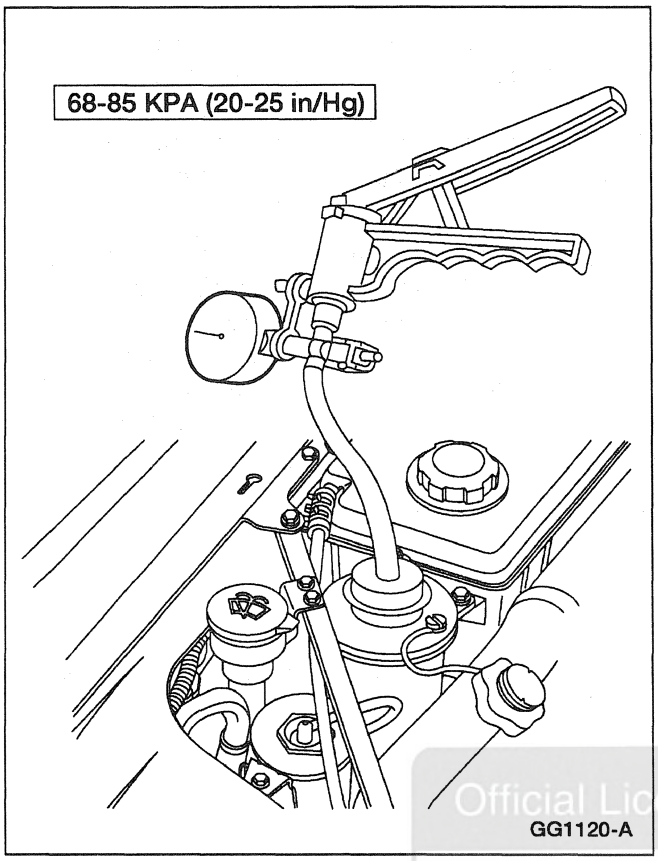

4. Apply maximum vacuum for a minimum of three minutes at idle. Maintain maximum vacuum with the source.

Official Licensed Product
Ford Motor Company

5. Release the vacuum and remove the vacuum source.

6. Add fluid to the appropriate level.
   - Use Motorcraft MERCON® Multi-Purpose Transmission Fluid XT-2-QDX or equivalent meeting Ford specification MERCON®.

GENERAL PROCEDURES (Continued)

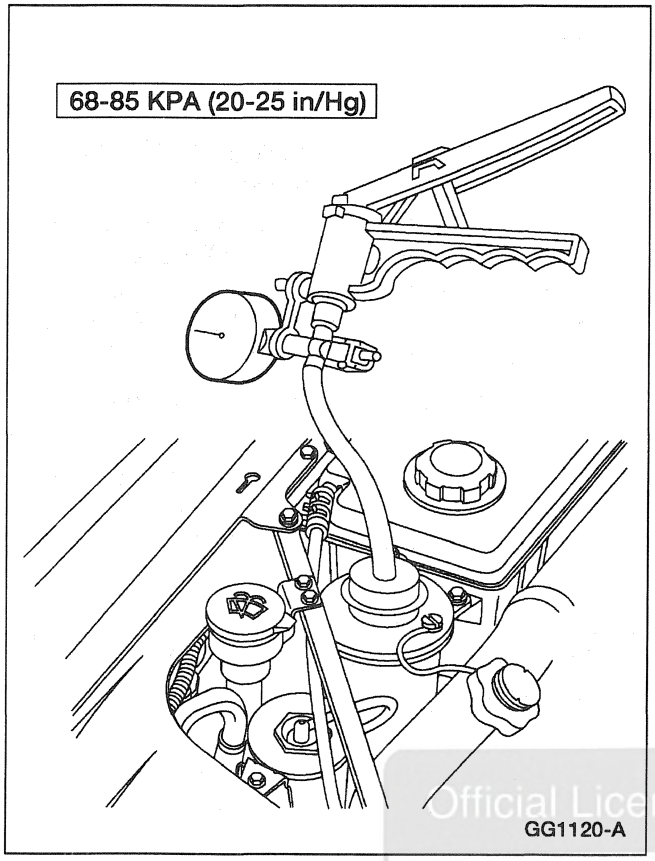

7. Reinstall the vacuum source and apply vacuum.

Official Licensed Product
Ford Motor Company

8. ⚠ **CAUTION: Do not hold the steering wheel in the far left or right position or damage to power steering may result.**

   Cycle the steering wheel from stop to stop every 30 seconds for approximately five minutes.

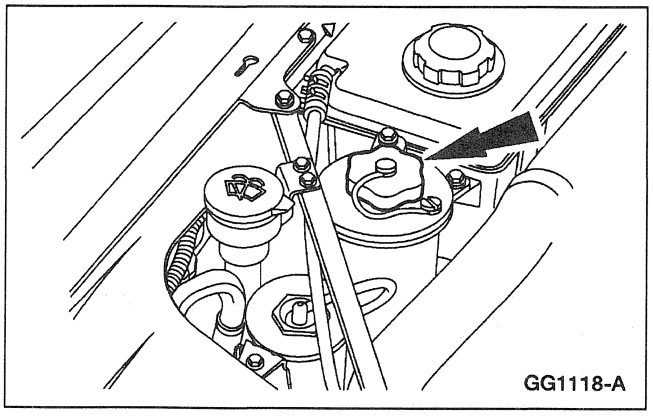

9. Remove the vacuum source and install the fluid reservoir cap.

10. Check fluid level and for oil leaks at all connections. If the power steering still shows signs of aeration, repeat this procedure.

GENERAL PROCEDURES (Continued)

Final Fill

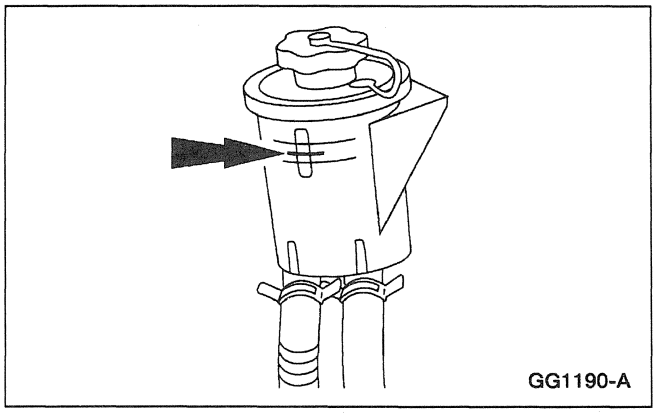

1. **WARNING: DO NOT MIX FLUID TYPES. ANY MIXTURE OR ANY UNAPPROVED FLUID COULD LEAD TO SEAL DETERIORATION AND LEAKS. A LEAK COULD ULTIMATELY CAUSE LOSS OF FLUID, WHICH COULD RESULT IN A LOSS OF POWER STEERING ASSIST.**

   Fill the power steering reservoir to appropriate level.

   - Use Motorcraft MERCON® Multi-Purpose Transmission Fluid XT-2-QDX or equivalent meeting Ford specification MERCON®.

2. Remove the ignition coil fuse number 11 (10 amp) from the fuse junction panel to disable the vehicle from starting.

3. Raise the front wheels off the floor; refer to Section 100-02.

Official Licensed Ford Motor Company

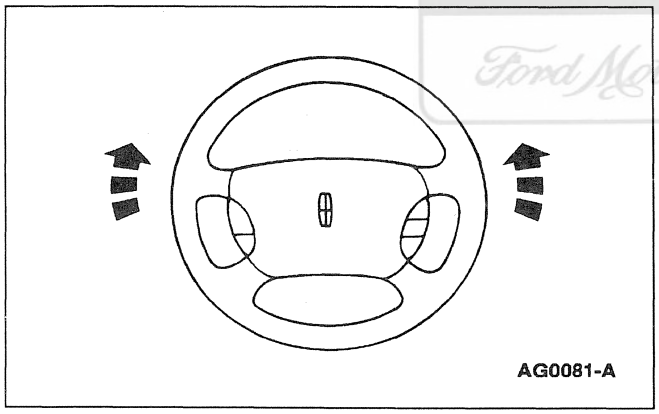

4. **CAUTION: Do not operate the starter motor for more than 10 seconds at a time. Damage to the starter motor could result.**

   Turn the steering wheel from stop to stop while cranking the engine.

5. Lower the vehicle.

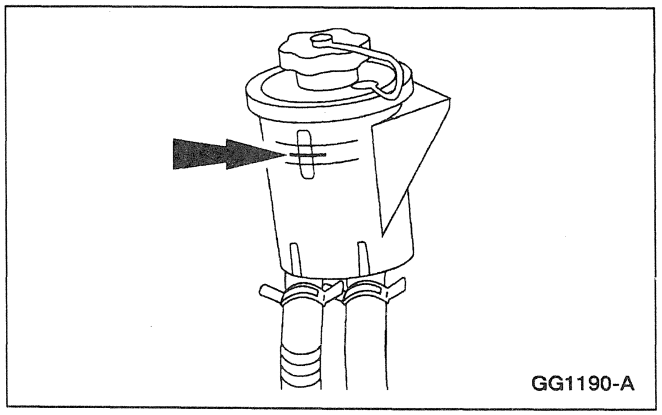

6. **CAUTION: Do not overfill the power steering fluid reservoir.**

   Fill the power steering fluid reservoir to the appropriate level.

   - Use Motorcraft MERCON® Multi-Purpose Transmission Fluid XT-2-QDX or equivalent meeting Ford specification MERCON®.

GENERAL PROCEDURES (Continued)

7. Install the ignition coil fuse number 11 (10 amp) in the fuse junction panel.

8. **NOTE:** If power steering is noisy and accompanied by evidence of aerated fluid it will be necessary to purge the power steering system.

   Clear the diagnostic trouble codes (DTCs).

   - Run vehicle and check system for leaks.

SPECIFICATIONS

General Specifications — Power Steering Pump Specifications

Engine	Minimum Flow[a]		Minimum Relief Pressure		Maximum Relief Pressure		Pump Model	Maximum Free Flow at 1500 rpm	
	Liters/ Minute	Gallons/ Minute	kPa	psi	kPa	psi		Liters/ Minute	Gallons/ Minute
4.6L (4V)	5.3	1.4	8275	1200	9520	1380	HBD-AN	10.2	2.7

a Flow depends on power steering pump model, engine rpm, and pulley drive ratio. Engine idle rpm must be set to specification when checking power steering pump minimum flow capacity.

General Specifications

Official Licensed Product Ford Motorcraft ®

Description	Specification
Vehicle Steering Ratio	17.25:1
Number of Turns	3.23
Power Steering Fluid Capacity (Including Steering Pump) L (Pints)	1.13 (2.4)
Power Steering Fluid	Motorcraft MERCON® Multi-Purpose ATF or equivalent fluid meeting MERCON® specification
Effort Required to Initiate Proper Input Shaft Rotation (Power Cylinder Drained and Gear Removed From Vehicle) Nm (Lb/In)	0.45-2.71 (4-24)
Tie Rod Articulation Effort (On Pull Scale) Nm (Lb/In)	2.3-11.3 (20-100)
Tie Rod Outer End Lubricant Part No. D7AZ-19590-A	ESA-M1C172-A
Steering Wheel Free Play mm (in)	0-30 (0-1.18)
Static Steering Wheel Turning Effort Nm (Lb/In)	2.6-3.5 (23-31)
Power Steering Relief Pressure kPa (psi)	8275-9520 (1200-1380)

SECTION 211-02 Power Steering

VEHICLE APPLICATION: Mark VIII

SUBJECT **PAGE**

DESCRIPTION AND OPERATION
- Power Steering 211-02-2
  - Electronic Variable Orifice (EVO) System 211-02-4
  - Power Steering Gear Identification 211-02-5
  - Power Steering Pump 211-02-4
  - Pump Identification 211-02-6
  - Steering Gear 211-02-4
  - Steering Gear Mounting 211-02-3
  - System View 211-02-2

DIAGNOSIS AND TESTING
- Power Steering 211-02-6

REMOVAL AND INSTALLATION
- Control Valve Actuator 211-02-18
- Gear 211-02-12
- Hose 211-02-11
- Module 211-02-16
- Pulley — Pump 211-02-10
- Pump 211-02-6
- Steering Sensor 211-02-20

SPECIFICATIONS 211-02-22

Official Licensed Product
Ford Motor Company

DESCRIPTION AND OPERATION

Power Steering

System View

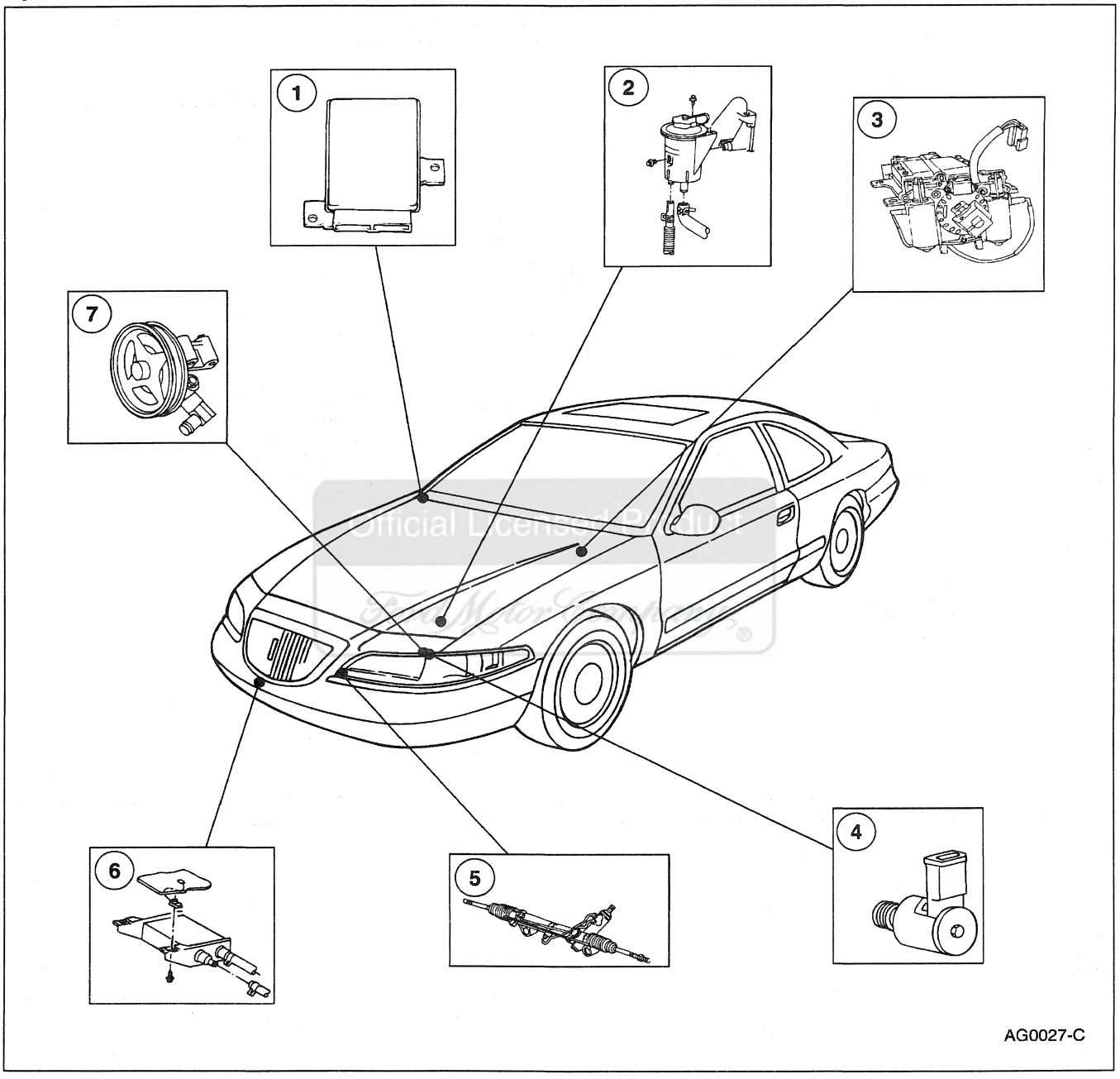

Item	Part Number	Description
1	5A919	Control Module
2	3E764	Power Steering Pump Reservoir

(Continued)

Item	Part Number	Description
3	18B015	Shock Absorber Electronic Steering Sensor

(Continued)

DESCRIPTION AND OPERATION (Continued)

Item	Part Number	Description
4	3783	Power Steering Control Valve Actuator

(Continued)

Item	Part Number	Description
5	3504	Steering Gear
6	3D716	Power Steering Fluid Cooler
7	3A674	Power Steering Pump

Steering Gear Mounting

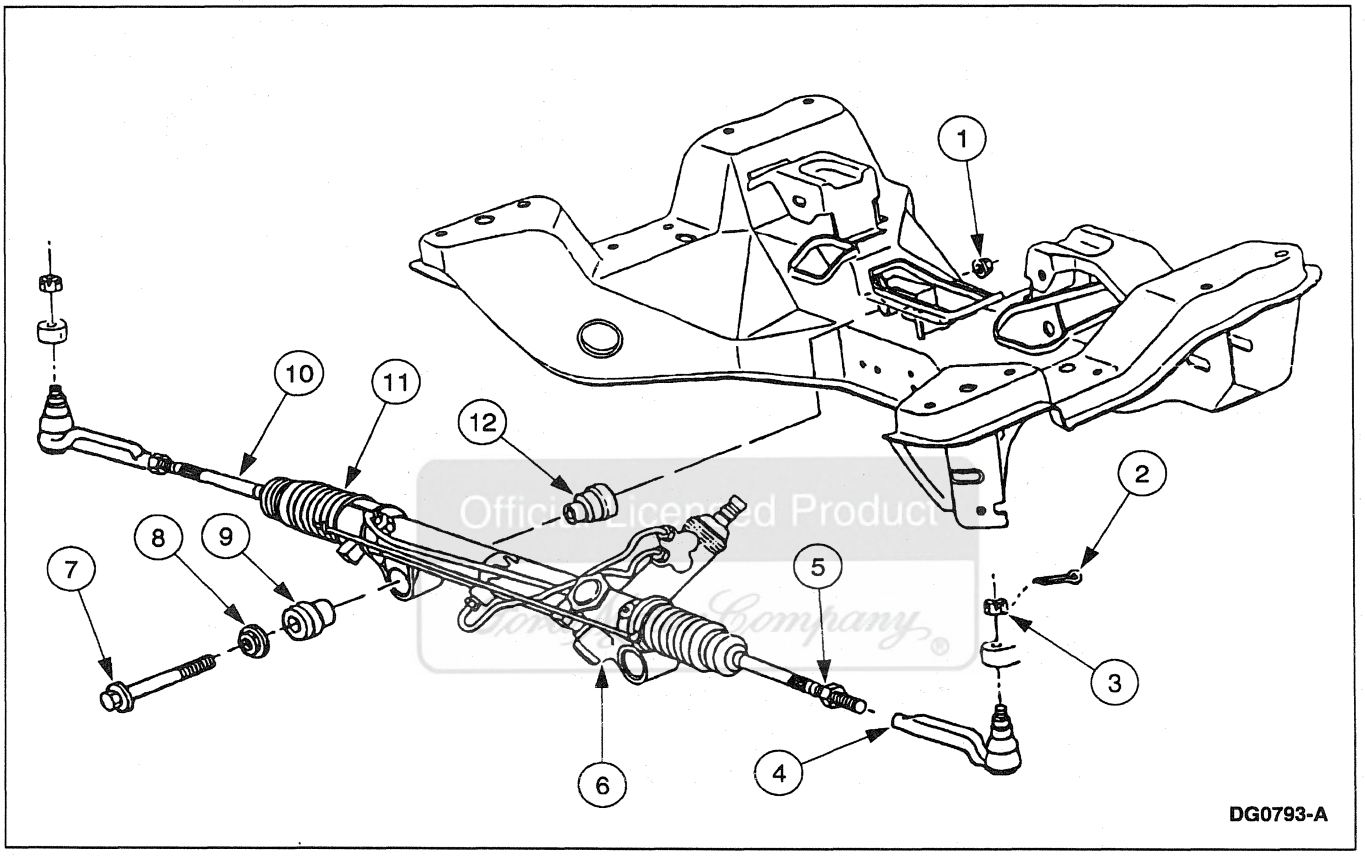

Item	Part Number	Description
1	N800237-S1050	Nut (2 Req'd)
2	72044-S36	Cotter Key
3	N803972-S150	Nut (2 Req'd)
4	3A130	Tie Rod End
5	N803637-S100	Jam Nut (2 Req'd)
6	3504	Steering Gear
7	N807147-S190	Bolt (2 Req'd)

(Continued)

Item	Part Number	Description
8	385935-S36	Washer (2 Req'd)
9	3F638	Insulator (2 Req'd)
10	3280	Front Wheel Spindle Tie Rod (2 Req'd)
11	3332	Front Suspension Steering Ball Stud Dust Seal
12	3K576	Insulator (2 Req'd)

DESCRIPTION AND OPERATION (Continued)

Steering Gear

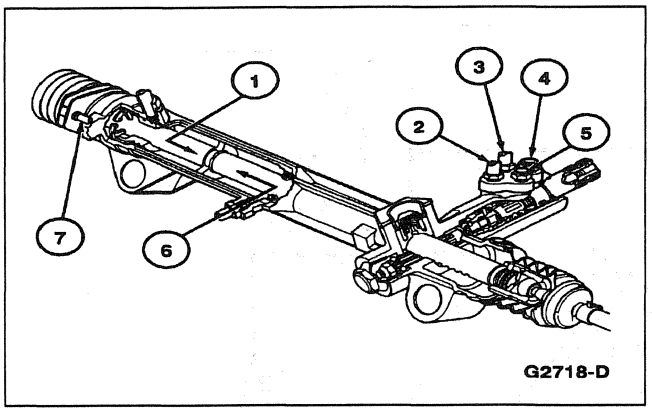

Item	Description
1	Oil Flow — Left Turn
2	To Left Turn Port
3	To Right Turn Port
4	Return Port (Out)
5	Pressure Port (In)
6	Oil Flow — Right Turn
7	Air Transfer Tube (Between Bellows)

Power Steering Pump

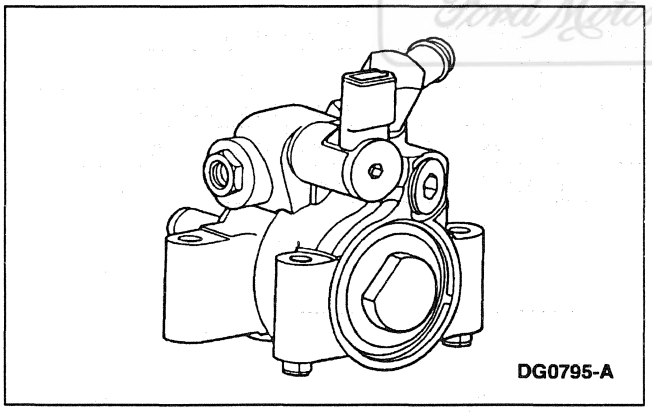

Electronic Variable Orifice (EVO) System

The electronic variable orifice (EVO) system varies the flow from the power steering pump (3A674) as a function of vehicle speed and steering wheel rate of rotation. The system provides:

- full power steering assist at low vehicle speed for light parking effort.
- minimum assist at high speed for good road feel and directional stability.
- high assist at high speed for evasive maneuvers.

Ford Motor Company

DESCRIPTION AND OPERATION (Continued)

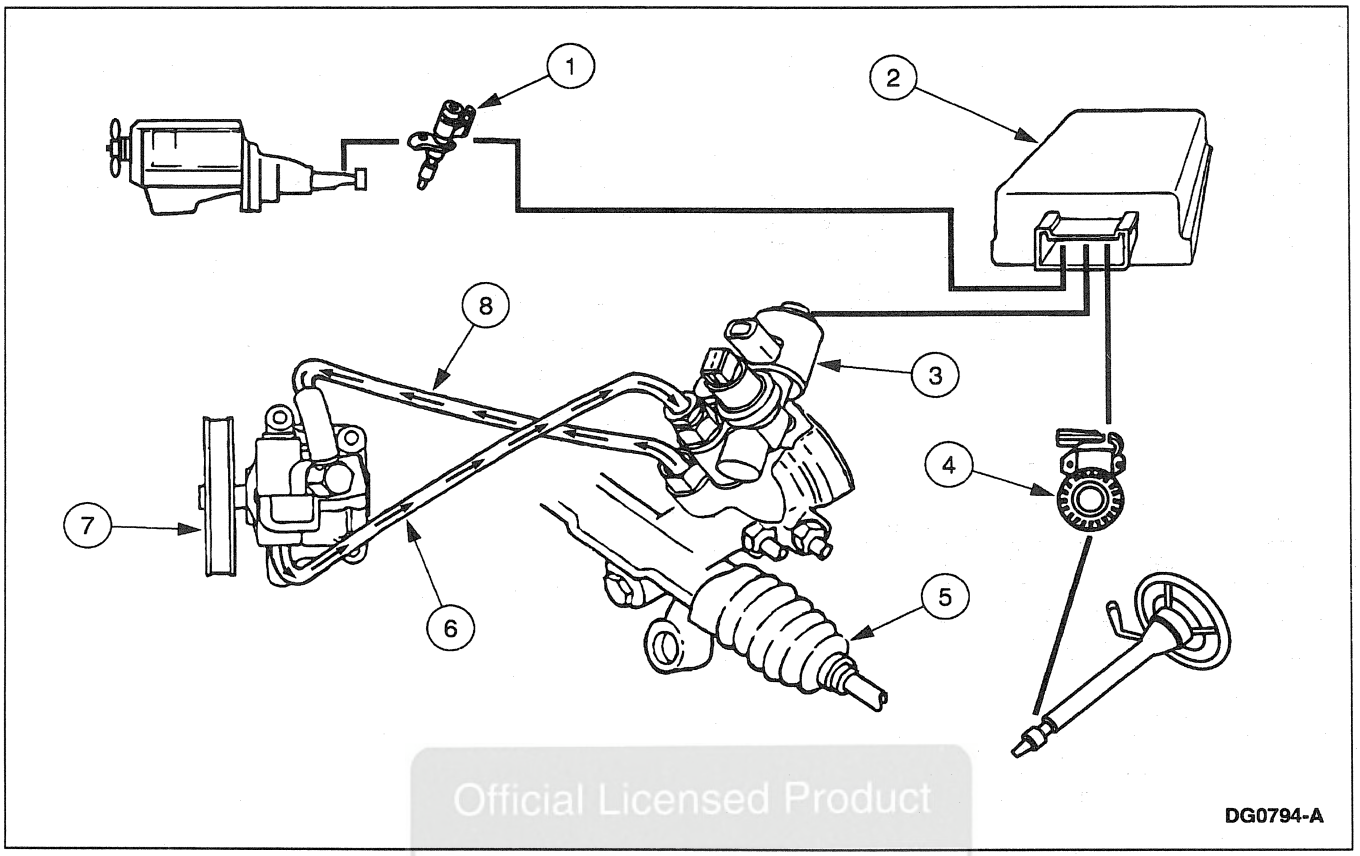

Official Licensed Product
Ford Motor Company

Item	Part Number	Description
1	9E731	Vehicle Speed Sensor
2	5A919	Control Module
3	3N803	Power Steering Auxiliary Actuator
4	18B015	Steering Wheel Rotation Sensor

Item	Part Number	Description
5	3504	Steering Gear
6	3A719	Power Steering Pressure Hose
7	3A674	Power Steering Pump
8	3A713	Power Steering Return Hose

(Continued)

Power Steering Gear Identification

⚠ CAUTION: Always use the ID code when ordering service parts.

The steering gear identification code is stamped into the housing.

DESCRIPTION AND OPERATION (Continued)

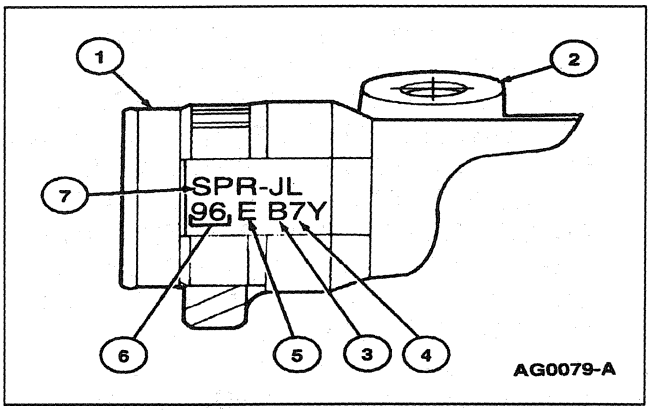

Item	Part Number	Description
1	—	Steering Gear Housing
2	—	Mounting Boss
3	—	Shift Code
4	—	Day Code
5	—	Month Code
6	—	Build Year
7	—	Steering Gear Model Code

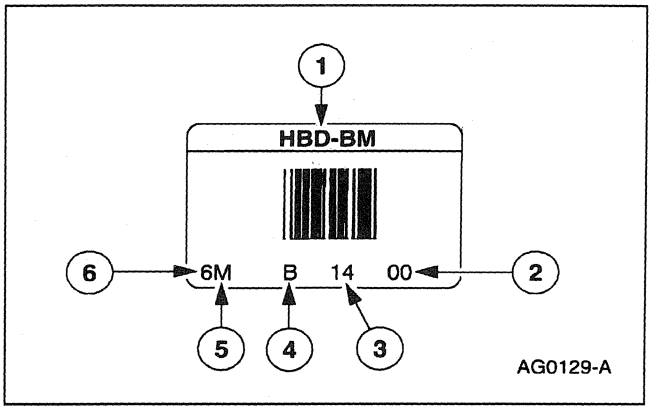

Item	Part Number	Description
1	—	Model Code
2	—	For Manufacturing Purposes Only
3	—	Day of the Month
4	—	Shift
5	—	Month (A = Jan., B = Feb., etc.; I Not Used)
6	—	Year

Pump Identification

⚠ CAUTION: Always use the ID code when ordering service parts.

The pump identification code is located on a tag attached to the power steering pump.

Official Licensed Product
Ford Motor Company

DIAGNOSIS AND TESTING

Power Steering

Refer to Section 211-00.

REMOVAL AND INSTALLATION

Pump

Removal

1. Remove the drive belt; refer to Section 303-05.

REMOVAL AND INSTALLATION (Continued)

2. **WARNING: THE ELECTRICAL POWER TO THE AIR SUSPENSION SYSTEM MUST BE SHUT OFF PRIOR TO HOISTING, JACKING OR TOWING AN AIR SUSPENSION VEHICLE. THIS CAN BE ACCOMPLISHED BY TURNING OFF THE AIR SUSPENSION SWITCH LOCATED IN THE LH LUGGAGE COMPARTMENT AREA. FAILURE TO DO SO CAN RESULT IN UNEXPECTED INFLATION OR DEFLATION OF THE AIR SPRINGS, WHICH CAN RESULT IN SHIFTING OF THE VEHICLE DURING THESE OPERATIONS.**

   Raise and support the vehicle; refer to Section 100-02.

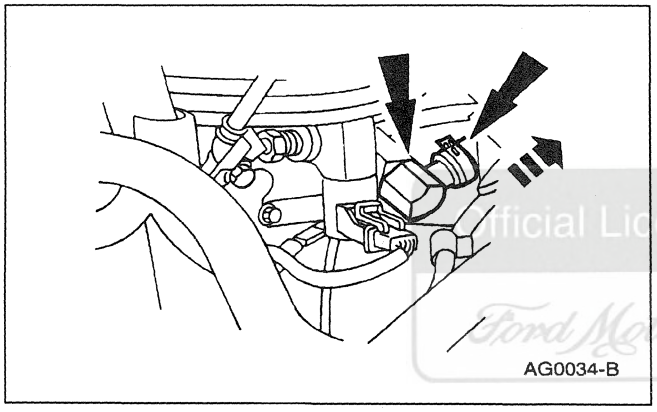

3. Disconnect the power steering reservoir pump hose (3691) from the power steering pump (3A674). Drain the power steering pump reservoir (3E764) .

Official Licensed Product
Ford Motor Company

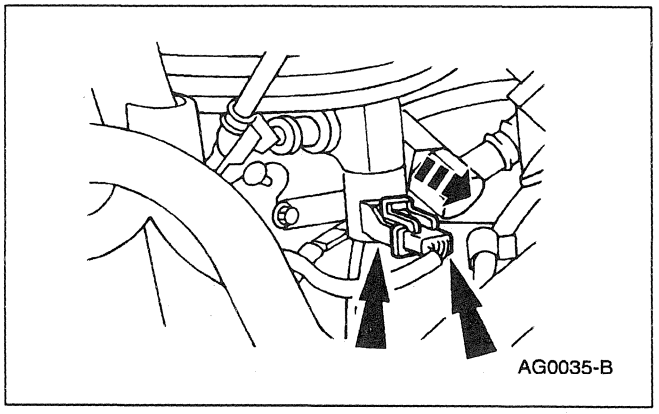

4. Disconnect the electrical connector from the power steering control valve actuator (3783) .

REMOVAL AND INSTALLATION (Continued)

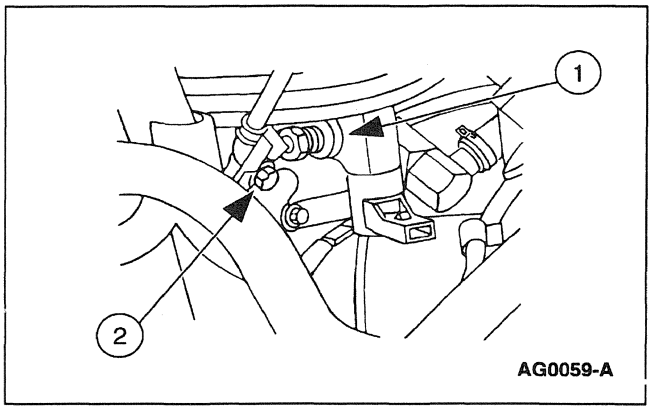

5. Disconnect the power steering pressure hose.
   1 Disconnect the power steering pressure hose from the power steering pump .
   2 Remove the pressure hose bracket-to-pump bolt and position the hose out of the way.

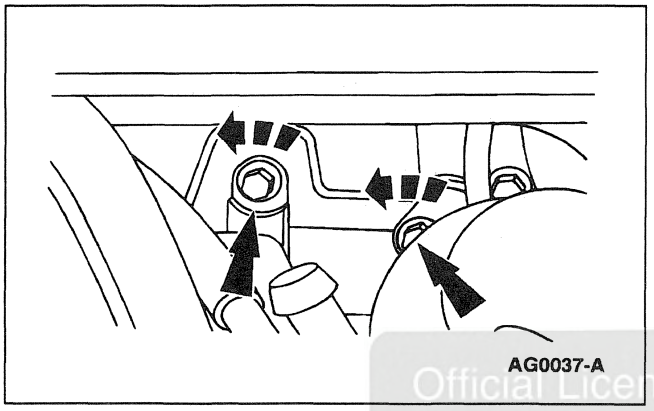

6. Working through the LF wheel opening, remove the two top power steering pump bolts.

Official Licensed Product
Ford Motor Company

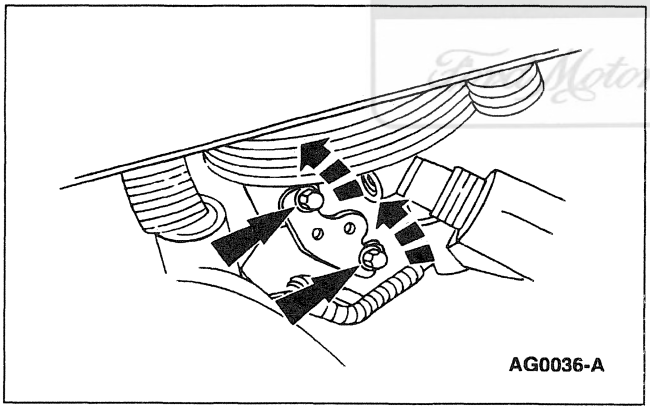

7. Working from below the vehicle, remove the two lower power steering pump bolts. Remove the power steering pump from the vehicle.

Installation

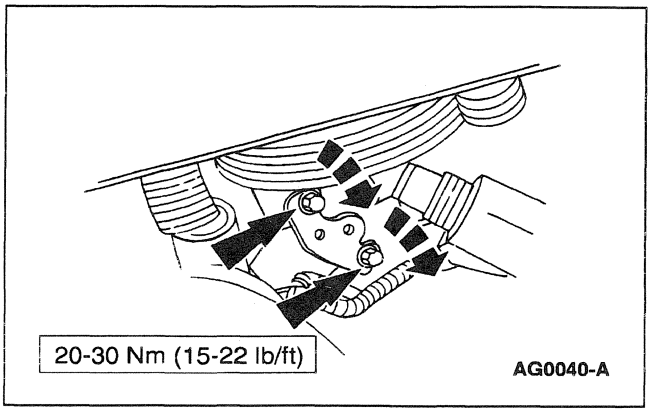

1. Position the power steering pump on the engine block, and install the two lower mounting bolts.

REMOVAL AND INSTALLATION (Continued)

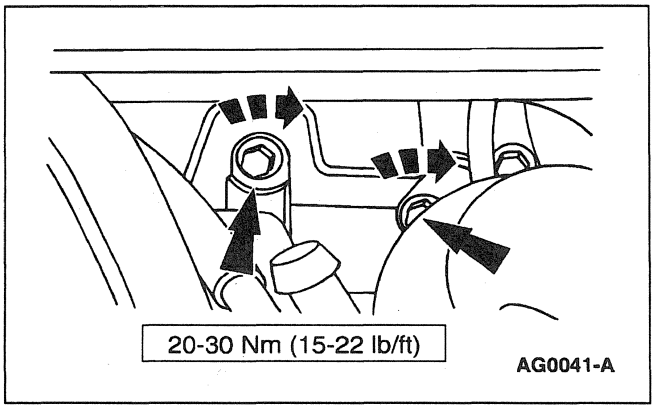

2. Install the two upper pump mounting bolts.

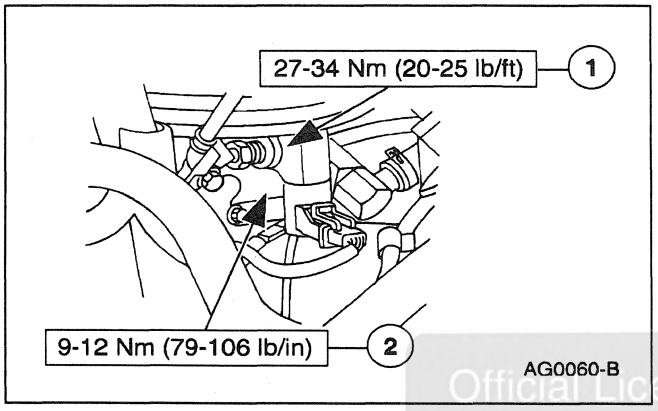

3. Connect the pressure hose.
   1 Install a new seal on the hose fitting, and connect the pressure hose to the power steering pump .
   2 Install the pressure hose bracket to pump retaining bolt.

Official Licensed Product
Ford Motor Company

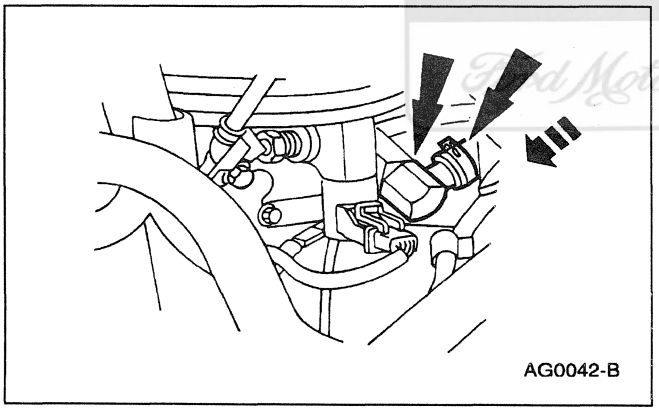

4. Connect the power steering reservoir pump hose.

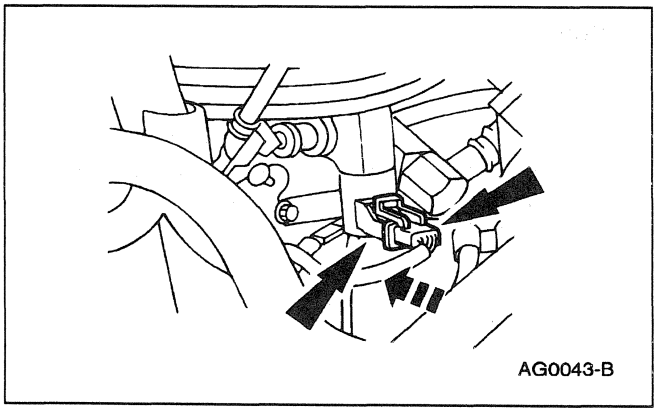

5. Connect the electrical connector to the power steering control valve actuator .

6. Lower the vehicle.

REMOVAL AND INSTALLATION (Continued)

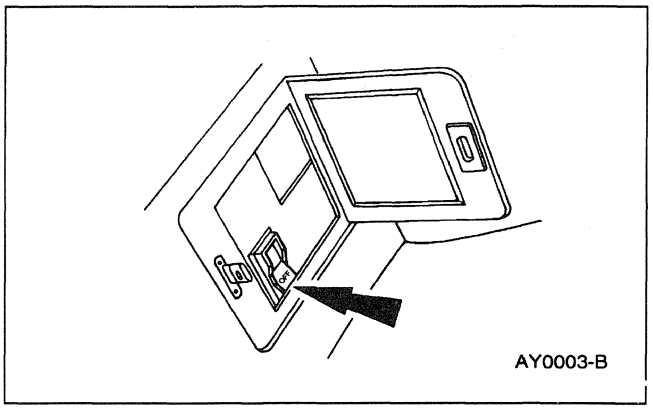

7. Turn the air suspension switch ON.

8. Install the drive belt; refer to Section 303-05.

9. Fill and leak check the system; refer to Section 211-00.

Pulley — Pump

Special Tool(s)

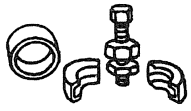	Steering Pump Pulley Remover 211-016 (T69L-10300-B)
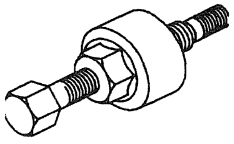 ST1586-A	Steering Pump Pulley Replacer 211-185 (T91P-3A733-A)

Official Licensed Product
Ford Motor Company

Removal

1. Remove the power steering pump (3A674) ; refer to Pump in this section.

REMOVAL AND INSTALLATION (Continued)

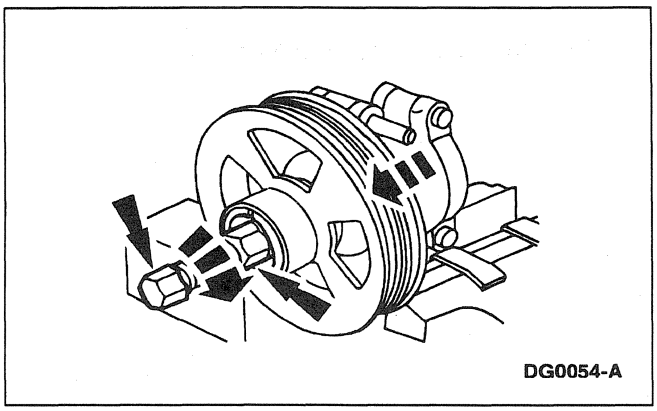
DG0054-A

2. Hold the Steering Pump Pulley Remover and rotate the forcing bolt to remove the power steering pump pulley.

Installation

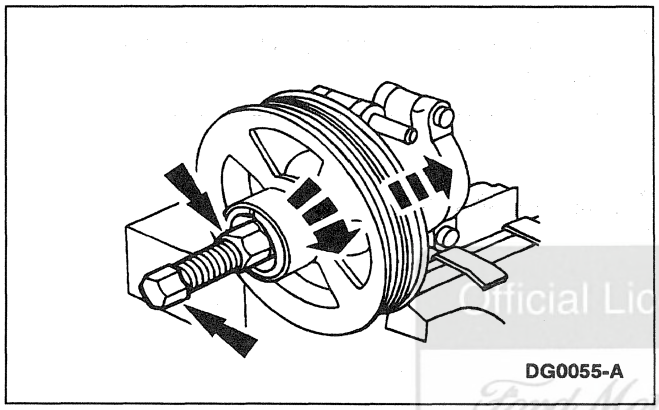
DG0055-A

1. Thread the forcing bolt into the power steering pump and turn the Steering Pump Pulley Replacer to install the pump pulley.

Official Licensed Product
Ford Motor Company

2. Install the power steering pump ; refer to Pump in this section.

Hose

Special Tool(s)

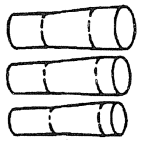 ST1444-A	Teflon Seal Replacer Set 211-D027 (D90P-3517-A) or Equivalent

Removal

1. Refer to the System View illustration in Description and Operation for the hose routing and retention points.

REMOVAL AND INSTALLATION (Continued)

Installation

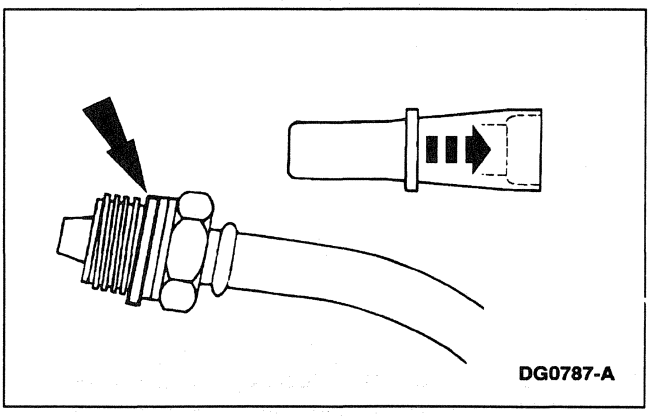

1. When connecting a fitting with a seal ring, the ring must be replaced.
   - The Seal Replacer is used to install the return line connector seal and the pressure line connector seal.

2. Fill and leak check the system; refer to Section 211-00.

Gear

Removal

Official Licensed Product
Ford Motor Company

1. **WARNING: THE ELECTRICAL POWER TO THE AIR SUSPENSION SYSTEM MUST BE SHUT OFF PRIOR TO HOISTING, JACKING OR TOWING AN AIR SUSPENSION VEHICLE. THIS CAN BE ACCOMPLISHED BY TURNING OFF THE AIR SUSPENSION SWITCH LOCATED IN THE LH LUGGAGE COMPARTMENT AREA. FAILURE TO DO SO CAN RESULT IN UNEXPECTED INFLATION OR DEFLATION OF THE AIR SPRINGS, WHICH CAN RESULT IN SHIFTING OF THE VEHICLE DURING THESE OPERATIONS.**

   Raise the vehicle on a hoist; refer to Section 100-02.

2. Disconnect both tie rod ends (3A130) from the front wheel knuckles.

3. Remove the engine oil filter.

REMOVAL AND INSTALLATION (Continued)

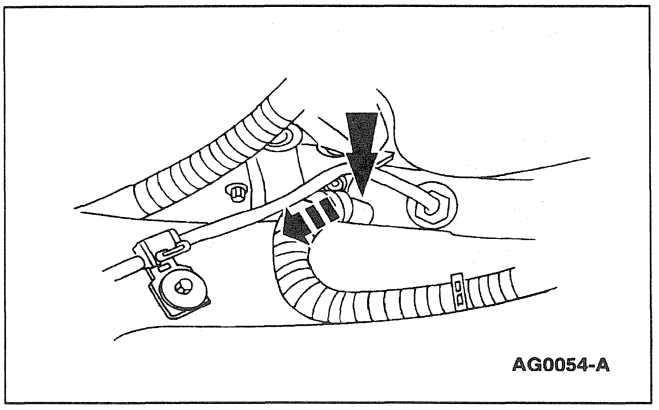

4. Disconnect and plug the power steering return hose (3A713) at the intermediate fitting.

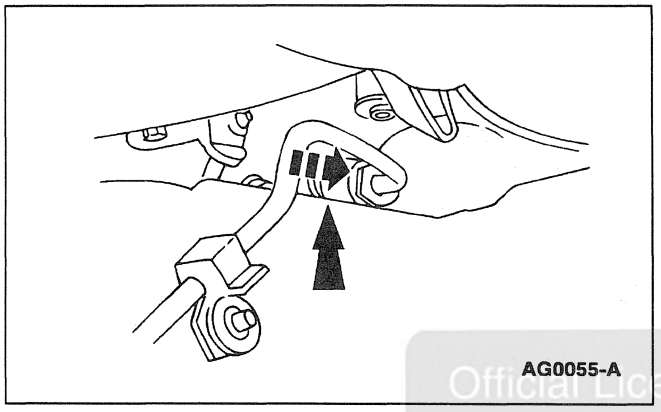

5. Disconnect the power steering pressure hose (3A719) at the intermediate fitting, and position out of the way.

Official Licensed Product
Ford Motor Company

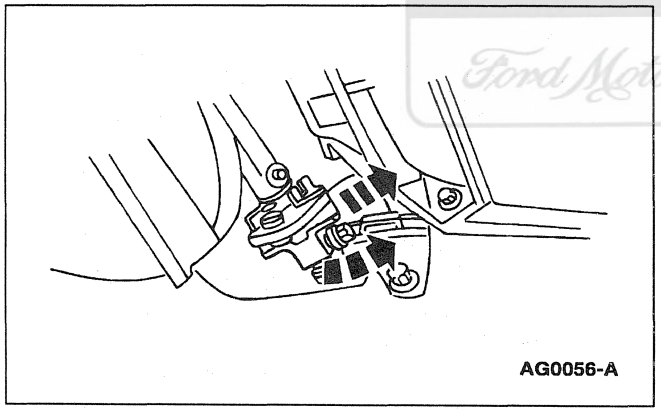

6. Remove the steering shaft retaining bolt.

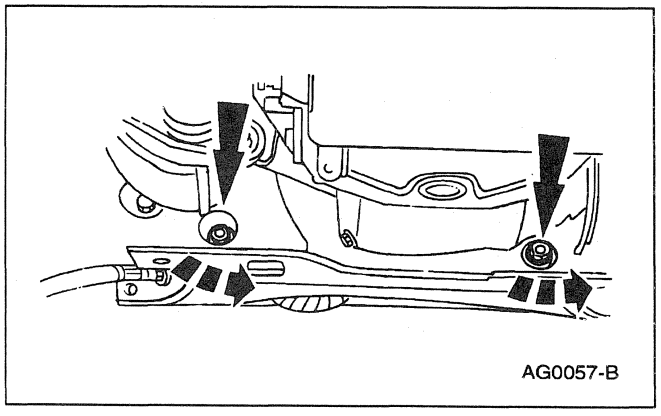

7. **NOTE:** Retaining bolts stay with the rack.

   Working through the access holes in the subframe, remove the nuts from the rack-to-subframe bolts.

REMOVAL AND INSTALLATION (Continued)

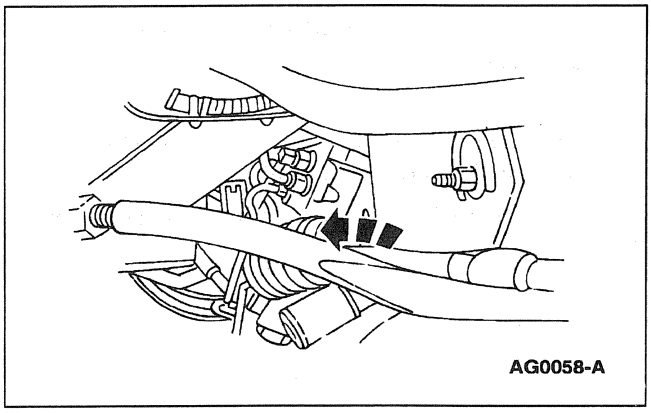

8. Rotating top of rack forward, remove the rack from the subframe.

Installation

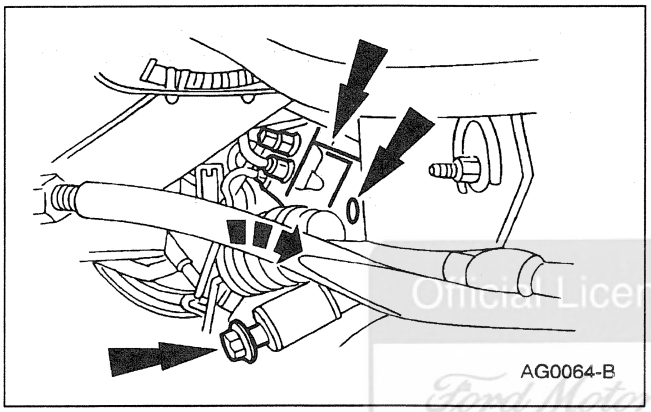

1. With the bolts in the steering gear housing, using rotating motion, mount the rack and pinion steering gear on the subframe.

Official Licensed Product
Ford Motor Company

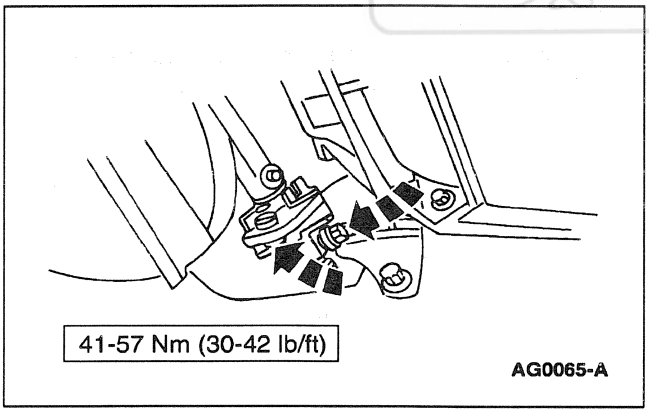

2. Align the steering shaft coupling with the stub shaft on the rack and pinion steering gear and install the retaining bolt.

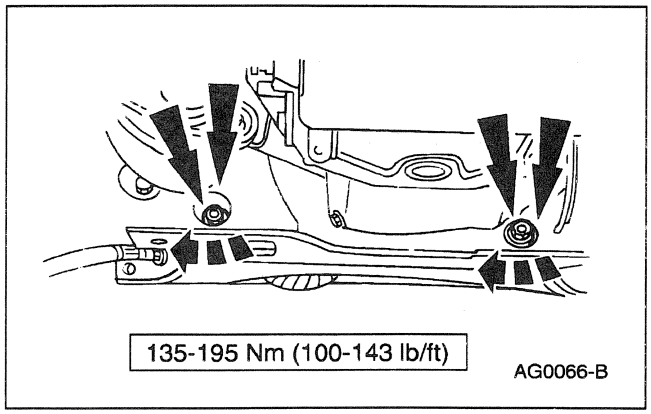

3. Working through the access holes in the subframe, install the rack to subframe retaining nuts.

REMOVAL AND INSTALLATION (Continued)

4. Connect both tie rod ends to the front wheel spindles.

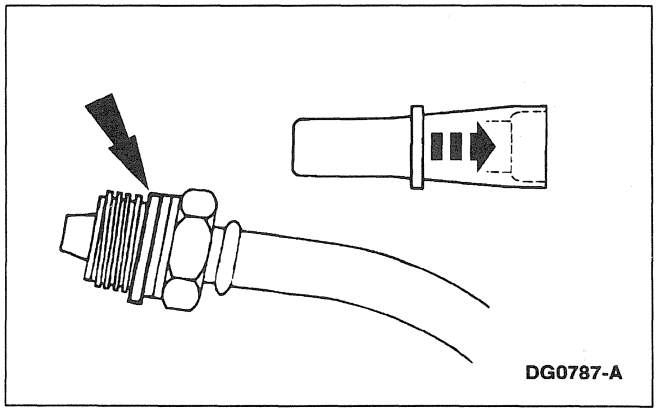

5. Replace the return line connector seal and the pressure line connector seal.
   - Use the Seal Replacer to install the seals over the fittings.

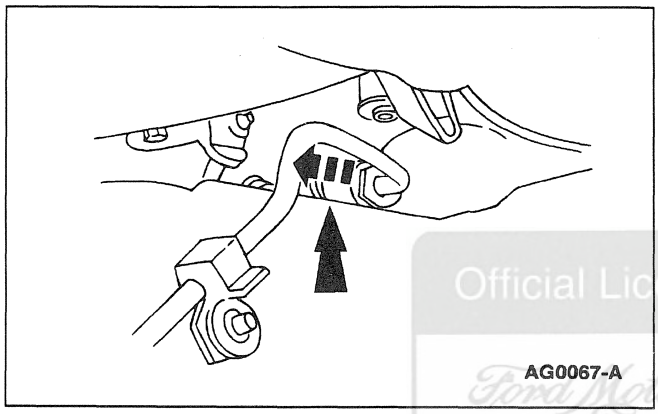

6. Connect the power steering pressure hose at the intermediate fitting.

Official Licensed Product
Ford Motor Company

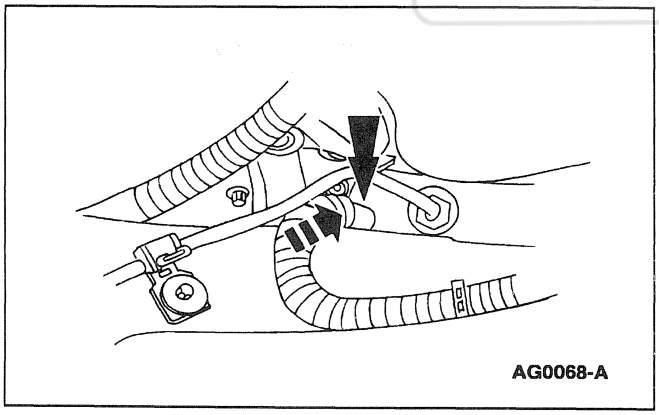

7. Connect the power steering return hose at the intermediate fitting.

8. Install the engine oil filter.

9. Lower the vehicle.

REMOVAL AND INSTALLATION (Continued)

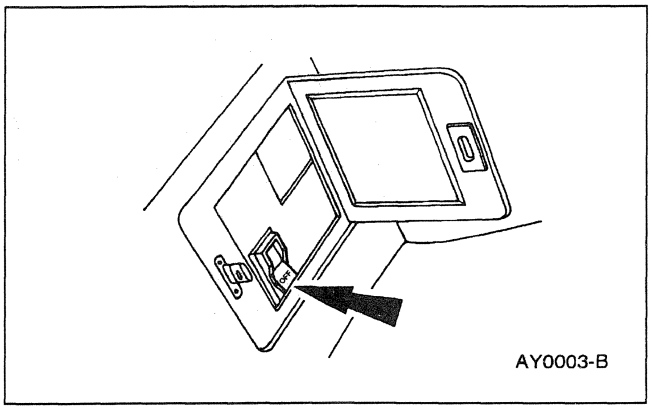

10. Turn the air suspension switch ON.

11. Fill and leak check the system; refer to Section 211-00.

12. Fill the engine to the specified level.

13. Check and adjust front end alignment; refer to Section 204-00.

Official Licensed Product
Ford Motor Company

Module

Removal

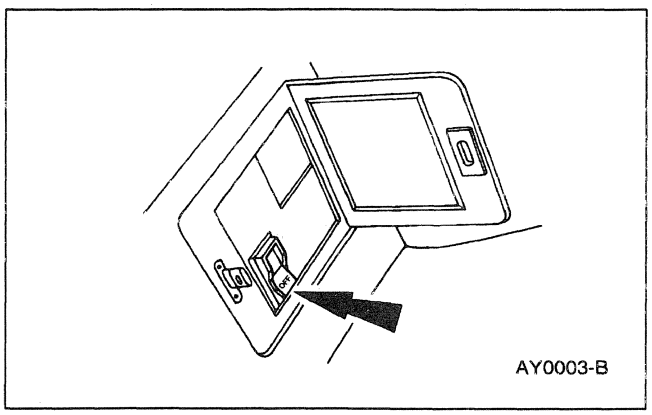

1. Turn the ignition switch to the OFF or LOCK position.

2. Turn the air suspension switch (located in luggage compartment) OFF.

3. Remove the glove compartment; refer to Section 501-12.

REMOVAL AND INSTALLATION (Continued)

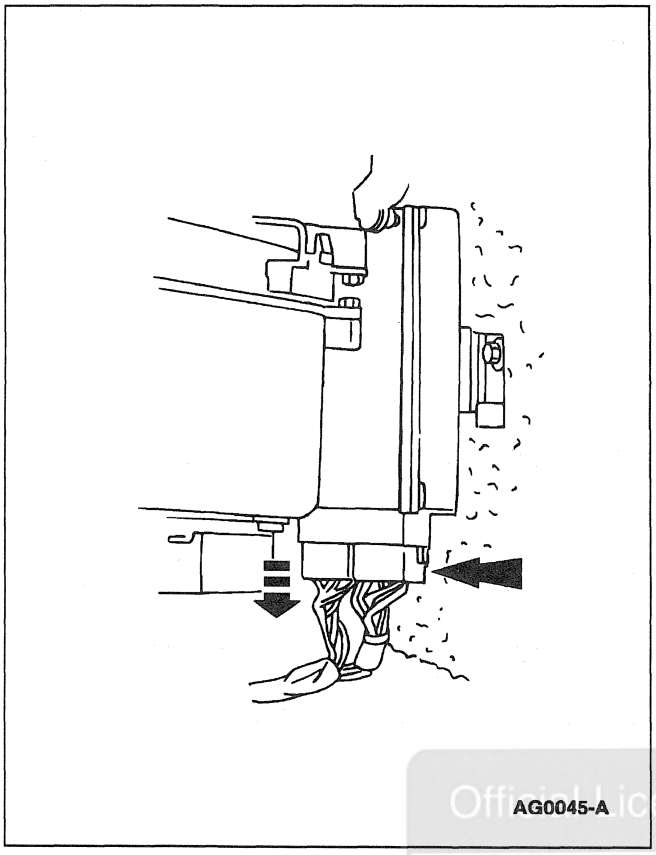

4. Disconnect the wire harness from the EVO control module.

Official Licensed Product
Ford Motor Company

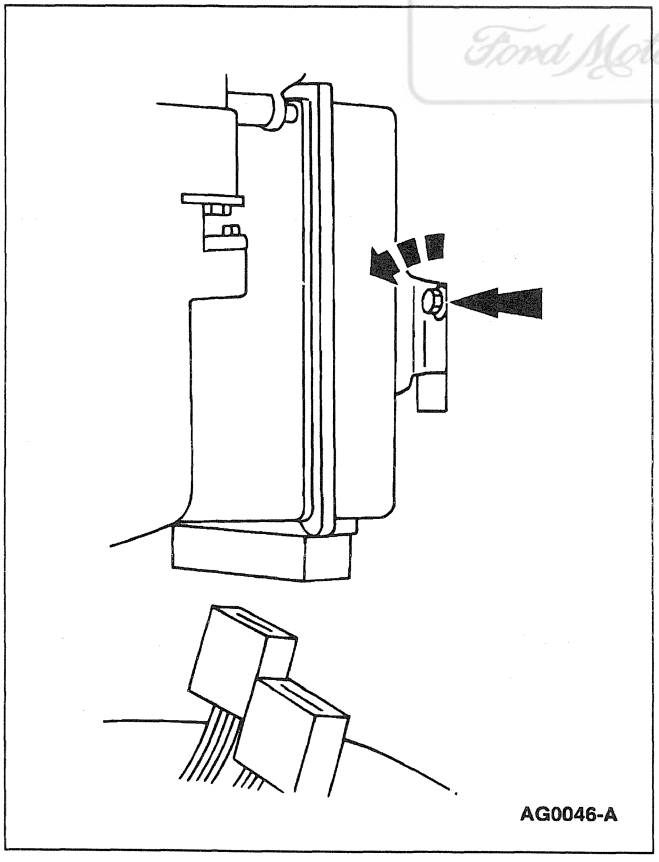

5. Remove the module-to-cowl retaining bolt, and remove the module.

REMOVAL AND INSTALLATION (Continued)

Installation

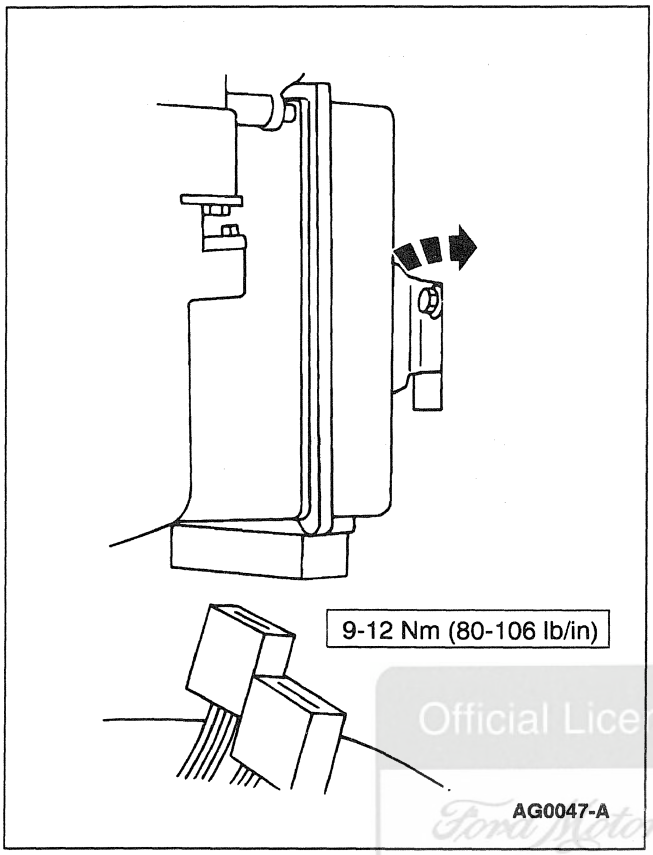

1. Follow the removal procedure in reverse order.

Official Licensed Product
Ford Motor Company

Control Valve Actuator

Removal

1. **WARNING: THE ELECTRICAL POWER TO THE AIR SUSPENSION SYSTEM MUST BE SHUT OFF PRIOR TO HOISTING, JACKING OR TOWING AN AIR SUSPENSION VEHICLE. THIS CAN BE ACCOMPLISHED BY TURNING OFF THE AIR SUSPENSION SWITCH LOCATED IN THE LH LUGGAGE COMPARTMENT AREA. FAILURE TO DO SO CAN RESULT IN UNEXPECTED INFLATION OR DEFLATION OF THE AIR SPRINGS, WHICH CAN RESULT IN SHIFTING OF THE VEHICLE DURING THESE OPERATIONS.**

   Raise the vehicle; refer to Section 100-02.

REMOVAL AND INSTALLATION (Continued)

2. Remove the engine oil filter.

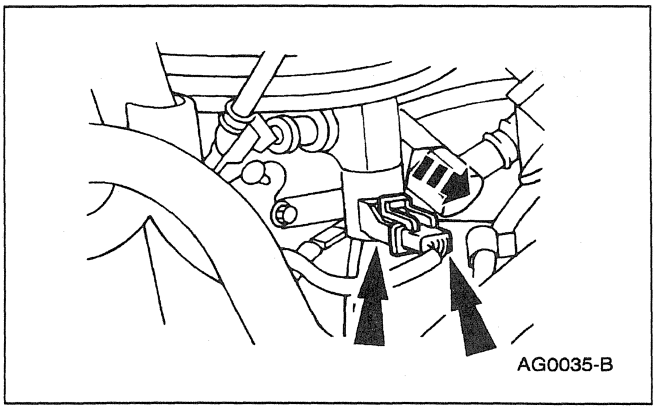

3. Disconnect the electrical connector from the power steering control valve actuator (3783) .

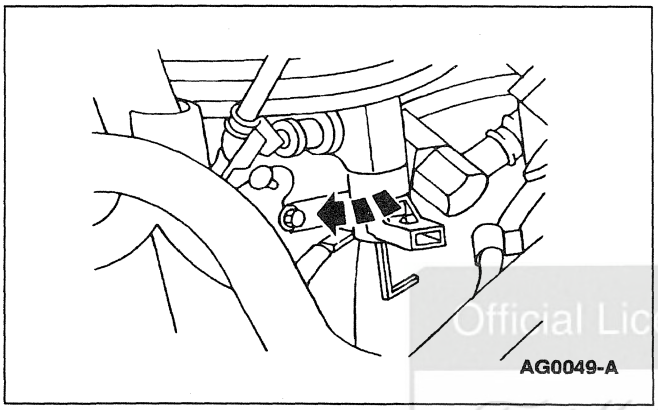

4. Remove the actuator from the back side of the power steering control valve actuator , using a 6 mm allen hex wrench.

Official Licensed Product
Ford Motor Company

Installation

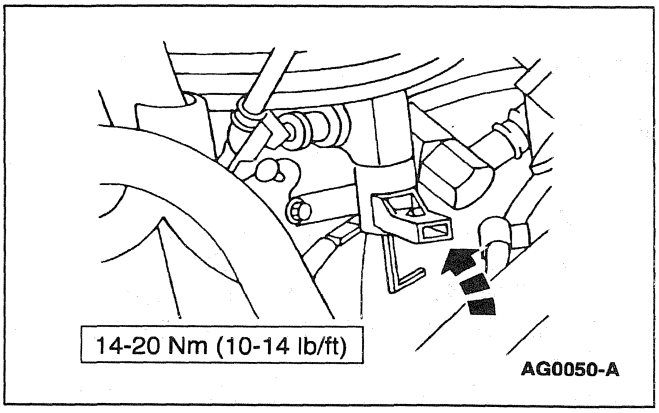

1. Follow the removal procedure in reverse order.

2. Fill and leak test the system; refer to Section 211-00.

3. Add oil to the engine, as necessary.

REMOVAL AND INSTALLATION (Continued)

Steering Sensor

Removal

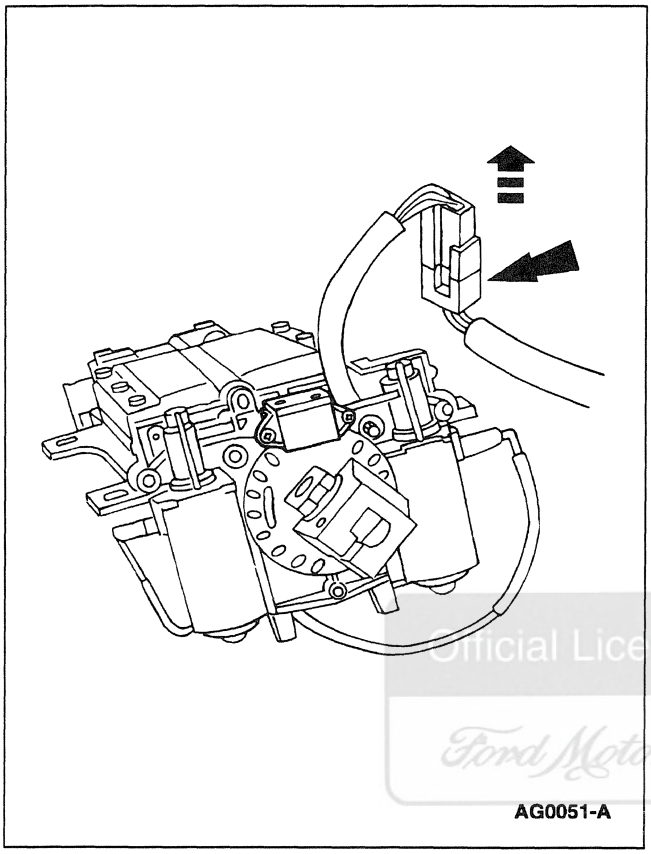

1. Working inside the vehicle, under the dash panel in the driver compartment at the bottom of the steering column, disconnect the electrical connector from the shock absorber electronic steering sensor (18B015) .

Official Licensed Product
Ford Motor Company

REMOVAL AND INSTALLATION (Continued)

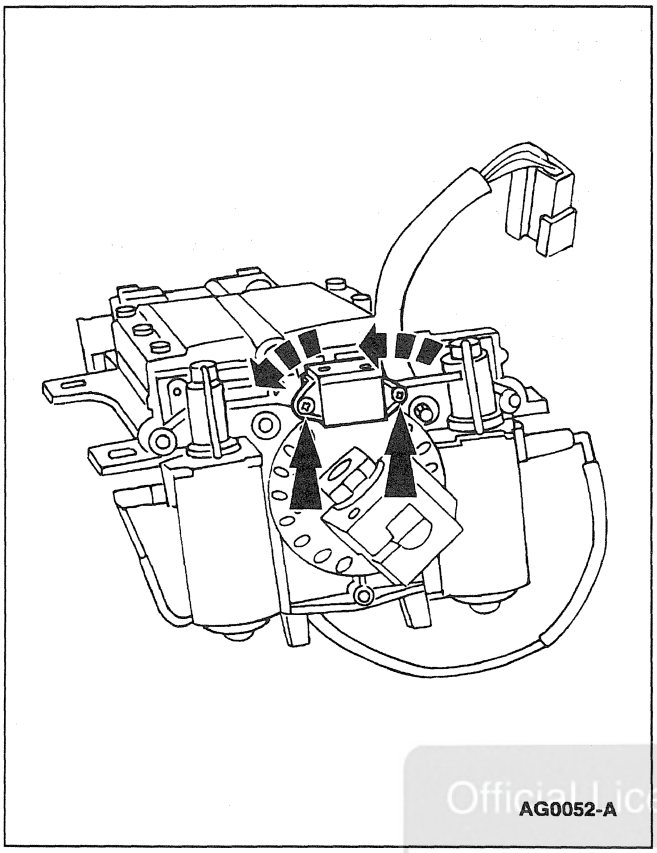

2. Remove the two sensor-to-steering column retaining screws. Remove the shock absorber electronic steering sensor .

Official Licensed Product
Ford Motor Company

REMOVAL AND INSTALLATION (Continued)

Installation

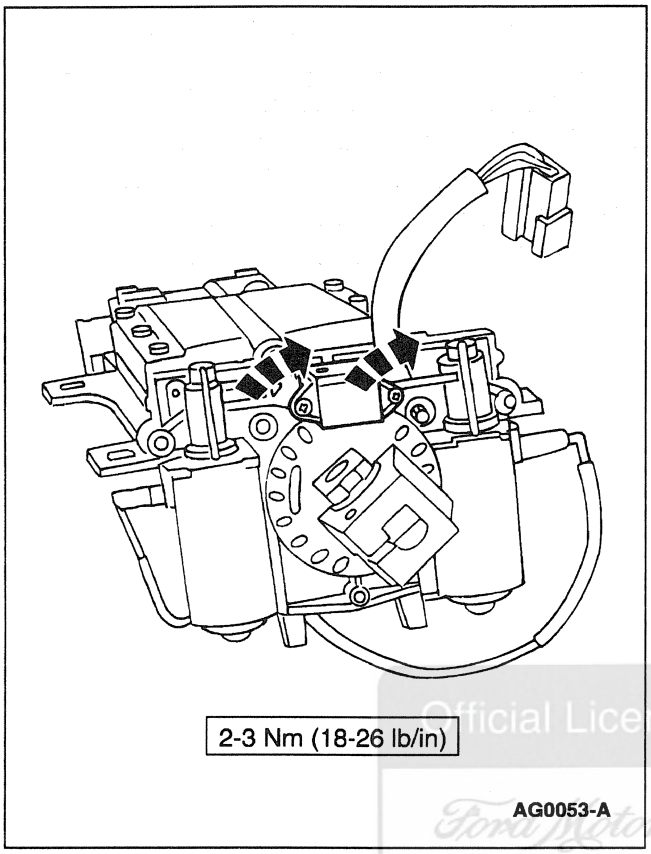

1. Follow the removal procedure in reverse order.

Official Licensed Product
Ford Motor Company

SPECIFICATIONS

General Specifications

Item	Specification
Gear Ratio	17.25:1 Center Position
Number of Turns	3.23
Power Steering Fluid Capacity (Including Steering Pump)	1.13L (2.4 Pints)
MERCON® Multi-Purpose ATF XT-2-QDX	MERCON®
Pinion Torque (Power Cylinder drained and Gear removed from vehicle)	0.45-2.71 Nm (4-24 Lb/In)
Tie Rod Articulation Effort	0.7-12.5 Nm (6.18-110 Lb/In)
Lubricants	
Premium Power Steering Fluid E6AZ-19582-AA	ESW-M2C33-F

Torque Specifications

Description	Nm	Lb/Ft	Lb/In
Pressure Hose Fitting (At Pump)	57-73	42-53	—
Pressure Line Intermediate Fitting	13.6-20.3	10-15	—
Clamp Retaining Screw (Lower Radiator Support)	19.1-25.9	14-19	—
Clamp Retaining Bolt (Power Steering Pump)	9-12	—	79-106
Power Rack and Pinion Steering Gear-to-Crossmember Mounting Bolt and Nut	135-195	100-143	—
Tie Rod End-to-Spindle Arm Nut	53-72	42-53	—

(Continued)

SPECIFICATIONS (Continued)

Torque Specifications

Description	Nm	Lb/Ft	Lb/In
Tie Rod End-to-Tie Rod Jam Nut	47-63	35-46	—
Steering Shaft Retaining Bolt	41-57	30-42	—
Bellows Clamp Screw	2.3-3.4	—	20-30
Hose Fittings at Gear	27-34	20-25	—
Front Wheel Spindle Tie Rod to Rack	90-110	66-81	—
Wheel Lug Nuts	115-142	85-104	—

(Continued)

Torque Specifications

Description	Nm	Lb/Ft	Lb/In
Power Steering Pump Bolts	20-30	15-22	—
EVO Actuator to Pump	14-20	10-14	—
Return Hose Clamp	1.4-2.0	—	12-17
Steering Sensor Screws	2-3	—	18-26
Reservoir Screws/Nut	8.9-12.1	79-107	—
Vehicle Speed Sensor	7-10	—	62-88

Official Licensed Product
Ford Motor Company

SECTION 211-04 Steering Column

VEHICLE APPLICATION: Mark VIII

SUBJECT	PAGE
DESCRIPTION AND OPERATION	
Steering Column	211-04-2
Ignition Switch	211-04-3
DIAGNOSIS AND TESTING	
Steering Column	211-04-3
Steering Column — Tilt/Telescope Motor	211-04-3
Inspection and Verification	211-04-3
Pinpoint Tests	211-04-5
Symptom Chart	211-04-4
REMOVAL AND INSTALLATION	
Air Bag Sliding Contact	211-04-70
Column	211-04-70
Ignition Switch Lock Cylinder	211-04-63
Tilt/Telescope Motors	211-04-75
Wheel	211-04-67
DISASSEMBLY AND ASSEMBLY	
Steering Column	211-04-77
SPECIFICATIONS	211-04-86

Official Licensed Product
Ford Motor Company

DESCRIPTION AND OPERATION

Steering Column

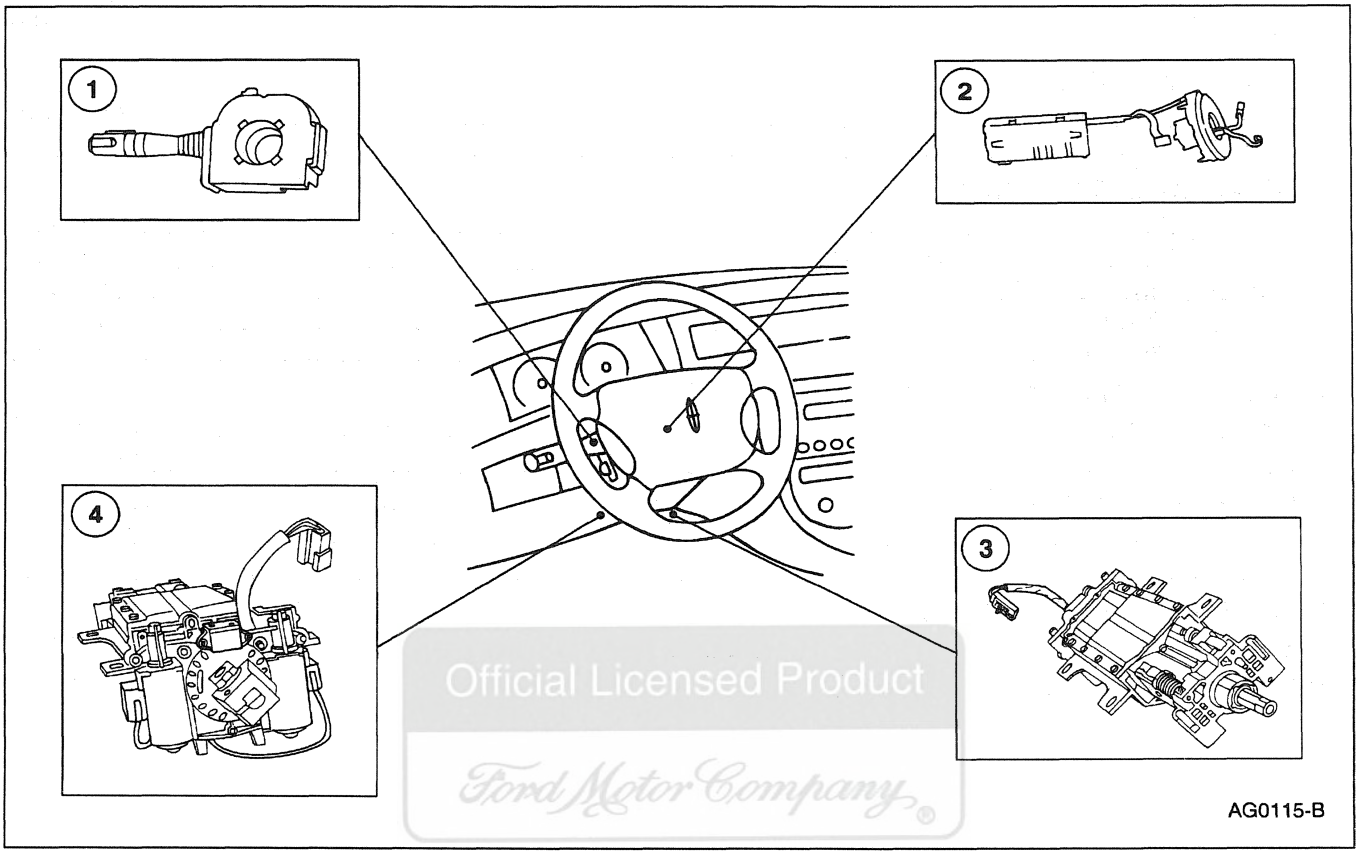

Official Licensed Product
Ford Motor Company

Item	Part Number	Description
1	13K359	Multi-Function Switch
2	14A664	Air Bag Sliding Contact

(Continued)

Item	Part Number	Description
3	—	Steering Column
4	3D538	Tilt and Telescope Motors

NOTE: All fasteners are important in that they can affect the performance of vital parts and systems, and can result in major service expenses. They must be replaced with fasteners of the same part number if replacement becomes necessary. Do not use a replacement part of lesser quality or substitute design. Torque values must be used as specified during assembly to ensure proper functioning of these parts.

The steering column:

- is of modular construction.
- features easy to service electrical switches.

The Mark VIII is not equipped with a fixed steering column.

- Tilt steering columns are equipped with an electric tilt and telescopic mechanism that allows the steering wheel angle length to be adjusted to suit the driver. The steering wheel position is stored in memory in the same way as the drivers seat position and retrieved as a personality feature. The steering column is controlled by the steering column/ignition/lighting control module.

DESCRIPTION AND OPERATION (Continued)

Steering columns have steering wheels (3600) which are bolted to the top of the steering column and are fitted with a supplemental air bag system driver side air bag module (043B13) . Before performing work on or around any supplemental air bag system component, observe all supplemental air bag system conditions and warnings to avoid unnecessary air bag deployment and possible injury. Refer to Section 501-20B for supplemental air bag system.

Ignition Switch

The ignition lock cylinder and switch are two components. When the lock cylinder ignition key is turned to different positions, it is aligning electrical contacts in the ignition switch. Electrical contacts are made in the ACC (Accessory), RUN and START positions. In the OFF position the switch is open and the key can be removed.

The ignition switch and lock cylinder assembly is mounted to the right of the steering column in the instrument panel. An opening in the instrument panel provides key access to the lock cylinder.

DIAGNOSIS AND TESTING

Steering Column

Refer to Section 211-00.

Steering Column — Tilt/Telescope Motor

Refer to Electrical and Vacuum Troubleshooting Manual, Cell 58, Lighting Control Module for schematic and connector information.

Refer to Electrical and Vacuum Troubleshooting Manual, Cell 77, Tilt/Telescoping Steering Column for schematic and connector information.

Special Tool(s)

ST1137-A	73 Digital Multimeter 105-R0051 or Equivalent
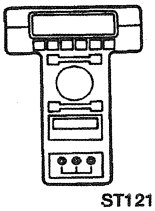 ST1217-A	New Generation Star (NGS) Tester 007-00500 or Equivalent

Inspection and Verification

1. Verify the customer's concern by operating the steering column switch to duplicate the condition.
2. Inspect to determine if one of the following apply:

Visual Inspection Chart

Mechanical	Electrical
• Damaged steering column	• Damaged fuse power distribution box Fuse 12 (15A). Fuse junction panel Fuse 5 (10A) • Damaged multi-function switch • Circuitry open/shorted

3. If inspection reveals obvious concern(s) that can be readily identified, repair as required.
4. If the concern remains after the inspection, connect New Generation Star (NGS) Tester to the data link connector (DLC) located beneath the instrument panel to perform DATA LINK DIAGNOSTIC TEST; refer to Section 418-00. If the New Generation Star (NGS) Tester responds with NO RESPONSE/NOT EQUIPPED for steering column/ignition/lighting control module, go to Pinpoint Test B. If the DATA LINK DIAGNOSTIC TEST is passed for the steering column/ignition/lighting control module, retrieve continuous diagnostic trouble codes (DTCs) and execute Self Test Diagnostics for the steering column/ignition/lighting control module; refer to Section 418-00.
5. If the self test is passed and no diagnostic trouble codes (DTCs) are retrieved, go to Symptom Chart to continue diagnostics.
6. If diagnostic trouble codes (DTCs) are retrieved, go to the Steering Column/Ignition/Lighting Control Module Diagnostic Trouble Code (DTC) Index to continue diagnostics.

Covered Licensed Product Ford Motor Company

DIAGNOSIS AND TESTING (Continued)

7. If the Steering Column/Ignition/Lighting Control Module cannot be accessed by the New Generation Star (NGS) Tester, go to Pinpoint Test B.

Steering Column/Ignition/Lighting Control (SCIL) Module Diagnostic Trouble Code (DTC) Index

DTC	Description	DTC caused by	Action to Take
B1353	Ignition Key-In Circuit Open	SCIL Module	REFER to Section 501-12.
B1360	Ignition RUN/ACC Circuit Open	SCIL Module	REFER to Section 501-12.
B1364	Ignition START Circuit Open	SCIL Module	REFER to Section 501-12.
B2328	Steering Column Telescope Feedback Potentiometer Circuit Failure	SCIL Module	REFER to DTC B2328.
B2332	Steering Column Tilt Feedback Potentiometer Circuit Failure	SCIL Module	REFER to DTC B2332.
B2351	Steering Column Switch Signal Circuit Failure	SCIL Module	REFER to DTC B2351.

Steering Column/Ignition/Lighting Control (SCIL) Module Parameter Identification (PID) Index

PID	Description	PID Value
CCNT5CI	Number of Continuous DTCs on SCIL	One count per bit
IGN__KEY	Ignition Key In/Out	IN OUT
IGN__SCI	Ignition Switch	START RUN OFF ACCSSY
NUMKEYS	Number of Ignition Key Codes Supported	BCD (Valid Range 0-16)
PRK__BRK	Parking Brake Switch Input	ON OFF
TILT	Steering Column Tilt Switch	SHORT UP DOWN OFF
TELESCP	Steering Column Telescope Switch	SHORT IN OUT OFF
TILTPOS	Tilt Position Sensor	SENSED notSEN
TELEPOS	Telescope Position Sensor	SENSED notSEN

Steering Column/Ignition/Lighting (SCIL) Control Module Active Command Index

Active Command	Display	Function
Steering Column Control	TILT UP	ONE SECOND TIME OUT
	TILT DOWN	ONE SECOND TIME OUT
	TELSCP IN	ONE SECOND TIME OUT
	TELSCPOUT	ONE SECOND TIME OUT
Keycode Erase Time Set	MINUTES	8-63 MINUTES

Symptom Chart

Refer to the Electrical and Vacuum Troubleshooting Manual for connector numbers cited in the pinpoint tests.

DIAGNOSIS AND TESTING (Continued)

Symptom Chart

Condition	Possible Source	Action
• No Communication with the Steering Column/Ignition/Lighting Control Module	• Steering column/ignition/lighting control module. • Circuitry.	• GO to Pinpoint Test B.
• The Steering Column Tilt Adjustment Is Inoperative	• Steering column/ignition/lighting control module. • Multi-function switch. • Circuitry.	• GO to Pinpoint Test C.
• The Steering Column Telescope Adjustment is Inoperative	• Steering column/ignition/lighting control module. • Multi-function switch. • Circuitry.	• GO to Pinpoint Test D.
• The Steering Column Tilt and Telescope Adjustment is Inoperative	• Steering column/ignition/lighting control module. • Multi-function switch. • Circuitry.	• GO to Pinpoint Test E.

Pinpoint Tests

DTC B2328: STEERING COLUMN REACH FEEDBACK POTENTIOMETER CIRCUIT FAILURE

TEST CONDITIONS	TEST DETAILS/RESULTS/ACTIONS
B2328-1 CHECK FOR DTC B2332	
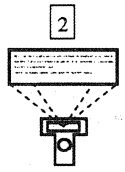 Steering Column/Ignition/Lighting Control Module Self-Test	1 Activate the steering column adjustment switch to full travel in all four directions. 3 Retrieve the continuous DTCs, and the self test DTCs. • Are both DTCs B2332 and B2328 present in the self test or continuous DTCs? → **Yes** GO to Pinpoint Test A. → **No** GO to **B2328-2**.

(Continued)

Official Licensed Reader Ford Motor Company

DIAGNOSIS AND TESTING (Continued)

DTC B2328: STEERING COLUMN REACH FEEDBACK POTENTIOMETER CIRCUIT FAILURE (Continued)

TEST CONDITIONS	TEST DETAILS/RESULTS/ACTIONS
B2328-2 CHECK CONTINUOUS DTCs	
1 Steering Column/Ignition/Lighting Control Module Continuous DTCs	• Is DTC B2328 present? → **Yes** GO to **B2328-3**. → **No** GO to **B2328-7**.
B2328-3 CHECK CIRCUIT 214 (PK/LB) FOR A SHORT TO B+	
1 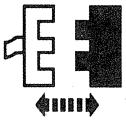 Steering Column/Ignition/Lighting Control Module Connector C286 2 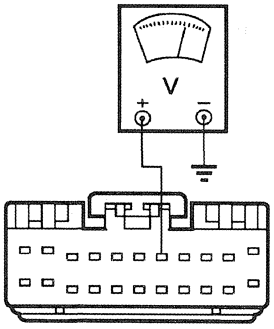 AG0176-A	2 Connect a voltmeter to the steering column/ignition/lighting control module connector Pin C286-7, Circuit 214 (PK/LB). • Is voltage present? → **Yes** SERVICE Circuit 214 (PK/LB) for a short to B+. RETEST the system. → **No** GO to **B2328-4**.

Official Licensed Product
Ford Motor Company

(Continued)

DIAGNOSIS AND TESTING (Continued)

DTC B2328: STEERING COLUMN REACH FEEDBACK POTENTIOMETER CIRCUIT FAILURE (Continued)

TEST CONDITIONS	TEST DETAILS/RESULTS/ACTIONS
B2328-4 CHECK CIRCUIT 214 (PK/LB) FOR A SHORT TO THE GROUND	
1 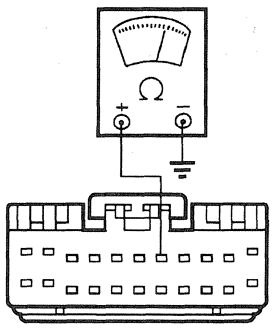 AG0177-A	1 Connect an ohmmeter between the steering column/ignition/lighting control module connector Pin C286-7, Circuit 214 (PK/LB) and the ground. • Is the resistance 10 K ohms or less? → **Yes** SERVICE Circuit 214 (PK/LB) for a short to the ground. RETEST the system. → **No** GO to **B2328-5**.
B2328-5 CHECK CIRCUIT 214 (PK/LB) FOR AN OPEN	
1 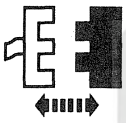 Steering Column/Tilt/Telescope Potentiometer Connector C216 2 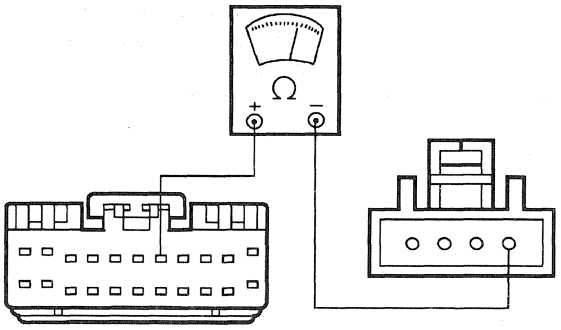 AG0178-A	2 Connect an ohmmeter between the steering column/ignition/lighting control module connector Pin C286-7 and the steering column/tilt/telescope potentiometer Connector C216, Circuit 214 (PK/LB). • Is the resistance 5 ohms or less? → **Yes** GO to **B2328-6**. → **No** SERVICE Circuit 214 (PK/LB) for an open. RETEST the system.

Official Licensed Product
Ford Motor Company

(Continued)

DIAGNOSIS AND TESTING (Continued)

DTC B2328: STEERING COLUMN REACH FEEDBACK POTENTIOMETER CIRCUIT FAILURE (Continued)

TEST CONDITIONS	TEST DETAILS/RESULTS/ACTIONS
B2328-6 CHECK THE POTENTIOMETERS	
1 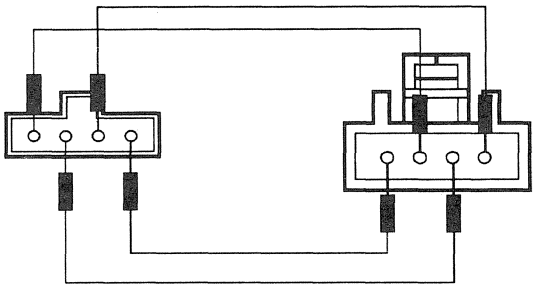 AG0154-A	1 Connect a jumper wire between the steering column tilt/telescope potentiometer Connector C216, Circuit 668 (PK/O) and the steering column tilt/telescope potentiometer terminal 1. 2 Connect a jumper wire between the steering column tilt/telescope potentiometer Connector C216, Circuit 669 (DG/W) and the steering column tilt/telescope potentiometer terminal 3. 3 Connect a jumper wire between the steering column tilt/telescope potentiometer Connector C216, Circuit 213 (DB/Y) and the steering column tilt/telescope potentiometer terminal 4. 4 Connect a jumper wire between the steering column tilt/telescope potentiometer Connector C216, Circuit 214 (PK/LB) and the steering column tilt/telescope potentiometer terminal 2.
5 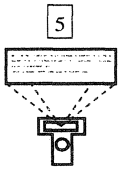 Steering Column/Ignition/Lighting Control Module Self-Test	• Is DTC B2332 retrieved? → **Yes** REPLACE the steering column tilt/telescope potentiometers. RETEST the system. → **No** REPLACE the steering column/ignition/lighting control module. RETEST the system.

Official Licensed Product
Ford Motor Company®

(Continued)

DIAGNOSIS AND TESTING (Continued)

DTC B2328: STEERING COLUMN REACH FEEDBACK POTENTIOMETER CIRCUIT FAILURE (Continued)

TEST CONDITIONS	TEST DETAILS/RESULTS/ACTIONS
B2328-7 CHECK FOR STEERING COLUMN MOVEMENT	
NOTE: This active command will only power motors for one second.	
1 Steering Column/Ignition/Lighting Control Module Active Command STEERING COLUMN CONTROL 2 Trigger TELESCP IN On Then TELSCPOUT On	• Does the steering column telescope in and out? → **Yes** REPLACE the steering column tilt/telescope potentiometers. RETEST the system. → **No** GO to **B2328-8**.
B2328-8 CHECK FOR VOLTAGE AT THE MOTOR	
1 Steering Column Motor Connector C297 2 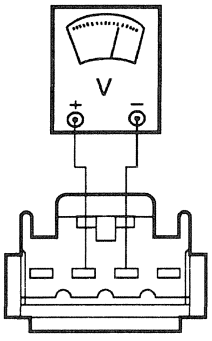 AG0179-A	2 Connect a voltmeter between the steering column motor connector Pin C297-3, Circuit 216 (T/R) and the Pin C297-2, Circuit 695 (BK/O).

Official Licensed Product
Ford Motor Company

(Continued)

DIAGNOSIS AND TESTING (Continued)

DTC B2328: STEERING COLUMN REACH FEEDBACK POTENTIOMETER CIRCUIT FAILURE (Continued)

TEST CONDITIONS	TEST DETAILS/RESULTS/ACTIONS
B2328-8 CHECK FOR VOLTAGE AT THE MOTOR (Continued)	
3 Steering Column/Ignition/Lighting Control Module Active Command STEERING COLUMN CONTROL 4 Trigger TELESCP IN On Then TELSCPOUT On	• Is voltage present for one second after each command is sent? → **Yes** REPLACE the telescope motor. RETEST the system. → **No** GO to **B2328-9**.
B2328-9 CHECK THE RELAY FOR VOLTAGE	
1 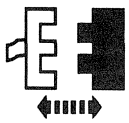 Steering Column Telescope Motor Relay C279 2 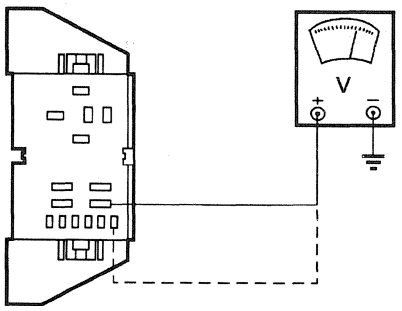 AG0180-A	2 Connect a voltmeter to the steering column telescope motor relay connector Pin C279-5, Circuit 908 (PK/LG), then to the Pin C279-2, Circuit 908 (PK/LG). • Is voltage B+ on both circuits? → **Yes** GO to **B2328-10**. → **No** SERVICE open in Circuit 908 (PK/LG) for an open. RETEST the system.

Official Licensed Product
Ford Motor Company

(Continued)

DIAGNOSIS AND TESTING (Continued)

DTC B2328: STEERING COLUMN REACH FEEDBACK POTENTIOMETER CIRCUIT FAILURE (Continued)

TEST CONDITIONS	TEST DETAILS/RESULTS/ACTIONS
B2328-10 CHECK THE GROUND FOR AN OPEN	
1 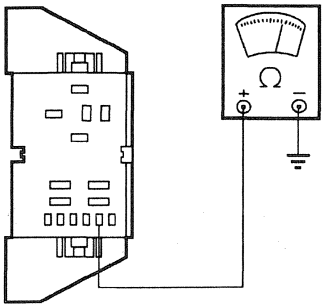 AG0181-A	1 Connect an ohmmeter between the steering column telescope motor relay connector Pin C297-4, Circuit 57 (BK) and the ground. • Is the resistance 5 ohms or less? → **Yes** GO to **B2328-11**. → **No** SERVICE Circuit 57 (BK) for an open. RETEST the system.
B2328-11 CHECK CIRCUIT 1222 (P/W) FOR A SHORT TO THE B+	
1 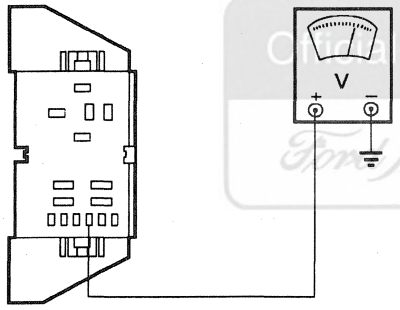 AG0182-A	1 Connect a voltmeter to the steering column telescope motor relay connector Pin C279-1, Circuit 1222 (P/W). • Is voltage present? → **Yes** GO to **B2328-12**. → **No** GO to **B2328-13**.

Ford Licensed Product
Ford Motor Company

(Continued)

DIAGNOSIS AND TESTING (Continued)

DTC B2328: STEERING COLUMN REACH FEEDBACK POTENTIOMETER CIRCUIT FAILURE (Continued)

TEST CONDITIONS	TEST DETAILS/RESULTS/ACTIONS
B2328-12 CHECK THE STEERING COLUMN/IGNITION/LIGHTING CONTROL MODULE FOR A SHORT TO THE B+	
1 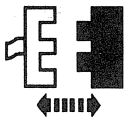 Steering Column/Ignition/Lighting Control Module Connector C288 2 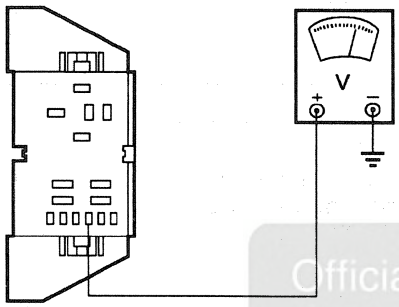 AG0182-A	2 Connect a voltmeter to the steering column telescope motor relay connector Pin C279-1, Circuit 1222 (P/W). • Is voltage present? → **Yes** SERVICE Circuit 1222 (P/W) for a short to the B+. RETEST the system. → **No** REPLACE the steering column/ignition/lighting control module. RETEST the system.
B2328-13 CHECK CIRCUIT 1222 (P/W) FOR SHORT TO GROUND	
1 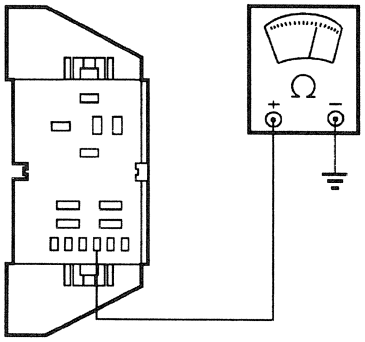 AG0183-A	1 Connect an ohmmeter between the steering column telescope motor relay connector Pin C279-1, Circuit 1222 (P/W) and the ground. • Is the resistance 10 K ohms or less? → **Yes** GO to **B2328-14**. → **No** GO to **B2328-15**.

(Continued)

Official Licensed Publication

DIAGNOSIS AND TESTING (Continued)

DTC B2328: STEERING COLUMN REACH FEEDBACK POTENTIOMETER CIRCUIT FAILURE (Continued)

TEST CONDITIONS	TEST DETAILS/RESULTS/ACTIONS
B2328-14 CHECK THE STEERING COLUMN/IGNITION/LIGHTING CONTROL MODULE FOR A SHORT TO THE GROUND	
1 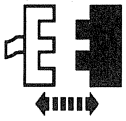 Steering Column/Ignition/Lighting Control Module Connector C288 2 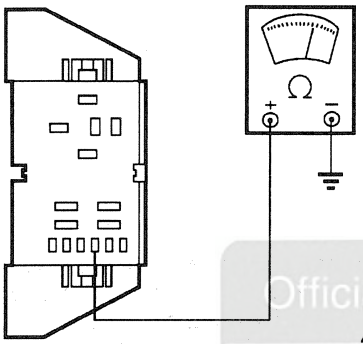 AG0183-A	2 Connect an ohmmeter between the steering column telescope motor relay connector Pin C279-1, Circuit 1222 (P/W) and the ground. • Is the resistance 10 K ohms or less? → **Yes** SERVICE Circuit 1222 (P/W) for short to ground. RETEST the system. → **No** REPLACE the steering column/ignition/lighting control module. RETEST the system.
B2328-15 CHECK THE STEERING COLUMN/IGNITION/LIGHTING CONTROL MODULE OPERATION	
1 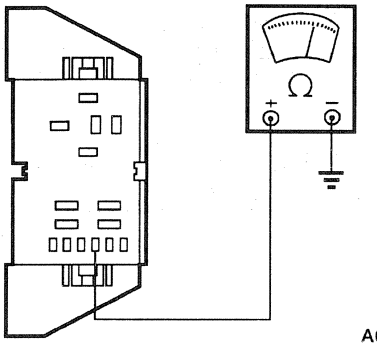 AG0183-A 2 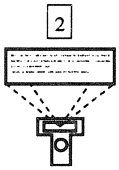 Steering Column/Ignition/Lighting Control Module Active Command STEERING COLUMN CONTROL 3 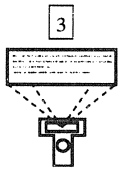 Trigger TELESCP IN On	1 Connect an ohmmeter between the steering column telescope motor relay connector Pin C279-1, Circuit 1222 (P/W) and ground.

(Continued)

DIAGNOSIS AND TESTING (Continued)

DTC B2328: STEERING COLUMN REACH FEEDBACK POTENTIOMETER CIRCUIT FAILURE (Continued)

TEST CONDITIONS	TEST DETAILS/RESULTS/ACTIONS
B2328-15 CHECK THE STEERING COLUMN/IGNITION/LIGHTING CONTROL MODULE OPERATION (Continued)	
	• Is the resistance 5 ohms or less for 1 second after the command is sent? → **Yes** GO to **B2328-17**. → **No** GO to **B2328-16**.
B2328-16 CHECK CIRCUIT 1222 (P/W) FOR AN OPEN	
1 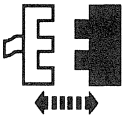 Steering Column/Ignition/Lighting Control Module Connector C288 2 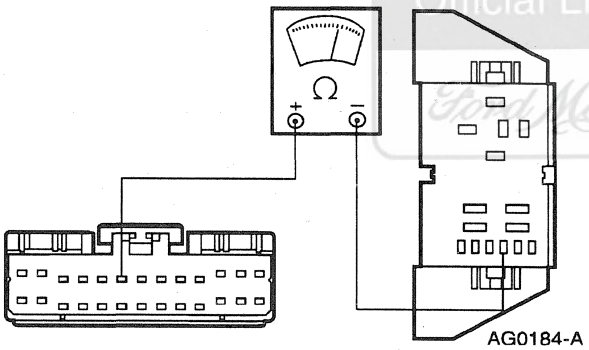 AG0184-A	2 Connect an ohmmeter between the steering column telescope motor relay connector Pin C279-1, Circuit 1222 (P/W) and the steering column/ignition/lighting control module connector Pin C288-6. • Is the resistance 5 ohms or less? → **Yes** REPLACE the steering column/ignition/lighting control module. RETEST the system. → **No** SERVICE Circuit 1222 (P/W) for an open. RETEST the system.

(Continued)

Official License Ford Motor Company

DIAGNOSIS AND TESTING (Continued)

DTC B2328: STEERING COLUMN REACH FEEDBACK POTENTIOMETER CIRCUIT FAILURE (Continued)

TEST CONDITIONS	TEST DETAILS/RESULTS/ACTIONS
B2328-17 CHECK CIRCUIT 1223 (GY/R) FOR AN OPEN	
1 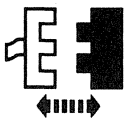 Steering Column Motor Connector C297	
2 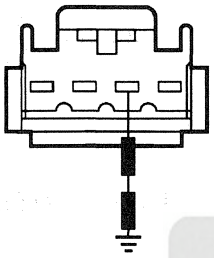 AG0223-A	2 Connect a jumper wire between the steering column motor connector Pin C297-3, Circuit 216 (T/R) and the ground.
3 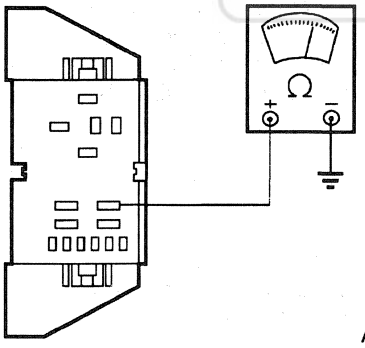 AG0193-A	3 Connect an ohmmeter between the steering column telescope motor relay connector Pin C279-3, Circuit 1223 (GY/R) and the ground. • Is the resistance 5 ohms or less? → **Yes** GO to **B2328-20**. → **No** GO to **B2328-18**.

Official Licensed Product
Ford Motor Company

(Continued)

DIAGNOSIS AND TESTING (Continued)

DTC B2328: STEERING COLUMN REACH FEEDBACK POTENTIOMETER CIRCUIT FAILURE (Continued)

TEST CONDITIONS	TEST DETAILS/RESULTS/ACTIONS
B2328-18 CHECK CIRCUIT 216 (T/R) FOR AN OPEN	
1 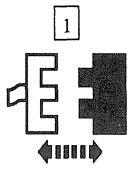 Steering Column/Ignition/Lighting Control Module Connector C289 2 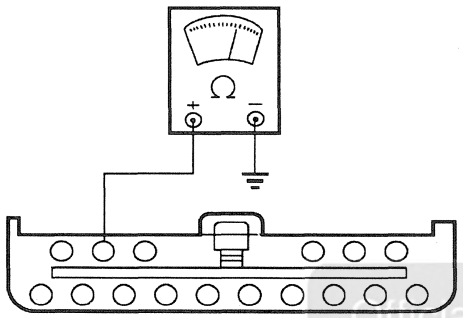 AG0185-A	2 Connect an ohmmeter between the steering column/ignition/lighting control module connector Pin C289-15, Circuit 216 (T/R) and the ground. • Is the resistance 5 ohms or less? → **Yes** GO to **B2328-19**. → **No** SERVICE Circuit 216 (T/R) for an open. RETEST the system.
B2328-19 CHECK THE STEERING COLUMN/IGNITION/LIGHTING CONTROL MODULE FOR AN OPEN	
1 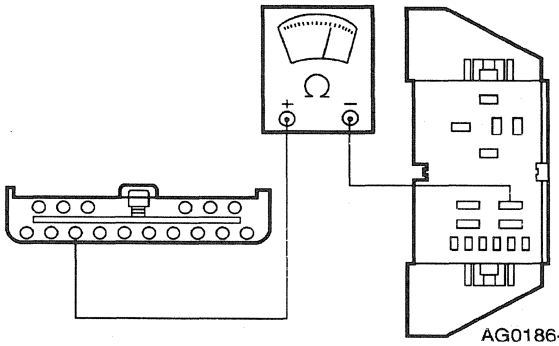 AG0186-A	1 Connect an ohmmeter between the steering column/ignition/lighting control module connector Pin C289-8 and the steering column telescope motor relay connector Pin C279-3, Circuit 1223 (GY/R). • Is the resistance 5 ohms or less? → **Yes** REPLACE the steering column/ignition/lighting control module. RETEST the system. → **No** SERVICE Circuit 1223 (GY/R) for an open. RETEST the system.

Official Licensed Product
Ford Motor Company

(Continued)

DIAGNOSIS AND TESTING (Continued)

DTC B2328: STEERING COLUMN REACH FEEDBACK POTENTIOMETER CIRCUIT FAILURE (Continued)

TEST CONDITIONS	TEST DETAILS/RESULTS/ACTIONS
B2328-20 CHECK CIRCUIT 695 (BK/O) FOR AN OPEN	
1 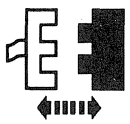 Steering Column Tilt/Telescope Common Motor Relay C292 2 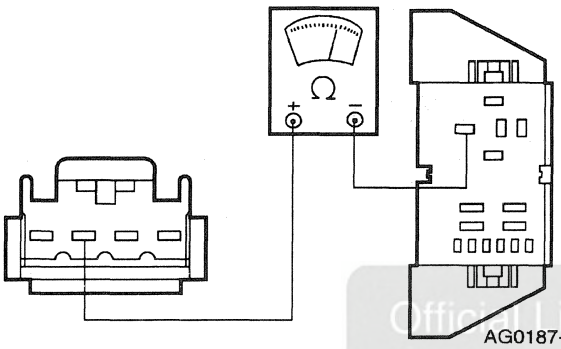 AG0187-A	2 Connect an ohmmeter between the steering column motor connector Pin C297-2 and the steering column tilt/telescope common motor relay connector Pin C292-30, Circuit 695 (BK/O). • Is the resistance 5 ohms or less? → **Yes** REPLACE the steering column telescope motor relay. RETEST the system. → **No** SERVICE Circuit 695 (BK/O) for an open. RETEST the system.

DTC B2332: STEERING COLUMN TILT FEEDBACK POTENTIOMETER CIRCUIT FAILURE

TEST CONDITIONS	TEST DETAILS/RESULTS/ACTIONS
B2332-1 CHECK FOR DTC B2328	
2 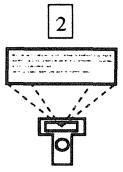 Steering Column/Ignition/Lighting Control Module Self-Test	1 Activate the steering column adjustment switch to full travel in all four directions. 3 Retrieve the continuous DTCs, and the self test DTCs. • Are both DTCs B2332 and B2328 present in the self test or continuous DTCs? → **Yes** GO to Pinpoint Test A. → **No** GO to **B2332-2.**

(Continued)

DIAGNOSIS AND TESTING (Continued)

DTC B2332: STEERING COLUMN TILT FEEDBACK POTENTIOMETER CIRCUIT FAILURE (Continued)

TEST CONDITIONS	TEST DETAILS/RESULTS/ACTIONS
B2332-2 CHECK CONTINUOUS DTCs	
1 Steering Column/Ignition/Lighting Control Module Continuous DTCs	• Is DTC B2332 present? → **Yes** GO to **B2332-3**. → **No** GO to **B2332-7**.
B2332-3 CHECK CIRCUIT 213 (DB/Y) FOR A SHORT TO THE B+	
1 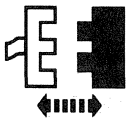 Steering Column/Ignition/Lighting Control Module Connector C286 2 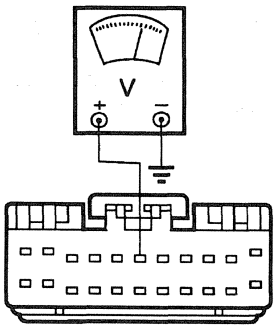 AG0188-A	2 Connect a voltmeter to the steering column/ignition/lighting control module connector Pin C286-6, Circuit 213 (DB/Y). • Is voltage present? → **Yes** SERVICE Circuit 213 (DB/Y) for a short to the B+. RETEST the system. → **No** GO to **B2332-4**.

Official Licensed Product
Ford Motor Company

(Continued)

DIAGNOSIS AND TESTING (Continued)

DTC B2332: STEERING COLUMN TILT FEEDBACK POTENTIOMETER CIRCUIT FAILURE (Continued)

TEST CONDITIONS	TEST DETAILS/RESULTS/ACTIONS
B2332-4 CHECK CIRCUIT 213 (DB/Y) FOR A SHORT TO THE GROUND	
1 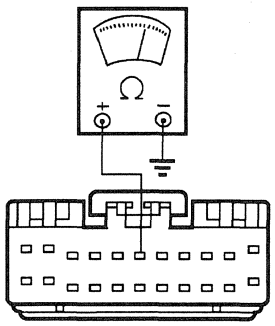 AG0189-A	1 Connect an ohmmeter between the steering column/ignition/lighting control module connector Pin C286-6, Circuit 213 (DB/Y) and the ground. • Is the resistance 10 K ohms or less? → **Yes** SERVICE Circuit 213 (DB/Y) for short to ground. RETEST the system. → **No** GO to **B2332-5**.
B2332-5 CHECK CIRCUIT 213 (DB/Y) FOR AN OPEN	
1 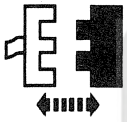 Steering Column Tilt/Telescope Potentiometer Connector C216 2 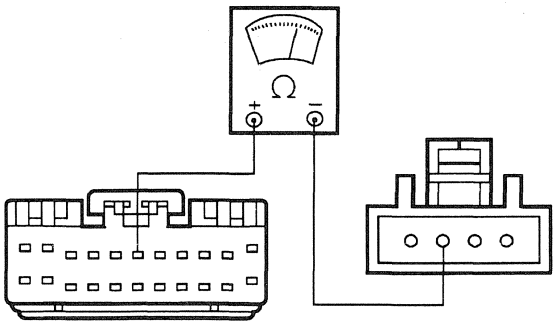 AG0190-A	2 Connect an ohmmeter between the steering column/ignition/lighting control module connector Pin C286-6 and the steering column tilt/telescope potentiometer Connector C216, Circuit 213 (DB/Y). • Is the resistance 5 ohms or less? → **Yes** GO to **B2332-6**. → **No** SERVICE Circuit 213 (DB/Y) for open. RETEST the system.

Official Licensed Product
Ford Motor Company

(Continued)

DIAGNOSIS AND TESTING (Continued)

DTC B2332: STEERING COLUMN TILT FEEDBACK POTENTIOMETER CIRCUIT FAILURE (Continued)

TEST CONDITIONS	TEST DETAILS/RESULTS/ACTIONS
B2332-6 CHECK THE POTENTIOMETERS	
1 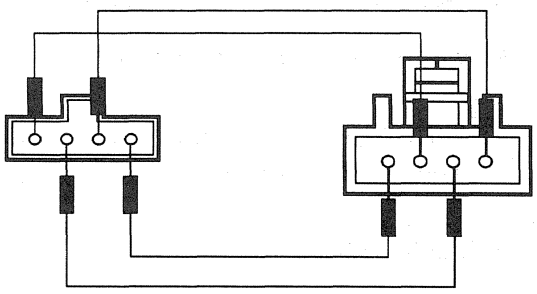 AG0154-A	1 Connect a jumper wire between the steering column tilt/telescope potentiometer Connector C216, Circuit 668 (PK/O) and the steering column tilt/telescope potentiometer terminal 1. 2 Connect a jumper wire between the steering column tilt/telescope potentiometer Connector C216, Circuit 669 (DG/W) and the steering column tilt/telescope potentiometer terminal 3. 3 Connect a jumper wire between the steering column tilt/telescope potentiometer Connector C216, Circuit 213 (DB/Y) and the steering column tilt/telescope potentiometer terminal 4. 4 Connect a jumper wire between the steering column tilt/telescope potentiometer Connector C216, Circuit 214 (PK/LB) and the steering column tilt/telescope potentiometer terminal 2.
5 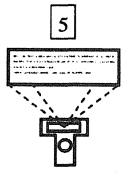 Steering Column/Ignition/Lighting Control Module Self-Test	• Is DTC B2328 retrieved? → **Yes** REPLACE the steering column tilt/telescope potentiometers. RETEST the system. → **No** REPLACE the steering column/ignition/lighting control module. RETEST the system.

Official Licensed Product
Ford Motor Company

(Continued)

DIAGNOSIS AND TESTING (Continued)

DTC B2332: STEERING COLUMN TILT FEEDBACK POTENTIOMETER CIRCUIT FAILURE (Continued)

TEST CONDITIONS	TEST DETAILS/RESULTS/ACTIONS
B2332-7 CHECK FOR STEERING COLUMN MOVEMENT	
NOTE: This active command will only power the motors for one second.	
1 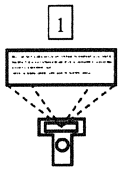 Steering Column/Ignition/Lighting Control Module Active Command STEERING COLUMN CONTROL 2 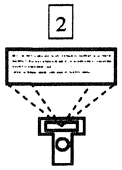 Trigger TELESCP IN On Then TELSCPOUT On	• Does the steering column tilt up and down? → **Yes** REPLACE the steering column tilt/telescope potentiometers. RETEST the system. → **No** GO to **B2332-8.**
B2332-8 CHECK FOR VOLTAGE AT THE MOTOR	
1 Steering Column Motor Connector C297 2 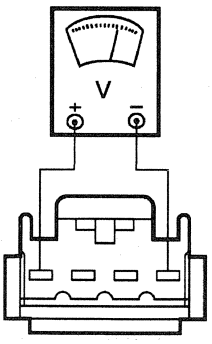 AG0191-A	2 Connect a voltmeter between the steering column motor connector Pin C297-1, Circuit 698 (R) and the Pin C297-4, Circuit 695 (BK/O).

Official Licensed Product
Ford Motor Company

(Continued)

DIAGNOSIS AND TESTING (Continued)

DTC B2332: STEERING COLUMN TILT FEEDBACK POTENTIOMETER CIRCUIT FAILURE (Continued)

TEST CONDITIONS	TEST DETAILS/RESULTS/ACTIONS
B2332-8 CHECK FOR VOLTAGE AT THE MOTOR (Continued)	
3 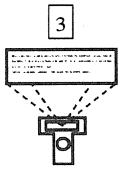 Steering Column/Ignition/Lighting Control Module Active Command STEERING COLUMN CONTROL 4 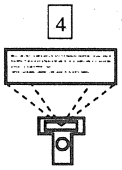 Trigger TILT UP On Then TILT DOWN On	• Is voltage present for one second after each command is sent? → **Yes** REPLACE the tilt motor. RETEST the system. → **No** GO to **B2332-9**.
B2332-9 CHECK THE RELAY FOR VOLTAGE	
1 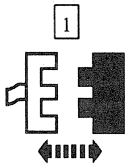 Steering Column Tilt Motor Relay C278 2 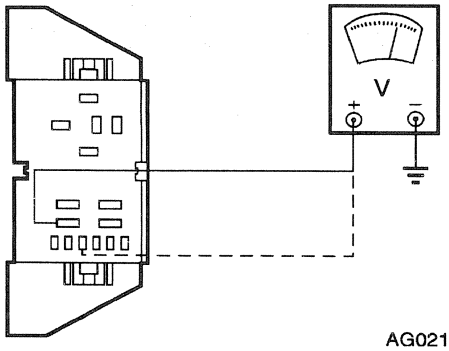 AG0216-A	2 Connect a voltmeter to the steering column tilt motor relay connector Pin C278-5, Circuit 908 (PK/LG), then to the Pin C278-2, Circuit 908 (PK/LG). • Is voltage B+ on both the circuits? → **Yes** GO to **B2332-10**. → **No** SERVICE Circuit 908 (PK/LG) for an open. RETEST the system.

Official Licensed Product
Ford Motor Company

(Continued)

DIAGNOSIS AND TESTING (Continued)

DTC B2332: STEERING COLUMN TILT FEEDBACK POTENTIOMETER CIRCUIT FAILURE (Continued)

TEST CONDITIONS	TEST DETAILS/RESULTS/ACTIONS
B2332-10 CHECK THE GROUND FOR AN OPEN	
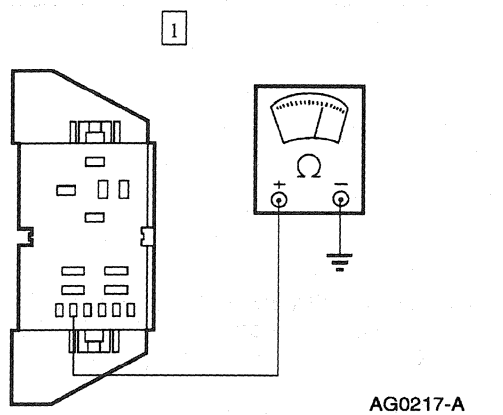 AG0217-A	1 Connect an ohmmeter between the steering column tilt motor relay connector Pin C298-4, Circuit 57 (BK) and the ground. • Is the resistance 5 ohms or less? → **Yes** GO to **B2332-11**. → **No** SERVICE Circuit 57 (BK) for open. RETEST the system.
B2332-11 CHECK CIRCUIT 1220 (O/R) FOR A SHORT TO THE B+	
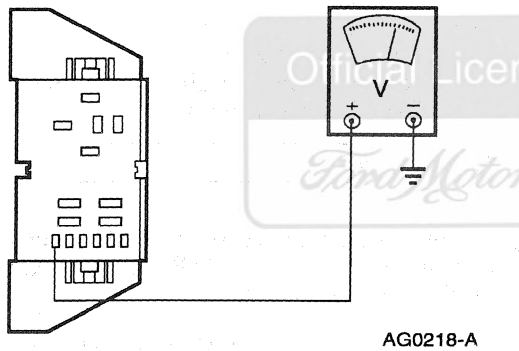 AG0218-A	1 Connect a voltmeter to the steering column tilt motor relay connector Pin C278-1, Circuit 1220 (O/R). • Is voltage present? → **Yes** GO to **B2332-12**. → **No** GO to **B2332-13**.

Official Licensed Product Ford Motor Company®

(Continued)

DIAGNOSIS AND TESTING (Continued)

DTC B2332: STEERING COLUMN TILT FEEDBACK POTENTIOMETER CIRCUIT FAILURE (Continued)

TEST CONDITIONS	TEST DETAILS/RESULTS/ACTIONS
B2332-12 CHECK THE STEERING COLUMN/IGNITION/LIGHTING CONTROL MODULE FOR A SHORT TO THE B+	
1 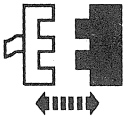 Steering Column/Ignition/Lighting Control Module Connector C288 2 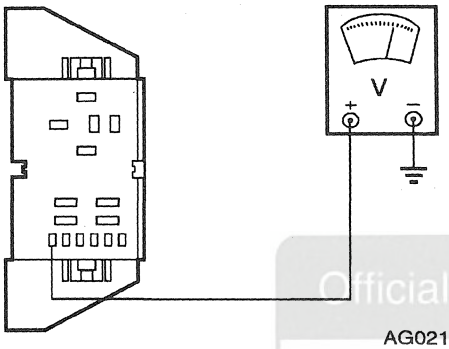 AG0218-A	2 Connect a voltmeter to the steering column tilt motor relay connector Pin C278-1, Circuit 1220 (O/R). • Is voltage present? → **Yes** SERVICE Circuit 1220 (O/R) for a short to the B+. RETEST the system. → **No** REPLACE the steering column/ignition/lighting control module. RETEST the system.
B2332-13 CHECK CIRCUIT 1220 (O/R) FOR A SHORT TO THE GROUND	
1 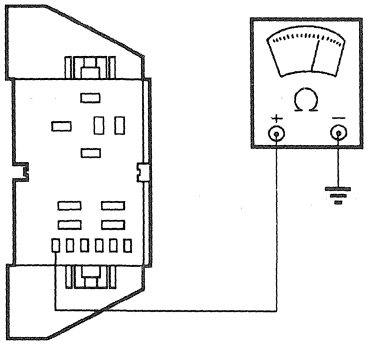 AG0219-A	1 Connect an ohmmeter between the steering column tilt motor relay connector Pin C278-1, Circuit 1220 (O/R) and the ground. • Is the resistance 10 K ohms or less? → **Yes** GO to **B2332-14**. → **No** GO to **B2332-15**.

(Continued)

Official Licensed

DIAGNOSIS AND TESTING (Continued)

DTC B2332: STEERING COLUMN TILT FEEDBACK POTENTIOMETER CIRCUIT FAILURE (Continued)

TEST CONDITIONS	TEST DETAILS/RESULTS/ACTIONS
B2332-14 CHECK THE STEERING COLUMN/IGNITION/LIGHTING CONTROL MODULE FOR A SHORT TO THE GROUND	
1 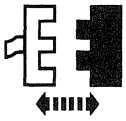 Steering Column/Ignition/Lighting Control Module Connector C288 2 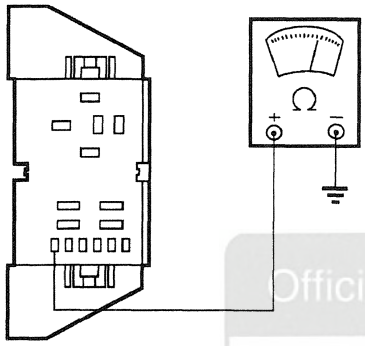 AG0219-A	2 Connect an ohmmeter between the steering column tilt motor relay connector Pin C278-1, Circuit 1220 (O/R) and the ground. • Is the resistance 10 K ohms or less? → **Yes** SERVICE Circuit 1220 (O/R) for a short to the ground. RETEST the system. → **No** REPLACE the steering column/ignition/lighting control module. RETEST the system.
B2332-15 CHECK THE STEERING COLUMN/IGNITION/LIGHTING CONTROL MODULE OPERATION	
1 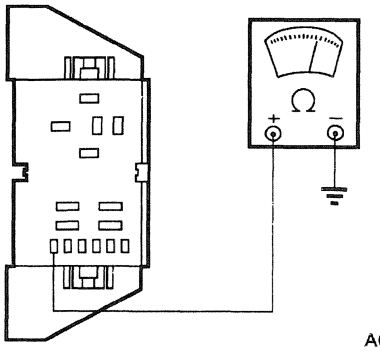 AG0219-A 2 Steering Column/Ignition/Lighting Control Module Active Command STEERING COLUMN CONTROL 3 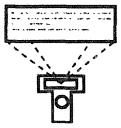 Trigger TILT UP On	1 Connect an ohmmeter between the steering column tilt motor relay connector Pin C278-1, Circuit 1220 (O/R) and the ground.

(Continued)

DIAGNOSIS AND TESTING (Continued)

DTC B2332: STEERING COLUMN TILT FEEDBACK POTENTIOMETER CIRCUIT FAILURE (Continued)

TEST CONDITIONS	TEST DETAILS/RESULTS/ACTIONS
B2332-15 CHECK THE STEERING COLUMN/IGNITION/LIGHTING CONTROL MODULE OPERATION (Continued)	
	• Is the resistance 5 ohms or less for 1 second after the command is sent? → **Yes** GO to **B2332-17**. → **No** GO to **B2332-16**.
B2332-16 CHECK CIRCUIT 1220 (O/R) FOR AN OPEN	
1 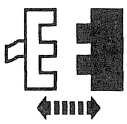 Steering Column/Ignition/Lighting Control Module Connector C288 2 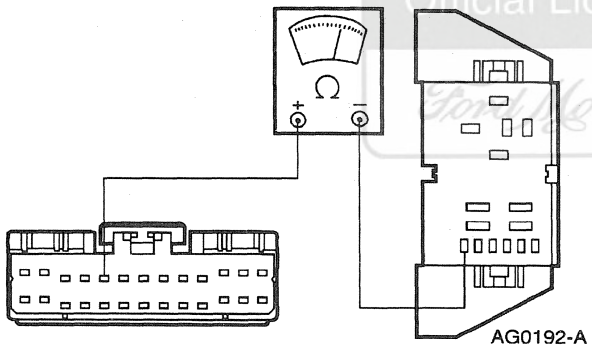 AG0192-A	2 Connect an ohmmeter between the steering column tilt motor relay connector Pin C278-1, Circuit 1220 (O/R) and the steering column/ignition/lighting control module connector Pin C288-5. • Is the resistance 5 ohms or less? → **Yes** REPLACE the steering column/ignition/lighting control module. RETEST the system. → **No** SERVICE Circuit 1220 (O/R) for an open. RETEST the system.

(Continued)

Official Licensed Ford Motor Company

DIAGNOSIS AND TESTING (Continued)

DTC B2332: STEERING COLUMN TILT FEEDBACK POTENTIOMETER CIRCUIT FAILURE (Continued)

TEST CONDITIONS	TEST DETAILS/RESULTS/ACTIONS
B2332-17 CHECK CIRCUIT 1221 (W/O) FOR AN OPEN	
1 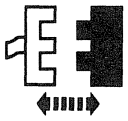 Steering Column Motor Connector C297	
2 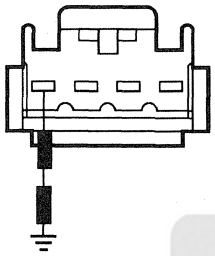 AG0222-A	2 Connect a jumper wire between the steering column motor connector Pin C297-1, Circuit 698 (R) and the ground.
3 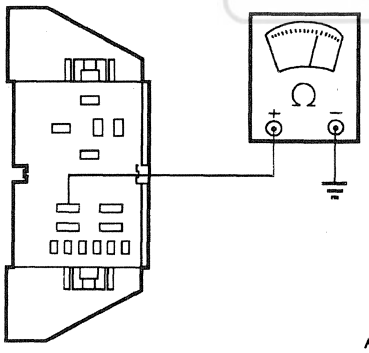 AG0220-A	3 Connect an ohmmeter between the steering column tilt motor relay connector Pin C278-3, Circuit 1221 (W/O) and the ground. • Is the resistance 5 ohms or less? → **Yes** GO to **B2332-20**. → **No** GO to **B2332-18**.

Official Licensed Product
Ford Motor Company

(Continued)

DIAGNOSIS AND TESTING (Continued)

DTC B2332: STEERING COLUMN TILT FEEDBACK POTENTIOMETER CIRCUIT FAILURE (Continued)

TEST CONDITIONS	TEST DETAILS/RESULTS/ACTIONS
B2332-18 CHECK CIRCUIT 698 (R) FOR AN OPEN	
1 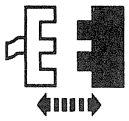 Steering Column/Ignition/Lighting Control Module Connector C289 2 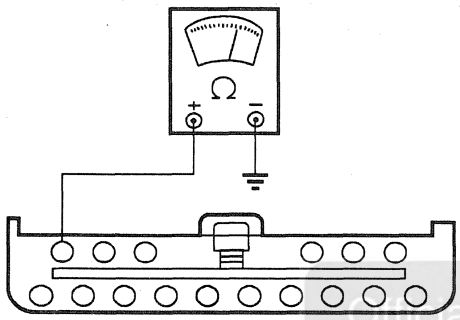 AG0194-A	2 Connect an ohmmeter between the steering column/ignition/lighting control module connector Pin C289-16, Circuit 698 (R) and the ground. • Is the resistance 5 ohms or less? → **Yes** GO to **B2332-19**. → **No** SERVICE Circuit 698 (R) for an open. RETEST the system.
B2332-19 CHECK THE STEERING COLUMN/IGNITION/LIGHTING CONTROL MODULE FOR AN OPEN	
1 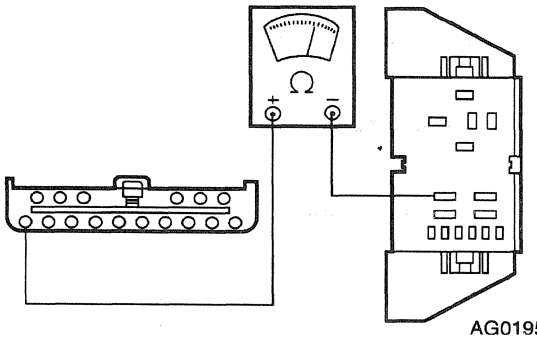 AG0195-A	1 Connect an ohmmeter between the steering column/ignition/lighting control module connector Pin C289-10 and the steering column tilt motor relay connector Pin C278-3, Circuit 1221 (W/O). • Is the resistance 5 ohms or less? → **Yes** REPLACE the steering column/ignition/lighting control module. RETEST the system. → **No** SERVICE Circuit 1221 (W/O) for an open. RETEST the system.

Official Licensed Product Ford Motor Company

(Continued)

DIAGNOSIS AND TESTING (Continued)

DTC B2332: STEERING COLUMN TILT FEEDBACK POTENTIOMETER CIRCUIT FAILURE (Continued)

TEST CONDITIONS	TEST DETAILS/RESULTS/ACTIONS
B2332-20 CHECK CIRCUIT 695 (BK/O) FOR AN OPEN	
1 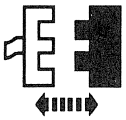 Steering Column Tilt/Telescope Common Motor Relay C292 2 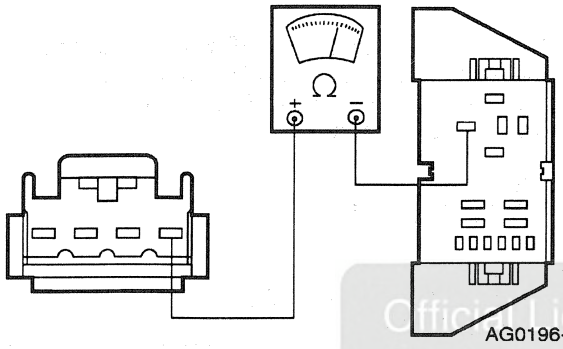 AG0196-A	2 Connect an ohmmeter between the steering column motor connector Pin C297-4 and the steering column tilt/telescope common motor relay connector Pin C292-30, Circuit 695 (BK/O). • Is the resistance 5 ohms or less? → **Yes** REPLACE the steering column telescope motor relay. RETEST the system. → **No** SERVICE Circuit 695 (BK/O) for an open. RETEST the system.

DTC B2351: STEERING COLUMN SWITCH SIGNAL CIRCUIT FAILURE

TEST CONDITIONS	TEST DETAILS/RESULTS/ACTIONS
B2351-1 CHECK THE PIDs	
1 Steering Column/Ignition/Lighting Control Module PID TILT and PID TELESCP	• Does the PID TILT and the PID TELESCP read OFF? → **Yes** GO to **B2351-4**. → **No** GO to **B2351-2**.

(Continued)

DIAGNOSIS AND TESTING (Continued)

DTC B2351: STEERING COLUMN SWITCH SIGNAL CIRCUIT FAILURE (Continued)

TEST CONDITIONS	TEST DETAILS/RESULTS/ACTIONS
B2351-2 CHECK THE PID TILT	
1 Steering Column/Ignition/Lighting Control Module PID TILT	2 Actuate the steering column adjust switch to the tilt up then tilt down position while monitoring the PID TILT. • Does the PID TILT read UP with the switch in the up position and DOWN with the switch in the down position and OFF with the switch in the neutral position? → **Yes** GO to **B2351-3**. → **No** REPLACE the multi-function switch. RETEST the system.

(Continued)

Official Licensed Ford Motor Company

DIAGNOSIS AND TESTING (Continued)

DTC B2351: STEERING COLUMN SWITCH SIGNAL CIRCUIT FAILURE (Continued)

TEST CONDITIONS	TEST DETAILS/RESULTS/ACTIONS
B2351-3 CHECK THE PID TELESCP	
1 Steering Column/Ignition/Lighting Control Module PID TELESCP	2 Actuate the steering column adjust switch to the telescope out then the telescope in position while monitoring the PID TELESCP. • Does the PID TELESCP read IN with the switch in the In position and OUT with the switch in the Out position and OFF with the switch in the neutral position? → **Yes** REPEAT the steering column/ignition/lighting control module self-test. If the DTC B2351 is retrieved, REPLACE the steering column/ignition/lighting control module. RETEST the system. → **No** REPLACE the multi-function switch. RETEST the system.
B2351-4 CHECK CIRCUIT WITH THE MULTI-FUNCTION SWITCH DISCONNECTED	
1 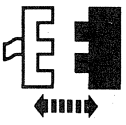 Multi-Function Switch Connector 2 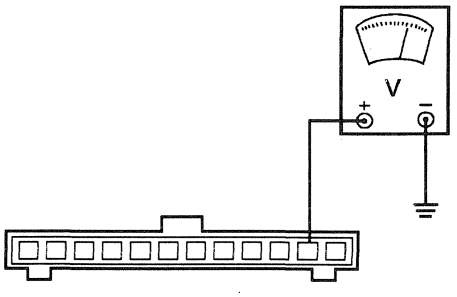 AG0243-A	2 Connect a voltmeter to the multi-function switch connector Pin C215-11, Circuit 998 (Y/R). • Is the voltage reading B+? → **Yes** GO to **B2351-5**. → **No** GO to **B2351-6**.

(Continued)

Official Licensed Product
Ford Motor Company

DIAGNOSIS AND TESTING (Continued)

DTC B2351: STEERING COLUMN SWITCH SIGNAL CIRCUIT FAILURE (Continued)

TEST CONDITIONS	TEST DETAILS/RESULTS/ACTIONS
B2351-5 CHECK CIRCUIT 998 (Y/R) FOR A SHORT B+	
1 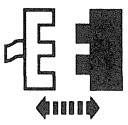 Steering Column/Ignition/Lighting Control Module Connector C286 2 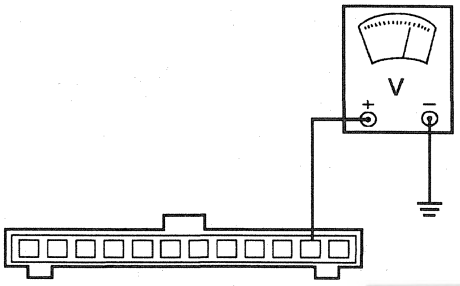 AG0243-A	2 Connect a voltmeter to the multi-function switch connector Pin C215-11, Circuit 998 (Y/R). • Is the voltage reading B+? → **Yes** SERVICE Circuit 998 (Y/R) for short to B+. RETEST the system. → **No** REPLACE the steering column/ignition/lighting control module. RETEST the system.
B2351-6 CHECK CIRCUIT 997 (BR) FOR SHORT TO B+	
1 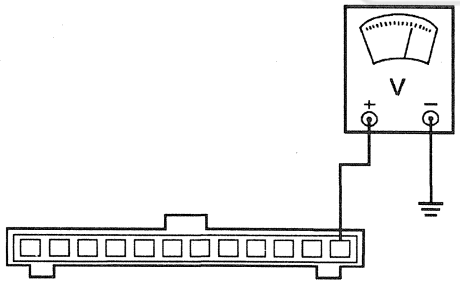 AG0242-A	1 Connect a voltmeter to the multi-function switch connector Pin C215-12, Circuit 997 (BR). • Is the voltage reading B+? → **Yes** SERVICE Circuit 997 (BR) for a short to B+. RETEST the system. → **No** GO to **B2351-7**.
B2351-7 CHECK THE STEERING COLUMN/IGNITION/LIGHTING CONTROL MODULE	
2 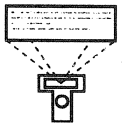 Steering Column/Ignition/Lighting Control Module Self-Test	1 Restore the vehicle.

(Continued)

Official Licensed Product
Ford Motor Company

DIAGNOSIS AND TESTING (Continued)

DTC B2351: STEERING COLUMN SWITCH SIGNAL CIRCUIT FAILURE (Continued)

TEST CONDITIONS	TEST DETAILS/RESULTS/ACTIONS
B2351-7 CHECK THE STEERING COLUMN/IGNITION/LIGHTING CONTROL MODULE (Continued)	
	• Is DTC **B2351** retrieved? → **Yes** REPLACE the steering column/ignition/lighting control module. RETEST the system. → **No** REPLACE the multi-function switch. RETEST the system.

PINPOINT TEST A: DTC B2332 AND DTC B2328 COLUMN FEEDBACK POTENTIOMETERS CIRCUIT FAILURE

TEST CONDITIONS	TEST DETAILS/RESULTS/ACTIONS
A1 CHECK FOR CONTINUOUS DTCs	
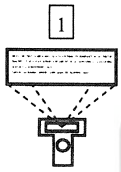 Steering Column/Ignition/Lighting Control Module Self-Test	• Are DTCs B2332 and B2328 retrieved? → **Yes** GO to **A5**. → **No** GO to **A2**.

Official Licensed Product
Ford Motor Company

(Continued)

DIAGNOSIS AND TESTING (Continued)

PINPOINT TEST A: DTC B2332 AND DTC B2328 COLUMN FEEDBACK POTENTIOMETERS CIRCUIT FAILURE (Continued)

TEST CONDITIONS	TEST DETAILS/RESULTS/ACTIONS
A2 CHECK CIRCUIT 668 (PK/O) FOR A SHORT TO THE B+	
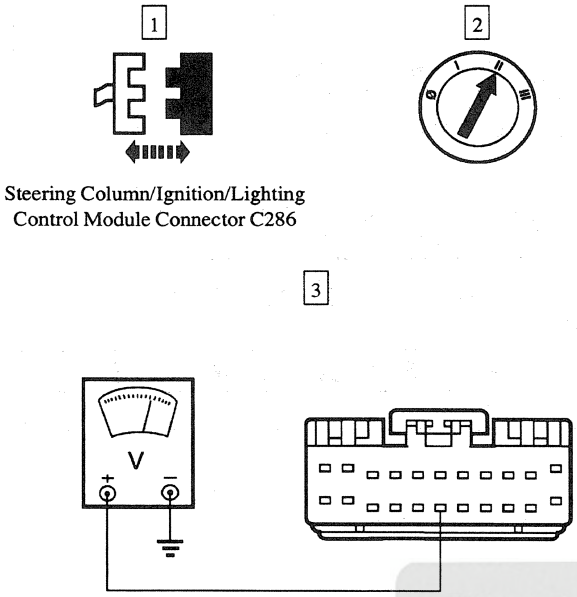	3 Connect a voltmeter to the steering column/ignition/lighting control module connector Pin C286-17, Circuit 668 (PK/O). • Is voltage reading B+? → **Yes** GO to **A3**. → **No** GO to **A4**.
A3 CHECK CIRCUIT 669 (DG/W) FOR A SHORT TO THE B+	
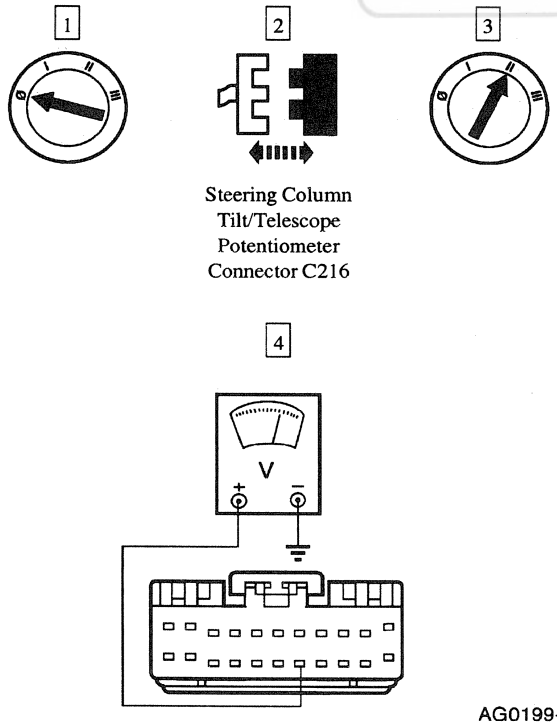	4 Connect a voltmeter to the steering column/ignition/lighting control module connector Pin C286-18, Circuit 669 (DG/W). • Is the voltage reading B+? → **Yes** SERVICE Circuit 669 (DG/W) for a short to the B+. RETEST the system. → **No** SERVICE Circuit 668 (PK/O) for a short to the B+. RETEST the system.

Official Licensed Product

(Continued)

DIAGNOSIS AND TESTING (Continued)

PINPOINT TEST A: DTC B2332 AND DTC B2328 COLUMN FEEDBACK POTENTIOMETERS CIRCUIT FAILURE (Continued)

TEST CONDITIONS	TEST DETAILS/RESULTS/ACTIONS
A4 CHECK CIRCUIT 668 (PK/O) FOR AN OPEN	
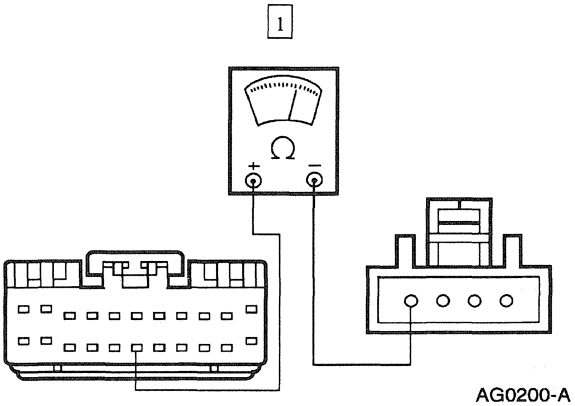	1 Connect an ohmmeter between the steering column/ignition/lighting control module connector Pin C286-17 and the steering column tilt/telescope potentiometer Connector C216, Circuit 668 (PK/O). • Is the resistance 5 ohms or less? → **Yes** REPLACE the steering column/ignition/lighting control module. RETEST the system. → **No** SERVICE Circuit 668 (PK/O) for an open. RETEST the system.
A5 CHECK FOR COLUMN MOTOR MOTION	
NOTE: This active command will only power the motors for one second per trigger.	
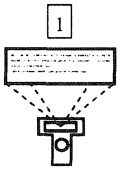 Steering Column/Ignition/Lighting Control Module Active Command STEERING COLUMN CONTROL 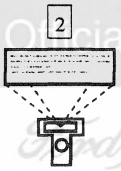 Trigger TILT UP, TILT DOWN, TELSCP IN and TELSCPOUT On	• Did the steering column motors move? → **Yes** GO to **A6**. → **No** GO to **A10**.

Official Licensed Product Ford Motor Company

(Continued)

DIAGNOSIS AND TESTING (Continued)

PINPOINT TEST A: DTC B2332 AND DTC B2328 COLUMN FEEDBACK POTENTIOMETERS CIRCUIT FAILURE (Continued)

TEST CONDITIONS	TEST DETAILS/RESULTS/ACTIONS
A6 CHECK CIRCUIT 669 (DG/W) FOR AN OPEN	
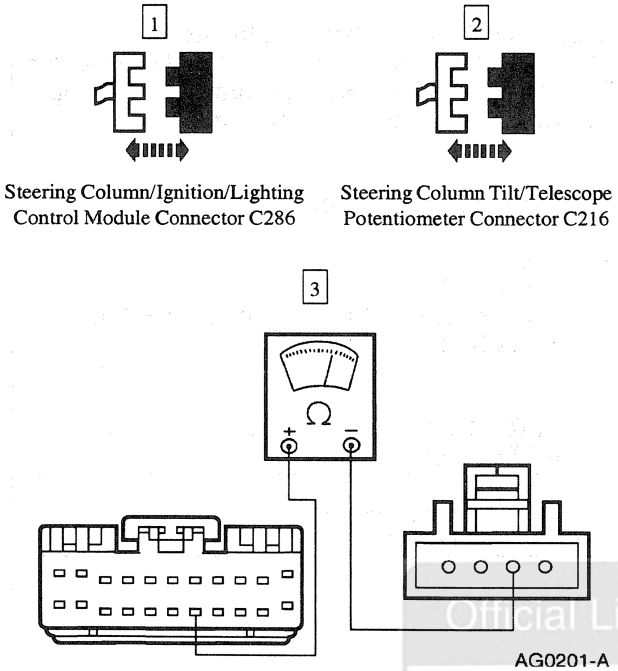	3 Connect an ohmmeter between the steering column/ignition/lighting control module connector Pin C286-18 and the steering column tilt/telescope potentiometer Connector C216, Circuit 669 (DG/W). • Is the resistance 5 ohms or less? → **Yes** GO to **A7**. → **No** SERVICE Circuit 669 (DG/W) for an open. RETEST the system.
A7 CHECK CIRCUIT 669 (DG/W) FOR A SHORT TO THE GROUND	
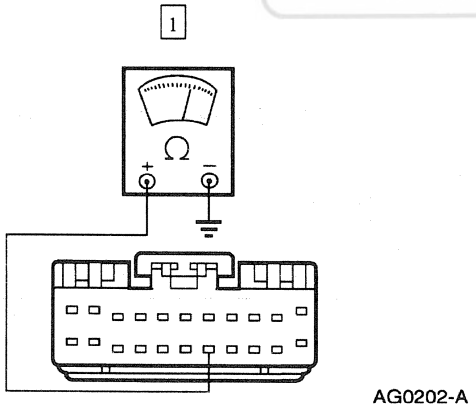	1 Connect an ohmmeter between the steering column/ignition/lighting control module connector Pin C286-18, Circuit 669 (DG/W) and the ground. • Is the resistance 10 K ohms or less? → **Yes** SERVICE Circuit 669 (DG/W) for a short to the ground. RETEST the system. → **No** GO to **A8**.

(Continued)

Official Licensed Product

DIAGNOSIS AND TESTING (Continued)

PINPOINT TEST A: DTC B2332 AND DTC B2328 COLUMN FEEDBACK POTENTIOMETERS CIRCUIT FAILURE (Continued)

TEST CONDITIONS	TEST DETAILS/RESULTS/ACTIONS
A8 CHECK CIRCUIT 668 (PK/O) FOR A SHORT TO THE GROUND	
1 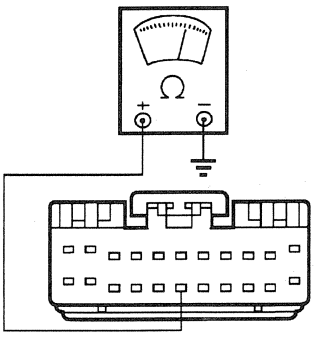 AG0203-A	1 Connect an ohmmeter between the steering column/ignition/lighting control module connector Pin C286-17, Circuit 668 (PK/O) and the ground. • Is the resistance 10 K ohms or less? → **Yes** SERVICE Circuit 668 (PK/O) for a short to the ground. RETEST the system. → **No** GO to **A9**.
A9 CHECK FOR MOTOR MOTION SENSED	
1 Steering Column/Ignition/ Lighting Control Module Connector C286 2 Steering Column Tilt/Telescope Potentiometer Connector C216 3 Steering Column/Ignition/ Lighting Control Module Active Command STEERING COLUMN CONTROL 4 Select PIDs TELEPOS and TILTPOS	5 **NOTE:** This active command will only power the motors for one second. Trigger TILT UP, TILT DOWN, TELSCP IN and TELSCPOUT on, one at a time while monitoring the PID TELEPOS and TILTPOS. • Do the PIDs TELEPOS and TILTPOS read SENSED when the corresponding motors are triggered on? → **Yes** INSPECT the steering column tilt/telescope potentiometer connection and the steering column/ignition/lighting control module connectors for loose or intermittent connections. RETEST the system. → **No** REPLACE the steering column tilt-telescope potentiometers. RETEST the system.

Official Licensed Product Ford Motor Company

(Continued)

DIAGNOSIS AND TESTING (Continued)

PINPOINT TEST A: DTC B2332 AND DTC B2328 COLUMN FEEDBACK POTENTIOMETERS CIRCUIT FAILURE (Continued)

TEST CONDITIONS	TEST DETAILS/RESULTS/ACTIONS
A10 CHECK POWER DISTRIBUTION BOX FUSE 12 (15A)	
1 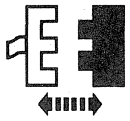 Power Distribution Box Fuse 12 (15A) 2 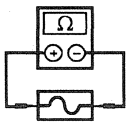 Power Distribution Box Fuse 12 (15A)	• Is Fuse 12 (15A) OK? → **Yes** GO to **A11**. → **No** GO to **A19**.
A11 CHECK CIRCUIT 908 (PK/LG) FOR AN OPEN	
1 Power Distribution Box Fuse 12 (15A) 2 Steering Column Tilt/Telescope Common Motor Relay C292 3 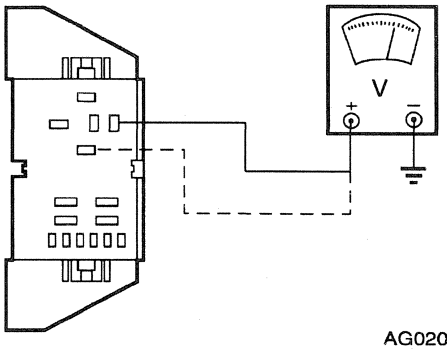 AG0204-A	3 Connect a voltmeter to the steering column tilt/telescope common motor relay connector Pin C292-85, Circuit 908 (PK/LG) then Pin C292-87, Circuit 908 (PK/LG). • Is voltage present on both the circuits? → **Yes** GO to **A12**. → **No** SERVICE Circuit 908 (PK/LG) for open. RETEST the system.

Ford Motor Company Licensed Product

(Continued)

DIAGNOSIS AND TESTING (Continued)

PINPOINT TEST A: DTC B2332 AND DTC B2328 COLUMN FEEDBACK POTENTIOMETERS CIRCUIT FAILURE (Continued)

TEST CONDITIONS	TEST DETAILS/RESULTS/ACTIONS
A12 CHECK CIRCUIT 57 (BK) FOR AN OPEN	
1 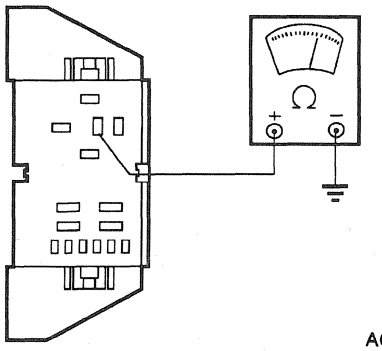 AG0205-A	1 Connect an ohmmeter between the steering column tilt/telescope common motor relay connector Pin C292-87A, Circuit 57 (BK) and the ground. • Is the resistance 5 ohms or less? → **Yes** GO to **A13**. → **No** SERVICE Circuit 57 (BK) for an open. RETEST the system.
A13 CHECK CIRCUIT 462 (P) FOR VOLTAGE	
1 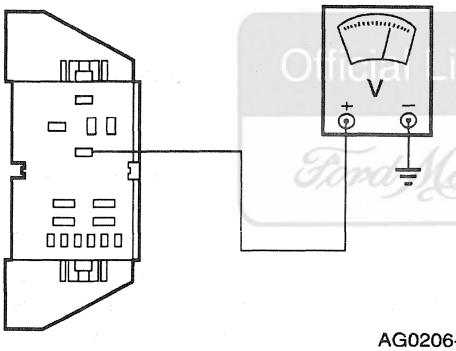 AG0206-A	1 Connect a voltmeter to the steering column tilt/telescope common motor relay connector Pin C292-86, Circuit 462 (P). • Is voltage present? → **Yes** SERVICE Circuit 462 (P) for a short to the B+. RETEST the system. → **No** GO to **A14**.
A14 CHECK CIRCUIT 462 (P) FOR A SHORT TO THE GROUND	
1 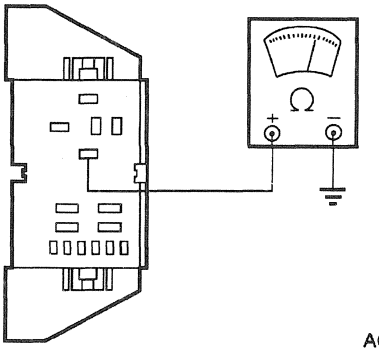 AG0207-A	1 Connect an ohmmeter between the steering column tilt/telescope common motor relay connector Pin C292-86, Circuit 462 (P) and the ground. • Is the resistance 10 K ohms or less? → **Yes** GO to **A15**. → **No** GO to **A16**.

(Continued)

Official Licensed Product Ford Motor Company

DIAGNOSIS AND TESTING (Continued)

PINPOINT TEST A: DTC B2332 AND DTC B2328 COLUMN FEEDBACK POTENTIOMETERS CIRCUIT FAILURE (Continued)

TEST CONDITIONS	TEST DETAILS/RESULTS/ACTIONS
A15 CHECK THE STEERING COLUMN/IGNITION/LIGHTING CONTROL MODULE FOR A SHORT TO THE GROUND	
1 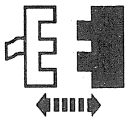 Steering Column/Ignition/Lighting Control Module Connector C288 2 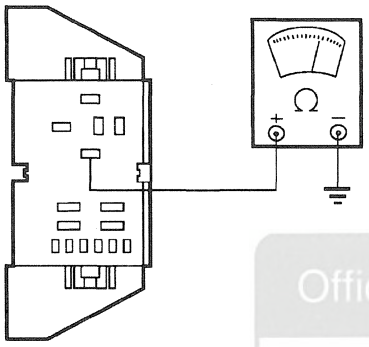 AG0207-A	2 Connect an ohmmeter between the steering column tilt/telescope common motor relay connector Pin C292-86, Circuit 462 (P) and the ground. • Is the resistance 10 K ohms or less? → **Yes** SERVICE Circuit 462 (P) for a short to the ground. RETEST the system. → **No** REPLACE the steering column/ignition/lighting control module. RETEST the system.
A16 CHECK THE RELAY INPUT	
NOTE: This active command will only power the motors for one second.	
1 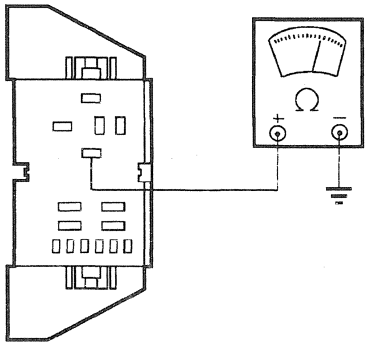 AG0207-A 2 3 Steering Column/Ignition/Lighting Control Module Active Command STEERING COLUMN CONTROL — Trigger TILT DOWN ON	1 Connect an ohmmeter between the steering column tilt/telescope common motor relay connector Pin C292-86, Circuit 462 (P) and the ground.

Official Licensed Ford Motor Company

(Continued)

DIAGNOSIS AND TESTING (Continued)

PINPOINT TEST A: DTC B2332 AND DTC B2328 COLUMN FEEDBACK POTENTIOMETERS CIRCUIT FAILURE (Continued)

TEST CONDITIONS	TEST DETAILS/RESULTS/ACTIONS
A16 CHECK THE RELAY INPUT (Continued)	
	• Is the resistance 5 ohms or less for 1 second after the command is sent? → **Yes** GO to **A18**. → **No** GO to **A17**.
A17 CHECK CIRCUIT 462 (P) FOR AN OPEN	
1 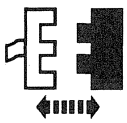 Steering Column/Ignition/Lighting Control Module Connector C288 2 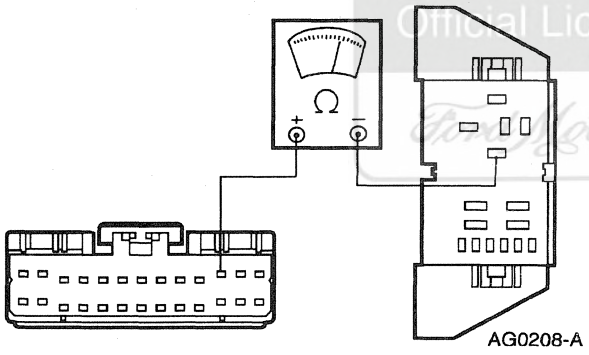 AG0208-A	2 Connect an ohmmeter between the steering column/ignition/lighting control module connector Pin C288-11 and the steering column tilt/telescope common motor relay connector Pin C292-86, Circuit 462 (P). • Is the resistance 5 ohms or less? → **Yes** REPLACE the steering column/ignition/lighting control module. RETEST the system. → **No** SERVICE Circuit 462 (P) for an open. RETEST the system.

Official Licensed Ford Motor Company

(Continued)

DIAGNOSIS AND TESTING (Continued)

PINPOINT TEST A: DTC B2332 AND DTC B2328 COLUMN FEEDBACK POTENTIOMETERS CIRCUIT FAILURE (Continued)

TEST CONDITIONS	TEST DETAILS/RESULTS/ACTIONS
A18 CHECK CIRCUIT 695 (BK/O) FOR AN OPEN	
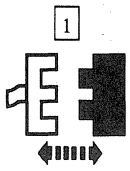 Steering Column Motor Connector C297 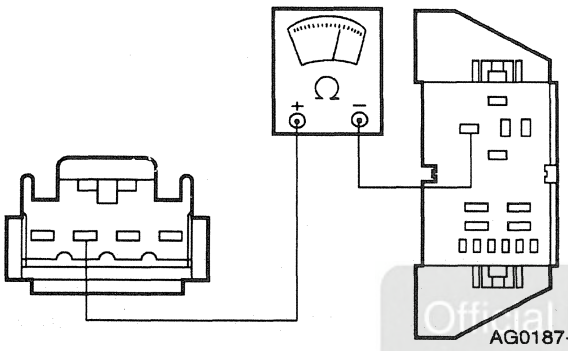 AG0187-A	[2] Connect an ohmmeter between the steering column tilt/telescope common motor relay connector Pin C292-30 and the steering column motor connector Pin C297-2, Circuit 695 (BK/O). • Is the resistance 5 ohms or less? → **Yes** REPLACE the steering column tilt/telescope common motor relay. RETEST the system. → **No** SERVICE Circuit 695 (BK/O) for a short to the ground. RETEST the system.
A19 CHECK CIRCUIT 908 (PK/LG) FOR A SHORT TO THE GROUND	
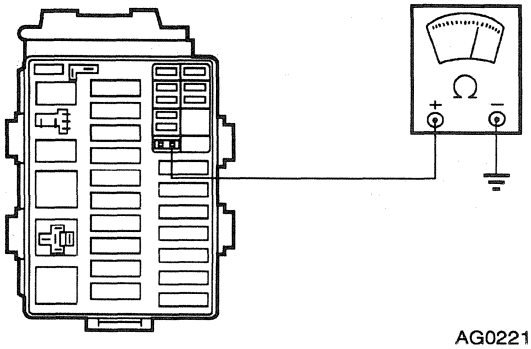 AG0221-A	[1] Connect an ohmmeter between the output cavity of power distribution box Fuse 12 (15A) and the ground. • Is the resistance 10 K ohms or less? → **Yes** GO to **A20**. → **No** GO to **A24**.

Official Licensed Ford Motor Company

(Continued)

DIAGNOSIS AND TESTING (Continued)

PINPOINT TEST A: DTC B2332 AND DTC B2328 COLUMN FEEDBACK POTENTIOMETERS CIRCUIT FAILURE (Continued)

TEST CONDITIONS	TEST DETAILS/RESULTS/ACTIONS
A20 CHECK THE STEERING COLUMN TILT/TELESCOPE COMMON MOTOR RELAY FOR A SHORT TO THE GROUND	
1 Steering Column Tilt/Telescope Common Motor Relay C292 2 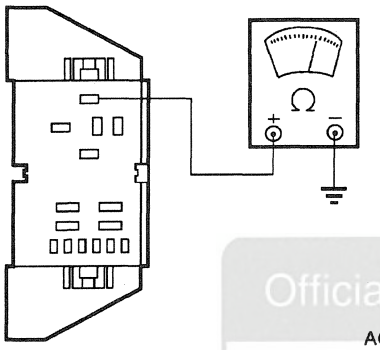 AG0209-A	2 Connect an ohmmeter between the steering column tilt/telescope common motor relay connector Pin C292-85, Circuit 908 (PK/LG) and the ground. • Is the resistance 10 K ohms or less? → **Yes** GO to **A21**. → **No** REPLACE the steering column tilt/telescope common motor relay. RETEST the system.
A21 CHECK THE STEERING COLUMN TILT MOTOR RELAY FOR A SHORT TO THE GROUND	
1 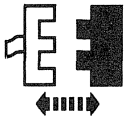 Steering Column Tilt Motor Relay C278 2 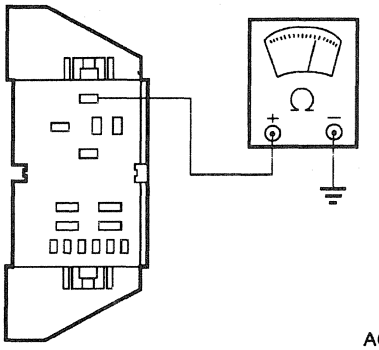 AG0209-A	2 Connect an ohmmeter between the steering column tilt/telescope common motor relay connector Pin C292-85, Circuit 908 (PK/LG) and the ground. • Is the resistance 10 K ohms or less? → **Yes** GO to **A22**. → **No** REPLACE the steering column tilt motor relay. RETEST the system.

Official Licensed Product

(Continued)

DIAGNOSIS AND TESTING (Continued)

PINPOINT TEST A: DTC B2332 AND DTC B2328 COLUMN FEEDBACK POTENTIOMETERS CIRCUIT FAILURE (Continued)

TEST CONDITIONS	TEST DETAILS/RESULTS/ACTIONS
A22 CHECK THE STEERING COLUMN TELESCOPE MOTOR RELAY FOR A SHORT TO THE GROUND	
1 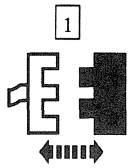 Steering Column Telescope Motor Relay C279 2 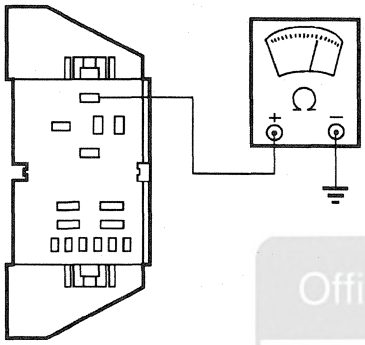 AG0209-A	2 Connect an ohmmeter between the steering column tilt/telescope common motor relay connector Pin C292-85, Circuit 908 (PK/LG) and the ground. • Is the resistance 10 K ohms or less? → **Yes** GO to **A23**. → **No** REPLACE the steering column telescope motor relay. RETEST the system.
A23 CHECK THE STEERING COLUMN/IGNITION LIGHTING CONTROL MODULE	
1 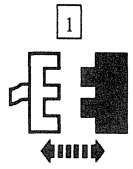 Steering Column/Ignition/Lighting Control Module Connector C289 2 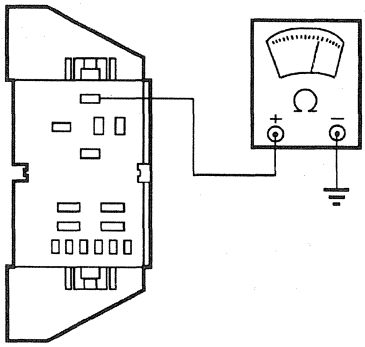 AG0209-A	2 Connect an ohmmeter between the steering column tilt/telescope common motor relay connector Pin C292-85, Circuit 908 (PK/LG) and the ground. • Is the resistance 10 K ohms or less? → **Yes** SERVICE Circuit 908 (PK/LG) for a short to the ground. RETEST the system. → **No** REPLACE the steering column/ignition/lighting control module. RETEST the system.

(Continued)

Official Licensed Product

DIAGNOSIS AND TESTING (Continued)

PINPOINT TEST A: DTC B2332 AND DTC B2328 COLUMN FEEDBACK POTENTIOMETERS CIRCUIT FAILURE (Continued)

TEST CONDITIONS	TEST DETAILS/RESULTS/ACTIONS
A24 CHECK CIRCUIT 695 (BK/O) FOR A SHORT TO THE GROUND	
1 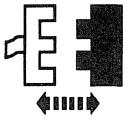 Steering Column Tilt/Telescope Common Motor Relay C292 2 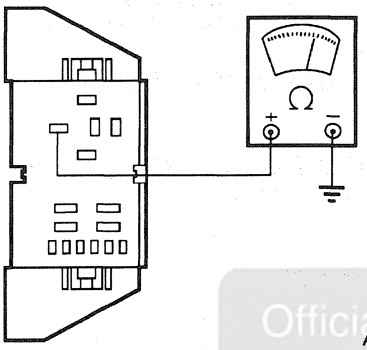 AG0210-A	2 Connect an ohmmeter between the steering column tilt/telescope common motor relay connector Pin C292-30, Circuit 695 (BK/O) and the ground. • Is the resistance 10 K ohms or less? → **Yes** GO to **A25**. → **No** GO to **A29**.
A25 CHECK FOR MOTOR SHORT	
1 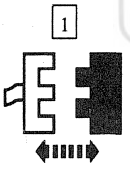 Steering Column Motor Connector C297 2 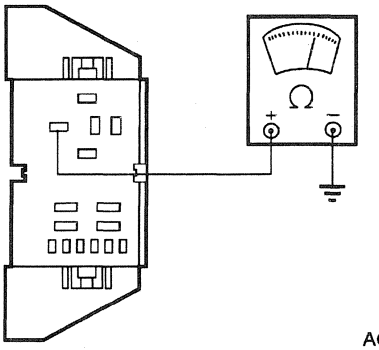 AG0210-A	2 Connect an ohmmeter between the steering column tilt/telescope common motor relay connector Pin C292-30, Circuit 695 (BK/O) and the ground. • Is the resistance 10 K ohms or less? → **Yes** SERVICE Circuit 695 (BK/O) for a short to the ground. RETEST the system. → **No** GO to **A26**.

Official Licensed Product
Ford Motor Company

(Continued)

DIAGNOSIS AND TESTING (Continued)

PINPOINT TEST A: DTC B2332 AND DTC B2328 COLUMN FEEDBACK POTENTIOMETERS CIRCUIT FAILURE (Continued)

TEST CONDITIONS	TEST DETAILS/RESULTS/ACTIONS
A26 CHECK CIRCUIT 698 (R) FOR A SHORT TO THE GROUND	
1 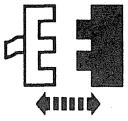 Steering Column/Ignition/Lighting Control Module Connector C289 2 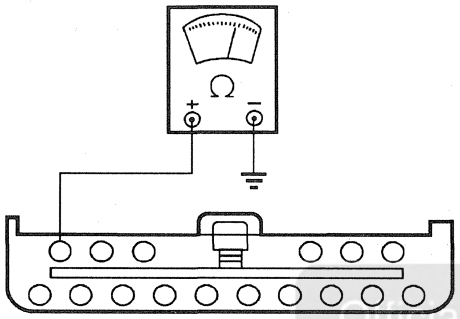 AG0194-A	2 Connect an ohmmeter between the steering column/ignition/lighting control module connector Pin C289-16, Circuit 698 (R) and the ground. • Is the resistance 10 K ohms or less? → **Yes** SERVICE Circuit 698 (R) for short to ground. RETEST the system. → **No** GO to **A27**.
A27 CHECK CIRCUIT 216 (T/R) FOR A SHORT TO THE GROUND	
1 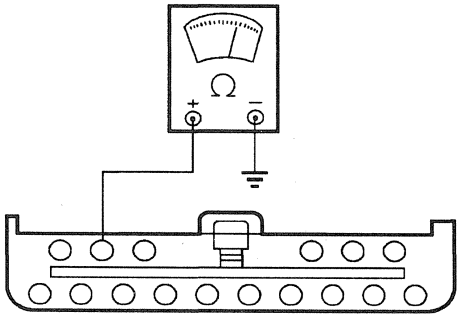 AG0185-A	1 Connect an ohmmeter between the steering column/ignition/lighting control module connector Pin C289-15, Circuit 216 (T/R) and the ground. • Is the resistance 10 K ohms or less? → **Yes** SERVICE Circuit 216 (T/R) for short to ground. RETEST the system. → **No** GO to **A28**.

Official Licensed Product
Ford Motor Company

(Continued)

DIAGNOSIS AND TESTING (Continued)

PINPOINT TEST A: DTC B2332 AND DTC B2328 COLUMN FEEDBACK POTENTIOMETERS CIRCUIT FAILURE (Continued)

TEST CONDITIONS	TEST DETAILS/RESULTS/ACTIONS
A28 CHECK THE TILT MOTOR FOR A SHORT TO THE GROUND	
1 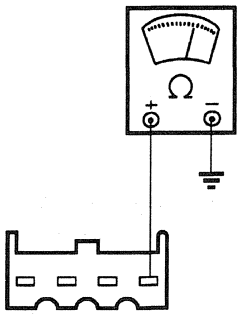 AG0153-A	1 Connect an ohmmeter between the motor side of the steering column motor connector Pin C297-1, Circuit 698 (R) and the ground. • Is the resistance 10 K ohms or less? → **Yes** REPLACE the steering column tilt motor. RETEST the system. → **No** REPLACE the steering column telescope motor. RETEST the system.
A29 CHECK CIRCUIT 1221 (W/O) FOR A SHORT TO THE GROUND	
1 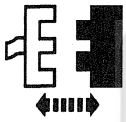 Steering Column Tilt Motor Relay C278 2 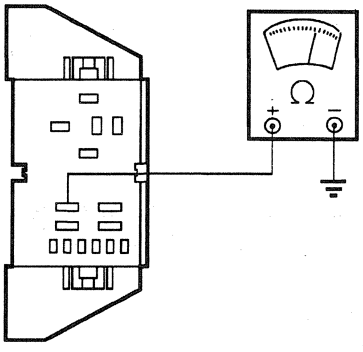 AG0220-A	2 Connect an ohmmeter between the steering column tilt motor relay connector Pin C278-3, Circuit 1221 (W/O) and the ground. • Is the resistance 10 K ohms or less? → **Yes** GO to **A30**. → **No** GO to **A31**.

Official Licensed Product
Ford Motor Company

(Continued)

DIAGNOSIS AND TESTING (Continued)

PINPOINT TEST A: DTC B2332 AND DTC B2328 COLUMN FEEDBACK POTENTIOMETERS CIRCUIT FAILURE (Continued)

TEST CONDITIONS	TEST DETAILS/RESULTS/ACTIONS
A30 ISOLATE THE SHORT TO THE GROUND	
1 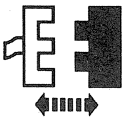 Steering Column/Ignition/Lighting Control Module Connector C289 2 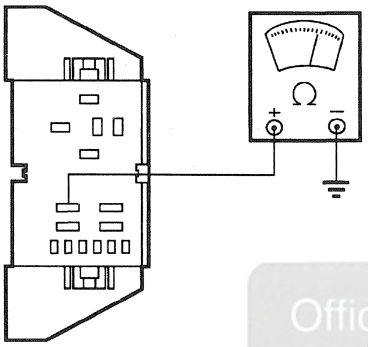 AG0220-A	2 Connect an ohmmeter between the steering column tilt motor relay connector Pin C278-3, Circuit 1221 (W/O) and the ground. • Is the resistance 10 K ohms or less? → **Yes** SERVICE Circuit 1221 (W/O) for a short to the ground. RETEST the system. → **No** REPLACE the steering column/ignition/lighting control module. RETEST the system.
A31 CHECK CIRCUIT 1223 (GY/R) FOR A SHORT TO THE GROUND	
1 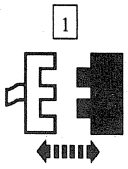 Steering Column Telescope Motor Relay C279 2 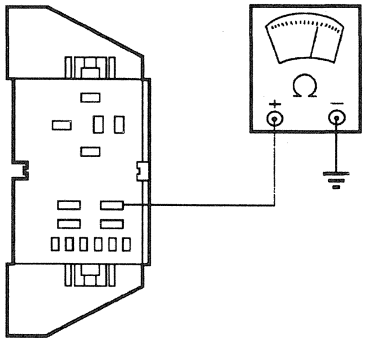 AG0193-A	2 Connect an ohmmeter between the steering column telescope motor relay connector Pin C279-3, Circuit 1223 (GY/R) and the ground. • Is the resistance 10 K ohms or less? → **Yes** GO to **A32**. → **No** GO to **A33**.

Official Licensed Ford Motor Company

(Continued)

DIAGNOSIS AND TESTING (Continued)

PINPOINT TEST A: DTC B2332 AND DTC B2328 COLUMN FEEDBACK POTENTIOMETERS CIRCUIT FAILURE (Continued)

TEST CONDITIONS	TEST DETAILS/RESULTS/ACTIONS
A32 CHECK THE CONTROL MODULE	
1 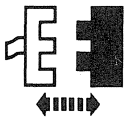 Steering Column/Ignition/Lighting Control Module Connector C289 2 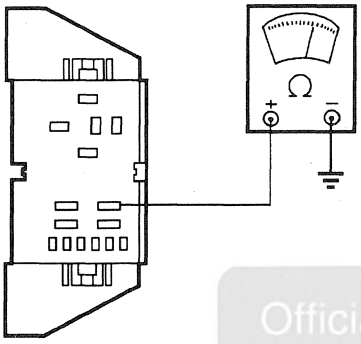 AG0193-A	2 Connect an ohmmeter between the steering column telescope motor relay connector Pin C279-3, Circuit 1223 (GY/R) and the ground. • Is the resistance 10 K ohms or less? → **Yes** SERVICE Circuit 1223 (GY/R) for a short to the ground. RETEST the system. → **No** REPLACE the steering column/ignition/lighting control module. RETEST the system.
A33 CHECK CIRCUIT 750 (Y/LG) FOR A SHORT TO THE GROUND	
1 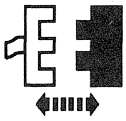 Steering Column/Ignition/Lighting Control Module Connector C289 3 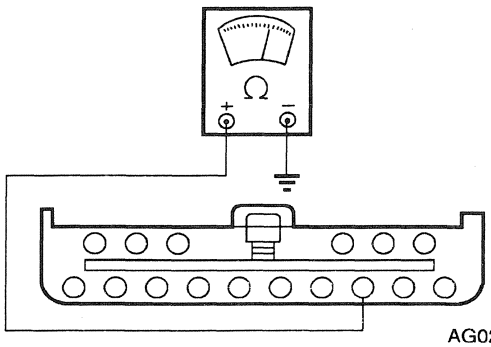 AG0211-A	2 Make sure the parking brake is released. 3 Connect an ohmmeter between the steering column/ignition/lighting control module connector Pin C289-3, Circuit 750 (Y/LG) and the ground. • Is the resistance 10 K ohms or less? → **Yes** GO to **A34**. → **No** GO to **A35**.

(Continued)

DIAGNOSIS AND TESTING (Continued)

PINPOINT TEST A: DTC B2332 AND DTC B2328 COLUMN FEEDBACK POTENTIOMETERS CIRCUIT FAILURE (Continued)

TEST CONDITIONS	TEST DETAILS/RESULTS/ACTIONS
A34 CHECK THE AUTO PARK BRAKE RELEASE SOLENOID FOR A SHORT	
1 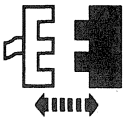 Auto Park Brake Release Solenoid Connector C2003 2 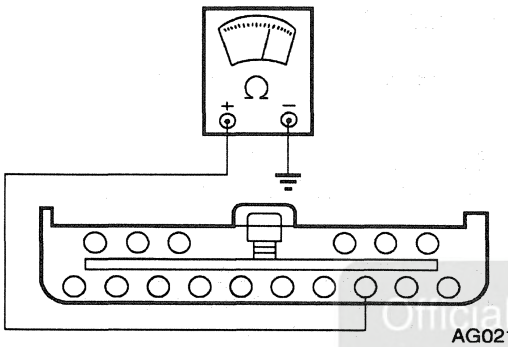 AG0211-A	2 Connect an ohmmeter between the steering column/ignition/lighting control module connector Pin C289-3, Circuit 750 (Y/LG) and the ground. • Is the resistance 10 K ohms or less? → **Yes** SERVICE Circuit 750 (Y/LG) for a short to the ground. RETEST the system. → **No** REPLACE the auto park brake release solenoid. RETEST the system.
A35 CHECK THE INTERNAL CIRCUITRY	
1 Steering Column/Ignition/Lighting Control Module Connector C289 2 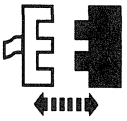 Auto Park Brake Release Solenoid Connector C2003 3 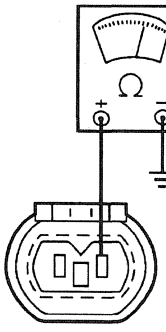 AH0179-A	3 Connect an ohmmeter between the auto park brake release solenoid connector C2003, Circuit 750 (Y/LG) and the ground. • Is the resistance 10 K ohms or less? → **Yes** REPLACE the steering column/ignition/lighting control module. RETEST the system. → **No** GO to **A36**.

(Continued)

Official Licensed Product Ford Motor Company

DIAGNOSIS AND TESTING (Continued)

PINPOINT TEST A: DTC B2332 AND DTC B2328 COLUMN FEEDBACK POTENTIOMETERS CIRCUIT FAILURE (Continued)

TEST CONDITIONS	TEST DETAILS/RESULTS/ACTIONS
A36 CHECK CIRCUIT 1037 (P/LG) FOR A SHORT TO THE GROUND	
1 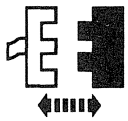 LH and RH Outside Rearview Mirror Ground Illumination Bulbs 2 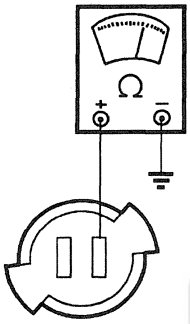 AG0224-A	2 Connect an ohmmeter between the LH outside rear view mirror ground illumination lamp socket, Circuit 1037 (P/LG) and the ground. • Is the resistance 10 K ohms or less? → **Yes** GO to **A37**. → **No** REPLACE the steering column/ignition/lighting control module. RETEST the system.
A37 CHECK THE GROUND ILLUMINATION OUTPUT FOR A SHORT	
1 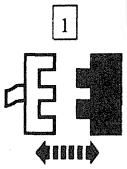 Steering Column/Ignition/Lighting Control Module Connector C289 2 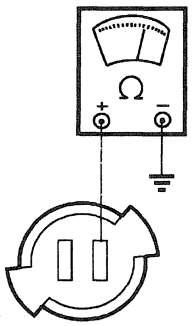 AG0224-A	2 Connect an ohmmeter between the LH outside rear view mirror ground illumination lamp socket, Circuit 1037 (P/LG) and the ground. • Is the resistance 10 K ohms or less? → **Yes** SERVICE Circuit 1037 (P/LG) for short to ground. RETEST the system. → **No** REPLACE the steering column/ignition/lighting control module. RETEST the system.

Official Licensed Product
Ford Motor Company

DIAGNOSIS AND TESTING (Continued)

PINPOINT TEST B: NO COMMUNICATION WITH THE STEERING COLUMN/IGNITION/LIGHTING (SCIL) CONTROL MODULE

TEST CONDITIONS	TEST DETAILS/RESULTS/ACTIONS
B1 CHECK CIRCUIT 875 (BK/LB) FOR AN OPEN	
1 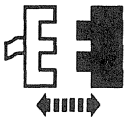 Steering Column/Ignition/Lighting Control Module Connector C288 2 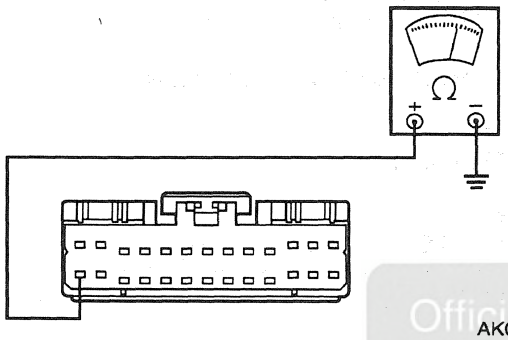 AK0313-B	2 Connect an ohmmeter between the steering column/ignition/lighting control module connector Pin C288-14, Circuit 875 (BK/LB) and the ground. • Is the resistance 5 ohms or less? → **Yes** GO to **B2**. → **No** SERVICE Circuit 875 (BK/LB) for an open. RESTORE vehicle. REPEAT the steering column/ignition/lighting control module self test.
B2 CHECK CIRCUIT 57 (BK) FOR AN OPEN	
1 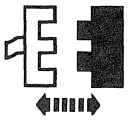 Steering Column/Ignition/Lighting Control Module Connector C287 2 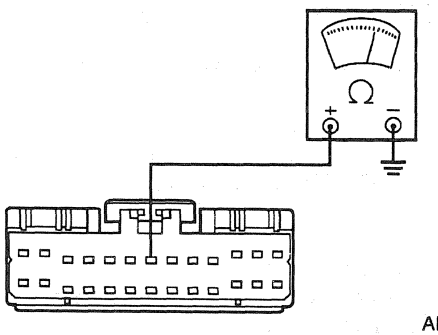 AK0314-B	2 Connect an ohmmeter between the steering column/ignition/lighting control module connector Pin C287-7, Circuit 57 (BK) and the ground. • Is the resistance 5 ohms or less? → **Yes** GO to **B3**. → **No** SERVICE Circuit 57 (BK) for an open. RESTORE the vehicle. REPEAT the steering column/ignition/lighting control module self test.

Official Licensed Product
Ford Motor Company

(Continued)

DIAGNOSIS AND TESTING (Continued)

PINPOINT TEST B: NO COMMUNICATION WITH THE STEERING COLUMN/IGNITION/LIGHTING (SCIL) CONTROL MODULE (Continued)

TEST CONDITIONS	TEST DETAILS/RESULTS/ACTIONS
B3 CHECK FOR THE B+ SUPPLY ON THE STEERING COLUMN/IGNITION/LIGHTING CONTROL MODULE CONNECTOR C287	
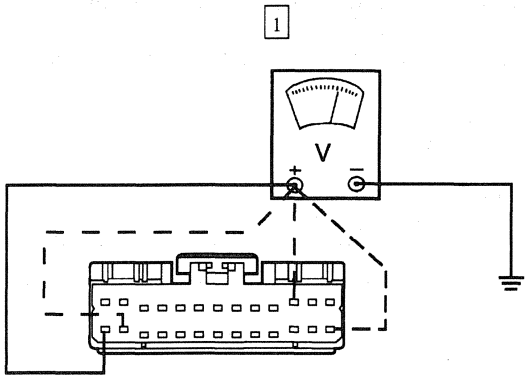 AK1260-A	1 Connect a voltmeter to each of the following steering column/ignition/lighting control module connector C287 Pins. Note the voltage reading at each Pin: • C287-14, Circuit 906 (R/O) • C287-26, Circuit 19 (LB/R) • C287-15, Circuit 1055 (W/LG) • C287-11, Circuit 1056 (DB/LG) • Is the voltage reading on any circuit B+? → **Yes** GO to Communication Network Diagnostics in Section 418-00 to diagnose the network concern. → **No** SERVICE as required. GO to **B4**.
B4 CHECK FOR THE B+ SUPPLY ON THE STEERING COLUMN/IGNITION/LIGHTING CONTROL MODULE CONNECTOR C289	
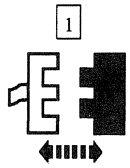 Steering Column/Ignition/Lighting Control Module Connector C289 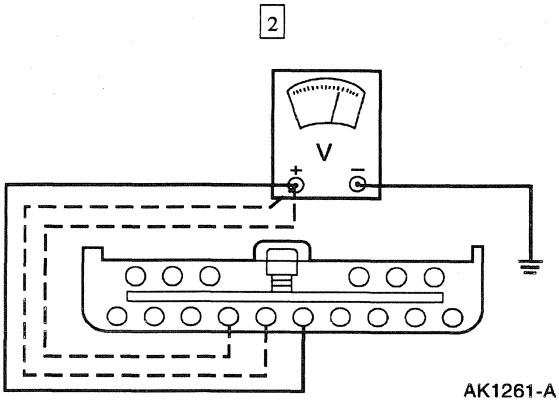 AK1261-A	2 Connect a voltmeter to each of the following steering column/ignition/lighting control module connector C289 Pins. Note the voltage reading at each pin: • C289-5, Circuit 1058 (BR/W) • C289-6, Circuit 1057 (O/BK) • C289-7, Circuit 908 (PK/LG) • Is voltage reading on any circuit B+? → **Yes** GO to Communication Network Diagnostics in Section 418-00 to diagnose the network concern. → **No** SERVICE as required. RESTORE the vehicle. REPEAT the steering column/ignition/lighting control module self test.

Official Licensed Product
Ford Motor Company

DIAGNOSIS AND TESTING (Continued)

PINPOINT TEST C: THE STEERING COLUMN TILT ADJUSTMENT IS INOPERATIVE

TEST CONDITIONS	TEST DETAILS/RESULTS/ACTIONS
C1 CHECK THE STEERING COLUMN TELESCOPE ADJUSTMENT	
	[1] Activate the steering column adjustment switch to the telescope in and telescope out position. • Does the steering column telescope in and out? → **Yes** GO to **C2**. → **No** GO to Pinpoint Test E.
C2 CHECK THE PID TILT	
[1] 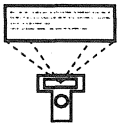 Steering Column/Ignition/Lighting Control Module PID TILT	[2] Activate the steering column adjustment switch to the tilt up then the tilt down position, while monitoring the PID TILT. • Does the PID TILT read OFF when the switch is active? → **Yes** REPLACE the multi-function switch. RETEST the system. → **No** GO to **C3**.

Official License Ford Motor Company

(Continued)

DIAGNOSIS AND TESTING (Continued)

PINPOINT TEST C: THE STEERING COLUMN TILT ADJUSTMENT IS INOPERATIVE (Continued)

TEST CONDITIONS	TEST DETAILS/RESULTS/ACTIONS
C3 CHECK CIRCUIT 698 (R) FOR A SHORT TO THE GROUND	
1 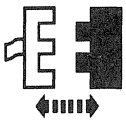 Steering Column Motor Connector C297 2 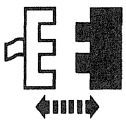 Steering Column/Ignition/Lighting Control Module Connector C289 3 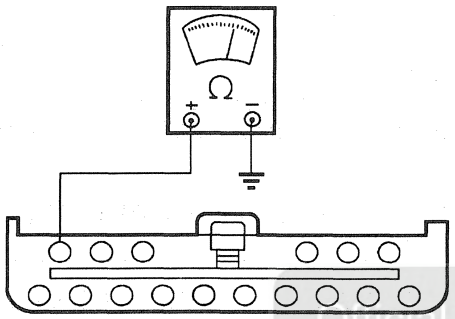 AG0194-A	3 Connect an ohmmeter between the steering column/ignition/lighting control module connector Pin C289-16, Circuit 698 (R) and the ground. • Is the resistance 10 K ohms or less? → **Yes** SERVICE Circuit 698 (R) for a short to the ground. RETEST the system. → **No** GO to **C4**.
C4 CHECK THE STEERING COLUMN/IGNITION/LIGHTING CONTROL MODULE	
1 Steering Column/Ignition/Lighting Control Module Connector C289 2 Steering Column/Ignition/Lighting Control Module Self-Test	• Is DTC B2332 retrieved? → **Yes** GO to **C5**. → **No** REPLACE the steering column/ignition/lighting control module. RETEST the system.
C5 CHECK THE TILT MOTOR	
NOTE: This active command will only power motor for one second.	
	1 Remove the tilt motor from the steering column.

(Continued)

Official Licensed Product Ford Motor Company

DIAGNOSIS AND TESTING (Continued)

PINPOINT TEST C: THE STEERING COLUMN TILT ADJUSTMENT IS INOPERATIVE (Continued)

TEST CONDITIONS	TEST DETAILS/RESULTS/ACTIONS
C5 CHECK THE TILT MOTOR (Continued)	
2 Steering Column Motor Connector C297 3 Steering Column/Ignition/Lighting Control Module Active Command STEERING COLUMN CONTROL 4 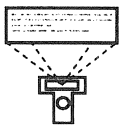 Trigger TILT UP On The TILT DOWN On	• Does the tilt motor spin for one second after either command? → **Yes** SERVICE the steering column for stuck or binding mechanism. RETEST the system. → **No** REPLACE the tilt motor. RETEST the system.

PINPOINT TEST D: THE STEERING COLUMN TELESCOPE ADJUSTMENT IS INOPERATIVE

TEST CONDITIONS	TEST DETAILS/RESULTS/ACTIONS
D1 CHECK THE STEERING COLUMN TILT ADJUSTMENT	
	1 Activate the steering column adjustment switch to the tilt up and tilt down positions. • Does the steering column tilt adjustment function? → **Yes** GO to **D2**. → **No** GO to Pinpoint Test E.

(Continued)

DIAGNOSIS AND TESTING (Continued)

PINPOINT TEST D: THE STEERING COLUMN TELESCOPE ADJUSTMENT IS INOPERATIVE (Continued)

TEST CONDITIONS	TEST DETAILS/RESULTS/ACTIONS
D2 CHECK THE PID TELESCP	
1 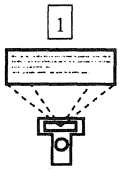 Steering Column/Ignition/Lighting Control Module PID TELESCP	2 Activate the steering column adjustment switch to the telescope in and the telescope out position. • Does the PID TELESCP read OFF when the switch is active? → **Yes** REPLACE the multi-function switch. RETEST the system. → **No** GO to **D3**.
D3 CHECK CIRCUIT 216 (T/R) FOR A SHORT TO THE GROUND	
1 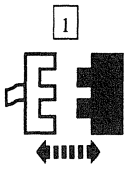 Steering Column Motor Connector C297 2 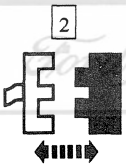 Steering Column/Ignition/Lighting Control Module Connector C289 3 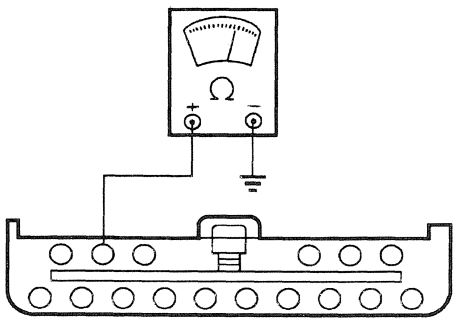 AG0185-A	3 Connect an ohmmeter between the steering column/ignition/lighting control module connector Pin C289-15, Circuit 216 (T/R) and the ground. • Is the resistance 10 K ohms or less? → **Yes** SERVICE Circuit 216 (T/R) for a short to the ground. RETEST the system. → **No** GO to **D4**.

(Continued)

DIAGNOSIS AND TESTING (Continued)

PINPOINT TEST D: THE STEERING COLUMN TELESCOPE ADJUSTMENT IS INOPERATIVE (Continued)

TEST CONDITIONS	TEST DETAILS/RESULTS/ACTIONS
D4 CHECK THE STEERING COLUMN/IGNITION/LIGHTING CONTROL MODULE	
1 Steering Column/Ignition/Lighting Control Module Connector C289 2 Steering Column/Ignition/Lighting Control Module Self-Test	• Is DTC B2328 retrieved? → **Yes** GO to **D5**. → **No** REPLACE the steering column/ignition/lighting control module. RETEST the system.
D5 CHECK THE TELESCOPE MOTOR	
NOTE: This active command will only power motor for one second.	
2 Steering Column Motor Connector C297 3 Steering Column/Ignition/Lighting Control Module Active Command STEERING COLUMN CONTROL 4 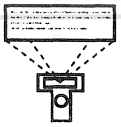 Trigger TELESCP IN On Then TELESCP OUT On	1 Remove the telescope motor from the steering column. • Does the telescope motor spin for one second after either command? → **Yes** SERVICE the steering column for a stuck or binding mechanism. RETEST the system. → **No** REPLACE the telescope motor. RETEST the system.

Official Licensed Product Ford Motor Company

DIAGNOSIS AND TESTING (Continued)

PINPOINT TEST E: THE STEERING COLUMN TILT AND TELESCOPE ADJUSTMENT IS INOPERATIVE

TEST CONDITIONS	TEST DETAILS/RESULTS/ACTIONS
E1 CHECK THE SELF TEST RESULTS	
1 Steering Column/Ignition/Lighting Control Module Self-Test	• Are DTCs B2332 and B2328 retrieved? → **Yes** GO to Pinpoint Test A. → **No** GO to **E2**.
E2 CHECK THE PID TILT	
1 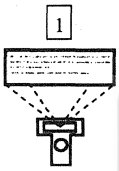 Steering Column/Ignition/Lighting Control Module PID TILT	2 Activate the steering column adjustment switch to the Tilt Up and Tilt Down position while monitoring the PID TILT. • Does the PID TILT read UP and DOWN? → **Yes** REPLACE the steering column/ignition/lighting control module. RETEST the system. → **No** GO to **E3**.

Official Licensed Product
Ford Motor Company

(Continued)

DIAGNOSIS AND TESTING (Continued)

PINPOINT TEST E: THE STEERING COLUMN TILT AND TELESCOPE ADJUSTMENT IS INOPERATIVE (Continued)

TEST CONDITIONS	TEST DETAILS/RESULTS/ACTIONS
E3 CHECK THE PID TELESCP	
1 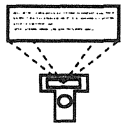 Steering Column/Ignition/Lighting Control Module PID TELESCP	2 Activate the steering column adjustment switch to the Telescope In and Telescope Out position while monitoring the PID TELESCP. • Does the PID TELESCP read IN and OUT? → **Yes** REPLACE the steering column/ignition/lighting control module. RETEST the system. → **No** GO to **E4**.
E4 CHECK CIRCUIT 998 (Y/R) FOR A SHORT TO THE GROUND	
1 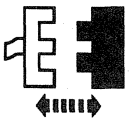 Steering Column/Ignition/Lighting Control Module Connector C286 2 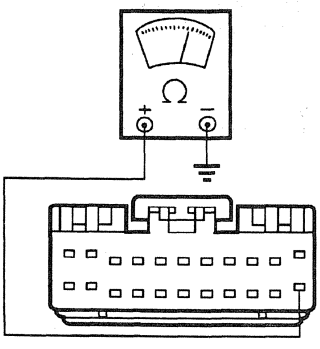 AG0212-A	2 Connect an ohmmeter between the steering column/ignition/lighting control module connector Pin C286-22, Circuit 998 (Y/R) and the ground. • Is the resistance 10 K ohms or less? → **Yes** GO to **E5**. → **No** GO to **E7**.

(Continued)

Official Licensed Product Ford Motor Company

DIAGNOSIS AND TESTING (Continued)

PINPOINT TEST E: THE STEERING COLUMN TILT AND TELESCOPE ADJUSTMENT IS INOPERATIVE (Continued)

TEST CONDITIONS	TEST DETAILS/RESULTS/ACTIONS
E5 CHECK THE STEERING COLUMN ADJUSTMENT SWITCH FOR A SHORT TO THE GROUND	
1 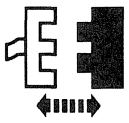 Multi-Function Switch Connector C215 2 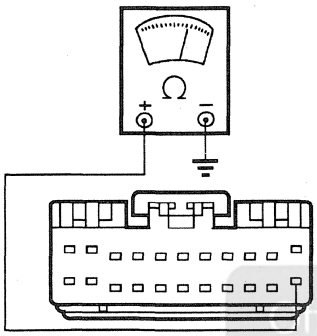 AG0212-A	2 Connect an ohmmeter between the steering column/ignition/lighting control module connector Pin C286-22, Circuit 998 (Y/R) and the ground. • Is the resistance 10 K ohms or less? → **Yes** SERVICE Circuit 998 (Y/R) for a short to the ground. RETEST the system. → **No** GO to **E6**.
E6 CHECK CIRCUIT 997 (BR) FOR A SHORT TO THE GROUND	
1 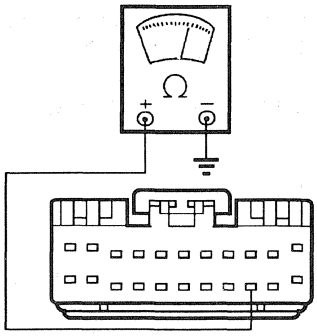 AG0225-A	1 Connect an ohmmeter between the steering column/ignition/lighting control module connector Pin C286-20, Circuit 997 (BR) and the ground. • Is the resistance 10 K ohms or less? → **Yes** SERVICE Circuit 997 (BR) for a short to the ground. RETEST the system. → **No** REPLACE the multi-function switch. RETEST the system.

Official Licensed Product Ford Motor Company

(Continued)

DIAGNOSIS AND TESTING (Continued)

PINPOINT TEST E: THE STEERING COLUMN TILT AND TELESCOPE ADJUSTMENT IS INOPERATIVE (Continued)

TEST CONDITIONS	TEST DETAILS/RESULTS/ACTIONS
E7 CHECK CIRCUIT 998 (Y/R) FOR AN OPEN	
1 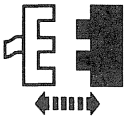 Multi-Function Switch Connector C215 2 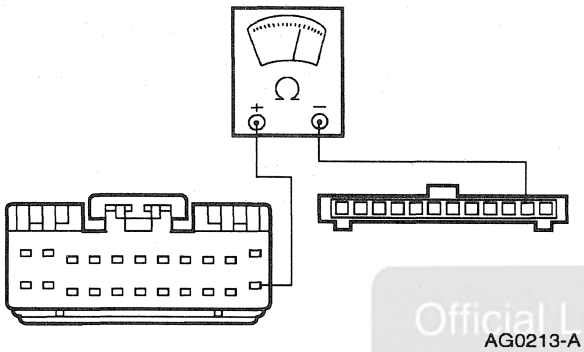 AG0213-A	2 Connect an ohmmeter between the steering column/ignition/lighting control module connector Pin C286-22 and the multi-function switch connector Pin C215-11, Circuit 998 (Y/R). • Is the resistance less than 5 ohms? → **Yes** GO to **E8**. → **No** SERVICE Circuit 998 (Y/R) for an open. RETEST the system.
E8 CHECK CIRCUIT 997 (BR) FOR AN OPEN	
1 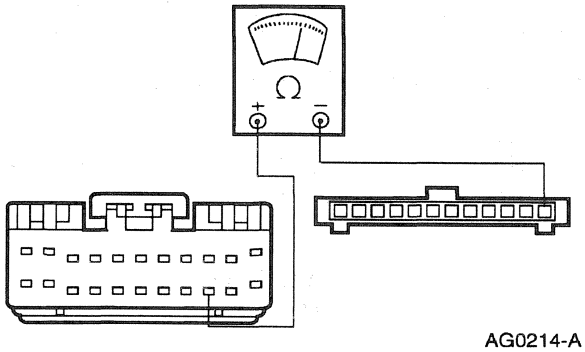 AG0214-A	1 Connect an ohmmeter between the steering column/ignition/lighting control module connector Pin C286-20 and the multi-function switch connector Pin C215-12, Circuit 997 (BR). • Is the resistance less than 5 ohms? → **Yes** GO to **E9**. → **No** SERVICE Circuit 997 (BR) for an open. RETEST the system.

Official Licensed Product
Ford Motor Company

(Continued)

DIAGNOSIS AND TESTING (Continued)

PINPOINT TEST E: THE STEERING COLUMN TILT AND TELESCOPE ADJUSTMENT IS INOPERATIVE (Continued)

TEST CONDITIONS	TEST DETAILS/RESULTS/ACTIONS
E9 CHECK THE STEERING COLUMN ADJUSTMENT SWITCH	
1 Multi-Function Switch Connector C215 2 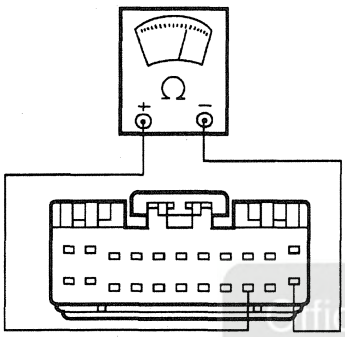 AG0215-A	2 Connect an ohmmeter between the steering column/ignition/lighting control module connector Pin C286-22, Circuit 998 (Y/R) and the Pin C286-20, Circuit 997 (BR). 3 Actuate the steering column adjustment switch to the OUT position. • Is the resistance reading between 2.0 K - 2.4 K ohms? → **Yes** REPLACE the steering column/ignition/lighting control module. RETEST the system. → **No** REPLACE the multi-function switch. RETEST the system.

Official Licensed Product
Ford Motor Co.

REMOVAL AND INSTALLATION

Ignition Switch Lock Cylinder

Removal

1. Disconnect the battery ground cable; refer to Section 414-01.

REMOVAL AND INSTALLATION (Continued)

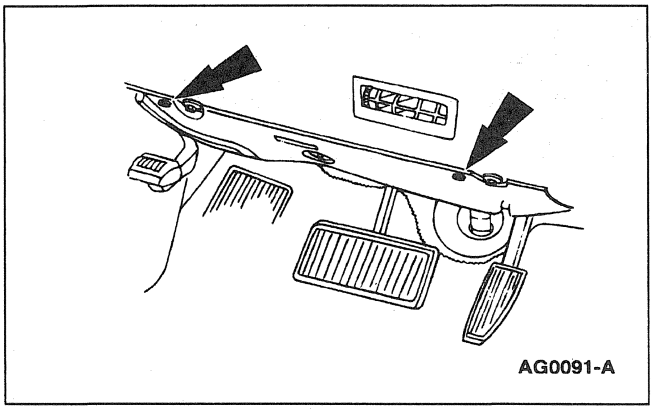
AG0091-A

2. Remove the two lower instrument panel insulator push pins.

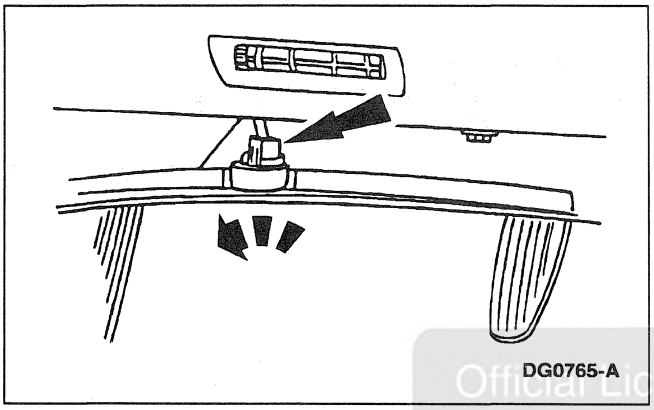
DG0765-A

3. Remove the courtesy light and place the lower instrument panel insulator out of way.

Official Licensed Product
Ford Motor Company

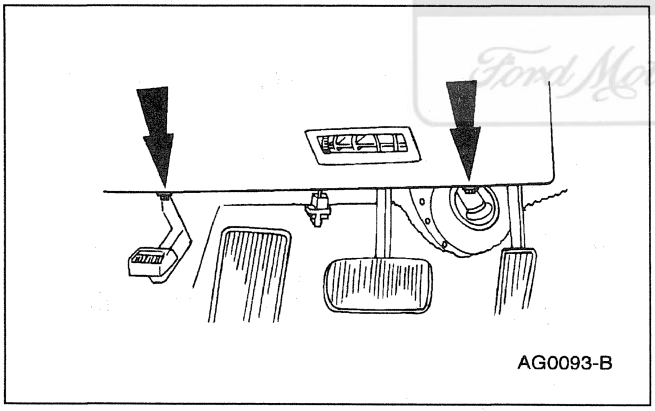
AG0093-B

4. Remove the instrument panel steering column cover retaining screws and place the instrument panel steering column cover (04459) panel out of way.

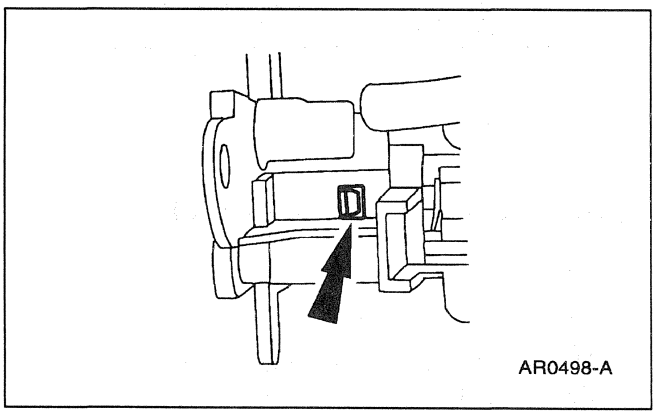
AR0498-A

5. **NOTE:** The tab is located between the sensor end and an ignition switch cylinder bracket.

   Depress the ignition switch lock cylinder tab and pull out the ignition switch lock cylinder.

REMOVAL AND INSTALLATION (Continued)

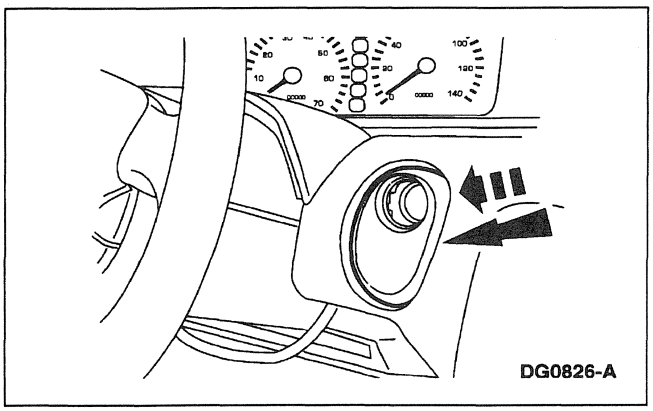

6. Remove the ignition switch bezel.

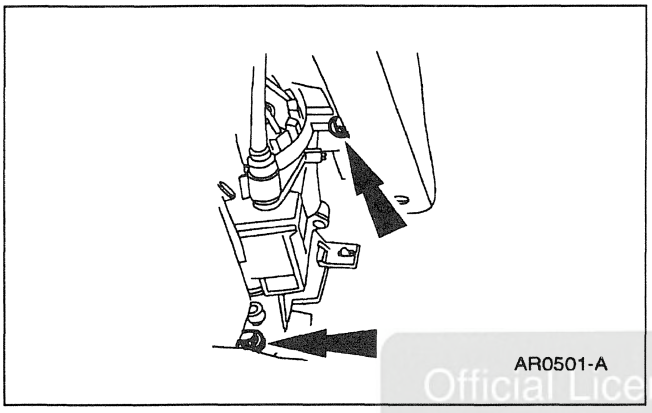

7. Remove the ignition switch housing retaining screws.

Official Licensed Product
Ford Motor Company

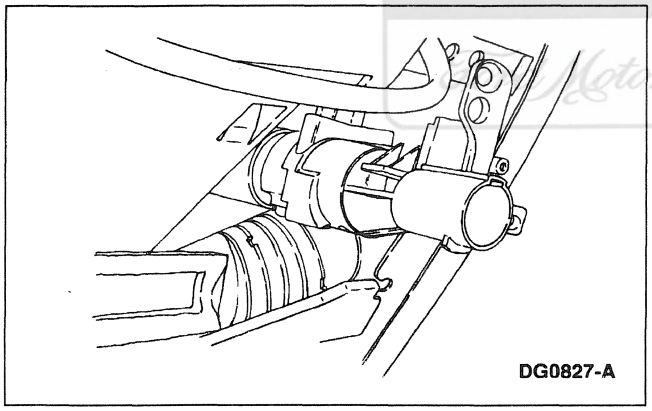

8. Disconnect the ignition switch electrical connectors.

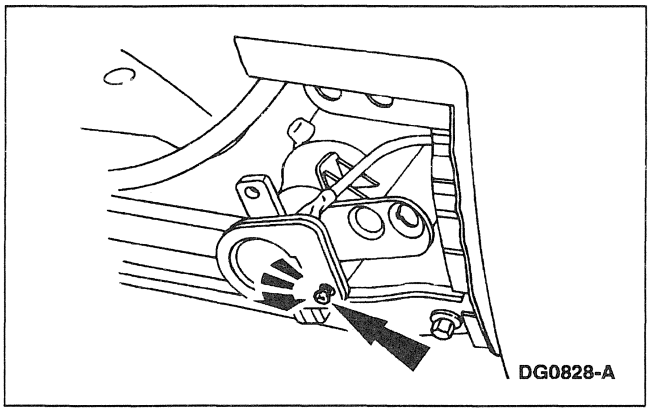

9. Remove the antenna retaining screw.

REMOVAL AND INSTALLATION (Continued)

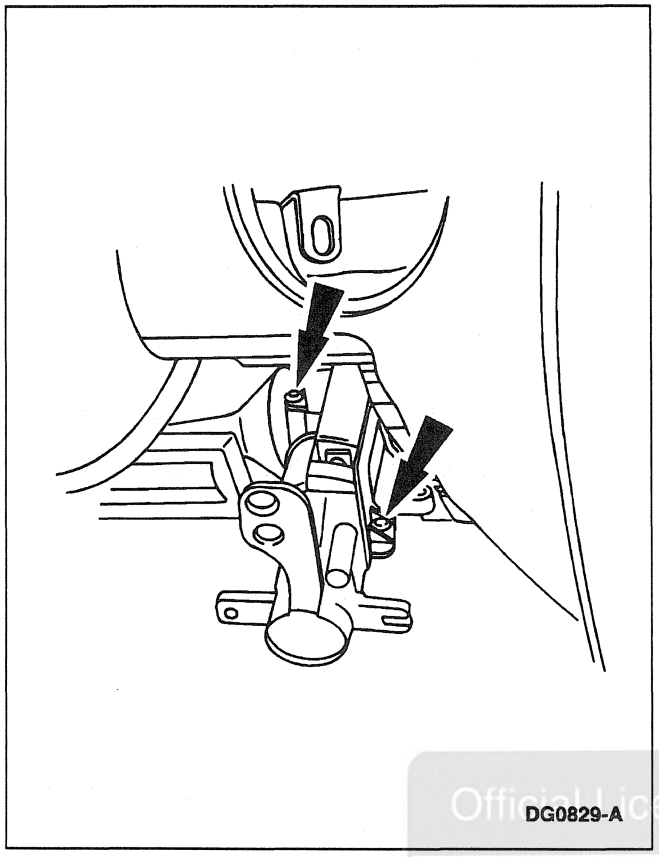

10. Remove (2) shift interlock solenoid retaining screws.

Official Licensed Product
Ford Motor Company

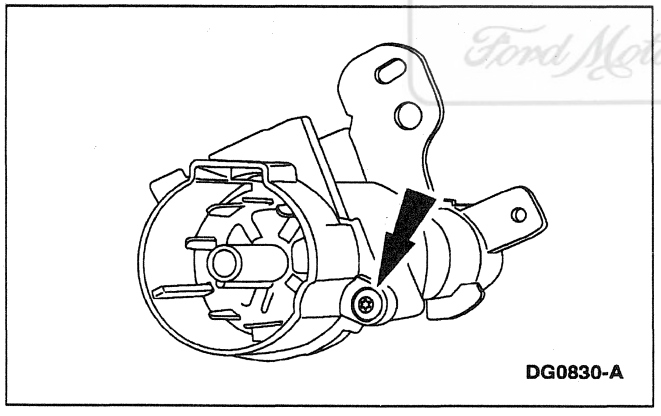

11. Remove one ignition switch cylinder retaining screw.

Installation

1. Follow the removal procedure in reverse order.

REMOVAL AND INSTALLATION (Continued)

Wheel

Special Tool(s)

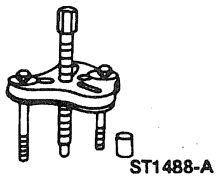 ST1488-A	Steering Wheel Puller 211-014 (T67L-3600-A)

Removal

WARNING: ALWAYS WEAR SAFETY GLASSES WHEN SERVICING AN AIR BAG VEHICLE AND WHEN HANDLING AN AIR BAG.

WARNING: CARRY A LIVE AIR BAG MODULE WITH THE AIR BAG AND TRIM COVER POINTED AWAY FROM YOUR BODY. THIS WILL REDUCE THE RISK OF INJURY IN THE EVENT OF AN ACCIDENTAL DEPLOYMENT.

WARNING: DO NOT SET A LIVE AIR BAG MODULE DOWN WITH THE TRIM COVER FACE DOWN.

WARNING: AFTER DEPLOYMENT, THE AIR BAG SURFACE MAY CONTAIN DEPOSITS OF SODIUM HYDROXIDE, A PRODUCT OF THE GAS GENERANT COMBUSTION THAT IS IRRITATING TO THE SKIN. WASH YOUR HANDS WITH SOAP AND WATER AFTER HANDLING A DEPLOYED AIR BAG.

WARNING: NEVER PROBE THE CONNECTORS ON THE AIR BAGS. DOING SO CAN RESULT IN AIR BAG DEPLOYMENT WHICH CAN RESULT IN PERSONAL INJURY.

WARNING: AIR BAG MODULES WITH DISCOLORED OR DAMAGED COVERS OR DEPLOYMENT DOORS MUST BE REPLACED, NOT REPAINTED.

Official Licensed Product
Ford Motor Company

REMOVAL AND INSTALLATION (Continued)

WARNING: VEHICLE SENSOR ORIENTATION IS CRITICAL FOR PROPER SYSTEM OPERATION. IF A VEHICLE EQUIPPED WITH AN AIR BAG SYSTEM IS INVOLVED IN A COLLISION, INSPECT THE SENSOR MOUNTING BRACKET AND WIRING PIGTAIL FOR DEFORMATION. IF DAMAGED, THE SENSOR MUST BE REPLACED WHETHER OR NOT THE AIR BAG IS DEPLOYED.

1. **WARNING: TO AVOID ACCIDENTAL DEPLOYMENT AND POSSIBLE PERSONAL INJURY, THE BACKUP POWER SUPPLY MUST BE DEPLETED BEFORE REPAIRING OR REPLACING ANY AIR BAG SUPPLEMENTAL RESTRAINT SYSTEM (SRS) COMPONENTS. TO DEPLETE THE BACKUP POWER SUPPLY ENERGY, DISCONNECT THE BATTERY GROUND CABLE AND WAIT ONE MINUTE. BE SURE TO DISCONNECT AUXILIARY BATTERIES AND POWER SUPPLIES (IF SO EQUIPPED).**

   NOTE: Make sure the front wheels (1007) are in the straight-ahead position.

   Disconnect the battery ground cable.

   1 Disconnect the battery ground cable (14301).

   2 Disconnect the battery to starter relay cable (14300) and wait one minute for the backup power supply to be depleted.

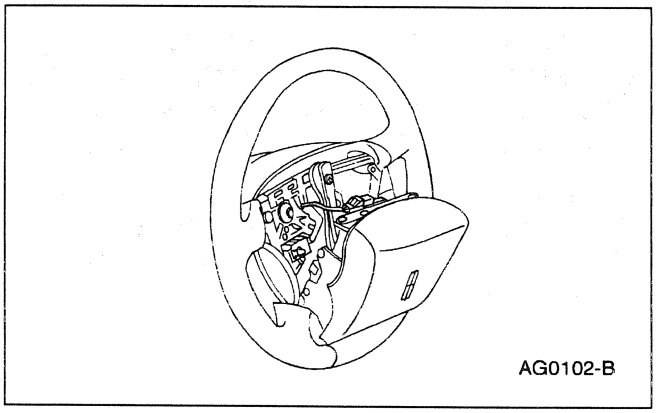

2. Remove the driver air bag module; refer to Section 501-20B.

Official Licensed Data
Ford Motor Company

REMOVAL AND INSTALLATION (Continued)

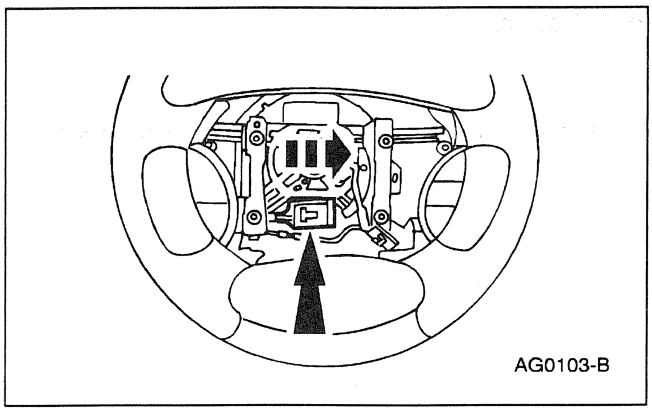

3. Disconnect the speed control electrical connector.

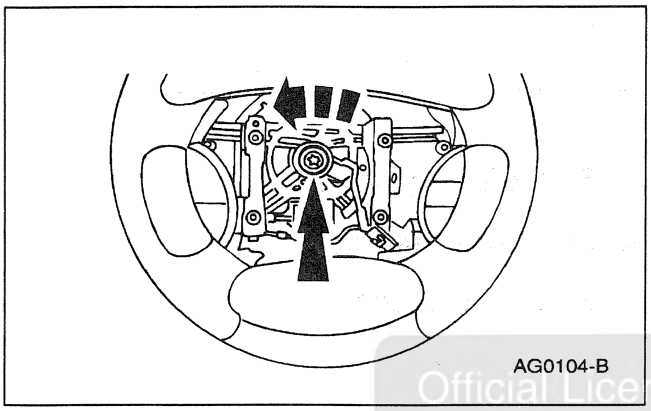

4. Remove the steering wheel retaining bolt.

Official Licensed Product
Ford Motor Company

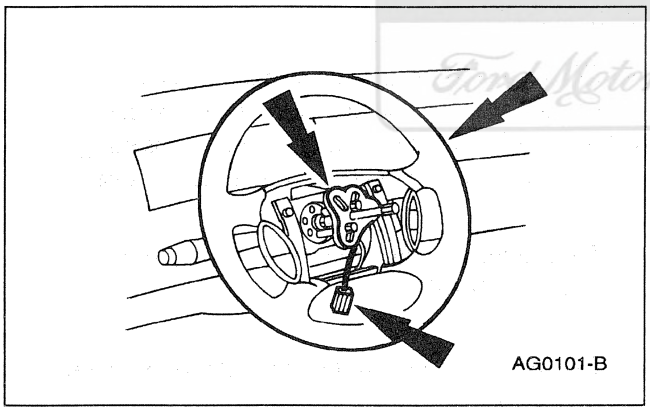

5. ⚠ **CAUTION: To prevent damage, make sure the air bag sliding contact wire harness does not get caught on the steering wheel (3600) when lifting off.**

   Install the Steering Wheel Puller and remove the steering wheel. Route the air bag sliding contact wire harness through the steering wheel.

REMOVAL AND INSTALLATION (Continued)

Installation

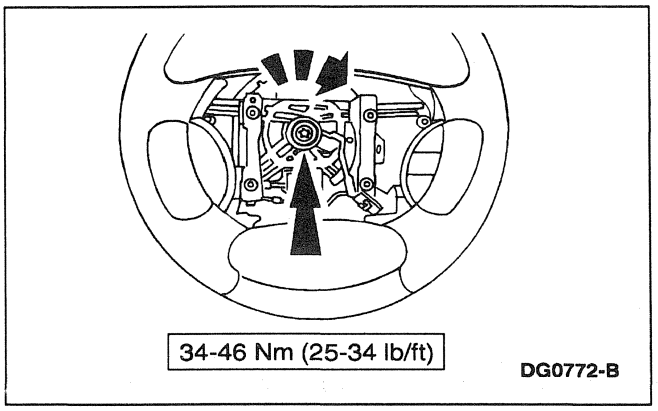

1. Follow the removal procedure in reverse order.

Air Bag Sliding Contact

Removal and Installation

Refer to Section 501-20B.

Official Licensed Product
Ford Motor Company

Column

Removal

NOTE: All steering column components are assembled with specific fasteners. They are designed with a thread locking system to prevent loosening due to vibrations associated with normal vehicle operation.

1. Disconnect the battery ground cable; refer to Section 414-01.

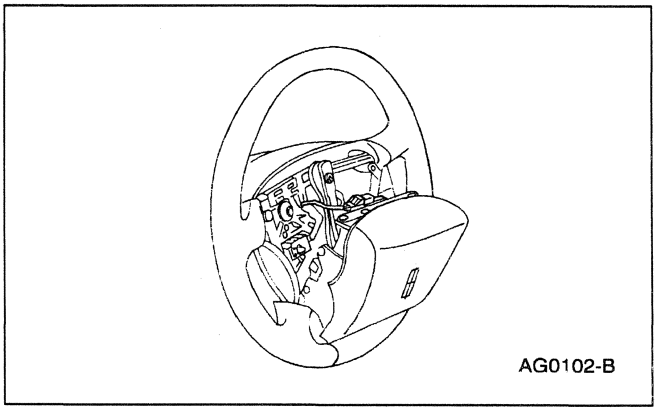

2. Remove the driver air bag module; refer to Section 501-20B.

3. Remove the air bag sliding contact (14A664); refer to Section 501-20B.

REMOVAL AND INSTALLATION (Continued)

4. Remove the steering wheel; refer to Wheel in this section.

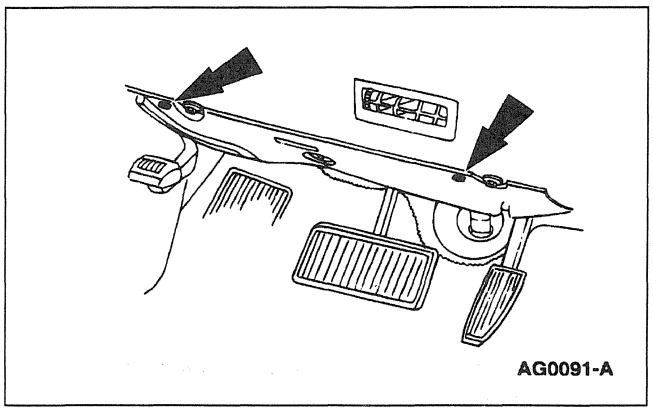

5. Remove the two lower instrument panel insulator retaining screws.

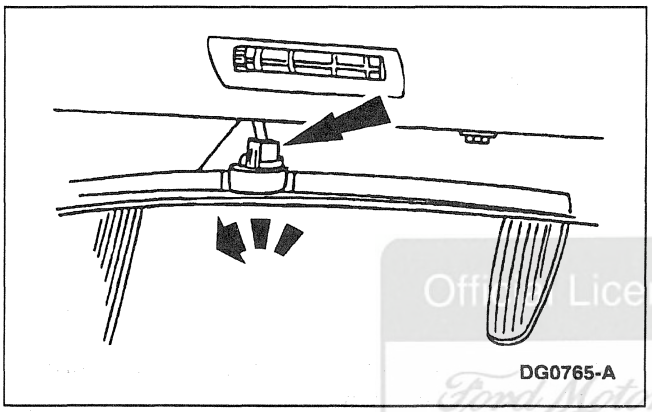

6. Remove the courtesy light and place the lower instrument panel insulator out of way.

Official Licensed Product
Ford Motor Company

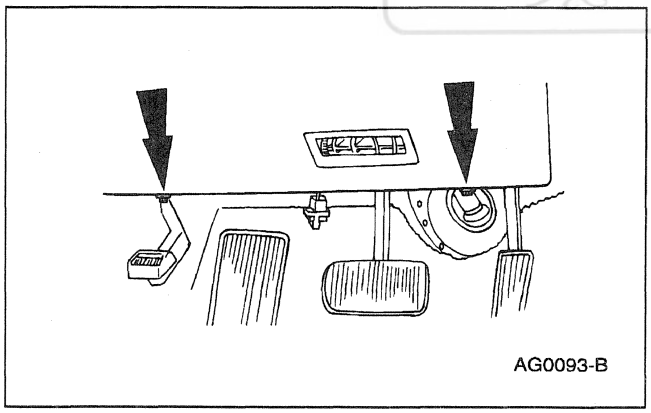

7. Remove the two instrument panel steering column cover retaining screws and place the instrument panel steering column cover (04459) panel out of way.

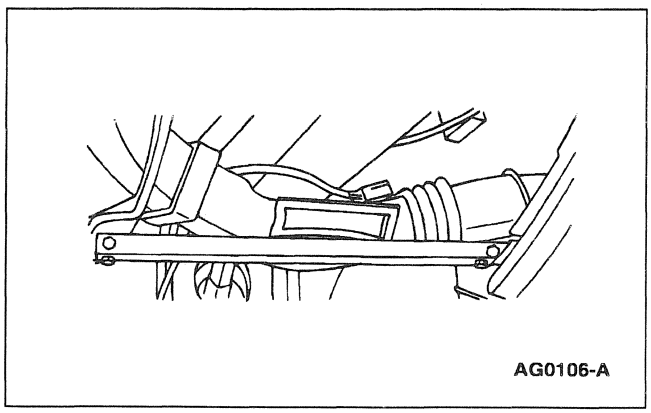

8. Remove the four instrument panel reinforcement to the instrument panel retaining bolts. Place the reinforcement out of way.

REMOVAL AND INSTALLATION (Continued)

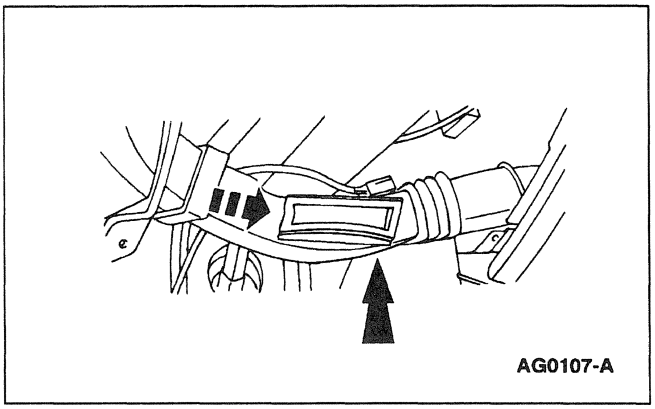

9. Remove the A/C duct.

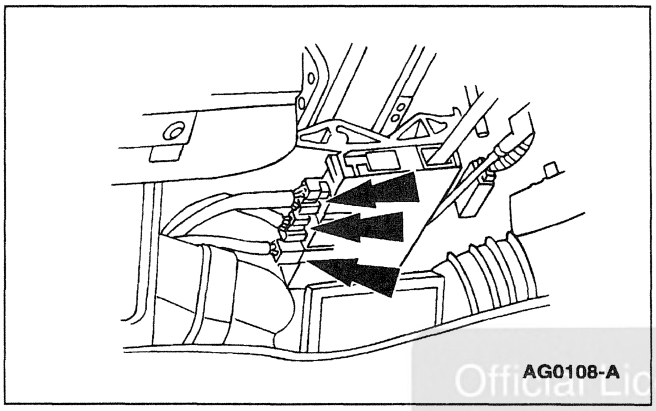

10. Disconnect the three electrical connectors at the junction box.

Official Licensed Product
Ford Motor Company

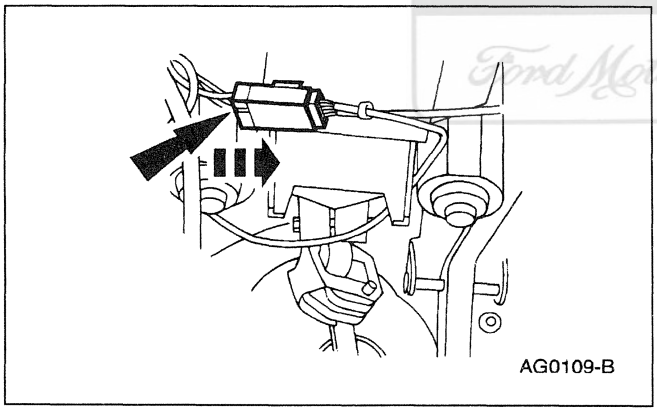

11. Disconnect the electrical connector at the bottom of the steering column.

REMOVAL AND INSTALLATION (Continued)

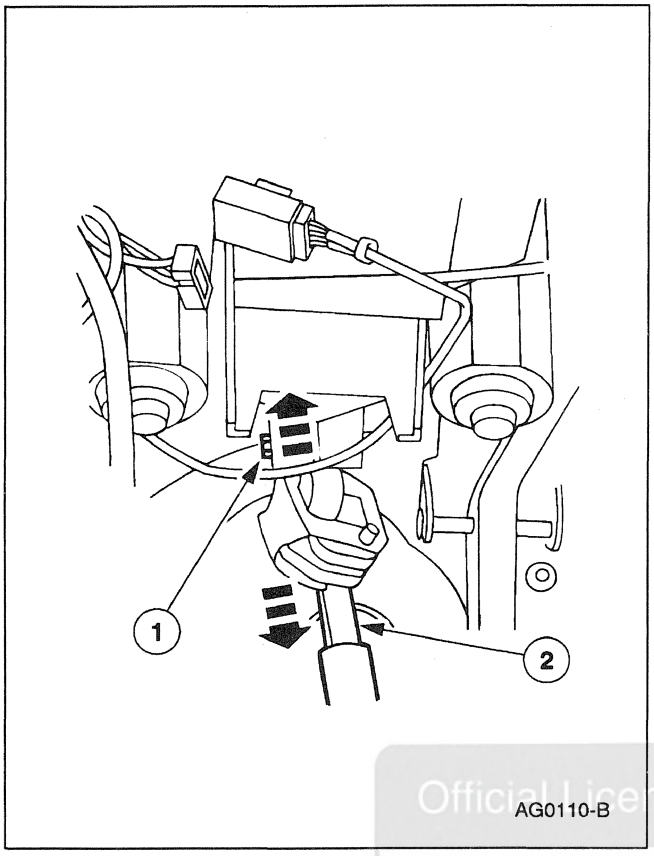

12. Disconnect the steering column lower yoke (3N725) .
    1 Remove the pinch bolt from the steering column lower yoke .
    2 Slide the intermediate shaft into the lower steering shaft.

Official Licensed Product
Ford Motor Company

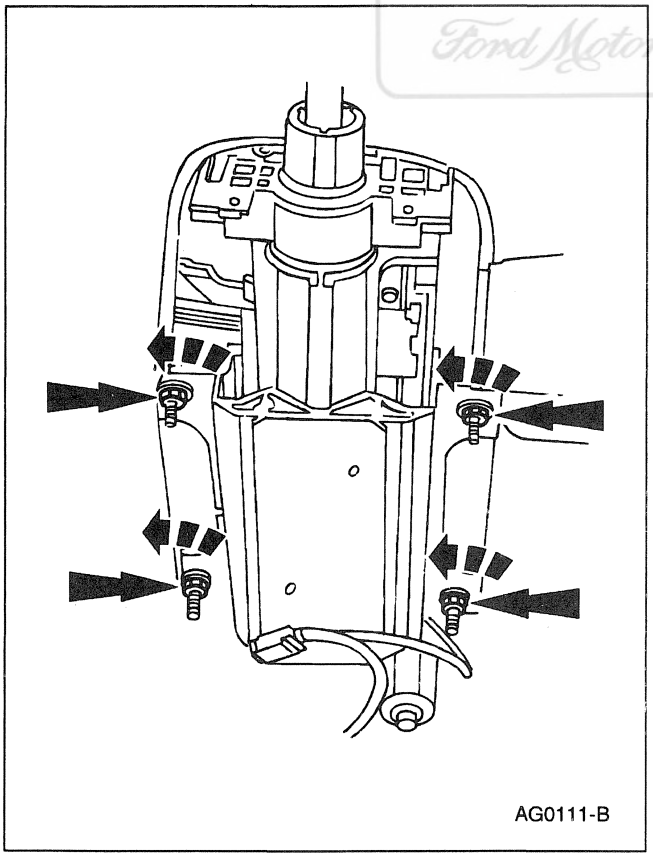

13. While supporting the steering column, remove the four steering column retaining nuts and remove the steering column from the vehicle.

REMOVAL AND INSTALLATION (Continued)

Installation

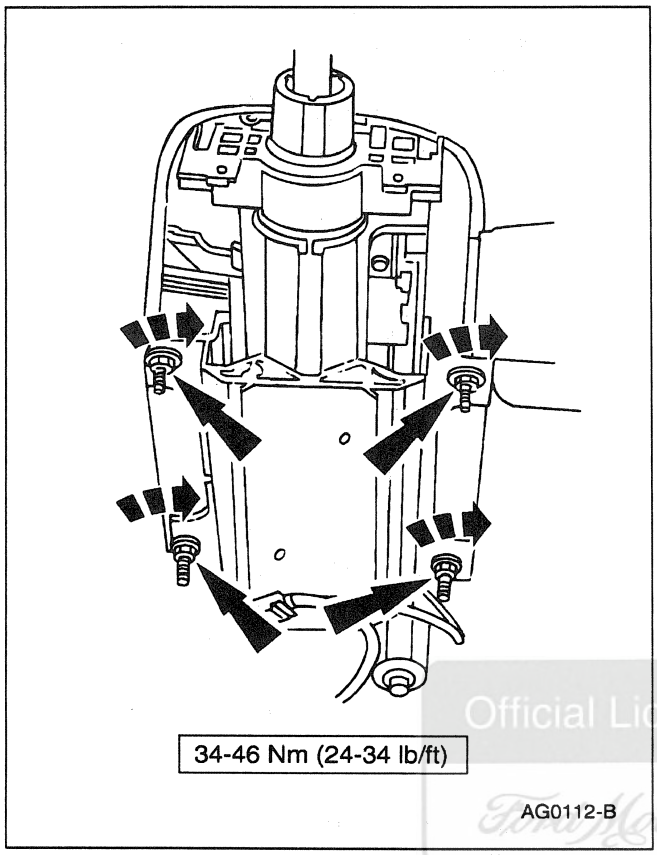

1. Follow the removal procedure in reverse order.

Official Licensed Product
Ford Motor Company

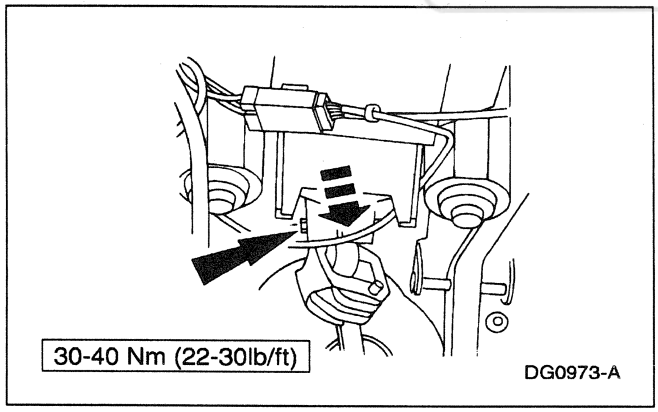

REMOVAL AND INSTALLATION (Continued)

Tilt/Telescope Motors

Removal

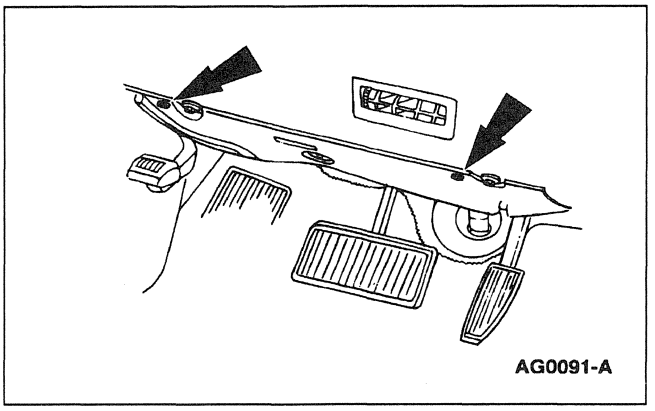
AG0091-A

1. Remove the lower instrument panel insulator retaining screws.

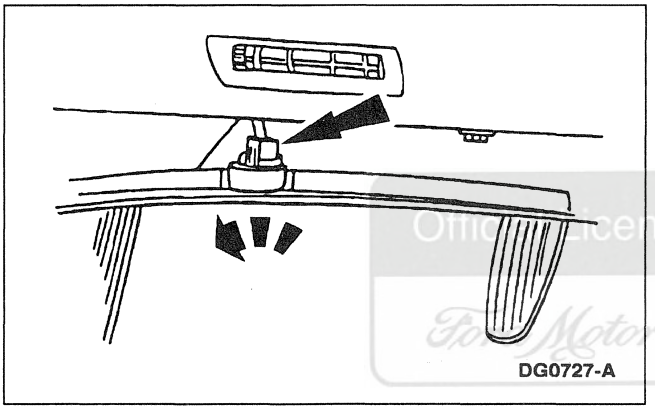
DG0727-A

2. Remove the courtesy light and place the lower instrument panel insulator out of the way.

Unlicensed Product
Ford Motor Company

REMOVAL AND INSTALLATION (Continued)

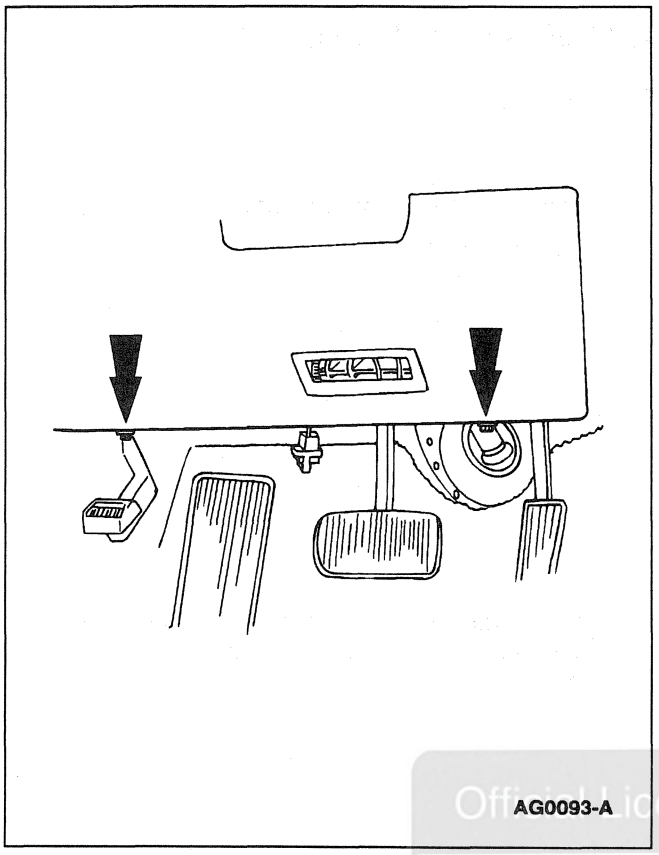

3. Remove the instrument panel steering column cover retaining screws and place the instrument panel steering column cover (04459) out of the way.

Official Licensed Product
Ford Motor Company

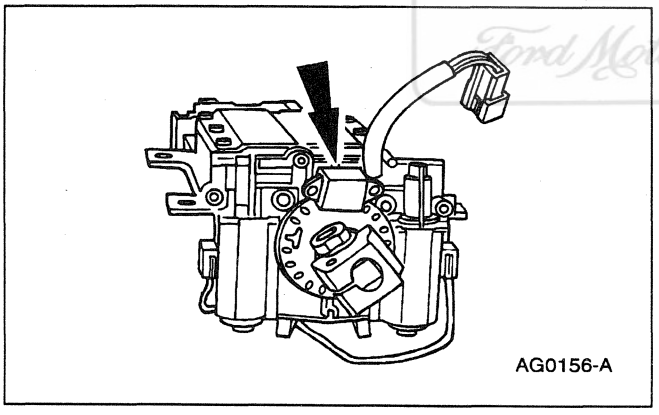

4. Remove the shock absorber electronic steering sensor (18B015).

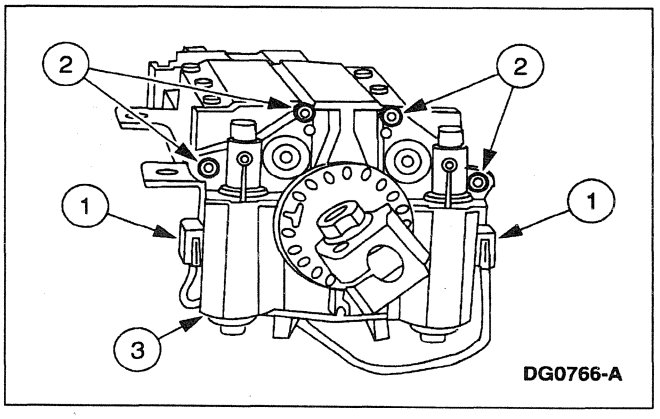

5. Remove the tilt/telescope motor.
   1 Disconnect the electrical connector.
   2 Remove the retaining screws.
   3 Remove the motor.

REMOVAL AND INSTALLATION (Continued)

Installation

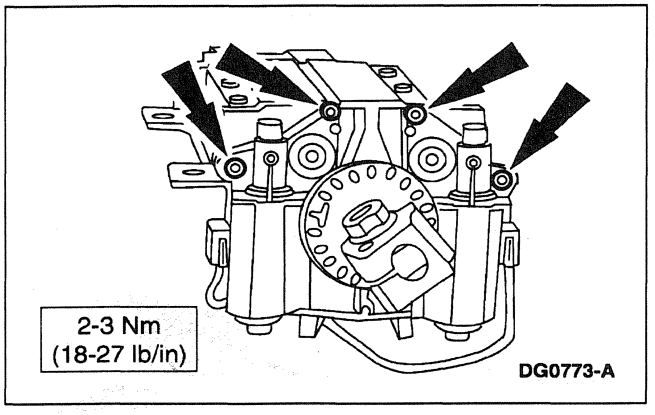

1. Follow the removal procedure in reverse order.

DISASSEMBLY AND ASSEMBLY

Steering Column

Special Tool(s)

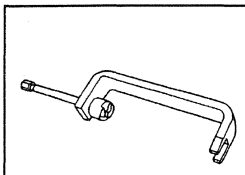 ST1692-A	Tilt Spring Compressor 211-201 (T97P-3D655-A)

Ford Licensed Product
Ford Motor Company

Disassembly

1. Remove the steering column assembly; refer to Column in this section.

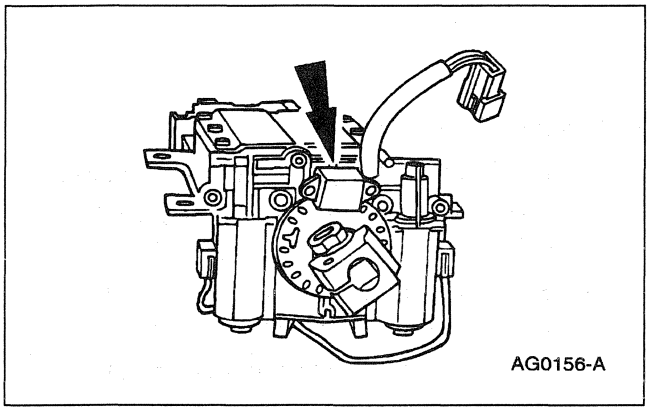

2. Remove the shock absorber electronic steering sensor (18B015).

DISASSEMBLY AND ASSEMBLY (Continued)

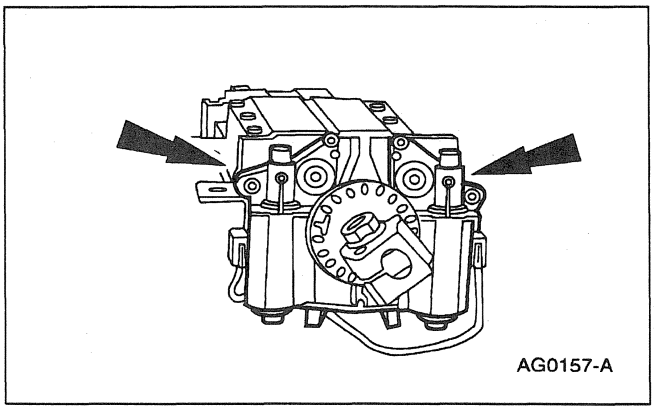

3. Remove the tilt and telescope motors.

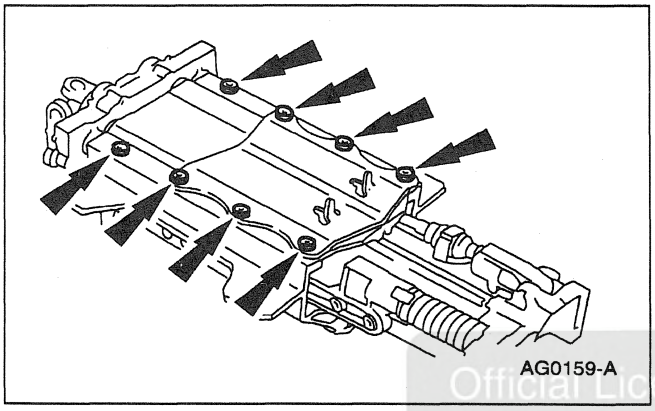

4. Remove the housing cover.

Official Licensed Product
Ford Motor Company

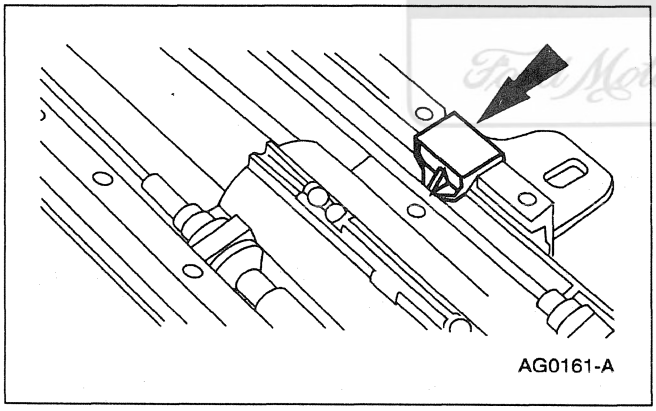

5. Remove the potentiometer link.

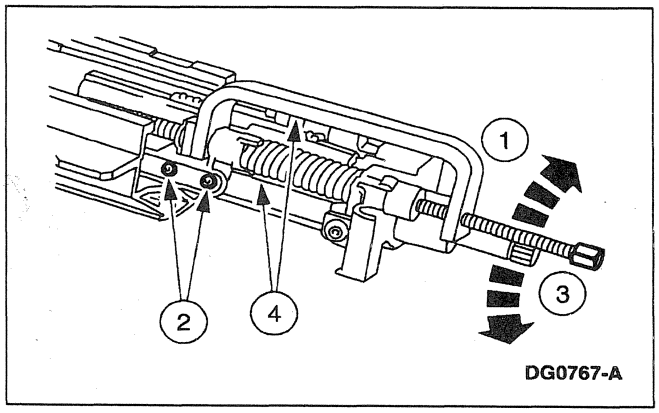

6. Remove the tilt spring.
   1 Install the Tilt Spring Compressor finger-tight.
   2 Remove the telescoping actuator retaining bolts.
   3 Slowly turn the tilt spring compressor bolt counterclockwise to release the spring tension.
   4 Remove the tilt spring compressor and the tilt spring.

DISASSEMBLY AND ASSEMBLY (Continued)

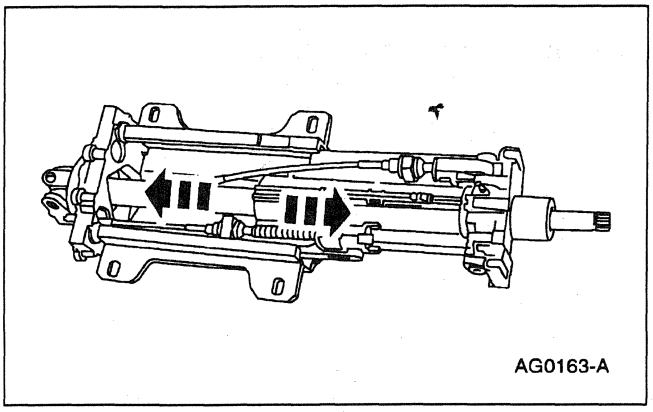
AG0163-A

7. **NOTE:** Index-mark the steering shaft tube to show the location of the steering shaft flat.

   Separate the front and rear halves of the steering column shaft.

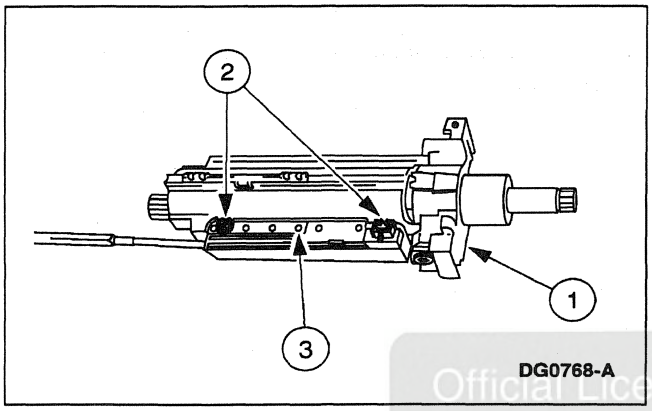

DG0768-A

8. Remove the potentiometer.
   1 Turn the housing upside down.
   2 Remove the retaining screws.
   3 Remove the potentiometer.

Official Licensed Product
Ford Motor Company

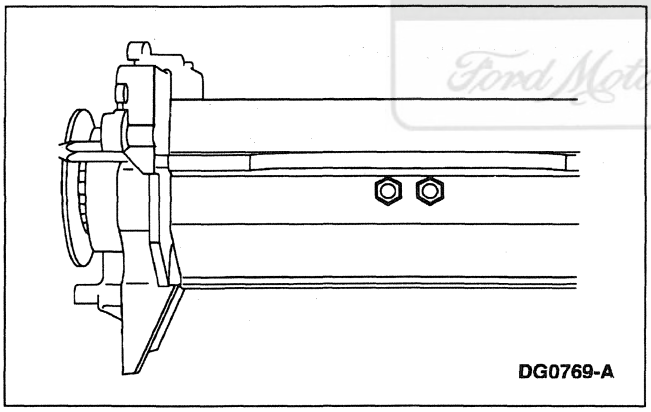
DG0769-A

9. Remove the retaining nuts, then the telescope actuator.

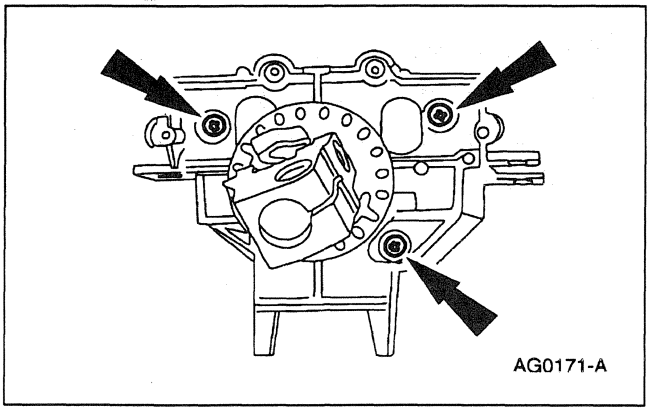
AG0171-A

10. Separate the front steering shaft assembly from the support housing.

DISASSEMBLY AND ASSEMBLY (Continued)

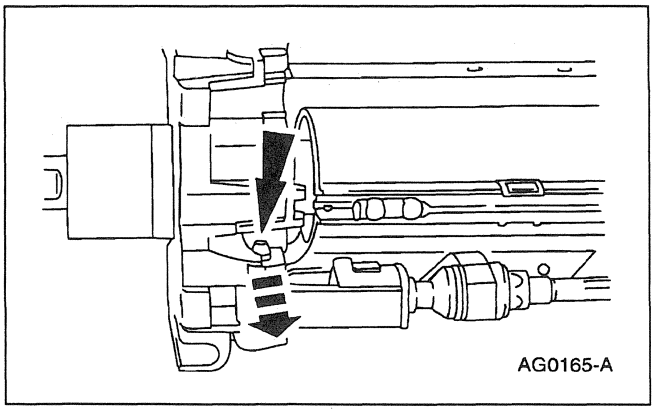

11. Remove the tilt actuator pivot pin.

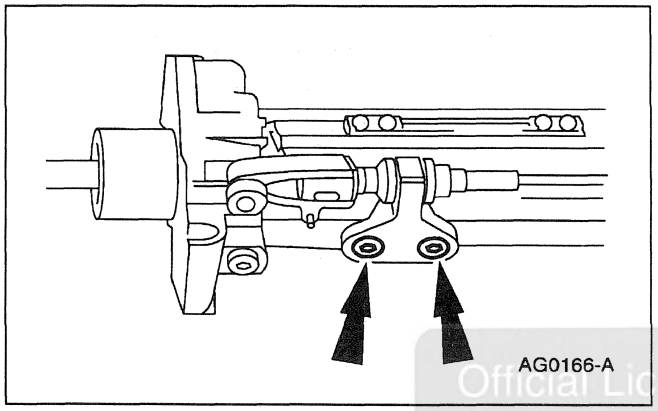

12. Remove retaining bolts, and remove the tilt actuator.

Official Licensed Product
Ford Motor Company

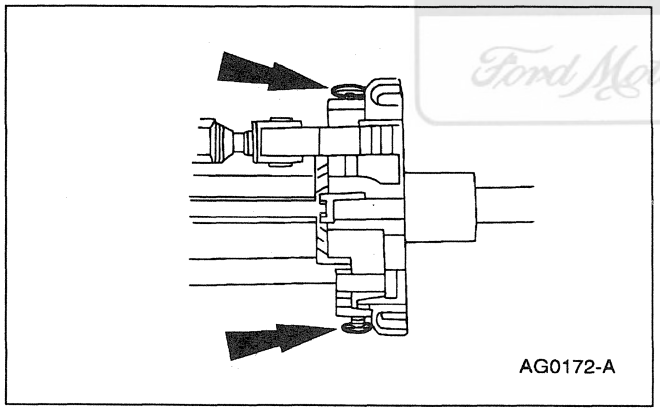

13. Remove the tilt pivot bolts.

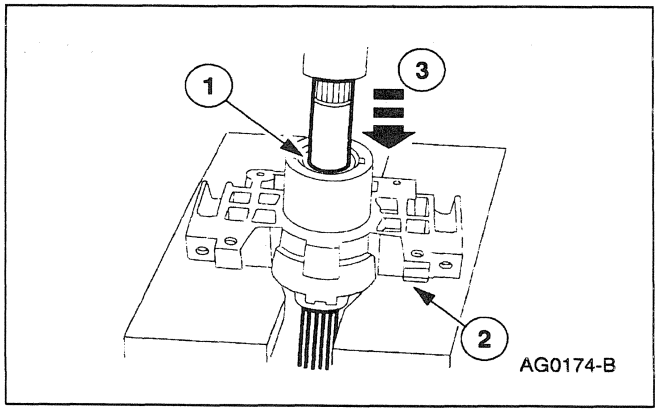

14. Press out the rear steering shaft.
    1 Remove the retaining ring.
    2 Position the bearing housing on the press bed.
    3 Press out the steering shaft.

DISASSEMBLY AND ASSEMBLY (Continued)

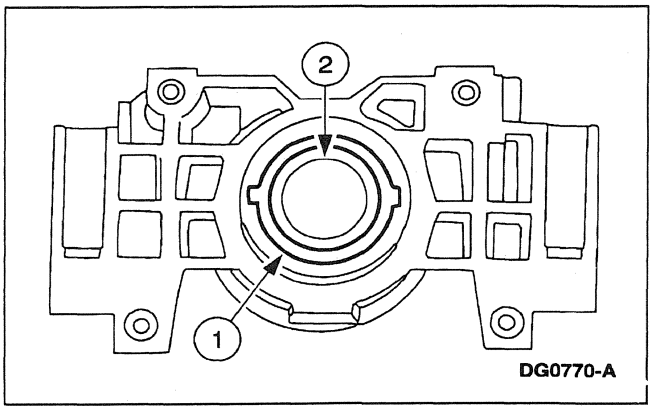

15. Remove the steering column rear small bearing.
    1 Remove the small bearing retaining ring.
    2 Using a suitable brass drift, drive out the small bearing.

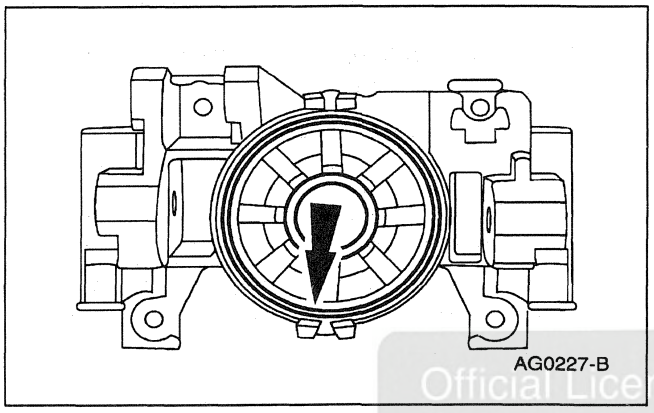

16. Remove the steering column rear large bearing.
    - Using a suitable brass drift, drive out the large bearing.

Official Licensed Product
Ford Motor Company

Assembly

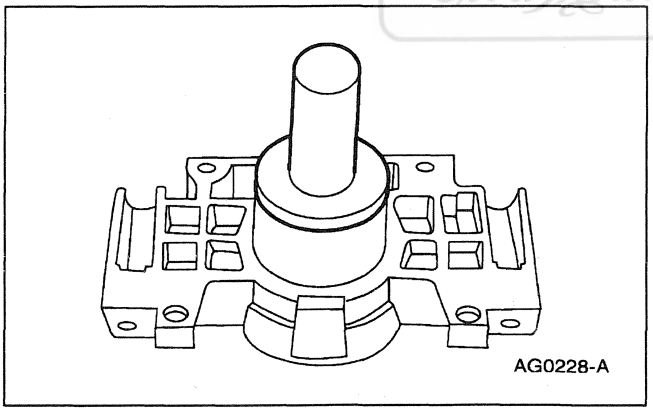

1. Install the steering column rear small bearing, pressing only on the outside race.

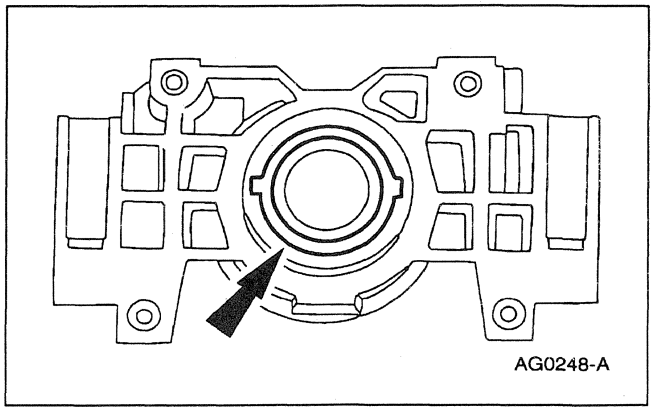

2. Install the steering column rear small bearing retaining ring.

DISASSEMBLY AND ASSEMBLY (Continued)

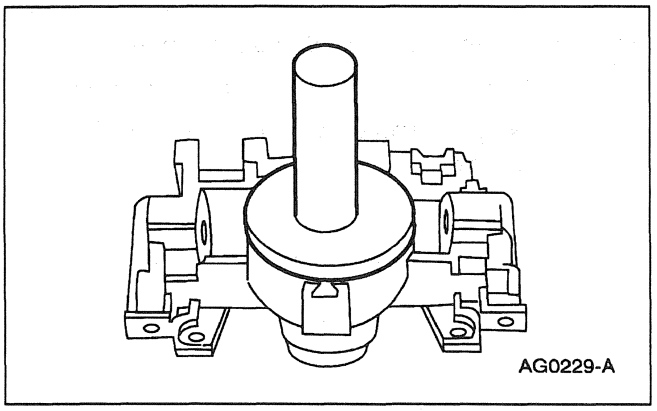

3. Install the steering column rear large bearing, pressing only on the outside race.

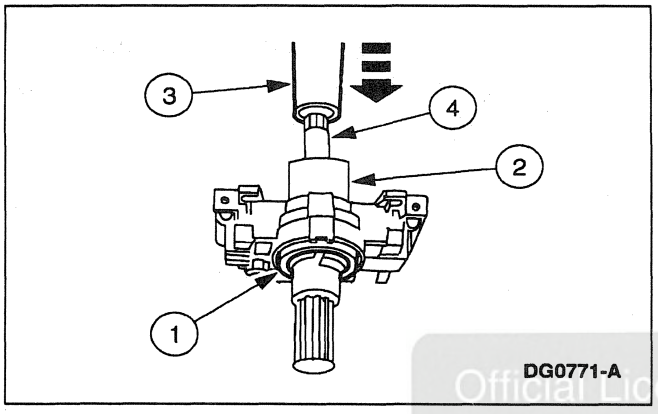

4. Press the rear bearings and housing onto the steering column shaft.
   1 Support the large bearing inner race on a press bed with a suitable sleeve.
   2 Place the bearing housing over the steering column shaft.
   3 Place a suitable sleeve over the short end of the steering column shaft that will seat on the small bearing inner race.
   4 Press the bearings and housing onto the shaft.

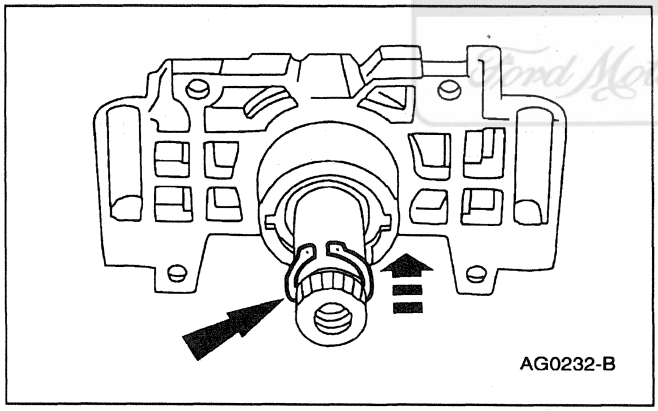

5. Install the steering column shaft retaining ring.

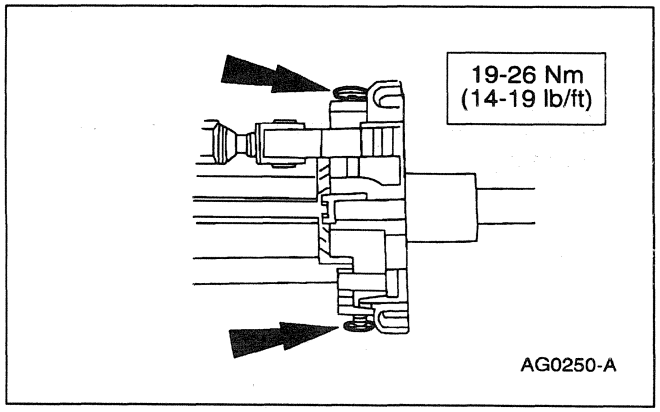

6. Attach the bearing housing to the center housing. Install the pivot bolts.

Official Licensed Product
Ford Motor Company

DISASSEMBLY AND ASSEMBLY (Continued)

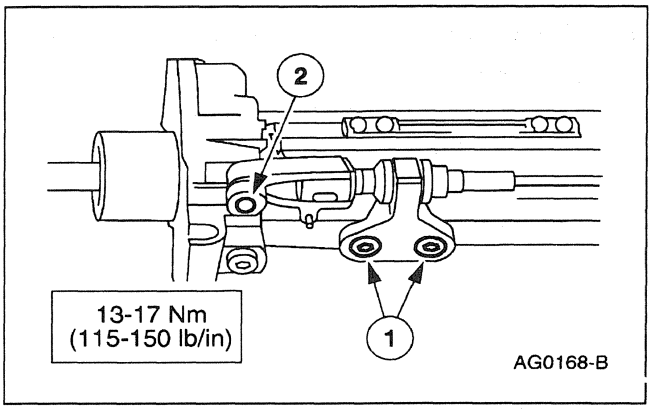

7. Install the tilt actuator.
   1 Install the retaining bolts.
   2 Drive the pivot pin into place.

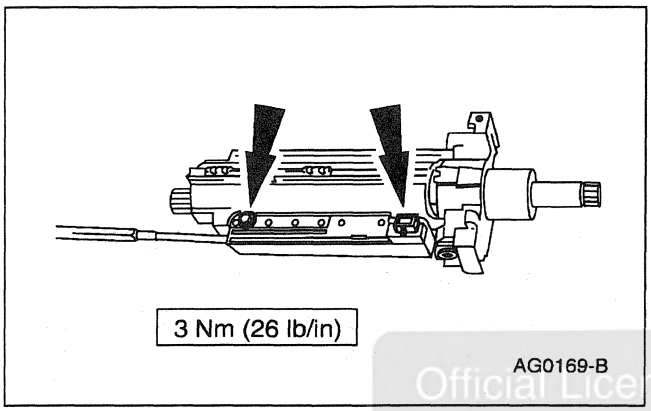

8. Install the potentiometer. Tighten retaining screws to specification.

Official Licensed Product
Ford Motor Company

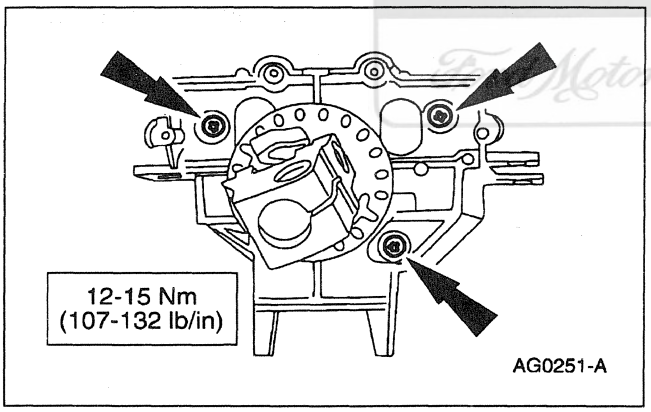

9. Attach the front steering shaft assembly to the support housing, install the retaining bolts.

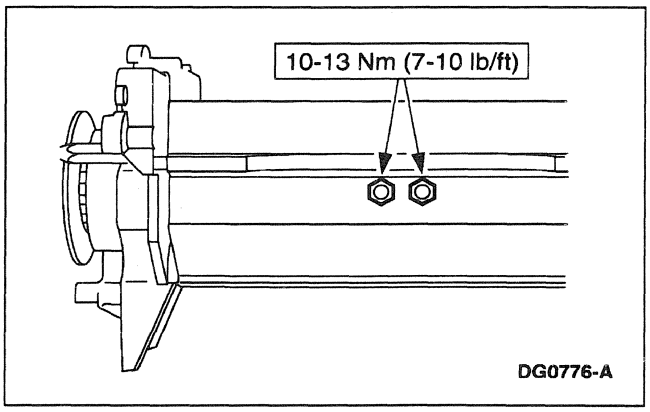

10. Install the telescope actuator.
    - Position the actuator inside the support housing.
    - Install the retaining nuts. Tighten nuts to specification.

DISASSEMBLY AND ASSEMBLY (Continued)

11. Connect the front and rear steering column shafts.
    1 Align the index mark on the front shaft with the flat on the spline of the rear shaft.
    2 Slide the rear shaft into the front shaft.

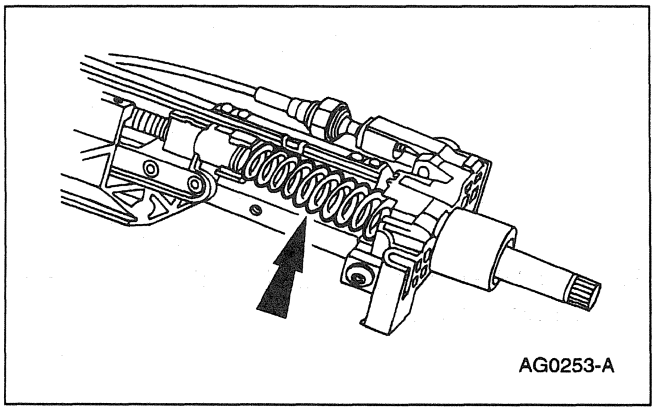

12. Install the tilt spring.

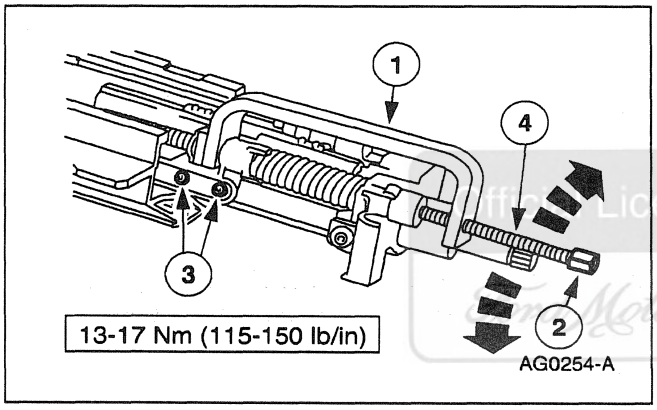

13. Install the telescope actuator retaining bolts.
    1 Install the tilt spring compressor.
    2 Turn the tilt spring compressor bolt clockwise until the bolt holes for the telescope actuator align.
    3 Install the telescope actuator retaining bolts.
    4 Remove the tilt spring compressor.

Ford Motor Company

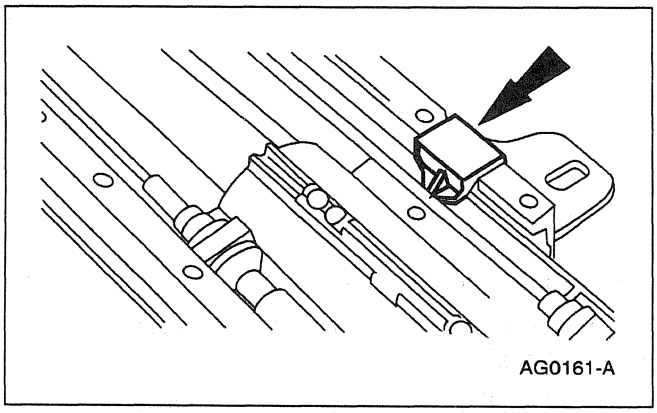

14. Install the telescope potentiometer link.

DISASSEMBLY AND ASSEMBLY (Continued)

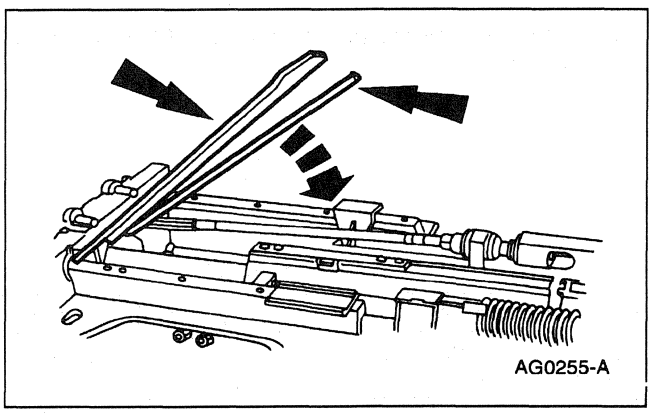

15. Position the ball bearing track and housing cover into place.

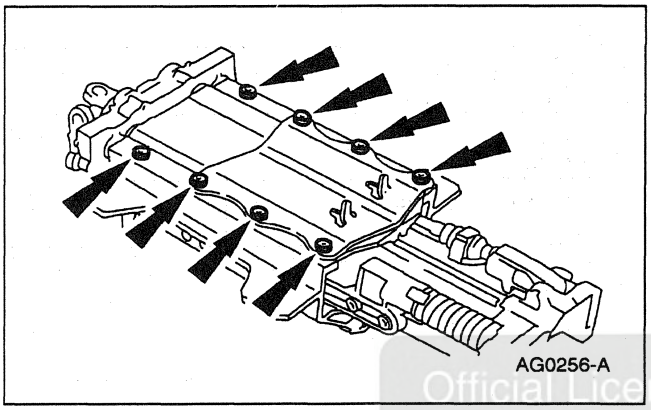

16. Install the housing cover retaining bolts.

Official Licensed Product
Ford Motor Company

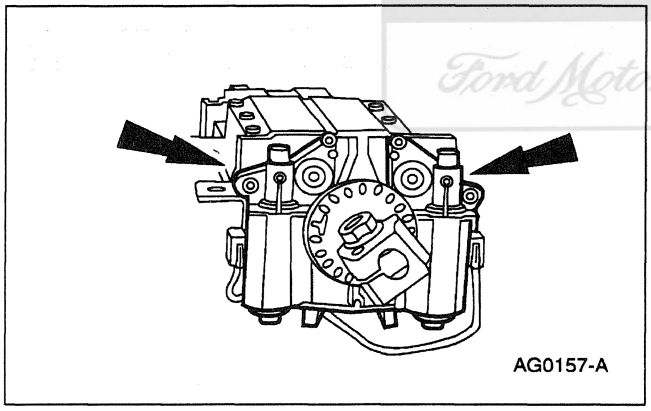

17. Install the tilt and telescope motors.

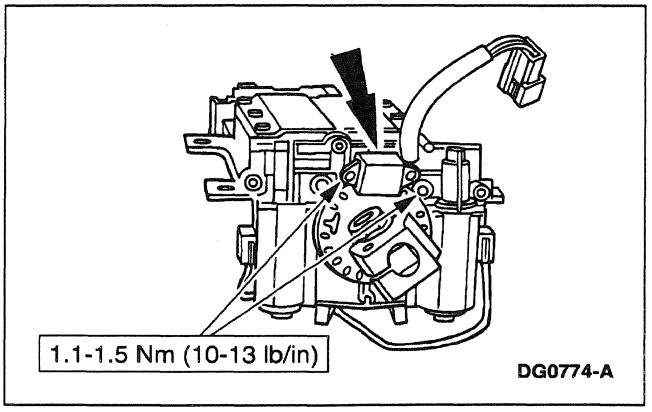

18. Install the shock absorber electronic steering sensor. Tighten to specifications.

DISASSEMBLY AND ASSEMBLY (Continued)

19. Install the steering column; refer to Column in this section.

SPECIFICATIONS

Torque Specifications

Description	Nm	Lb/Ft	Lb/In
Steering Wheel Retaining Bolt	34-46	25-34	—
Steering Column Mounting Nut	34-46	24-34	—
Steering Shaft Yoke Coupling Bolt	30-40	22-30	—
Air Bag Module Screws	10-14	—	89-123
Lower Steering Column Shaft-to-Steering Gear	40-55	30-41	—
Lower Steering Column Shaft-to-Steering Column Lower Yoke	41-56	31-41	—
Instrument Panel Reinforcement Brace	34-52	25-38	—
Tilt/Telescope Motors Retaining Screws	2-3	—	18-27
Bearing Housing Pivot Bolts	19-26	14-19	—

(Continued)

Torque Specifications

Description	Nm	Lb/Ft	Lb/In
Tilt Actuator Retaining Bolts	13-17	—	115-150
Potentiometer Retaining Screws	3	—	26
Front Steering Shaft End Plate Retaining Bolts	12-15	—	107-132
Telescope Actuator Retaining Bolts	13-17	—	115-150
Housing Cover Retaining Bolts	12-15	—	107-132
Telescope Actuator Retaining Nuts	10-13	7-10	—
Ignition Switch Retaining Screw	1	—	14-16
Shift Interlock Solenoid Retaining Screws	1	—	14-16
Antenna Retaining Screw	1	—	11-13

Official Licensed Product Ford Motor Company

SECTION 211-05 Steering Column Switches

VEHICLE APPLICATION: Mark VIII

SUBJECT **PAGE**

DESCRIPTION AND OPERATION
Steering Column Switches 211-05-2
DIAGNOSIS AND TESTING
Steering Column Switches 211-05-3
Component Test 211-05-24
Inspection and Verification 211-05-3
Pinpoint Tests 211-05-7
Symptom Chart 211-05-7
REMOVAL AND INSTALLATION
Ignition Switch 211-05-25
Multi-Function Switch 211-05-25

Official Licensed Product
Ford Motor Company

DESCRIPTION AND OPERATION

Steering Column Switches

Component Location

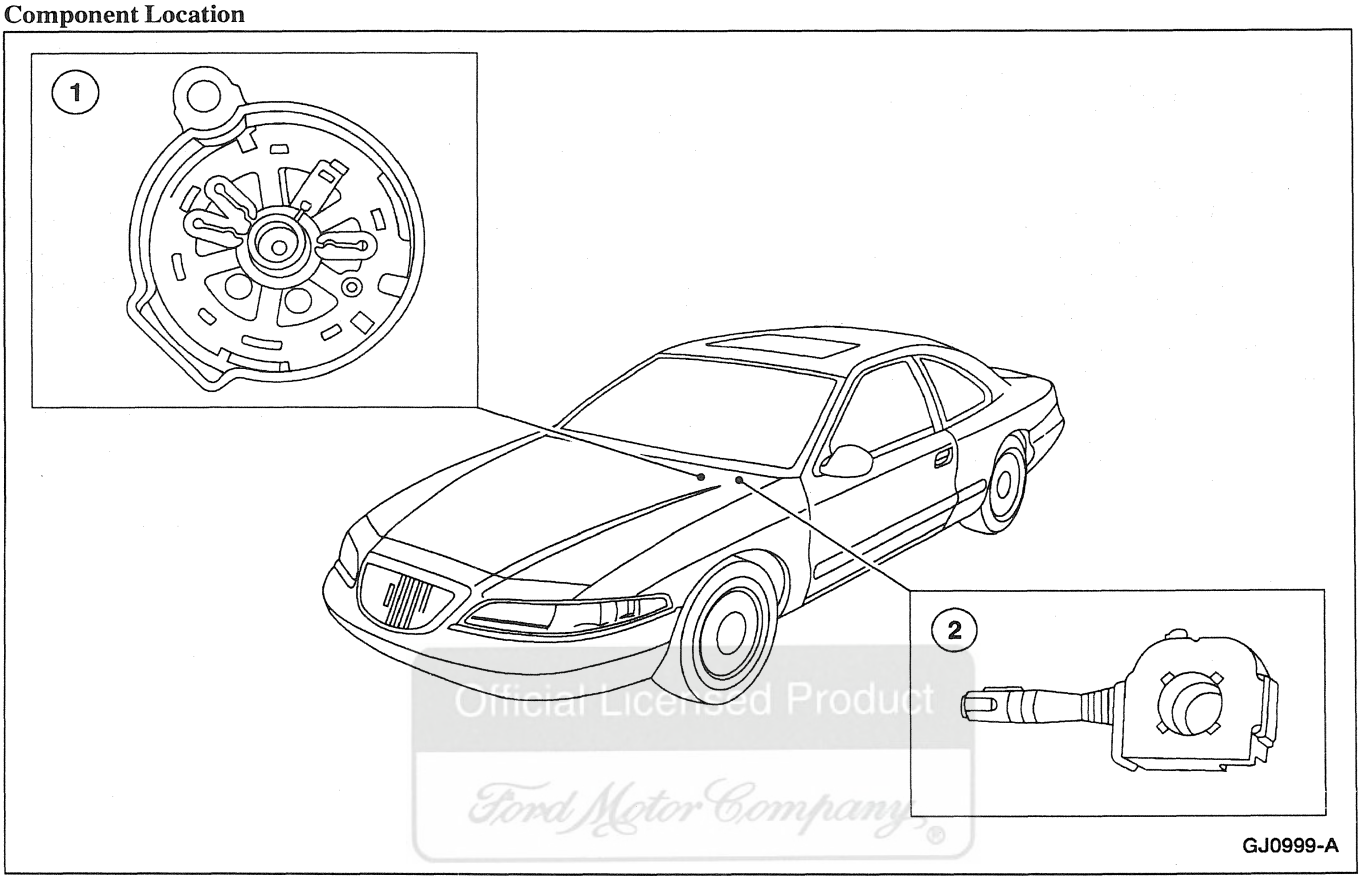

Official Licensed Product
Ford Motor Company

Item	Part Number	Description
1	—	Ignition Switch
2	13K359	Multi-Function Switch

The multi-function switch (13K359) is mounted to the steering column and controls the following functions:

- Turn signal.
- Headlamp dimmer.
- Headlamp flash-to-pass.
- Hazard warning.
- Cornering lamps.
- Windshield washer/wiper.
- Steering column tilt.
- Steering column telescope.

For information on the removal and installation of the multi-function switch, refer to Section 501-20B.

The ignition switch is mounted inside the instrument panel. It is controlled by the position of the ignition switch lock cylinder.

DIAGNOSIS AND TESTING

Steering Column Switches

Refer to Electrical and Vacuum Troubleshooting Manual, Cell 13, Power Distribution for schematic and connector information.

Refer to Electrical and Vacuum Troubleshooting Manual, Cell 58, Lighting Control Module for schematic and connector information.

Special Tool(s)

ST1137-A	73 Digital Multimeter or equivalent 105-R0051
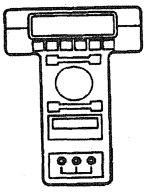 ST1217-A	New Generation Star (NGS) Tester or equivalent 418-F048 (007-00500)

Inspection and Verification

1. Verify the customer's concern by operating the steering column switch to duplicate the condition.
2. Inspect to determine if one of the following mechanical or electrical concerns apply:

Visual Inspection Chart

Mechanical	Electrical
• Damaged steering switch	• Blown fuse in power distribution box — Fuse 26 (20A) — Fuse 27 (30A) • Circuitry open/shorted

3. If the inspection reveals obvious concerns that can be readily identified, repair as required.
4. If ignition switch concerns remain after the inspection, connect New Generation STAR (NGS) Tester to the data link connector (DLC) located beneath the instrument panel to perform DATA LINK DIAGNOSTIC TEST; refer to Section 418-00. If the New Generation STAR (NGS) Tester responds with NO RESPONSE/NOT EQUIPPED for steering column/ignition/lighting (SCIL) module, go to Pinpoint Test B. If the DATA LINK DIAGNOSTIC TEST is passed for the SCIL module, retrieve continuous diagnostic trouble codes (DTCs) and execute Self Test Diagnostics for the SCIL module; refer to Section 418-00.
5. If self test is passed and no diagnostic trouble codes (DTCs) are retrieved, go to Symptom Chart to continue diagnostics.
6. If diagnostic trouble codes (DTCs) are retrieved, go to the Steering Column/Ignition/Lighting (SCIL) Module Diagnostic Trouble Code (DTC) Index to continue diagnostics.
7. If the SCIL module cannot be accessed by the New Generation Star (NGS) Tester, go to Pinpoint Test B.

Official Licensed Product
Ford Motor Company

Steering Column/Ignition/Lighting (SCIL) Module Diagnostic Trouble Code (DTC) Index

DTC	Description	DTC Caused By	Action
C1446	Brake Switch Circuit Failure	SCIL Module	REFER to Section 206-05.
B1246	Panel Dim Potentiometer Switch Circuit Failure	SCIL Module	REFER to Section 417-02.
B1312	Lamp Headlamp Input Circuit Short to Battery	SCIL Module	REFER to Section 417-01.
B1334	Luggage Compartment Door Ajar Circuit Short to Ground	SCIL Module	REFER to Section 417-02.
B1342	ECU Is Defective	SCIL Module	REPLACE the SCIL module. REFER to Section 417-01.

(Continued)

DIAGNOSIS AND TESTING (Continued)

Steering Column/Ignition/Lighting (SCIL) Module Diagnostic Trouble Code (DTC) Index

DTC	Description	DTC Caused By	Action
B1353	Ignition Key-In Circuit Open	SCIL Module	If DTC B1353 is retrieved, GO to Pinpoint Test C. If DTC B1353 and B1364 are retrieved, GO to Pinpoint Test A.
B1360	Ignition RUN/ACC Circuit Open	SCIL Module	If DTC B1360 is retrieved, GO to Pinpoint Test D.
B1364	Ignition START Circuit Open	SCIL Module	If DTC B1364 is retrieved, GO to Pinpoint Test E. If DTC B1353 and B1364 are retrieved, GO to Pinpoint Test A.
B1446	Wiper Park Sense Circuit Failure	SCIL Module	GO to Section 501-16.
B1490	Door Handle Right Front Short to Ground	SCIL Module	This is an invalid DTC. Do not attempt to repair.
B1498	Deck Lid Punchout Switch Short to Ground	SCIL Module	This is an invalid DTC. DO NOT attempt to repair.
B1509	Flash-to-Pass Switch Circuit Short to Battery	SCIL Module	REFER to Section 417-01.
B1514	Door Handle LF Circuit Short to Ground	DDM	This is an invalid DTC. DO NOT attempt to repair.
B1522	Hood Switch Circuit Short to Ground	SCIL Module	REFER to Section 419-01A.
B1562	Door Lock Cylinder Circuit Short to Ground	SCIL Module	REFER to Section 419-01A.
B1566	Door Ajar Circuit Short to Ground	SCIL Module	REFER to Section 417-02.
B1600	PATS Ignition Key Transponder Signal Is Not Received	SCIL Module	REFER to Section 419-01B.
B1601	PATS Received Incorrect Key Code from Ignition Key Transponder	SCIL Module	REFER to Section 419-01B.
B1676	Battery Voltage Out of Range	SCIL Module	REFER to Section 417-01.
B1682	PATS is Disabled (Check Link Between PATS and Transponder)	SCIL Module	REFER to Section 419-01B.
B1687	Lamp Dome Input Circuit Short to Battery	SCIL Module	REFER to Section 417-02.
B1689	Autolamp Delay Circuit Failure	SCIL Module	REFER to Section 417-01.
B1796	Lamp Headlamp Low Beam Circuit Short to Battery	SCIL Module	REFER to Section 417-01.
B1875	Turn Signal/Hazard Switch Signal Circuit Failure	SCIL Module	REFER to Section 417-01.
B1980	Bulb Outage Condition Detected	SCIL Module	REFER to Section 417-01.
B2328	Steering Column Reach Feedback Potentiometer Circuit Failure	SCIL Module	REFER to Section 211-04.
B2332	Steering Column Tilt Feedback Potentiometer Circuit Failure	SCIL Module	REFER to Section 211-04.
B2351	Steering Column Switch Signal Circuit Failure	SCIL Module	REFER to Section 211-04.
U1027	SCP Invalid or Missing Data for Engine RPM	PCM	PERFORM the PCM Self-Test.
U1041	SCP Invalid or Missing Data for Vehicle Speed	Anti-Lock Brake Control Module	PERFORM the Anti-Lock Brake Control Module Self-Test.

(Continued)

DIAGNOSIS AND TESTING (Continued)

Steering Column/Ignition/Lighting (SCIL) Module Diagnostic Trouble Code (DTC) Index

DTC	Description	DTC Caused By	Action
U1057	SCP Invalid or Missing Data for Vehicle Configuration	SCIL Module	PERFORM the SCIL Module Self-Test.
U1059	SCP Invalid or Missing Data for Transmission/Transaxle/PRNDL	PCM	PERFORM the PCM Self-Test.
U1123	SCP Invalid or Missing Data for Odometer	Anti-Lock Brake Control Module	PERFORM the Anti-Lock Brake Control Module Self-Test.
U1147	SCP Invalid or Missing Data for Vehicle Security	PCM	PERFORM the PCM Self-Test.
U1180	SCP Invalid or Missing Data for Personalization (Memory) Features	DDM	PERFORM the DDM Self-Test.
U1181	SCP Invalid or Missing Data for Personalization (Memory) Features	DDM	PERFORM the DDM Self-Test.
U1197	SCP Invalid or Missing Data for Door Locks	DDM	PERFORM the DDM Self-Test.
U1198	SCP Invalid or Missing Data for External Access (Doors)	DDM	PERFORM the DDM Self-Test.
U1199	SCP Invalid or Missing Data for External Access (Doors)	DDM	PERFORM the DDM Self-Test.
U1211	SCP Invalid or Missing Data for Restraints	DSM	PERFORM the DSM Self-Test.
U1222	SCP Invalid or Missing Data for Interior Lamps	SCIL Module	PERFORM the SCIL Module Self-Test.

Official Licensed Product Motor Company

Steering Column/Ignition/Lighting (SCIL) Module Parameter Identification (PID) Index

PID	Description	Expected Values
CCNTSCI	Number of Continuous DTCs on SCIL	One Count Per Bit
BOO__SCI	Brake Switch Input	ON, OFF
PRK__BRK	Parking Brake Switch Input	ON, OFF
TILT	Steering Column Tilt Switch	SHORT, UP, DOWN, OFF
TELESCP	Steering Column Telescope Switch	SHORT, IN, OUT, OFF
TILTPOS	Tilt Position Sensor	SENSED, notSEN
TELEPOS	Telescope Position Sensor	SENSED, notSEN
TURN__SW	Left and Right Turn Signal Switch	OFF, LEFT, RIGHT, SHORT
LBEAMSW	Low Beam Switch	ON, OFF
HBEAMSW	High Beam Switch	ON, OFF
PARK__SW	Parking Switch	ON, OFF
LIGHTSN	Ambient Light	DAY, NIGHT
FLASH	Flash to Pass Switch	ON, OFF
FTURN__L	Left and Right Front Turn Lamp	R__OPEN, L__OPEN, L/R__OPEN, OK
RTURN__L	Left and Right Rear Turn Lamp	R__OPEN, L__OPEN, L/R__OPEN, OK
TAILLMP	Left and Right Tail Lamp	OPEN, OK
LOWBEAM	Low Beam Lamp	R__OPEN, L__OPEN, L/R__OPEN, OK
AUTOLMP	Autolamp Switch	ON, OFF
ALP__IMP	Autolamp Analog Input	0-100%
DOMESW	Dome Lamp Switch	ACTIVE, notACT

(Continued)

DIAGNOSIS AND TESTING (Continued)

Steering Column/Ignition/Lighting (SCIL) Module Parameter Identification (PID) Index

PID	Description	Expected Values
PANLDIM	Panel Dim Intensity Switch	0-100%
HOOD__SW	Hood Ajar Switch	AJAR, CLOSED
DECKLID	Deck Lid Ajar Switch	AJAR, CLOSED
P__DR__SW	Passenger Door Ajar Switch	AJAR, CLOSED
IGN__KEY	Ignition Key In/Out	IN, OUT
IGN__SCI	Ignition Switch	START, RUN, OFF, ACCSSY
WPPRKSW	Windshield Wiper Park Sense	notPRK, PARKED
NUMKEYS	Number of Ignition Key Codes Supported	BCD (Valid Range 0-16)
DRLKCYL	Door Lock Cylinder	ON, OFF
ENABLE	PATS System Status	ON, OFF
FAILSAF	PATS System Status	ON, OFF

Steering Column/Ignition/Lighting (SCIL) Module Active Command Index

Active Command	Display	Action
PID LATCH	PID LATCH	ON, OFF
ONE TOUCH WINDOW DWN AND ACCY DELAY	ACCY RLY	ON, OFF
WARNING LAMPS AND CHIME	CHIME	ON, OFF
	ANTI-THEFT	ON, OFF
	AUTOLMP	ON, OFF
	HIGH BEAM	ON, OFF
INTERIOR COURTESY LAMPS	INT LAMPS	ON, OFF
	MIRRORLAMP	ON, OFF
DECKLID RELEASE	RELEASE	ON, OFF
TURN SIGNAL AND MARKER LAMPS	LF TURN	ON, OFF
	RF TURN	ON, OFF
	LR TURN	ON, OFF
	RR TURN	ON, OFF
	PARKLAMPS	ON, OFF
HEADLAMP CONTROL	LEFT LOW	ON, OFF
	RIGHT LOW	ON, OFF
	HIGH BEAM	ON, OFF
	DRUN LAMP	ON, OFF

(Continued)

Steering Column/Ignition/Lighting (SCIL) Module Active Command Index

Active Command	Display	Action
	LF CORNER	ON, OFF
	RF CORNER	ON, OFF
HORN CONTROL	HORN	ON, OFF
BACKLIGHTING INTENSITY	INTENSITY	0%-100%
COURTESY LAMP INTENSITY	INTENSITY	0%-100%
DOOR AJAR SIGNAL	DOOR AJAR	ON, OFF
TRANSMIT SIGNAL COMMAND	TRANSMIT	ON, OFF
BRAKE SYSTEM	BRK/SHIFT	ON, OFF
	PARK BRK	ON, OFF
STEERING COLUMN CONTROL	TILT UP	ONE SECOND TIME OUT
	TILT DOWN	ONE SECOND TIME OUT
	TELSCP IN	ONE SECOND TIME OUT
	TELSCPOUT	ONE SECOND TIME OUT
KEYCODE ERASE TIME SET	MINUTES	8-63 MINUTES

Official Licensed Product
Ford Motor Company

DIAGNOSIS AND TESTING (Continued)

Symptom Chart

Symptom Chart

Condition	Possible Source	Action
• No Communication With the Module — Steering Column/Ignition/Lighting (SCIL)	• Circuitry. • SCIL module.	• GO to Pinpoint Test B.
• The Ignition Switch Is Inoperative	• Fuse. • Ignition switch. • Circuit.	• GO to Pinpoint Test C.
• No Power in ACC	• Ignition switch. • Circuit.	• GO to Pinpoint Test D.
• No Power in RUN	• Ignition switch. • Circuit.	• GO to Pinpoint Test D.
• No Power in START	• Ignition switch. • Circuit.	• GO to Pinpoint Test E.
• The Multi-Function Switch/Hazard Switch Does Not Operate Properly	• Multi-function switch.	• PERFORM the Multi-Function Switch Component Test. REFER to Component Test.

Pinpoint Tests

Official Licensed Product

PINPOINT TEST A: DTC B1353, DTC B1364 IGNITION SWITCH POWER SUPPLY FAILURE

TEST CONDITIONS	TEST DETAILS/RESULTS/ACTIONS
A1 CHECK CIRCUIT 1050 (LG/P) FOR VOLTAGE	
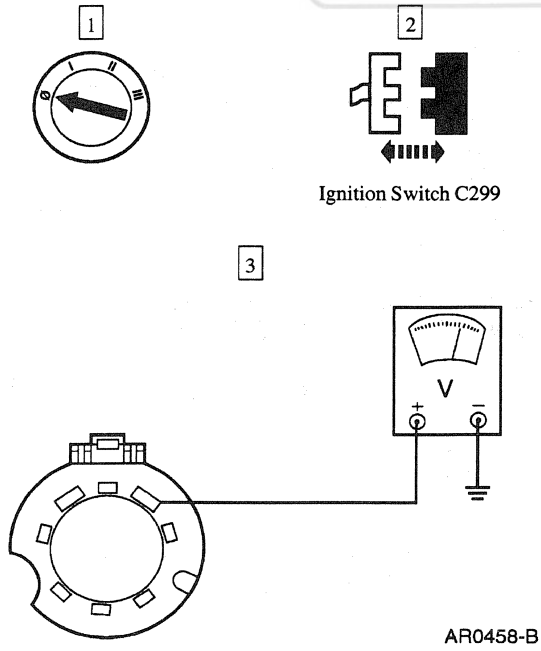	3 Measure the voltage between ignition switch C299-7, circuit 1050 (LG/P), and ground. • Is the voltage greater than 10 volts? → **Yes** GO to **A2**. → **No** GO to **A3**.

(Continued)

DIAGNOSIS AND TESTING (Continued)

PINPOINT TEST A: DTC B1353, DTC B1364 IGNITION SWITCH POWER SUPPLY FAILURE (Continued)

TEST CONDITIONS	TEST DETAILS/RESULTS/ACTIONS
A2 RERUN SELF-TEST	
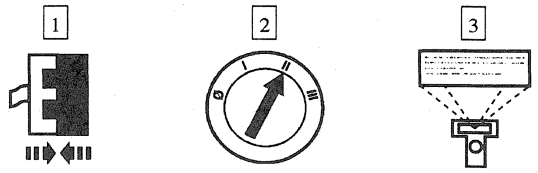 Ignition Switch C299	3 Perform SCIL Module Self-Test. • Are DTCs B1353 and B1364 retrieved? → **Yes** REPLACE the ignition switch; REFER to Ignition Switch. TEST the system for normal operation. → **No** If a single DTC is retrieved, REFER to Steering Column/Ignition/Lighting (SCIL) Module Diagnostic Trouble Code (DTC) Index to continue diagnostics. If no DTCs are retrieved, GO to **A8**.
A3 CHECK THE POWER DISTRIBUTION BOX FUSE 26 (20A)	
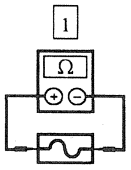 Power Distribution Box Fuse 26 (20A)	• Is the power distribution box fuse 26 (20A) OK? → **Yes** REPAIR circuit 1050 (LG/P). TEST the system for normal operation. → **No** GO to **A4**.
A4 CHECK CIRCUIT 1050 (LG/P) FOR A SHORT TO GROUND	
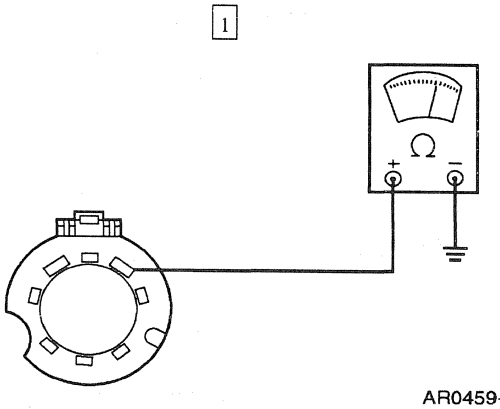 AR0459-B	1 Measure the resistance between the ignition switch C299-7, Circuit 1050 (LG/P), and ground. • Is the resistance greater than 10,000 ohms? → **Yes** GO to **A5**. → **No** REPAIR circuit 1050 (LG/P). TEST the system for normal operation.

Official Licensed Product Ford Motor Company

(Continued)

DIAGNOSIS AND TESTING (Continued)

PINPOINT TEST A: DTC B1353, DTC B1364 IGNITION SWITCH POWER SUPPLY FAILURE (Continued)

TEST CONDITIONS	TEST DETAILS/RESULTS/ACTIONS
A5 CHECK CIRCUIT 158 (BK/PK) FOR A SHORT TO GROUND	
1 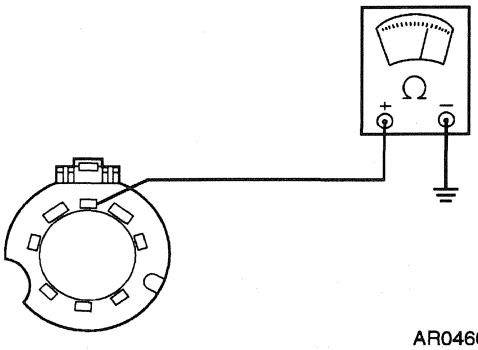 AR0460-B	1 Measure the resistance between ignition switch C299-8, circuit 158 (BK/PK), and ground. • Is the resistance greater than 10,000 ohms? → **Yes** GO to **A7**. → **No** GO to **A6**.
A6 CHECK THE SCIL MODULE	
1 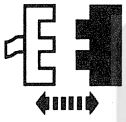 SCIL Module C299 2 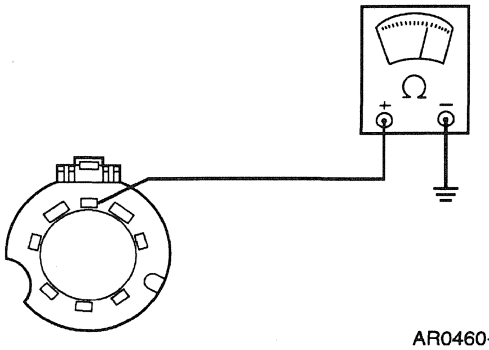 AR0460-B	2 Measure the resistance between ignition switch C299-8, Circuit 158 (BK/PK), and ground. • Is the resistance greater than 10,000 ohms? → **Yes** REPLACE the SCIL module; REFER to Section 419-10. TEST the system for normal operation. → **No** REPAIR circuit 158 (BK/PK) for a short to ground. TEST the system for normal operation.
A7 CHECK CIRCUIT 1044 (W/Y) FOR A SHORT TO GROUND	
1 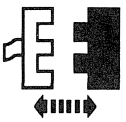	1 Remove fuse junction panel fuses 5 (10A), 11 (10A), and 17 (10A).

(Continued)

Official Licensed Product
Ford Motor Company

DIAGNOSIS AND TESTING (Continued)

PINPOINT TEST A: DTC B1353, DTC B1364 IGNITION SWITCH POWER SUPPLY FAILURE (Continued)

TEST CONDITIONS	TEST DETAILS/RESULTS/ACTIONS
A7 CHECK CIRCUIT 1044 (W/Y) FOR A SHORT TO GROUND (Continued)	
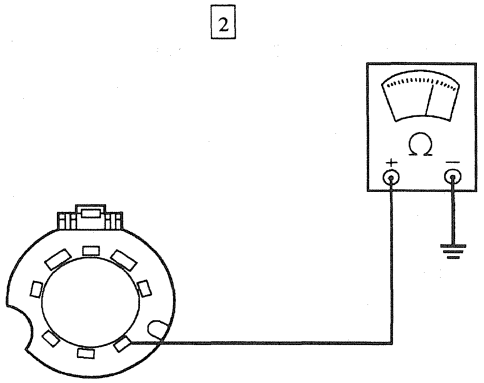	2 Measure the resistance between ignition switch C299-5, Circuit 1044 (W/Y), and ground. • Is the resistance greater than 10,000 ohms? → **Yes** REPLACE the ignition switch; REFER to Ignition Switch. TEST the system for normal operation. → **No** REPAIR circuit 1044 (W/Y). TEST the system for normal operation.
A8 CHECK FOR INTERMITTENT OPERATION	
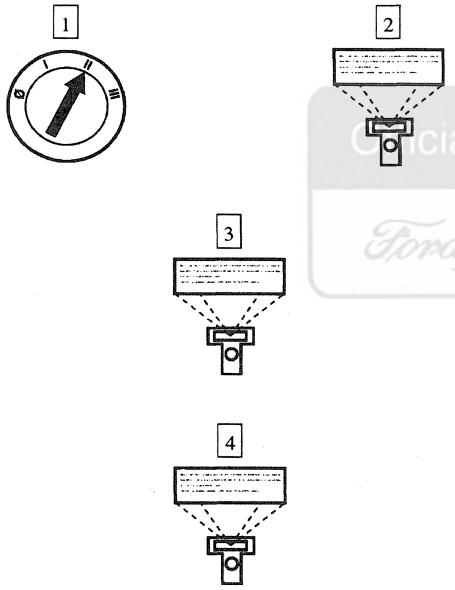	2 Select SCIL module ACTIVE COMMANDS and activate PID LATCH. 3 Monitor SCIL module PID IGN__SCI. 4 Monitor SCIL module PID IGN__KEY. 5 Wiggle the harness and the connectors on circuit 158 (BK/PK), circuit 1044 (W/Y), and circuit 1050 (LG/P). • Did the PID IGN__SCI or PID IGN__KEY change state? → **Yes** REPAIR circuit 158 (BK/PK), circuit 1044 (W/Y) and/or circuit 1050 (LG/P) for a loose or an intermittent connection. TEST the system for normal operation. → **No** The system is operating normally.

Official Licensed Product
Ford Motor Company

DIAGNOSIS AND TESTING (Continued)

PINPOINT TEST B: NO COMMUNICATION WITH THE MODULE — STEERING COLUMN/IGNITION/LIGHTING (SCIL)

TEST CONDITIONS	TEST DETAILS/RESULTS/ACTIONS
B1 CHECK CIRCUIT 875 (BK/LB) FOR AN OPEN	
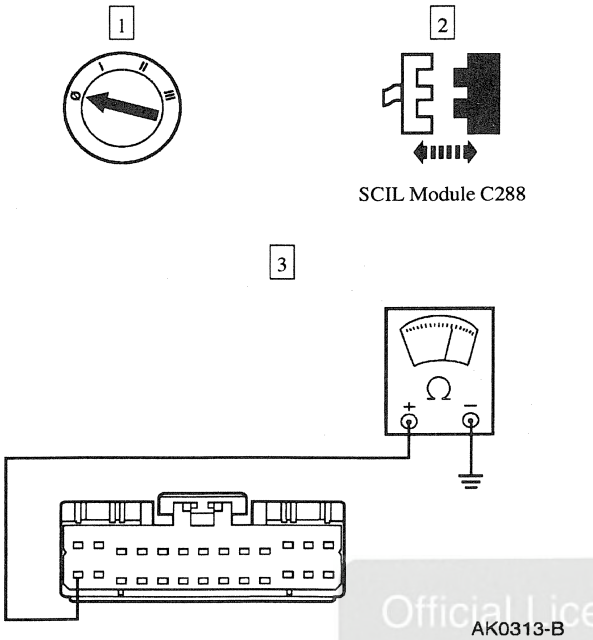	3 Measure the resistance between SCIL module C288-14, circuit 875 (BK/LB), and ground. • Is the resistance less than 5 ohms? → **Yes** GO to **B2**. → **No** REPAIR circuit 875 (BK/LB). TEST the system for normal operation.
B2 CHECK CIRCUIT 57 (BK) FOR AN OPEN	
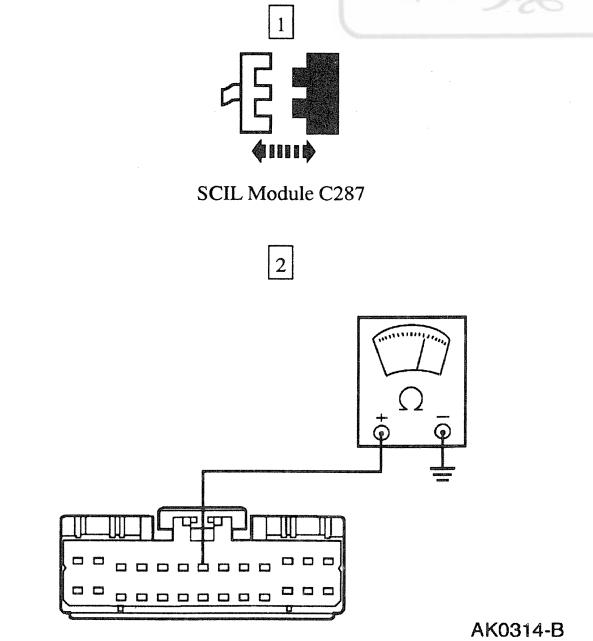	2 Measure the resistance between SCIL module C287-7, circuit 57 (BK), and ground. • Is the resistance less than 5 ohms? → **Yes** GO to **B3**. → **No** REPAIR circuit 57 (BK). TEST the system for normal operation.

Official Licensed Product Ford Motor Company

(Continued)

DIAGNOSIS AND TESTING (Continued)

PINPOINT TEST B: NO COMMUNICATION WITH THE MODULE — STEERING COLUMN/IGNITION/LIGHTING (SCIL) (Continued)

TEST CONDITIONS	TEST DETAILS/RESULTS/ACTIONS
B3 CHECK FOR VOLTAGE TO THE STEERING COLUMN/IGNITION/LIGHTING CONTROL (SCIL) MODULE	
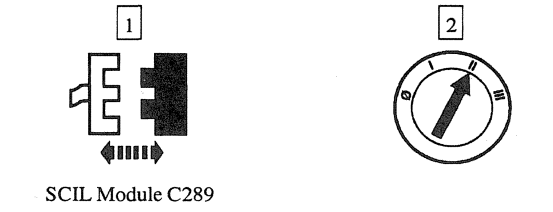 SCIL Module C289	
3 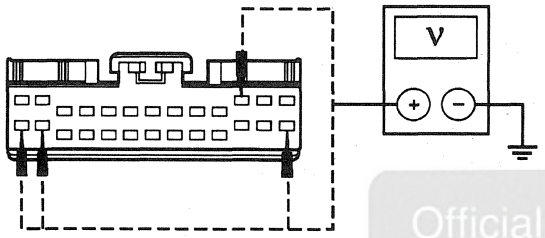 GK4906-A	3 Measure the voltage between the SCIL module C287 pins and ground; and: • C287-14, circuit 906 (R/O). • C287-26, circuit 19 (LB/R). • C287-15, circuit 1055 (W/LG). • C287-11, circuit 1056 (DB/LG).
4 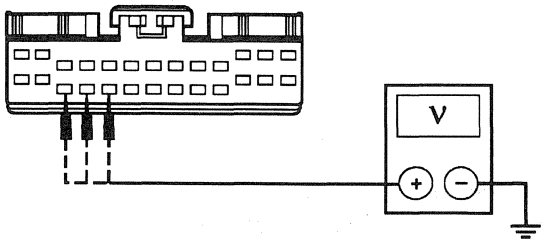 GK6448-A	4 Measure the voltage between the SCIL module C288 pins and ground; and: • C288-16, circuit 251 (BR/O). • C288-18, circuit 158 (BK/PK). • C288-17, circuit 640 (R/Y).

Official Licensed Product
Ford Motor Company

(Continued)

DIAGNOSIS AND TESTING (Continued)

PINPOINT TEST B: NO COMMUNICATION WITH THE MODULE — STEERING COLUMN/IGNITION/LIGHTING (SCIL) (Continued)

TEST CONDITIONS	TEST DETAILS/RESULTS/ACTIONS
B3 CHECK FOR VOLTAGE TO THE STEERING COLUMN/IGNITION/LIGHTING CONTROL (SCIL) MODULE (Continued)	
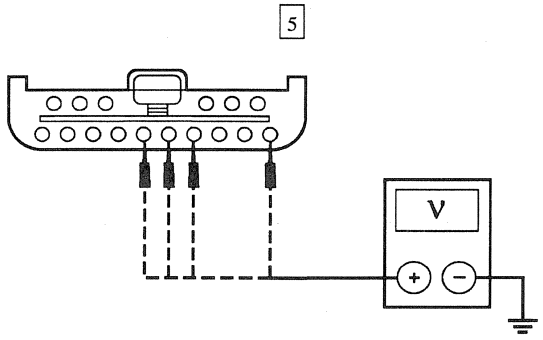 GK6449-A	5 Measure the voltage between the SCIL module C289 pins and ground; and: • C289-5, circuit 1058 (BR/W). • C289-6, circuit 1057 (O/BK). • C289-1, circuit 1046 (T). • C289-4, circuit 906 (R/O). • Are all the voltages greater than 10 volts? → **Yes** REFER to Section 418-00. → **No** REPAIR the circuit in question. TEST the system for normal operation.

PINPOINT TEST C: DTC B1353 — IGNITION KEY-IN CIRCUIT OPEN

TEST CONDITIONS	TEST DETAILS/RESULTS/ACTIONS
C1 CHECK FOR ADDITIONAL DTCs	
	2 Perform SCIL module Self-Test. • Are DTCs B1353 and B1364 retrieved? → **Yes** GO to Pinpoint Test A. → **No** GO to **C2**.
C2 CHECK FOR CONTINUOUS DTC ONLY	
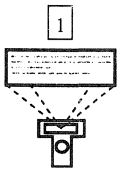	1 Perform SCIL module Self-Test. • Is DTC B1353 retrieved? → **Yes** GO to **C3**. → **No** GO to **C7**.

(Continued)

Official Licensed Product Ford Motor Company

DIAGNOSIS AND TESTING (Continued)

PINPOINT TEST C: DTC B1353 — IGNITION KEY-IN CIRCUIT OPEN (Continued)

TEST CONDITIONS	TEST DETAILS/RESULTS/ACTIONS
C3 CHECK PID IGN__KEY	
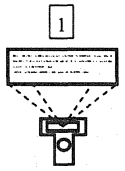	1 Monitor SCIL module PID IGN__KEY. • Does the PID IGN__KEY read IN? → **Yes** GO to **C4**. → **No** GO to **C5**.
C4 RUN SELF-TEST	
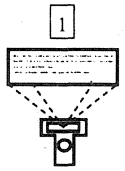	1 Perform SCIL module Self-Test. • Is DTC B1353 retrieved? → **Yes** REPLACE the SCIL module; REFER to Section 419-10. TEST the system for normal operation. → **No** GO to **C7**.
C5 CHECK THE INPUT TO THE SCIL MODULE	
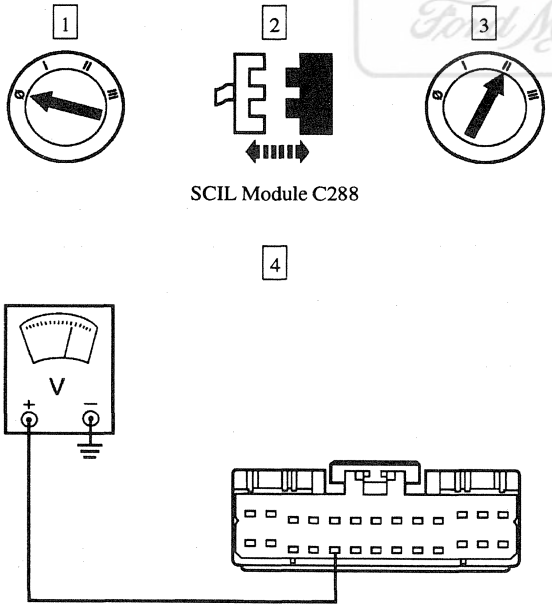	4 Measure the voltage between SCIL module C288-18, circuit 158 (BK/PK), and ground. • Is the voltage greater than 10 volts? → **Yes** REPLACE the SCIL module; REFER to Section 419-10. TEST the system for normal operation. → **No** GO to **C6**.

Official Licensed Product Ford Motor Company

(Continued)

DIAGNOSIS AND TESTING (Continued)

PINPOINT TEST C: DTC B1353 — IGNITION KEY-IN CIRCUIT OPEN (Continued)

TEST CONDITIONS	TEST DETAILS/RESULTS/ACTIONS
C6 CHECK CIRCUIT 158 (BK/PK) FOR AN OPEN	
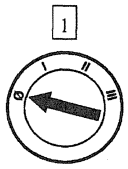 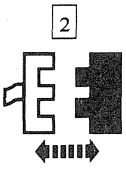 Ignition Switch C299 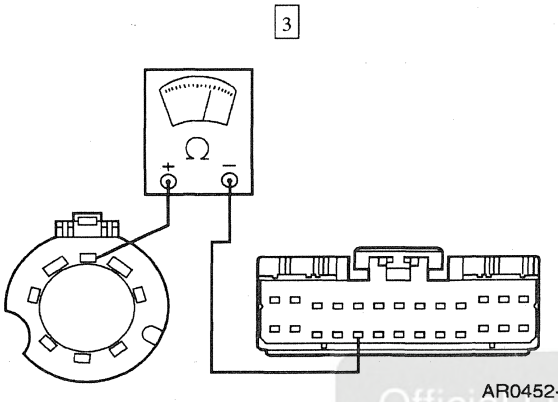	3 Measure the resistance between ignition switch C299-8, circuit 158 (BK/PK), and SCIL module C288-18, circuit 158 (BK/PK). • Is the resistance less than 5 ohms? → **Yes** PERFORM the Ignition Switch Component Test. REFER to Component Test. REPLACE as necessary. TEST the system for normal operation. → **No** REPAIR circuit 158 (BK/PK). TEST the system for normal operation.
C7 CHECK FOR INTERMITTENT OPERATION	
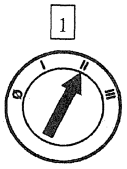 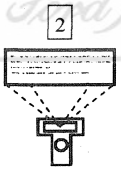 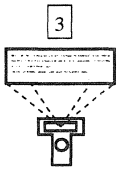	2 Select SCIL module ACTIVE COMMANDS and activate PID LATCH. 3 Monitor SCIL module PID IGN__KEY. 4 Wiggle the harness and the connectors on Circuit 158 (BK/PK). • Did the PID IGN__KEY change state? → **Yes** REPAIR circuit 158 (BK/PK) for a loose or an intermittent connection. TEST the system for normal operation. → **No** The system is operating normally.

Official Licensed Product Ford Motor Company

DIAGNOSIS AND TESTING (Continued)

PINPOINT TEST D: DTC B1360 — IGNITION RUN/ACC CIRCUIT OPEN

TEST CONDITIONS	TEST DETAILS/RESULTS/ACTIONS
D1 CHECK FOR CONTINUOUS DTC ONLY	
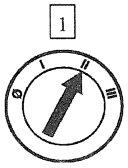 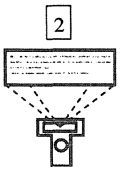	2 Perform SCIL module Self-Test. • Is DTC B1360 retrieved? → **Yes** GO to **D2**. → **No** GO to **D7**.
D2 CHECK THE PID IGN__SCI	
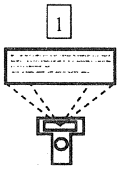	1 Monitor SCIL module PID IGN__SCI. • Does the PID IGN__SCI read RUN? → **Yes** GO to **D3**. → **No** GO to **D4**.
D3 RUN SELF-TEST	
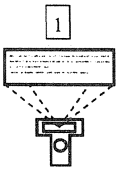	1 Perform SCIL module Self-Test. • Is DTC B1360 retrieved? → **Yes** REPLACE the SCIL module; REFER to Section 419-10. TEST the system for normal operation. → **No** GO to **D7**.
D4 CHECK THE IGNITION SWITCH SUPPLY	
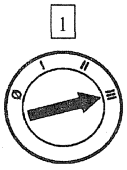	• Did the starter motor engage? → **Yes** GO to **D5**. → **No** REFER to Section 303-06.

(Continued)

Official Licensed Product
Ford Motor Company®

DIAGNOSIS AND TESTING (Continued)

PINPOINT TEST D: DTC B1360 — IGNITION RUN/ACC CIRCUIT OPEN (Continued)

TEST CONDITIONS	TEST DETAILS/RESULTS/ACTIONS
D5 CHECK THE INPUT TO SCIL MODULE	
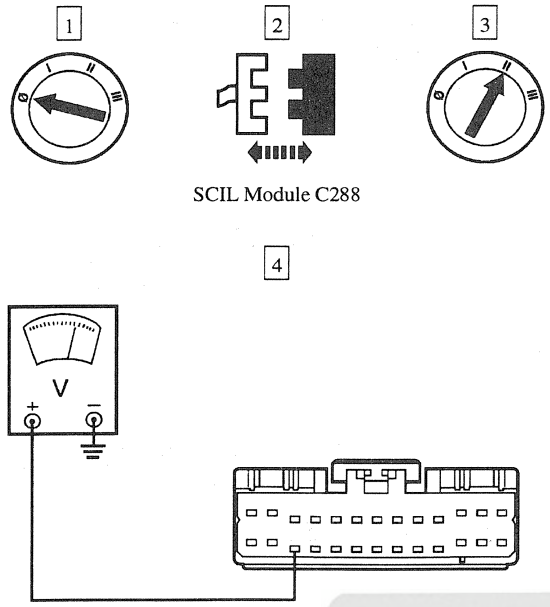	4 Measure the voltage between the SCIL module C288-16, circuit 251 (BR/O), and ground. • Is the voltage greater than 10 volts? → **Yes** REPLACE the SCIL module; REFER to Section 419-10. TEST the system for normal operation. → **No** GO to **D6**.
D6 CHECK CIRCUIT 251 (BR/O) FOR AN OPEN	
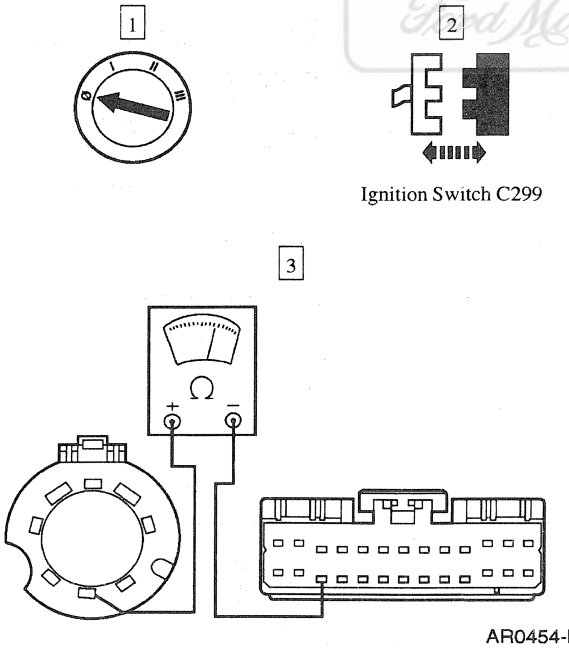	3 Measure the resistance between ignition switch C299-4, circuit 251 (BR/O), and SCIL module C288-16, circuit 251 (BR/O). • Is the resistance less than 5 ohms? → **Yes** REPLACE the ignition switch; REFER to Ignition Switch. TEST the system for normal operation. → **No** REPAIR circuit 251 (BR/O). TEST the system for normal operation.

Official Licensed Product Ford Motor Company

(Continued)

DIAGNOSIS AND TESTING (Continued)

PINPOINT TEST D: DTC B1360 — IGNITION RUN/ACC CIRCUIT OPEN (Continued)

TEST CONDITIONS	TEST DETAILS/RESULTS/ACTIONS
D7 CHECK FOR INTERMITTENT OPERATION	
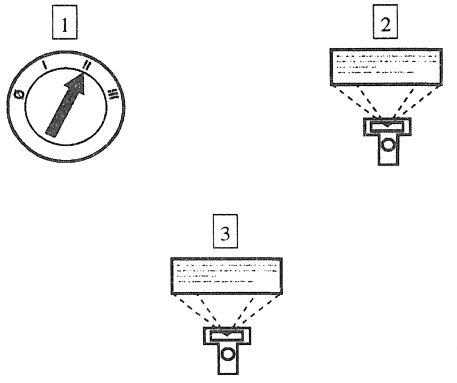	2 Select SCIL module ACTIVE COMMANDS and activate PID LATCH. 3 Monitor SCIL module PID IGN__SCI. 4 Wiggle the harness and the connectors on Circuit 251 (BR/O). • Did the PID IGN__SCI latch to start? → **Yes** REPAIR circuit 251 (BR/O) for a loose or an intermittent connection. TEST the system for normal operation. → **No** The system is operating normally.

Official Licensed Reproduction
Ford Motor Company

PINPOINT TEST E: DTC B1364 — IGNITION/START CIRCUIT OPEN

TEST CONDITIONS	TEST DETAILS/RESULTS/ACTIONS
E1 CHECK FOR ADDITIONAL DTCS	
	2 Perform SCIL module Self-Test. • Are DTCs B1353 and B1364 retrieved? → **Yes** GO to Pinpoint Test A. → **No** GO to **E2**.
E2 CHECK FOR CONTINUOUS DTC ONLY	
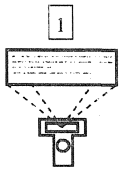	1 Perform SCIL module Self-Test. • Is DTC B1364 retrieved? → **Yes** GO to **E3**. → **No** GO to **E10**.

(Continued)

DIAGNOSIS AND TESTING (Continued)

PINPOINT TEST E: DTC B1364 — IGNITION/START CIRCUIT OPEN (Continued)

TEST CONDITIONS	TEST DETAILS/RESULTS/ACTIONS
E3 CHECK PID IGN__SCI	
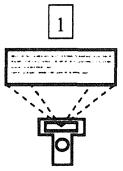	1 Monitor SCIL module PID IGN__SCI. • Does the PID IGN__SCI read RUN? → **Yes** GO to **E4**. → **No** GO to **E5**.
E4 RERUN SELF-TEST	
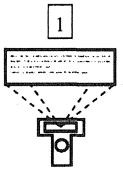	1 Perform SCIL module Self-Test. • Is DTC B1364 retrieved? → **Yes** REPLACE the SCIL module; REFER to Section 419-10. TEST the system for normal operation. → **No** GO to **E10**.
E5 CHECK THE WARNING INDICATORS	
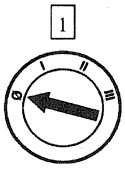	• Do the engine, brake and oil pressure warning indicators illuminate? → **Yes** GO to **E9**. → **No** GO to **E6**.

Official Licensed Product Ford Motor Company

(Continued)

DIAGNOSIS AND TESTING (Continued)

PINPOINT TEST E: DTC B1364 — IGNITION/START CIRCUIT OPEN (Continued)

TEST CONDITIONS	TEST DETAILS/RESULTS/ACTIONS
E6 CHECK THE FUSE PANEL FUSE 5 (10A)	
1 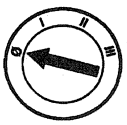 2 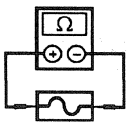 Fuse Junction Panel Fuse 5 (10A)	• Is Fuse Junction Panel Fuse 5 (10A) OK? → **Yes** GO to E7. → **No** REPAIR circuit 640 (R/Y). TEST the system for normal operation.

(Continued)

Official Licensed Product
Ford Motor Company

DIAGNOSIS AND TESTING (Continued)

PINPOINT TEST E: DTC B1364 — IGNITION/START CIRCUIT OPEN (Continued)

TEST CONDITIONS	TEST DETAILS/RESULTS/ACTIONS
E7 CHECK THE IGNITION SWITCH INPUT TO THE FUSE JUNCTION PANEL	
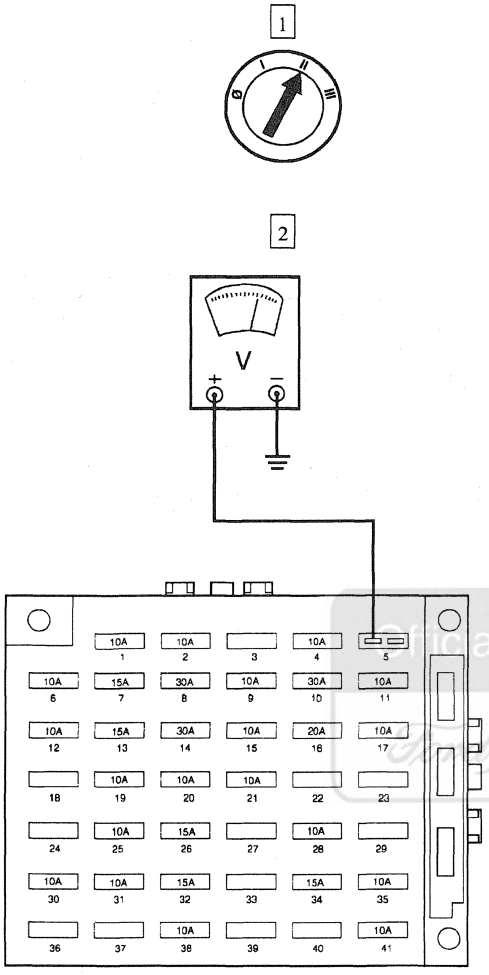 AR0455-A	2 Measure the voltage between the input cavity of the fuse junction panel Fuse 5 (10A), and ground. • Is the voltage greater than 10 volts? → **Yes** REPAIR circuit 640 (R/Y). TEST the system for normal operation. → **No** GO to **E8**.

Official Licensed Product Ford Motor Company

(Continued)

DIAGNOSIS AND TESTING (Continued)

PINPOINT TEST E: DTC B1364 — IGNITION/START CIRCUIT OPEN (Continued)

TEST CONDITIONS	TEST DETAILS/RESULTS/ACTIONS
E8 CHECK CIRCUIT 1044 (W/Y) FOR AN OPEN	
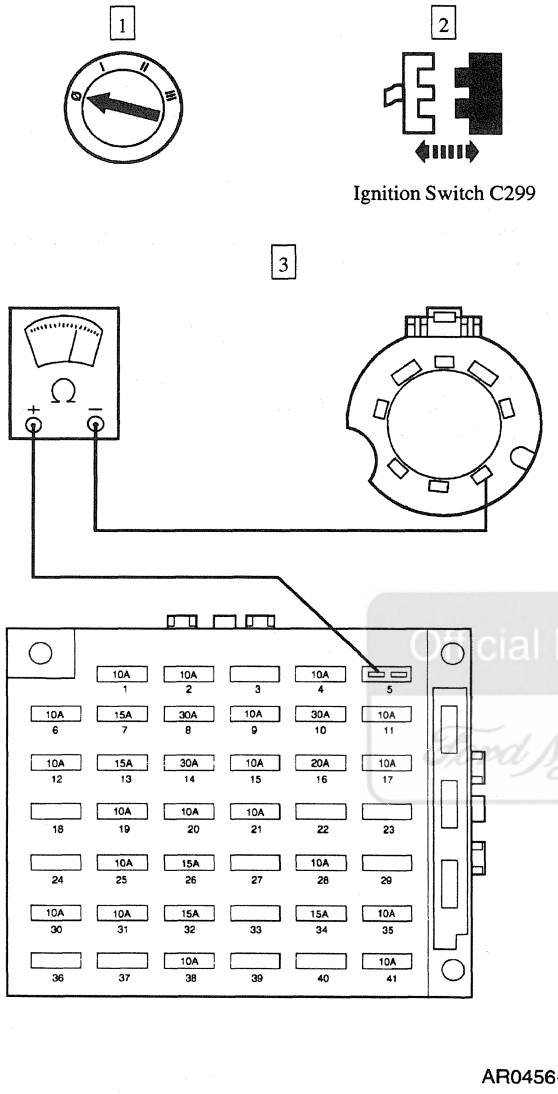 AR0456-B	3 Measure the resistance between the input cavity of the fuse junction panel Fuse 5 (10A), and ignition switch C299-5, Circuit 1044 (W/Y). • Is the resistance less than 5 ohms? → **Yes** REPLACE the ignition switch; REFER to Ignition Switch. TEST the system for normal operation. → **No** REPAIR circuit 1044 (W/Y). TEST the system for normal operation.

Official Licensed Product Ford Motor Company

(Continued)

DIAGNOSIS AND TESTING (Continued)

PINPOINT TEST E: DTC B1364 — IGNITION/START CIRCUIT OPEN (Continued)

TEST CONDITIONS	TEST DETAILS/RESULTS/ACTIONS
E9 CHECK THE SCIL MODULE RUN/START INPUT	
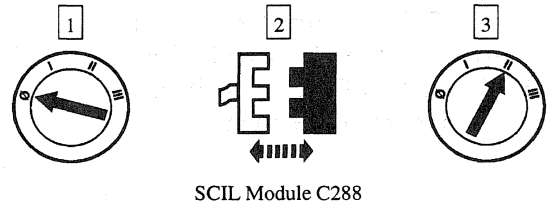 SCIL Module C288 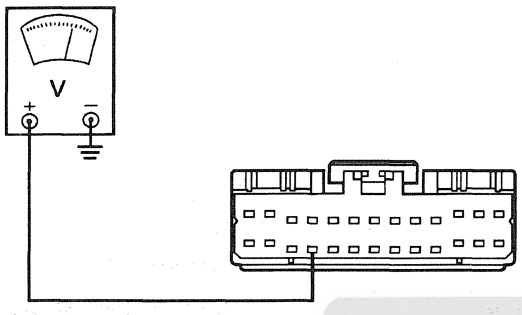 AR0457-B	4 Measure the voltage between SCIL module C288-17, Circuit 640 (R/Y), and ground. • Is the voltage greater than 10 volts? → **Yes** REPLACE the SCIL module. TEST the system for normal operation. → **No** REPAIR circuit 640 (R/Y) for an open between the fuse junction panel and the SCIL module. TEST the system for normal operation.
E10 CHECK FOR INTERMITTENT OPERATION	
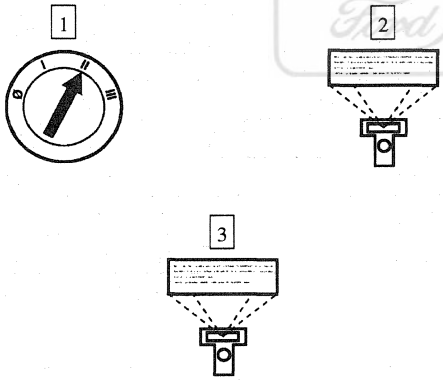	2 Select SCIL module ACTIVE COMMANDS and activate PID LATCH. 3 Monitor SCIL module PID IGN__SCI. 4 Wiggle the harness and the connectors on Circuit 640 (R/Y) and Circuit 1044 (W/Y). • Does the PID IGN__SCI latch to ACCSSY? → **Yes** REPAIR circuit 640 (R/Y) and/or Circuit 1044 (W/Y) for a loose or an intermittent connection. TEST the system for normal operation. → **No** The system is operating normally.

Official Licensed Product
Ford Motor Company

DIAGNOSIS AND TESTING (Continued)

Component Test

Ignition Switch Continuity Check

Refer to the EVTM, Cell 149 for the Ignition Switch Continuity Test.

Multi-Function Switch

Multi-Function Switch — Component Side

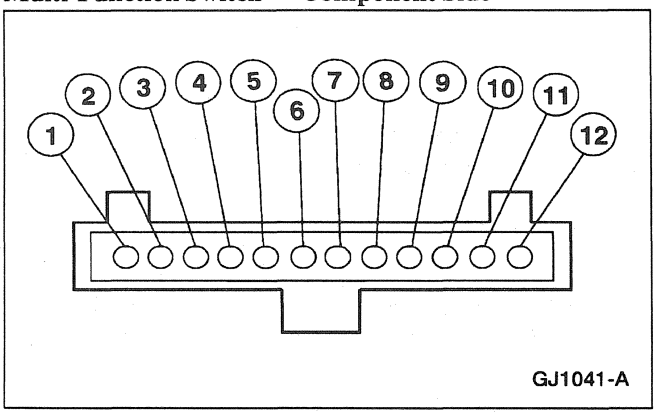

1. Measure the resistance between the multi-function switch terminals, Refer to the following table.

   If the resistances are as specified, multi-function switch is OK. If the resistances are not as specified, REPLACE the multi-function switch; REFER to Multi-Function Switch. TEST the system for normal operation.

Function	Multi-Function Switch Position	Terminals	Resistance Values
Washer Switch	ON	2 and 3	Less than 5 ohms
	OFF	2 and 3	Greater than 10,000 Ohms
Wiper Switch	OFF	1 and 2	Approximately 47,000 Ohms
	INT	1 and 2	Approximately 11,000 Ohms
	INT	1 and 3, while smoothly rotating the interval wiper	Between 3,300 ohms and 103,300 Ohms
	LO	1 and 2	Approximately 4,000 Ohms
	HI	1 and 2	Less than 5 ohms
Hazard	ON	4 and 5	Less than 5 ohms
	OFF	4 and 5	Greater than 10,000 Ohms
Left Turn Switch/Cornering Switch	Place the Multi-Function Switch in the LEFT TURN Position	4 and 5	Between 314 and 380 ohms
Right Turn Switch/Cornering Switch	Place the Multi-Function Switch in the RIGHT TURN Position	4 and 5	Between 2090 and 2530 ohms
High/Low Beam	Place the Multi-Function Switch in the HI BEAM Position	5 and 7	Between 2090 and 2530 ohms
Flash-To-Pass	Hold the Multi-Function Switch in the FLASH-TO-PASS Position	5 and 7	Between 314 and 380 ohms
Tilt Steering Switch	Hold the Multi-Function Switch in the UP Position	11 and 12	Between 779 and 943 ohms
	Hold the Multi-Function Switch in the DOWN Position	11 and 12	Between 314 and 380 ohms

Official Licensed Product Ford Motor Company

(Continued)

DIAGNOSIS AND TESTING (Continued)

Function	Multi-Function Switch Position	Terminals	Resistance Values
	Hold the Multi-Function Switch in the OUT Position	11 and 12	Between 2090 and 2530 ohms
	Hold the Multi-Function Switch in the IN Position	11 and 12	Between 1425 and 1725 ohms

REMOVAL AND INSTALLATION

Multi-Function Switch

Removal and Installation

Remove the air bag sliding contact; refer to Section 501-20B.

Ignition Switch

Removal

1. Remove the ignition switch lock cylinder; refer to Section 211-04.

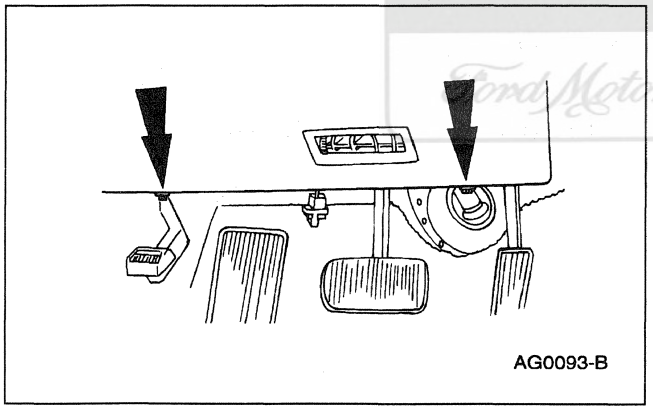

2. Remove the bolts and the instrument panel steering column cover (04459).

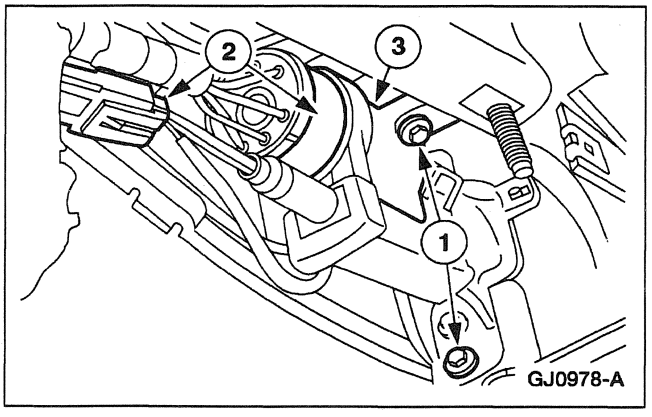

3. Position the ignition switch cylinder bracket aside.
   1 Remove the bolts.
   2 Disconnect the electrical connectors.
   3 Position the ignition switch cylinder bracket aside.

Official Licensed Product
Ford Motor Company

REMOVAL AND INSTALLATION (Continued)

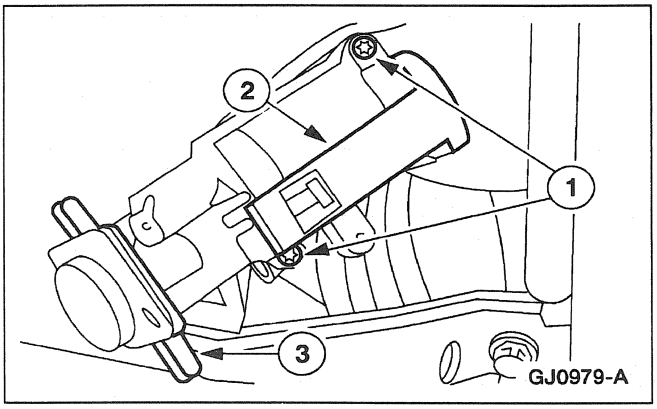

4. Remove the ignition switch cylinder bracket.
   1 Remove the bolts.
   2 Disconnect the ignition/shifter interlock cable.
   3 Remove the ignition switch cylinder bracket.

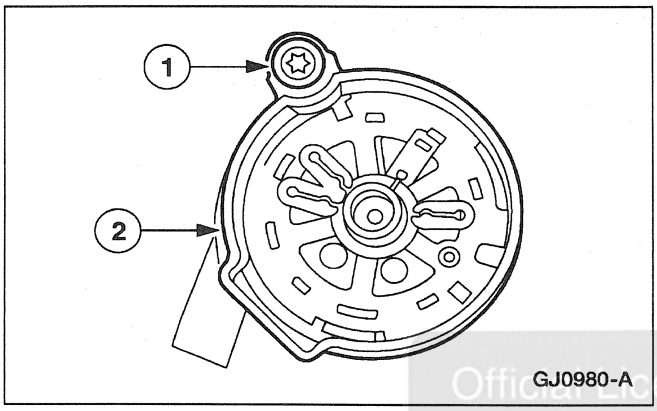

5. Remove the ignition switch.
   1 Remove the bolt.
   2 Remove the ignition switch.

Official Licensed Product
Ford Motor Company

Installation

1. To install, reverse the removal procedure.

GROUP

POWERTRAIN 3

SECTION TITLE	PAGE
Engine	303-01-1
Engine Cooling	303-03-1
Fuel Charging and Controls	303-04-1
Accessory Drive	303-05-1
Starting System	303-06-1
Engine Ignition	303-07-1
Engine Emission Control	303-08-1
Intake Air	303-12-1
Evaporative Emissions	303-13-1
Electronic Engine Controls	303-14-1
Automatic Transmission — 4R70W	307-01-1
Transaxle/Transmission Cooling	307-02-1
Automatic Transaxle/Transmission External Controls	307-05-1
Exhaust Components — General Information	309-00-1
Fuel System — General Information	310-00-1
Fuel Tank and Lines	310-01-1
Acceleration Control	310-02-1
Vehicle Speed Control	310-03-1

Ford Motor Company Proprietary Product

SECTION 303-01 Engine

VEHICLE APPLICATION: Mark VIII

SUBJECT	PAGE
DESCRIPTION AND OPERATION	
Engine	303-01-4
Engine Component View	303-01-6
DIAGNOSIS AND TESTING	
Engine	303-01-15
Component Tests	303-01-19
Inspection and Verification	303-01-16
Symptom Chart	303-01-16
IN-VEHICLE REPAIR	
Camshaft Timing Chains — Timing Sprockets, Tensioners and Guides	303-01-62
Camshafts	303-01-70
Connecting Rod Bearings	303-01-83
Crankshaft Rear Oil Seal and Slinger	303-01-87
Engine Front Cover	303-01-47
Exhaust Manifold —LH Side	303-01-76

SUBJECT PAGE

Exhaust Manifold —RH Side 303-01-74
Flywheel 303-01-85
Front Oil Seal 303-01-41
Hydraulic Lash Adjusters 303-01-39
Intake Manifold — Upper, Lower and IMRC 303-01-31
Oil Filter Adapter and Oil Pressure Sensor 303-01-89
Oil Level Indicator Tube 303-01-91
Oil Pan and Oil Pump Screen Cover and Tube 303-01-78
Oil Pump 303-01-82
Roller Followers 303-01-38
Valve Cover —LH 303-01-26
Valve Cover —RH 303-01-30
Valve Spring — Retainer and Valve Stem Seal 303-01-40
Water Pump 303-01-72

REMOVAL AND INSTALLATION

Engine 303-01-93

DISASSEMBLY AND ASSEMBLY

Engine 303-01-116

ASSEMBLY

Engine 303-01-138

DISASSEMBLY AND ASSEMBLY OF SUBASSEMBLIES

Cylinder Head 303-01-176
Piston Pin Connecting Rod 303-01-182

GENERAL PROCEDURES

Bearing Inspection 303-01-208
Camshaft End Play 303-01-187
Camshaft Lobe Lift 303-01-188
Camshaft Lobe Surface 303-01-188
Compression Test 303-01-185
Connecting Rod Bearing Journal Clearance 303-01-197
Connecting Rod Bend 303-01-196
Connecting Rod Bushing Diameter 303-01-196
Connecting Rod Cleaning 303-01-195
Connecting Rod Large End Bore 303-01-195
Connecting Rod Twist 303-01-196
Crankshaft Connecting Rod Journal Diameter 303-01-194
Crankshaft Connecting Rod Journal Taper 303-01-194
Crankshaft End Play 303-01-189
Crankshaft Main Bearing Journal Diameter 303-01-189
Crankshaft Runout 303-01-190
Cylinder Block Core Plug Replacement 303-01-206
Cylinder Block Distortion 303-01-205
Cylinder Bore Cleaning 303-01-206
Cylinder Bore Honing 303-01-205
Cylinder Bore Out-of-Round 303-01-191
Cylinder Bore Taper 303-01-190

Ford Motor Company

SUBJECT PAGE

Exhaust Manifold Inspection 303-01-207
Flywheel Inspection 303-01-204
Hydraulic Lash Adjuster Leakdown Test 303-01-198
Piston Diameter 303-01-192
Piston Inspection 303-01-191
Piston Pin Bore Diameter 303-01-192
Piston Pin Diameter 303-01-195
Piston Ring-to-Groove Clearance 303-01-193
Piston Selection 303-01-193
Piston to Cylinder Bore Clearance 303-01-193
Roller Follower Inspection 303-01-198
Valve Guide Inner Diameter 303-01-201
Valve Inspection 303-01-201
Valve Seat Inspection 303-01-203
Valve Seat Runout 303-01-204
Valve Seat Width 303-01-203
Valve Spring Free Length 303-01-202
Valve Spring Installed Length 303-01-202
Valve Spring Strength 303-01-202
Valve Stem Diameter 303-01-199
Valve Stem to Valve Guide Clearance 303-01-200
SPECIFICATIONS 303-01-208

Official Licensed Product
Ford Motor Company

DESCRIPTION AND OPERATION

Engine

⚠ WARNING: DO NOT OPERATE THE ENGINE WITH THE HOOD (16612) OPEN UNTIL THE FAN BLADE (8600) HAS BEEN FIRST EXAMINED FOR POSSIBLE CRACKS AND SEPARATION.

The 4.6L (4V)(281 CID) is a V-8 engine with the following features:

- dual overhead camshafts (6250)
- four valves per cylinder
- sequential multiport fuel injection (SFI)
- an aluminum intake manifold (9424)
- aluminum cylinder heads (6049)
- a cast aluminum, 90-degree V- cylinder block (6010)
- the camshafts are individually chain-driven with a hydraulic timing chain tensioner (6L266) on each timing chain
- the electronic ignition system with eight ignition coils (12029)

Engine Identification

Always refer to these labels when replacement parts are required or when checking engine calibrations. The engine parts often differ within a CID family. Verification of the identification codes will ensure that the proper parts are obtained. These codes contain all the pertinent information relating to the dates, optional equipment and revisions. The Ford Master Parts Catalog contains a complete listing of the codes and their application.

Engine Code Information

The engine code information label, located on the side of the valve cover (6582) and the front side of the valve cover, contains the following:

- engine build date
- engine plant code
- engine code

Exhaust Emission Control System

Operation and required maintenance of the exhaust emission control devices used on this engine is covered in the Powertrain Control/Emissions Diagnosis Manual [1].

Induction System

The sequential multiport fuel injection (SFI) provides the fuel/air mixture needed for combustion in the cylinders. The eight solenoid-operated fuel injectors:

- are mounted in the fuel injection supply manifold (9F792) and the intake manifold runner control (IMRC) assemblies above the cylinder heads.
- meter fuel into the air intake stream in accordance with engine demand.
- are positioned so that their tips direct fuel just ahead of the engine intake valves (6507).
- are connected in series with the fuel pressure regulator (9C968).
- supply fuel from the fuel tank (9002) by a fuel pump (9350) mounted in the fuel tank.

A constant fuel pressure drop is maintained across the fuel injectors (9F593) by the fuel pressure regulator. The fuel pressure regulator :

- is positioned downstream from the fuel injectors on the fuel injection supply manifold.

Excess fuel supplied by the fuel pump, but not needed by the engine, is returned to the fuel tank by a fuel return line.

Official Licensed Product

Valve Train

The valve train operates as follows:

- Hydraulic ball tip hydraulic lash adjusters provide automatic lash adjustment.
- Roller followers ride on the camshaft lobes, transferring the up-and-down motion of the camshafts to the valves in the cylinder heads.

Positive Crankcase Ventilation System

All engines are equipped with a closed-type positive crankcase ventilation system recycling the crankcase vapors to the upper intake manifold.

Engine Lubrication System

The engine lubrication system operates as follows:

- Oil is drawn into the oil pump (6600) through the oil pump screen cover and tube (6622) in the sump of the oil pan.
- Oil is pumped through the oil bypass filter (6714) on the left front side of the cylinder block.

1 Can be purchased as a separate item.

DESCRIPTION AND OPERATION (Continued)

- Oil enters the main oil gallery where it is distributed to the crankshaft main journals and to both cylinder heads.
- From the main journals, the oil is routed through cross-drilled passages in the crankshaft (6303) to lubricate the connecting rod bearings (6211). Controlled leakage through the crankshaft main bearings (6333) and connecting rod bearings is slung radially outward to cool and lubricate the cylinder walls as well as the entire connecting rod (6200), piston (6108) and piston rings assembly.
- The left cylinder head is fed from a drilling into the supply passage feeding the main gallery at the front of the cylinder block. The right cylinder head is fed from a drilling into the rear of the main gallery. Main gallery pressure is reduced as it enters the cylinder head galleries through fixed repairable orifices located at the upper part of the feed passages. It is this reduced pressure in the cylinder head galleries which feeds the camshaft journals, the hydraulic lash adjusters and the primary and secondary timing chain tensioners.
- The camshaft lobe and roller followers are lubricated by splash created through valve train operation.

Oil Pump

The lubrication system of the 4.6L (4V) engine is designed to provide optimum oil flow to critical components of the engine through its entire operating range. The heart of the system is a positive displacement internal gear oil pump using top seal rotors.

Generically this design is known as a gerotor pump, which operates as follows:

- The oil pump is mounted on the front face of the cylinder block.
- The inner rotor is piloted on the crankshaft post and is driven through flats on the crankshaft.
- System pressure is limited by an integral, internally-vented relief valve which directs the bypassed oil back to the inlet side of the oil pump.
- Oil pump displacement has been selected to provide adequate volume to ensure proper oil pressure both at hot idle and maximum speed.
- The relief valve calibration protects the system from excessive pressure during high viscosity conditions.
- The relief valve is designed to provide adequate connecting rod bearing lubrication under high-temperature and high-speed conditions.

Engine Cooling System

The engine cooling system includes the following:

- radiator (8005)
- water pump (8501)
- the electric cooling fan motor and fan blade, is activated by the variable control module
- radiator coolant recovery reservoir (8A080), located beside the radiator, which aids in maintaining the correct volume of engine coolant
- water thermostat (8575)
- upper radiator hose (8260)
- lower radiator hose (8286)
- heater water hoses (18472)

Drive Belt System

The 4.6L (4V) DOHC engine is equipped with a serpentine drive belt (8620). To ensure maximum life, a replacement drive belt should be of the same type as originally installed.

- The accessories mounted on the front of the engine are belt-driven by the crankshaft.
- The serpentine drive belt is routed over each accessory pulley, driven by the crankshaft pulley (6312) bolted to the crankshaft.

For repair procedures, including tensioning, refer to Section 303-05.

Official Licensed Product
Ford Motor Company

DESCRIPTION AND OPERATION (Continued)

Engine Component View

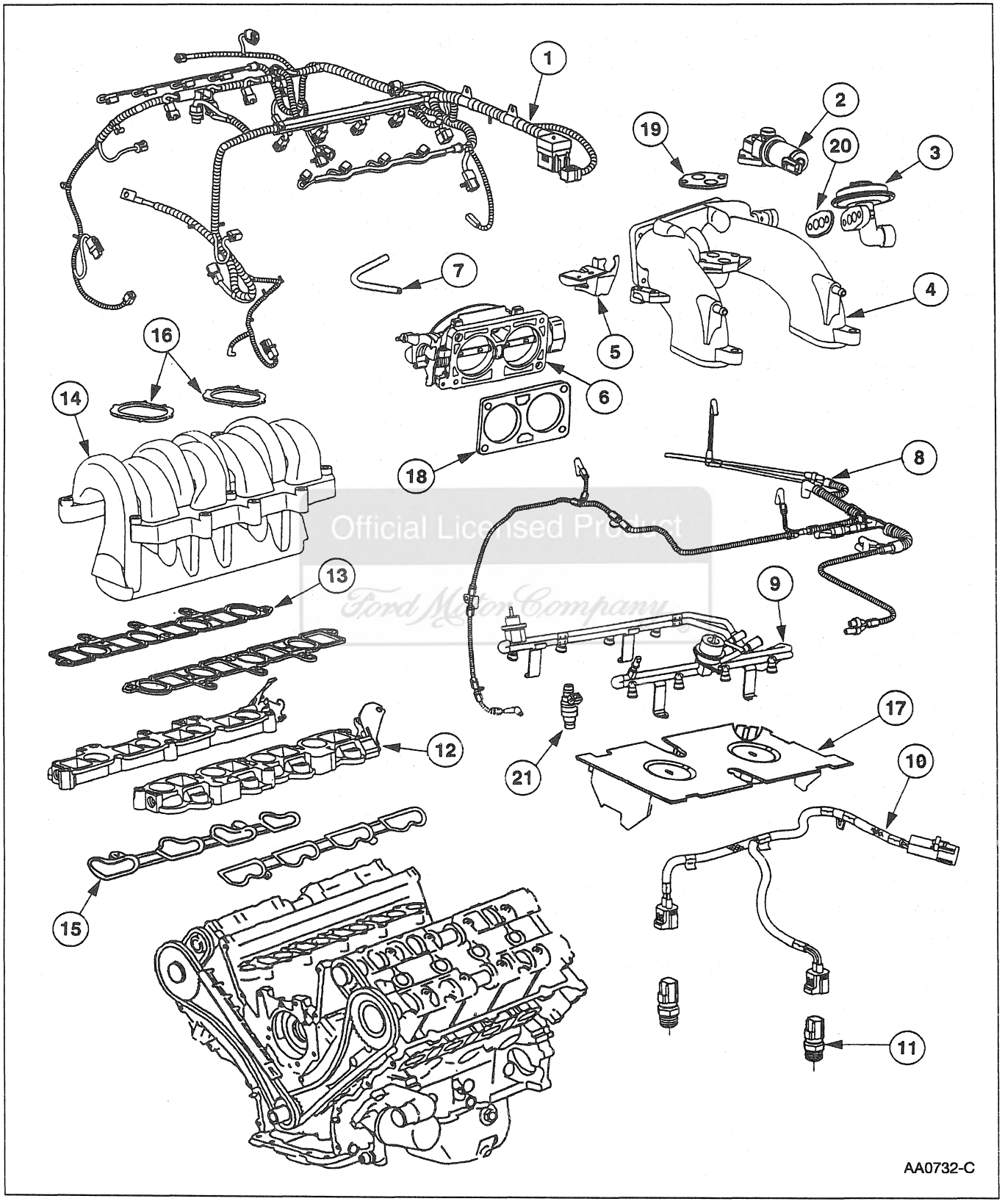

Official Licensed Product
Ford Motor Company

DESCRIPTION AND OPERATION (Continued)

Item	Part Number	Description
1	12B637	Wiring Harness
2	9F715	Idle Air Control Valve
3	9D475	EGR Valve
4	9A448	Upper Intake Manifold
5	9723	Accelerator Cable Bracket
6	9E926	Throttle Body
7	9G297	Evaporative Emission Hose
8	9E498	Main Emission Vacuum Control Connector
9	9F792	Fuel Injection Supply Manifold
10	12B559	Wire Harness
11	12A699	Knock Sensor

(Continued)

Item	Part Number	Description
12	9U531	IMRC Housing
13	9H486	Lower Intake Manifold to IMRC Gasket
14	9J447	Lower Intake Manifold
15	9461	Intake Manifold Gasket
16	9L437	Intake Manifold Water Connection Gasket
17	6N041	Noise Shield
18	9E936	Throttle Body Gasket
19	9F670	Idle Air Control Gasket
20	9D476	EGR Valve Gasket
21	9F593	Fuel Injector

Official Licensed Product
Ford Motor Company

DESCRIPTION AND OPERATION (Continued)

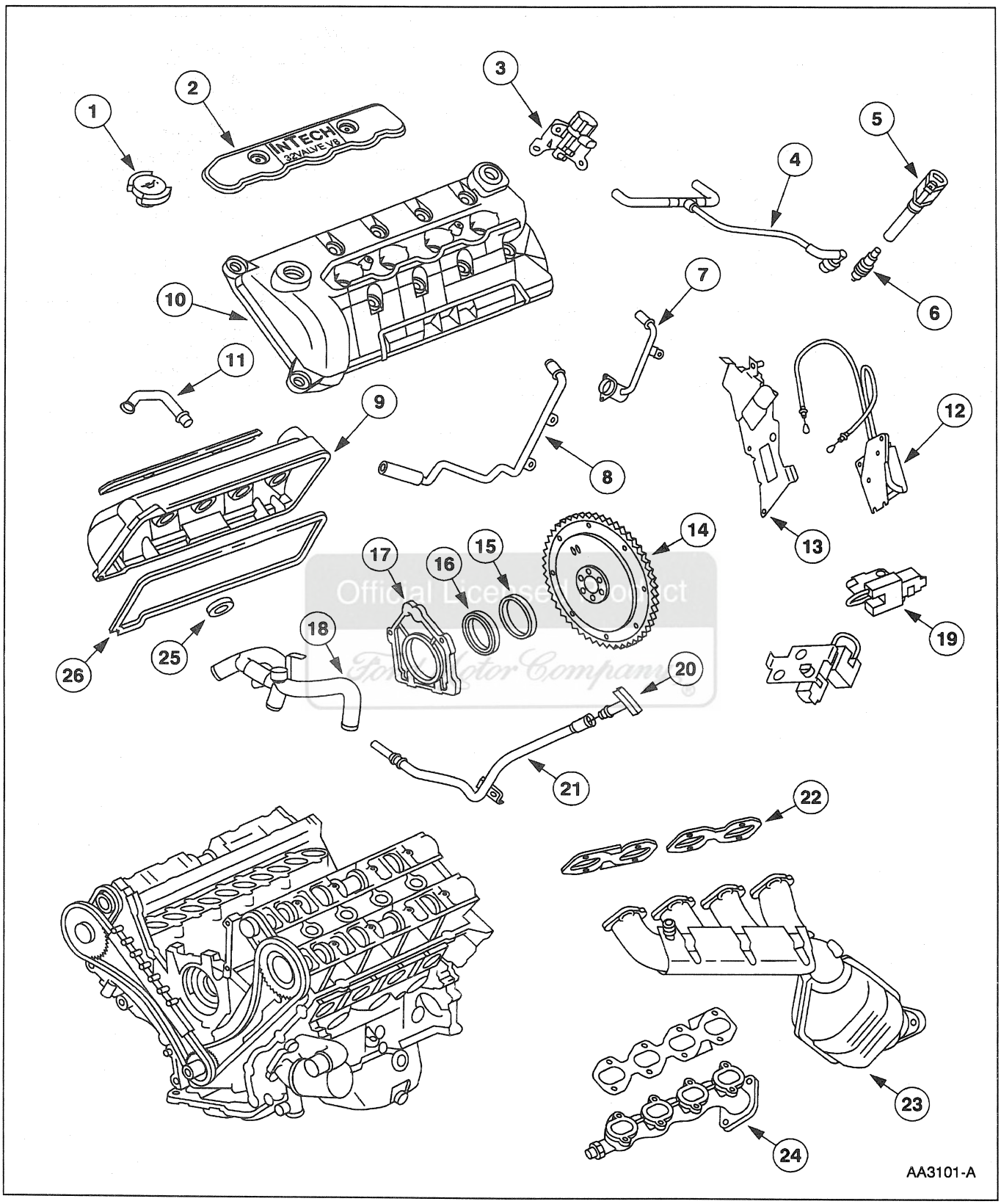

Official Licensed Product
Ford Motor Company

DESCRIPTION AND OPERATION (Continued)

Item	Part Number	Description
1	6766	Oil Filler Cap
2	6P067	Ignition Coil Cover
3	9S429	EGR Vacuum Regulator Control and Bracket Assembly
4	6853	Crankcase Ventilation Hose
5	12A366	Ignition Coil Assembly
6	12405	Spark Plug
7	18472	Heater Water Hose
8	18472	Heater Water Hose
9	6582	Valve Cover
10	6582	Valve Cover
11	6758	Crankcase Ventilation Tube
12	9J559	IMRC Actuator
13	9J434	Delta PFE and Bracket Assembly

(Continued)

Item	Part Number	Description
14	6375	Flywheel
15	6310	Crankshaft Oil Slinger
16	6701	Crankshaft Rear Oil Seal
17	6K301	Crankshaft Rear Oil Seal and Retainer
18	8548	Water Bypass Tube
19	18801	Radio Ignition Interference Capacitor
20	6750	Oil Level Dipstick
21	6754	Oil Level Indicator Tube
22	9448	Exhaust Manifold Gasket
23	5G232	Manifold Assembly
24	9430	Exhaust Manifold
25	6C527	Seal-Valve Cover (8 Req'd)
26	6584 (LH) 6A559 (RH)	Valve Cover Gasket

Official Licensed Product
Ford Motor Company

DESCRIPTION AND OPERATION (Continued)

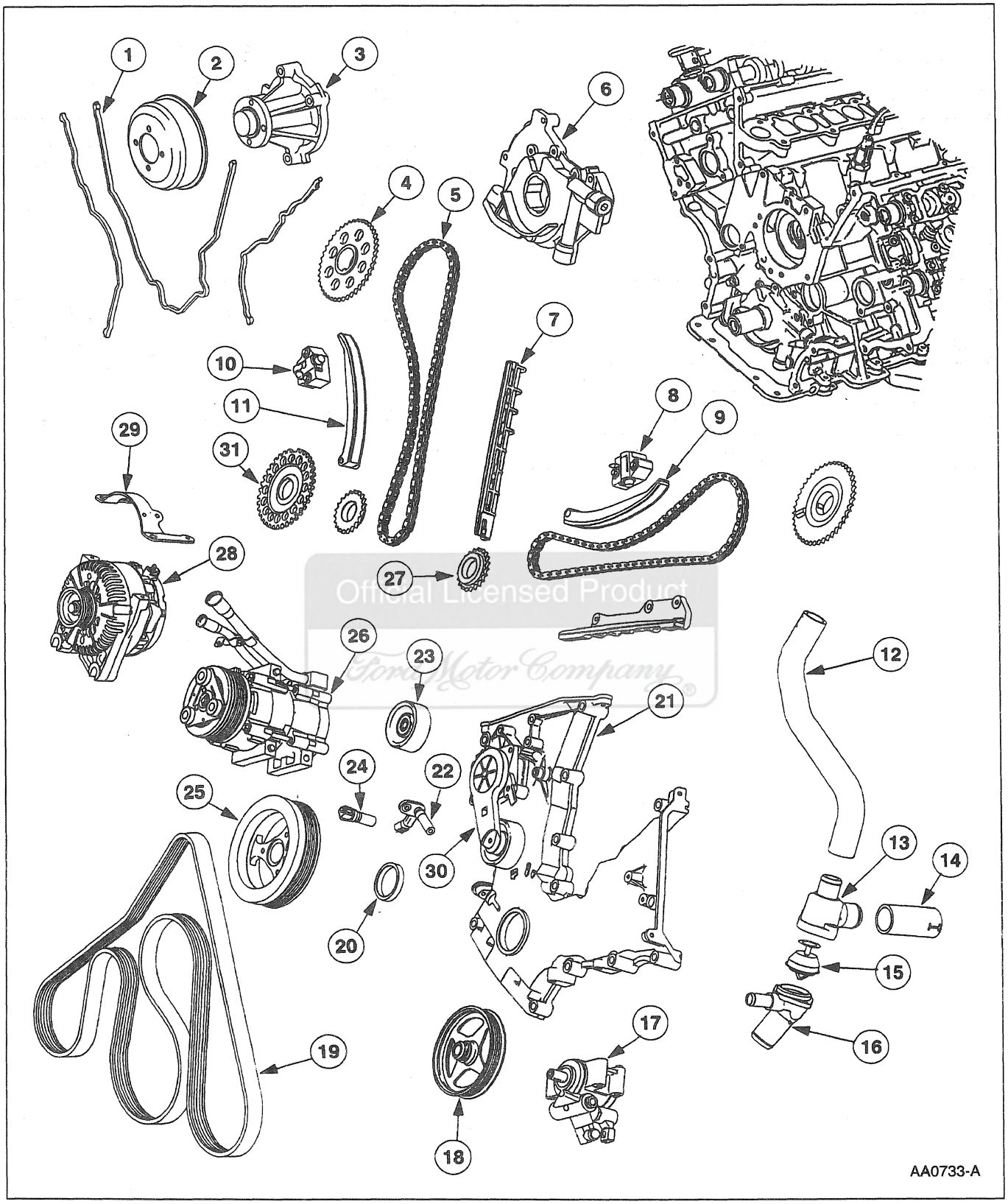

Official Licensed Product
Ford Motor Company

DESCRIPTION AND OPERATION (Continued)

Item	Part Number	Description
1	6020	Engine Front Cover Gasket
2	8509	Water Pump Pulley
3	8501	Water Pump
4	6256	Camshaft Sprocket
5	6268	Timing Chain/Belt
6	6600	Oil Pump
7	6K297	Timing Chain Guide
8	6M269	Tensioner, LH
9	6L253	Timing Chain Tensioner Arm, LH
10	6L266	Timing Chain Tensioner , RH
11	6L253	Timing Chain Tensioner Arm, RH
12	8A593	Water Bypass Tube to Thermostat Housing Hose
13	8592	Water Hose Connection
14	8A595	Upper Thermostat Housing to Oil Filter Adapter Hose

(Continued)

Item	Part Number	Description
15	8575	Water Thermostat
16	18599	Hot Water Heater Elbow Connection
17	3A674	Power Steering Pump
18	3A733	Power Steering Pump Pulley
19	8620	Drive Belt
20	6700	Crankshaft Front Seal
21	6019	Engine Front Cover
22	6C315	Crankshaft Position Sensor
23	8678	Belt Idler Pulley
24	6B288	Camshaft Position Sensor
25	6316	Crankshaft Vibration Damper
26	19703	A/C Compressor
27	6306	Crankshaft Sprocket
28	10300	Generator
29	10153	Generator Mounting Bracket
30	6B209	Drive Belt Tensioner
31	—	Ignition Pulse Wheel

Official Licensed Product
Ford Motor Company

DESCRIPTION AND OPERATION (Continued)

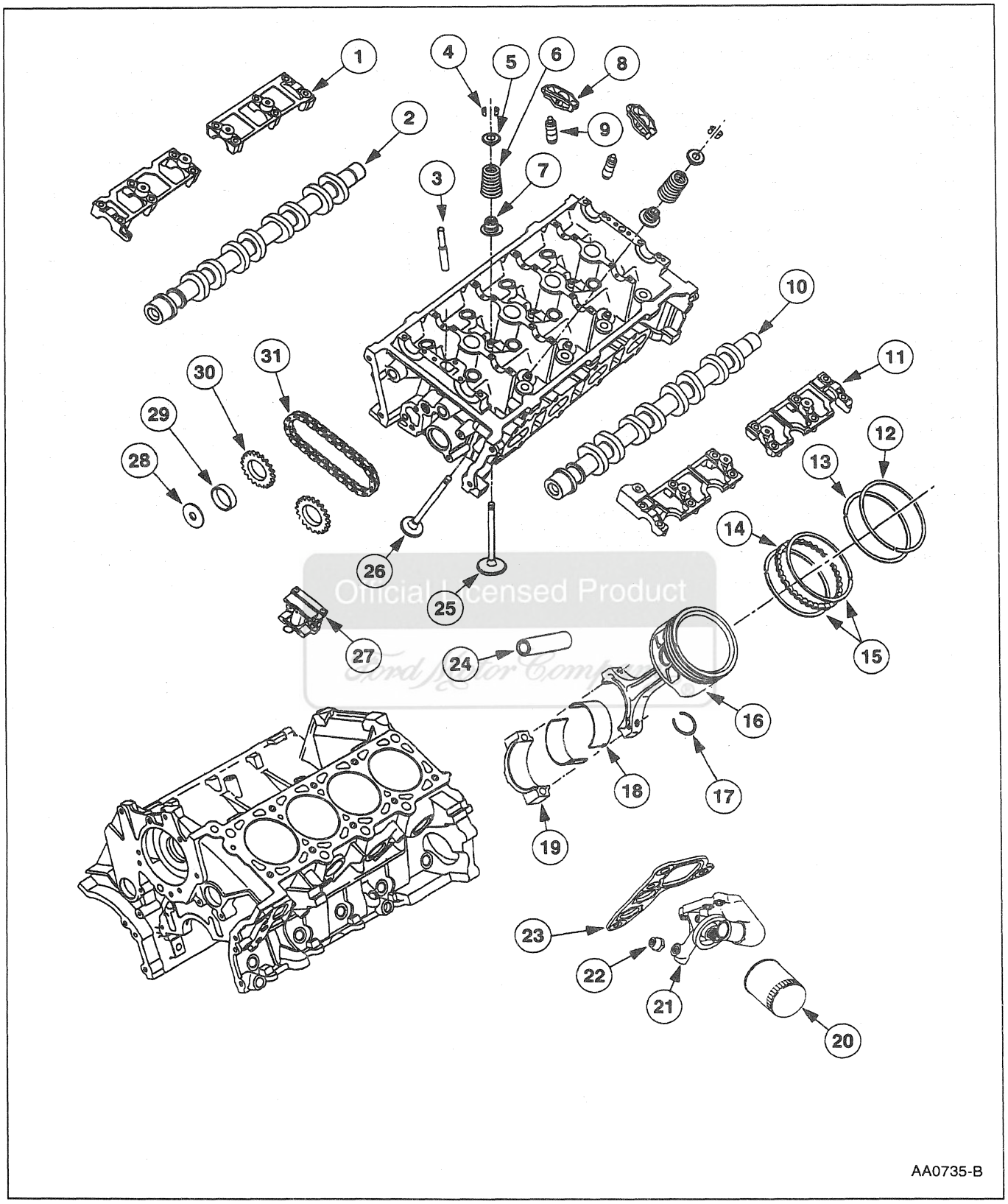

Official Licensed Product

DESCRIPTION AND OPERATION (Continued)

Item	Part Number	Description
1	6B277	Cap Assembly (Intake)
2	6250	Camshaft
3	6F087	Cylinder Head Oil Reservoir Restrictor
4	6518	Valve Spring Retainer Key
5	6514	Valve Spring Retainer
6	6513	Valve Spring
7	6571	Valve Stem Seal
8	6529	Roller Follower
9	6C501	Hydraulic Lash Adjuster
10	6250	Camshaft
11	6B278	Cap Assembly (Exhaust)
12	6150	Piston Ring—Upper Compression
13	6152	Piston Ring—Lower Compression
14	6161	Piston Ring—Oil Spacer
15	6159	Piston Ring—Oil Control Segment

(Continued)

Item	Part Number	Description
16	6100	Piston—Connecting Rod Assembly
17	6140	Piston Pin Retainer
18	6211	Connecting Rod Bearing
19	6200	Connecting Rod
20	6714	Oil Bypass Filter
21	6881	Oil Filter Adapter
22	9278	Oil Pressure Sensor
23	6840	Oil Filter Adapter Gasket
24	6135	Piston Pin
25	6507	Intake Valve
26	6505	Exhaust Valve
27	6C271	Tensioner—LH Secondary
28	N806164	Washer
29	6265	Camshaft Sprocket Spacer
30	6256	Camshaft Sprocket
31	6268	Timing Chain

Official Licensed Product
Ford Motor Company

DESCRIPTION AND OPERATION (Continued)

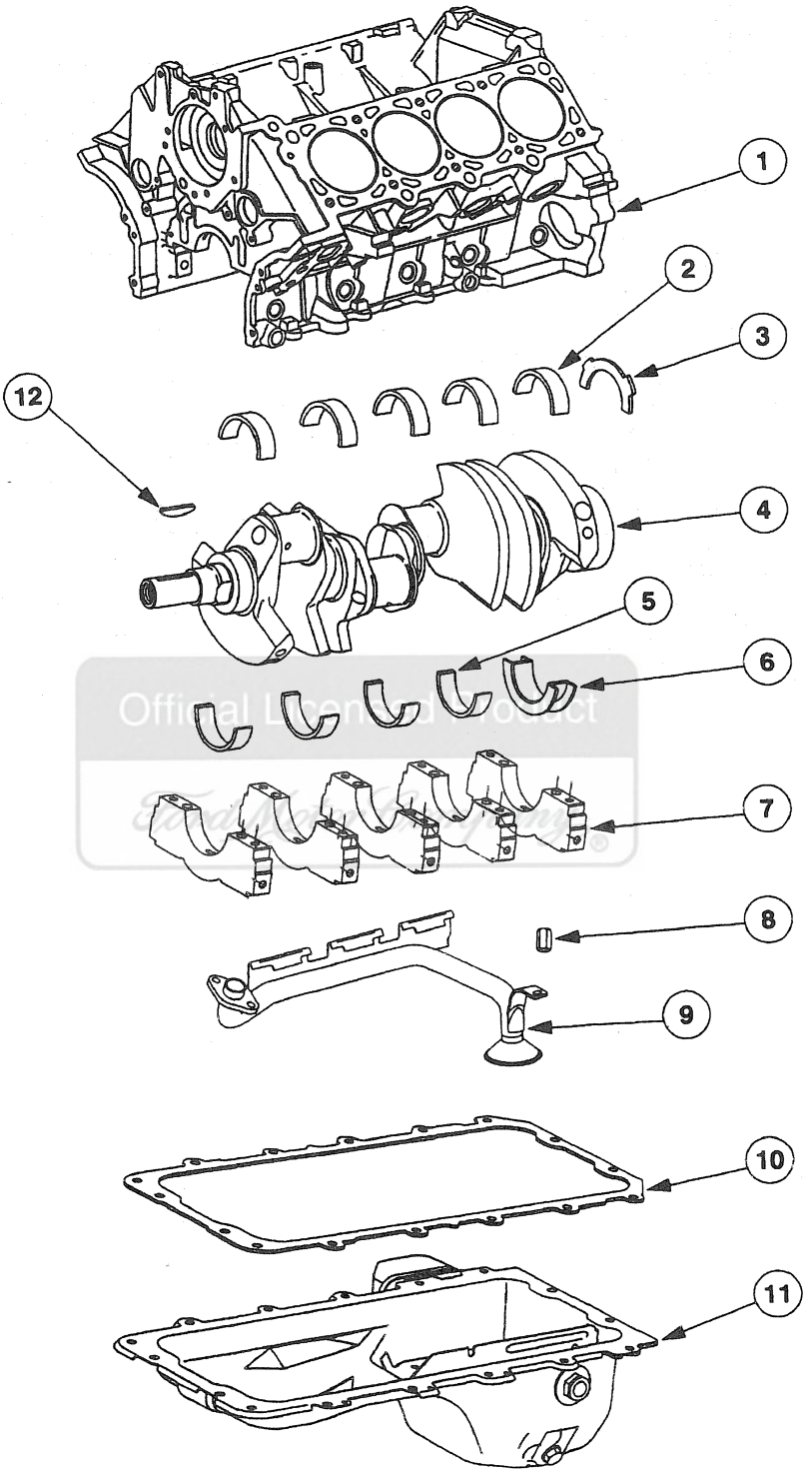

DESCRIPTION AND OPERATION (Continued)

Item	Part Number	Description
1	6010	Cylinder Block
2	6333	Crankshaft Main Bearing
3	6334	Crankshaft Thrust Washer
4	6303	Crankshaft
5	6333	Crankshaft Main Bearing
6	6337	Crankshaft Thrust Main Bearing

(Continued)

Item	Part Number	Description
7	6325	Main Bearing Cap
8	N806180	Spacer
9	6622	Oil Pump Screen Cover and Tube
10	6710	Oil Pan Gasket
11	6675	Oil Pan
12	N806201	Crankshaft Key

DIAGNOSIS AND TESTING

Engine

Special Tool(s)

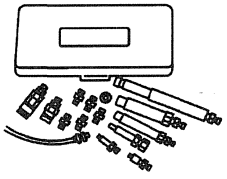 ST1691-A	Engine Cylinder Air Pressurization Kit 303-F011 (014-00707) or equivalent
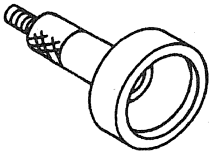 ST1272-A	Cup Shaped Adapter 303-007 (TOOL-6565-AB) or equivalent
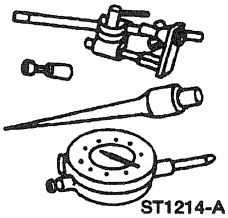 ST1214-A	Dial Indicator With Bracketry 100-002 (TOOL-4201-C) or equivalent
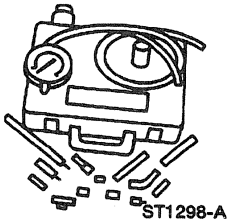 ST1298-A	Engine Cylinder Leak Detection/Air Pressurization Kit 303-F012 (014-00708) or equivalent

(Continued)

Special Tool(s)

ST1296-A	Engine Oil Pressure Gauge 303-088 (T73L-6600-A)
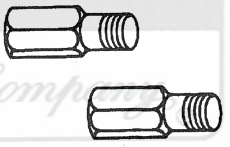 ST1295-A	Transmission Test Adapter 307-D003 (D87C-77000-A) or equivalent
ST1704-A	Fluorescent Tracer Dye 164-R3705 or equivalent

(Continued)

Official Licensed Product Ford Motor Company

DIAGNOSIS AND TESTING (Continued)

Special Tool(s)

ST1300-A	12 Volt Master UV Diagnostic Inspection Kit 164-R0756 or equivalent
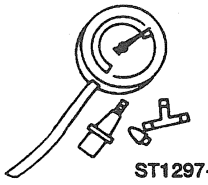 ST1297-A	Vacuum/Pressure Tester 164-R0253 or equivalent

Inspection and Verification

1. Verify the customer's concern by operating the engine to duplicate the condition.
2. Visually inspect for obvious signs of mechanical damage; refer to the following chart.

Visual Inspection Chart

Mechanical
• Engine coolant leaks • Engine oil leaks • Fuel leaks • Loose mounting bolts, studs and nuts

3. If inspection reveals obvious concerns that can be readily identified, repair as required.
4. If the concerns remain after the inspection, determine the symptoms and go to the Symptom Chart.

Symptom Chart

SYMPTOM CHART

Condition	Possible Source	Action
• Difficult Starting	• Damaged starting system.	• REFER to Section 303-06.
	• Damaged charging system/ battery.	• REFER to Section 414-00.
	• Burned out valve.	• REPLACE valve and INSPECT seat.
	• Worn piston.	• REPLACE piston.
	• Worn piston ring(s).	• REPLACE piston ring(s).
	• Worn cylinder.	• REPAIR or REPLACE cylinder block.
	• Damaged cylinder head gasket.	• REPLACE cylinder head gasket.
	• Damaged fuel system.	• REFER to the Powertrain Control/Emissions Diagnosis Manual [2].
	• Damaged ignition system.	• REFER to the Powertrain Control/Emissions Diagnosis Manual [2].

Official Published Product Ford Motor Company

2 Can be purchased as a separate item.

DIAGNOSIS AND TESTING (Continued)

SYMPTOM CHART (Continued)

Condition	Possible Source	Action
• Poor Idling	• Damaged roller follower • Improper valve-to-valve seat contact. • Damaged cylinder head gasket. • Damaged fuel system. • Damaged ignition system. • Leaking intake manifold gasket. • IMRC units open at idle. • Damaged fuel charging wiring. • Damaged EGR valve.	• REPLACE roller follower. • REPLACE valve and/or valve seat. • REPLACE cylinder head gasket. • REFER to the Powertrain Control/Emissions Diagnosis Manual [3]. • REFER to the Powertrain Control/Emissions Diagnosis Manual [3]. • REPLACE intake manifold gasket. • REPAIR or REPLACE IMRC units and/or actuator. • REPAIR or REPLACE fuel charging wiring. • REPAIR or REPLACE EGR valve.
• Abnormal Combustion	• Damaged roller follower. • Burned out or sticking valve. • Weak or broken valve spring. • Carbon accumulation in combustion chamber. • Damaged fuel system. • IMRC units open at idle. • Damaged ignition system. • Leaking intake manifold gasket.	• REPLACE roller follower. • REPAIR or REPLACE valve. • REPLACE valve spring. • ELIMINATE carbon build-up. • REFER to the Powertrain Control/Emissions Diagnosis Manual [3]. • REPAIR or REPLACE IMRC units and/or actuator. • REFER to the Powertrain Control/Emissions Diagnosis Manual [3]. • REPLACE intake manifold gasket.
• Excessive Oil Consumption	• Worn piston ring groove. • Sticking piston ring(s). • Worn piston or cylinder. • Worn valve stem seal. • Worn valve stem or valve guide. • Leaking oil. • Plugged or restricted air intake system.	• REPLACE piston. • REPAIR or REPLACE piston ring(s). • REPAIR or REPLACE piston or cylinder block. • REPLACE valve stem seal. • REPLACE valve stem and guide. • REPAIR oil leakage. • REPAIR or REPLACE intake air system components as required.

Official Licensed Product Ford Motor Company

3 Can be purchased as a separate item.

DIAGNOSIS AND TESTING (Continued)

SYMPTOM CHART (Continued)

Condition	Possible Source	Action
• Engine Noise	• Excessive main bearing oil clearance.	• REPLACE crankshaft main bearing.
	• Seized or heat-damaged crankshaft main bearing.	• REPLACE crankshaft main bearing and/or crankshaft.
	• Excessive crankshaft end play.	• REPLACE crankshaft thrust washer, crankshaft thrust main bearing and/or crankshaft.
	• Excessive connecting rod bearing oil clearance.	• REPLACE connecting rod bearing, connecting rod and/or crankshaft.
	• Heat-damaged connecting rod bearing.	• REPLACE connecting rod bearing and/or crankshaft.
	• Damaged connecting rod bushing.	• REPLACE connecting rod and/or piston pin.
	• Worn cylinder.	• REPAIR or REPLACE cylinder block.
	• Worn piston or piston pin.	• REPLACE piston and/or piston pin.
	• Damaged piston ring(s).	• REPLACE piston ring(s).
	• Bent connecting rod.	• REPLACE connecting rod.
	• Damaged hydraulic lash adjuster.	• REPLACE hydraulic lash adjuster.
	• Excessive roller follower clearance.	• REPLACE roller followers and/or hydraulic lash adjuster.
	• Broken valve spring.	• REPLACE valve spring.
	• Excessive valve guide clearance.	• REPLACE valve.
	• Damaged cooling system.	• REFER to Section 303-03.
	• Damaged fuel system.	• REFER to the Powertrain Control/Emissions Diagnosis Manual [4].
	• Leaking exhaust system.	• REFER to Section 309-00.
	• Improper drive belt tension.	• REFER to Section 303-05.
	• Damaged generator bearing.	• REFER to Section 414-02.
	• Loose timing chain.	• REPLACE timing chain or tensioner.
	• Damaged timing chain tensioner.	• REPLACE timing chain tensioner.
	• Damaged water pump bearing.	• REFER to Section 303-03.
	• Damaged exhaust gas recirculation (EGR) system.	• REFER to the Powertrain Control/Emissions Diagnosis Manual [4].

Ford Motor Company Offered Licensed Product

4 Can be purchased as a separate item.

DIAGNOSIS AND TESTING (Continued)

SYMPTOM CHART (Continued)

Condition	Possible Source	Action
• Insufficient Power	• Damaged roller follower.	• REPLACE roller follower.
	• Compression leakage at valve seat.	• REPAIR or REPLACE valve, valve seat and/or cylinder head.
	• Seized valve stem.	• REPLACE valve stem.
	• Weak or broken valve spring.	• REPLACE valve spring.
	• Damaged cylinder head gasket.	• REPLACE cylinder head gasket.
	• Cracked or distorted cylinder head.	• REPLACE cylinder head.
	• Damaged, worn or sticking piston ring(s).	• REPAIR or REPLACE piston ring(s).
	• Worn or damaged piston.	• REPLACE piston.
	• Damaged fuel system.	• REPAIR or REPLACE IMRC units.
	• Damaged IMRC units and/or actuator.	• REFER to the Powertrain Control/Emissions Diagnosis Manual [5].
	• Damaged ignition system.	• REFER to the Powertrain Control/Emissions Diagnosis Manual [5].
	• Slipping transmission.	• REFER to Section 307-01.
	• Dragging brakes.	• REFER to Section 206-00.
	• Incorrect tire size.	• REFER to Section 204-04.
	• Restricted exhaust system.	• REFER to Section 309-00.

Component Tests

Engine Oil Leaks

When diagnosing engine oil leaks, the source and location of the leak must be identified prior to service.

Fluorescent Oil Additive Method

1. Add Rotunda Gas Engine Dye 164-R3705 or equivalent to the engine oil. Use 29.6 ml (1 ounce) of the fluorescent additive in all engines.
2. Clean the engine with a suitable solvent to remove all traces of oil.
3. Run the engine for 15 minutes.
4. Stop engine and inspect all seal gasket and galley plug areas for leaks using Rotunda 12 Volt Master UV Diagnostic Kit 164-R0756 or equivalent. A clear bright yellow or orange area will identify leak. For extremely small leaks, several hours may be required for the leak to appear.
5. **NOTE:** For minor gasket leaks tightening the retaining bolts may resolve the problem.

   Service all leaks as required.

Leakage Points—Underhood

Examine the following areas for oil leakage:

- Valve cover gasket (6584)
- Crankcase ventilation grommet (6A892)
- head gasket
- oil bypass filter (6714)
- oil filter adapter gasket (6840)
- oil level indicator tube (6754) (dipstick) connection
- oil pressure sensor (9278)

Leakage Points—Under Engine, With Vehicle on Hoist

- Oil pan gaskets (6710)
- Engine front cover gasket
- Crankshaft front seal (6700)
- Crankshaft rear oil seal (6701)
- Crankshaft main bearing cap side bolts

5 Can be purchased as a separate item.

DIAGNOSIS AND TESTING (Continued)

With Transmission and Flywheel Removed

NOTE: Air leakage in area around a crankshaft rear oil seal does not necessarily indicate a crankshaft rear oil seal leak. However, if no other cause can be found for oil leakage, assume that the crankshaft rear oil seal is the cause of the oil leak.

NOTE: Light foaming equally around valve cover bolts and crankshaft seals is not detrimental; no repairs are required.

- Crankshaft rear oil seal
- Flywheel mounting bolt holes (with flywheel (6375) installed)
- Pipe plugs at the end of oil passages

Oil leaks at the crimped seams in the sheet metal parts and cracks in the cast or stamped parts can be detected when pressurizing the crankcase.

Cylinder Leakage Detection

When a cylinder produces a low reading, the use of Engine Cylinder Leak Detection/Air Pressurization Kit will be helpful in pinpointing the exact cause.

The leakage detector is inserted in the spark plug hole, the piston is brought up to top dead center on the compression stroke and compressed air is admitted.

Once the combustion chamber is pressurized, a special gauge included in the kit will read the percentage of leakage. Leakage exceeding 20 percent is excessive.

While the air pressure is retained in the cylinder, listen for the hiss of escaping air. A leak at the intake valve (6507) will be heard in the throttle body (9E926). A leak at the exhaust valve (6505) can be heard at the tail pipe. Leakage past the piston rings will be audible at the positive crankcase ventilation (PCV) connection. If air is passing through a blown head gasket to an adjacent cylinder, the noise will be evident at the spark plug hole of the cylinder into which the air is leaking. Cracks in the cylinder block or gasket leakage into the cooling system may be detected by a stream of bubbles in the radiator (8005).

Oil Leak and Valve Stem Seal Test

The cylinder leakage detector tests for engine oil leaks and checks the valve stem seals for leakage.

1. Plug all the crankcase openings except the one used for connecting the leakage detector.
2. Connect the Engine Cylinder Leak Detection/Air Pressurization Kit to a crankcase opening (an oil level indicator tube is convenient). Adjust the air pressure to approximately 34 kPa (5 psi).
3. Using a solution of liquid soap and water, brush the solution along the gasket sealing surfaces and bearing seals. Look for bubbles or foam.
4. Remove the spark plug (12405) and rotate the crankshaft slowly with a wrench. Check for large amounts of air escaping into the cylinders as each intake valve and exhaust valve opens.
5. The spark plugs on the leaking cylinders will probably show deposits of burned oil.

Intake Manifold Vacuum Test

Bring the engine to normal operating temperature. Connect Vacuum/Pressure Tester to the intake manifold (9424). Run the engine at the specified idle speed.

The vacuum gauge should read between 51-74 kPa (15-22 in-Hg) depending upon the engine condition and the altitude at which the test is performed. Subtract 4.0193 kPa (1 in-Hg) from the specified reading for every 304.8m (1,000 feet) of elevation above sea level.

The reading should be steady. If necessary, adjust the gauge damper control (where used) if the needle is fluttering rapidly. Adjust damper until needle moves easily without excessive flutter.

Interpreting Vacuum Gauge Readings

A careful study of the vacuum gauge reading while the engine is idling will help pinpoint trouble areas. Always conduct other appropriate tests before arriving at a final diagnostic decision. Vacuum gauge readings, although helpful, must be interpreted carefully.

Most vacuum gauges have a normal band indicated on the gauge face.

DIAGNOSIS AND TESTING (Continued)

The following are potential gauge readings. Some are normal; others should be investigated further.

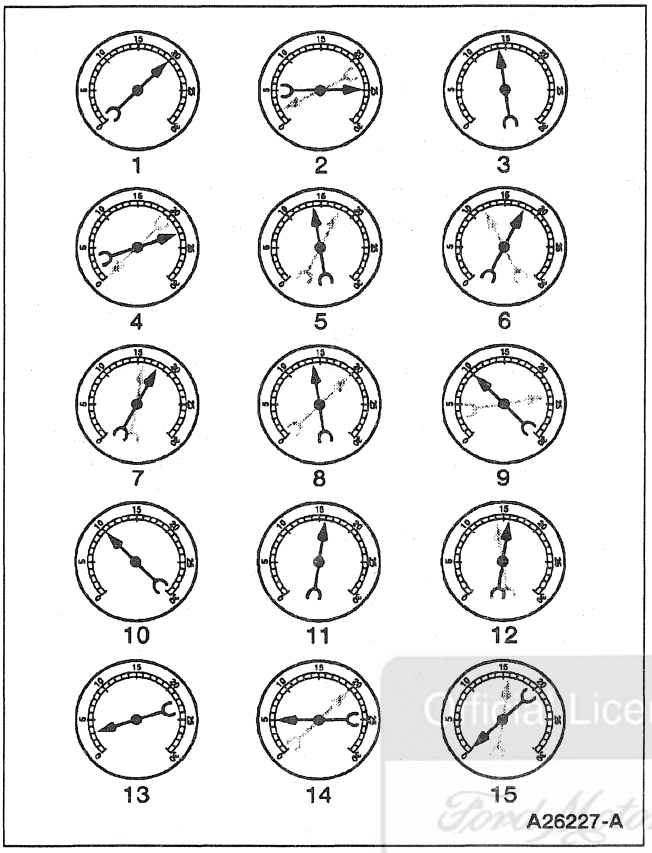

1. NORMAL READING: The needle is between 51-74 kPa (15-22 in-Hg) and holding steady.
2. NORMAL READING DURING RAPID ACCELERATION AND DECELERATION: When engine is rapidly accelerated (dotted needle), the needle will drop to a low (not to zero) reading. When the throttle is suddenly released, the needle will snap back up to a higher than normal figure.
3. NORMAL FOR HIGH-LIFT CAMSHAFT WITH LARGE OVERLAP: The needle will register as low as 51 kPa (15 in-Hg) but will be relatively steady. Some oscillation is normal.
4. WORN RINGS OR DILUTED OIL: When the engine is accelerated (dotted needle), the needle drops to 0 kPa (0 in-Hg). Upon deceleration, the needle runs slightly above 74 kPa (22 in-Hg).
5. STICKING VALVES: When the needle (dotted) remains steady at a normal vacuum but occasionally flicks (sharp, fast movement) down and back about 13 kPa (4 in-Hg), one or more valves may be sticking.
6. BURNED OR WARPED VALVES: A regular, evenly-spaced, downscale flicking of the needle indicates one or more burned or warped valves. Hydraulic lash adjuster (HLA) clearance will also cause this reaction.
7. POOR VALVE SEATING: A small but regular downscale flicking can mean one or more valves are not seating.
8. WORN VALVE GUIDES: When the needle oscillates over a 13 kPa (4 in-Hg) range (approximately) at idle speed, the valve guides could be worn. As engine speed increases, needle will become steady if guides are responsible.
9. WEAK VALVE SPRINGS: When the needle oscillation becomes more violent as engine rpm is increased, weak valve springs are indicated. The reading at idle could be relatively steady.
10. LATE VALVE TIMING: A steady but low reading could be caused by late valve timing.
11. IGNITION TIMING RETARDING: Retarded ignition timing will produce a steady but somewhat low reading.
12. INSUFFICIENT SPARK PLUG GAP: When the spark plugs are insufficient gap, a regular, small pulsation of the needle can occur.
13. INTAKE LEAK: A low, steady reading which can be caused by an intake manifold or throttle body gasket leak.
14. BLOWN HEAD GASKET: A regular drop of fair magnitude can be caused by a blown head gasket or warped cylinder head-to-cylinder block surface.
15. RESTRICTED EXHAUST SYSTEM: When the engine is first started and is idled, the reading may be normal, but as the engine rpm is increased, the back pressure caused by a clogged muffler, kinked tail pipe or other concerns which will cause the needle to slowly drop to 0 kPa (0 in-Hg). The needle then may slowly rise. Excessive exhaust clogging will cause the needle to drop to a low point even if the engine is only idling.

When vacuum leaks are indicated, search out and correct the cause. Excess air leaking into the system will upset the fuel mixture and cause concerns such as rough idle, missing on acceleration or burned valves. If the leak exists in an accessory unit such as the power brake booster (2005), the unit will not function correctly. Always fix any vacuum leaks.

Original Licensed Product
Ford Motor Company

DIAGNOSIS AND TESTING (Continued)

Excessive Engine Oil Consumption

The amount of oil an engine uses will vary with the way the vehicle is driven in addition to normal engine-to-engine variation. This is especially true during the first 16,100 km (10,000 miles) when a new engine is being broken in or until certain internal engine components become conditioned. Vehicles used in heavy-duty operation may use more oil. The following are examples of heavy-duty operation:

- trailer towing applications
- severe loading applications
- sustained high speed operation

Engines need oil to lubricate all internal components, including:

- cylinder block cylinder walls
- pistons and piston rings
- intake and exhaust valve stems
- intake and exhaust valve guides

When the pistons move downward, a thin film of oil is left on the cylinder walls. As the vehicle is operated, some oil is also drawn into the combustion chambers past the intake and exhaust valve stem seals and burned.

The following is a partial list of conditions that can affect oil consumption rates:

- engine size
- operator driving habits
- ambient temperature
- quality and viscosity of the oil

Operation under varying conditions can frequently be misleading. A vehicle that has been run for several thousand miles on short trips or in below-freezing ambient temperatures may have consumed a ''normal'' amount of oil. However, when checking the engine oil level, it may measure up to the MAX mark on the oil level dipstick (6750) due to dilution (condensation and fuel) in the engine crankcase. The vehicle then might be driven at high speeds on the highway where the condensation and fuel boil off. The next time the engine oil is checked, it may appear that a liter (quart) of oil was used in about 160 km (100 miles). This perceived 160 km (100 miles) per liter (quart) oil consumption rate causes customer concern even though the actual overall oil consumption rate is about 2400 km (1500 miles) per liter (quart).

Make sure the selected engine oil meets Ford specification WSS-M2C153-G and the recommended API performance category ''SJ'' and SAE viscosity grade as shown in the vehicle Owner Guide. It is also important that the engine oil is changed at the intervals specified for the typical operating conditions.

Oil Consumption Test

The following diagnostic procedure is used to determine the source of excessive internal oil consumption.

1. **NOTE:** Oil use is normally greater during the first 16,100 km (10,000 miles) of repair. As the mileage increases, the oil use generally decreases. Vehicles in normal repair should get at least 1,450 km (900 miles) per liter (quart) after 16,100 km (10,000 miles) of repair. High speed driving, towing, high ambient temperature and other factors may result in greater oil use.

   Define excessive oil consumption, such as the number of miles driven per liter (quart) of oil used. Also determine customer's driving habits, such as sustained high speed operation, towing, extended idle and other considerations.
2. Verify that the engine has no external oil leak; refer to Engine Oil Leaks in this section.
3. Verify that the engine has the correct oil level dipstick.
4. Verify that the engine is not being run in an overfilled condition. Check the oil level at least five minutes after a hot shutdown with the vehicle parked on a level surface. In no case should the level be above MAX. If significantly overfilled, perform Steps 5a through 5d.
5. Perform an oil consumption test:
   a. Drain engine oil, remove oil bypass filter and refill with one liter (quart) less than the recommended amount.
   b. Run the engine for three minutes (10 minutes if cold), and allow the oil to drain back for at least five minutes with the vehicle on a level surface.

Ford Motor Company Licensed Product

DIAGNOSIS AND TESTING (Continued)

c. Remove the oil level dipstick and wipe clean. (Do not wipe with anything contaminated with silicone compounds.) Reinstall oil level dipstick being sure to seat the oil level dipstick firmly in the oil level indicator tube. Remove the oil level dipstick and draw a mark on the back (unmarked) surface at the indicated oil level. (This level should be about the same as the MIN mark on the face of the oil level dipstick.)

d. Add one liter (quart) of oil. Restart the engine and allow to idle for at least two minutes. Shut off the engine and allow the oil to drain back for at least five minutes. Mark the oil level dipstick, using the procedure above. (This level may range slightly below the MAX mark).

e. Record the vehicle's mileage.

f. Instruct the customer to drive the vehicle as usual and:

- Check the oil level regularly at intervals of 160 to 240 km (100-150 miles).
- Return to the service point when the oil level drops below the lower (MIN) mark on the oil level dipstick.
- Add only full liters (quarts) of the same oil in an emergency. Note the mileage at which the oil is added.

g. Check the oil level under the same conditions and at the same location as in Steps c and d.

- Measure the distance from the oil level to the MAX mark on the oil level dipstick and record.
- Measure the distance between the two scribe marks and record.
- Divide the first measurement by the second.
- Divide the distance driven during the oil test by the result. This quantity is the approximate oil consumption rate in kilometers per liter or in miles per quart.

h. If the oil consumption rate is unacceptable, go to Step 6.

6. Check the positive crankcase ventilation (PCV) system. Make sure the system is not plugged.
7. Check for plugged oil drain-back holes in the cylinder heads and the cylinder block.
8. If the condition still exists after performing the above tests, go to Step 9.
9. Perform a cylinder compression test and/or perform a cylinder leak detection test with Engine Cylinder Leak Detection/Air Pressurization Kit. This can help determine the source of the oil consumption such as: valves, piston rings or other areas.
10. **NOTE:** After determining if the worn parts should be replaced, make sure correct replacement parts are used.

    Check valve guides for excessive guide clearance. REPLACE all the valve stem seals after verifying the valve guide clearance.
11. Worn or damaged internal engine components can cause excessive oil consumption. Small deposits of oil on the tip of spark plugs can be a clue to internal oil consumption. If internal oil consumption still persists, proceed as follows:

    a. Remove the engine from the vehicle and place it on an engine work stand. Remove the intake manifolds, cylinder heads, oil pan (6675) and oil pump (6600).

    b. Check the piston ring clearance, ring gap and ring orientation. Repair as required.

    c. Check for excessive bearing clearance. Repair as required.
12. Perform an oil consumption test; refer to Oil Consumption Test, to confirm oil consumption concern has been resolved.

Oil Pressure Test

1. Disconnect and remove the oil pressure sensor from the engine.
2. Connect Engine Oil Pressure Gauge and Transmission Test Adapter to the oil pressure sender oil galley port.
3. Run the engine until normal operating temperature is reached.
4. Run the engine at 3000 rpm and record the gauge reading.
5. The oil pressure should be within specifications; refer to specifications in this section.
6. If the pressure is not within specification, check the following possible sources:

- insufficient oil

Ford Motor Company Official Licensed Product

DIAGNOSIS AND TESTING (Continued)

- oil leakage
- worn or damaged oil pump
- oil pump screen cover and oil pump screen cover and tube (6622)
- excessive main bearing clearance
- excessive connecting rod bearing clearance

Valves and Cylinder Head

- Check for plugged oil drain back holes.
- Check for missing or damaged valve stem seals.
- Check for a plugged oil metering orifice in the cylinder head oil reservoir.

If insufficient oiling is suspected, check the oil passages for blockage, then accelerate the engine to 1200 rpm with the transmission in NEUTRAL and the engine at normal operating temperature. Oil should spurt from the roller followers oil holes so that the valve tips and the camshaft roller followers are well oiled. With the valve covers off, some oil splash may overshoot the camshaft roller followers.

Camshaft Lobe Lift

Check the lift of each camshaft lobe in consecutive order and make a note of the readings.

1. Remove the valve covers.
2. Remove the spark plugs.
3. Install Dial Indicator with Bracketry so that the rounded tip of indicator is on top of the camshaft lobe and on the same plane as the hydraulic lash adjuster (HLA).
4. Rotate the crankshaft using a breaker bar and socket attached to the crankshaft pulley retainer bolt. Rotate the crankshaft until base circle of camshaft lobe is reached.

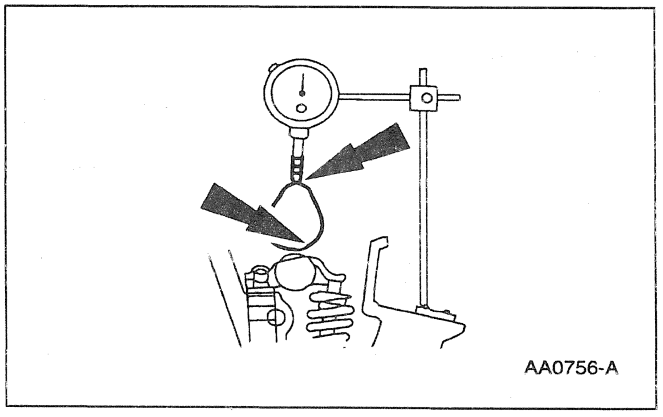

5. Zero the dial indicator. Continue to rotate the crankshaft until the high-lift point of camshaft lobe is in fully-raised position (highest indicator reading).
6. To check accuracy of original indicator reading, continue to rotate crankshaft until base circle is reached. The indicator reading should be zero. If zero reading is not obtained, repeat Steps 1 through 6.
7. NOTE: If lift on any lobe is below specified service limits, the roller follower operating on that camshaft (6250) must be replaced; refer to Camshaft Lobe Lift and Hydraulic Lash Adjusters in this section.

   Compare total lift recorded on indicator with specifications in this section.
8. Remove Dial Indicator with Bracketry.
9. Install spark plugs.
10. Install valve covers; refer to Valve Cover—RH and Valve Cover—LH in this section.

Official Licensed Product
Ford Motor Company

Valve Train Analysis—Static (Engine Off)

NOTE: Refer to Valve Cover—LH or Valve Cover—RH in this section for the removal and installation of the valve covers (6582).

Check for damaged and/or severely worn parts and correct assembly. Make sure correct parts are used with the static engine analysis as follows.

Camshaft Roller Followers and Hydraulic Lash Adjusters, Overhead Camshaft

- Check for loose mounting bolts on camshaft carriers.
- Check for plugged oil feed in the camshaft roller followers, hydraulic lash adjusters (HLA) or cylinder heads.

Camshaft—Overhead Camshaft Engines

- Check for broken or damaged parts.

Valve Springs

- Check for broken or damaged parts.

Valve Springs Retainer and Valve Spring Retainer Keys

- Check for proper seating of valve spring retainer key (6518) on valve stem and in valve spring retainer (6514).

DIAGNOSIS AND TESTING (Continued)

Valves and Cylinder Head

- Check the head gasket for proper installation.
- Check for plugged oil drain back holes.
- Check for worn or damaged valve tips.
- Check for missing or damaged guide-mounted valve stem seal.
- Check collapsed hydraulic lash adjuster gap.
- Check installed valve spring height.
- Check for missing or worn valve spring seats.
- Check for plugged oil metering orifice in cylinder head oil reservoir.

Static checks (engine off) are to be made on the engine prior to the dynamic procedure.

Valve Train Analysis—Dynamic

- Start the engine and, while idling, check for proper operation of all parts. Check the following:

Roller Follower

- Check for plugged oil hole in roller followers or cylinder head.
- Check for proper overhead valve train lubrication.

If insufficient oiling is suspected, accelerate the engine to 1200 rpm ± 100 rpm with the transmission in NEUTRAL and the engine at normal operating temperature. Oil should spurt from the roller followers oil holes such that the valve tips and roller followers are well oiled and/or, with the valve covers off, oil splash may overshoot the roller followers. If oiling is insufficient for this to occur, check the oil passages for blockage.

Hydraulic Lash Adjusters

Hydraulic lash adjuster noise may be caused by any of the following:

- excessive collapsed hydraulic lash adjuster gap
- sticking lash adjuster plunger
- lash adjuster check valve not functioning properly
- air in lubrication system
- leakdown rate too rapid
- excessive valve guide wear

An excessive collapsed lash adjuster gap may be caused by wear of the lash adjuster face, roller follower or valve tip. With lash adjuster collapsed, check gap between camshaft lobe and roller follower to determine if any other valve train parts are damaged, worn or out of adjustment.

A sticking lash adjuster plunger may be caused by dirt, chips or varnish inside the lash adjuster.

A lash adjuster check valve that is not functioning may be caused by an obstruction such as dirt or chips that prevent it from closing when the camshaft lobe is lifting the lash adjuster. It may also be caused by a broken check valve spring.

Air bubbles in the lubrication system will prevent the hydraulic lash adjusters from supporting the valve spring load and may be caused by too high or low of an oil level in the oil pan. Air bubbles may also be caused by air being drawn into the system through a hole, crack or leaking O-ring on the oil pump screen cover and tube.

If the leakdown time is below the specified time for used hydraulic lash adjusters, noisy operation may result. If no other cause for noisy hydraulic lash adjusters can be found, the leakdown rate should be checked and any hydraulic lash adjusters outside the specification should be replaced.

Assembled hydraulic lash adjusters can be tested with Hydraulic Tappet Leakdown Tester to check the leakdown rate. The leakdown rate specification is the time in seconds for the plunger to move a specified distance of its travel while under a 22.7 kg (50 lb) load. Test the hydraulic lash adjusters as follows:

Leakdown Testing

1. **NOTE:** Do not mix parts from different hydraulic lash adjusters. Parts are select-fit and are not interchangeable.

   Clean the hydraulic lash adjuster to remove all traces of engine oil.

Official Licensed Parts

DIAGNOSIS AND TESTING (Continued)

2. **NOTE:** The hydraulic lash adjuster cannot be checked with engine oil in them. Use only testing fluid.

   Place the hydraulic lash adjuster in the tester with the plunger facing upward. Pour the hydraulic tester fluid into the cup to a level that will cover the hydraulic lash adjuster. The fluid can be purchased from the tester's manufacturer. Using kerosene or any other fluid will not provide an accurate test.
3. Adjust the length of the ram so that the pointer is 1.59 mm (0.062 inch) below the starting mark when the ram contacts the tappet plunger to facilitate the timing as the pointer passes the Start Timing mark.

   Use the center mark on the pointer scale as the Stop Timing point instead of the original Stop Timing mark at the top of scale.
4. Work the lash adjusters plunger up and down until the hydraulic lash adjuster fills with fluid and all traces of air bubbles have disappeared.
5. Allow the ram and weight to force the hydraulic lash adjuster plunger downward. Measure the exact time it takes for the pointer to travel from the Start Timing to Stop Timing marks of the tester.
6. A satisfactory hydraulic lash adjuster must have a leakdown rate (time in seconds) within the specified minimum and maximum limits; refer to Specifications in this section.
7. If the hydraulic lash adjuster is not within the specification, replace it with a new hydraulic lash adjuster. Do not disassemble and clean new hydraulic lash adjuster before testing because the oil contained in the new hydraulic lash adjuster is test fluid.
8. Remove the fluid from the cup and bleed the fluid from the hydraulic lash adjuster by working the plunger up and down. This step will aid in depressing the lash adjuster plungers when checking the valve clearance.

Official Licensed Product
Ford Motor Company

IN-VEHICLE REPAIR

Valve Cover—LH

Removal

1. Remove the windshield wiper module assembly; refer to Section 501-16.

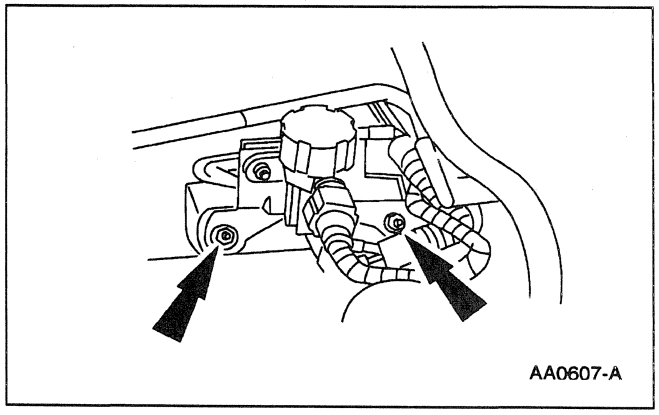

2. Remove the nuts and position the EGR vacuum regulator control out of the way.
3. Remove the accelerator and cruise control bracket; refer to Section 310-02.

IN-VEHICLE REPAIR (Continued)

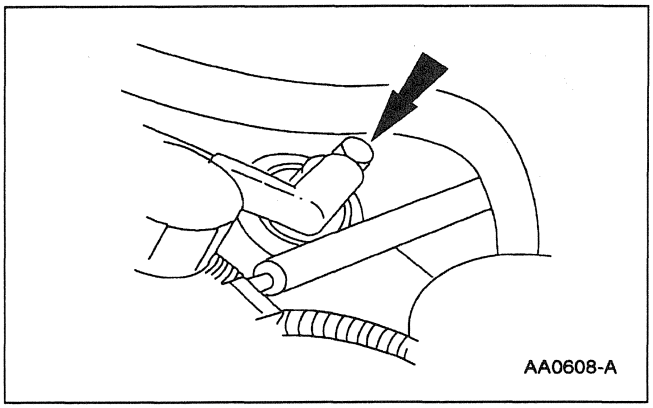

4. Remove the positive crankcase ventilation valve (PCV valve)(6A666) from the crankcase ventilation grommet and position aside.

5. Remove the ignition coils; refer to Section 303-07.

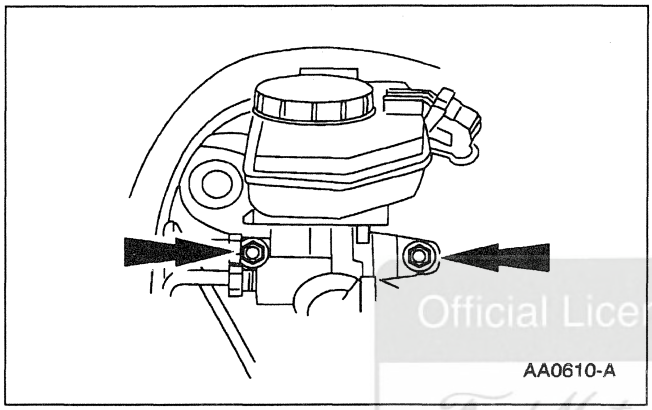

6. Remove the bolts and position the brake master cylinder (2140) aside.

Official Licensed Product
Ford Motor Company

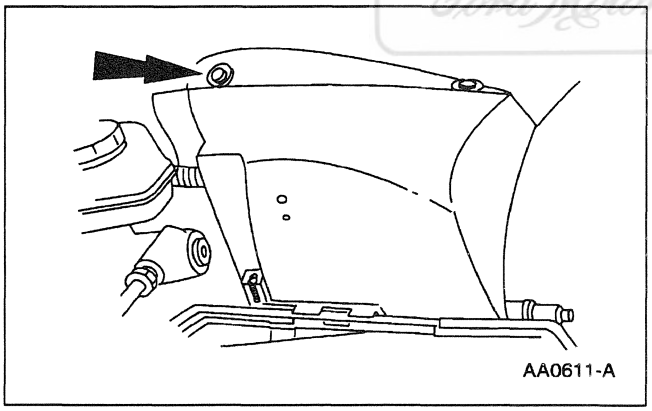

7. Remove the front shock absorber strut cover cup (18A179).

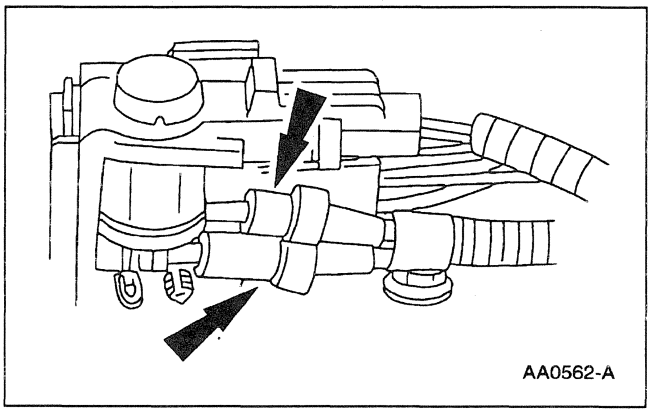

8. Disconnect the vacuum harness from the E.A.S. solenoid near the LH fender wall.

IN-VEHICLE REPAIR (Continued)

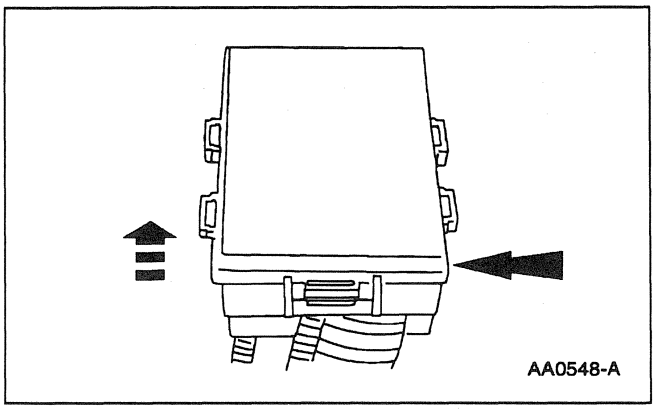

9. Position the power distribution box and bracket aside.

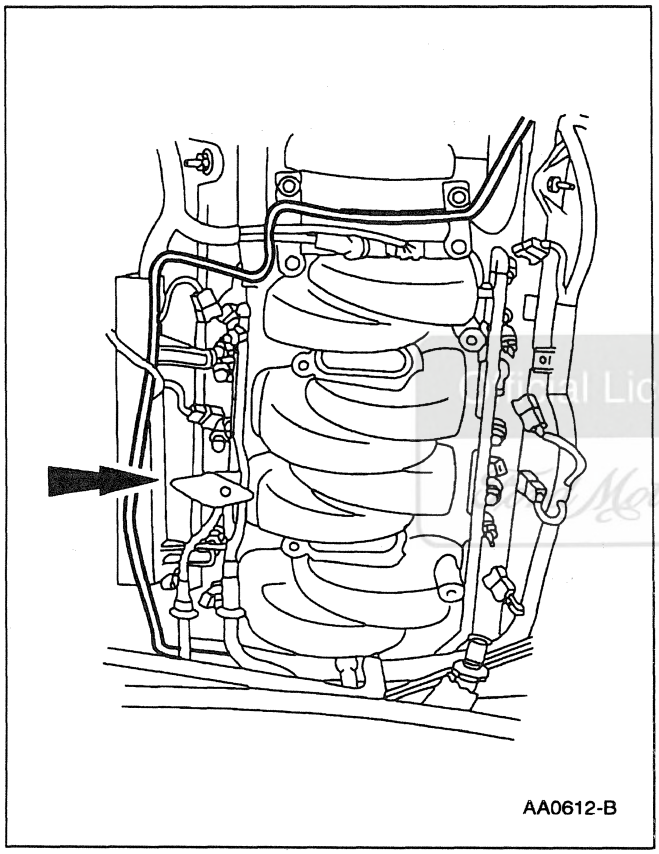

10. Disconnect the fuel injectors and move the fuel charging wiring (9D930) aside.

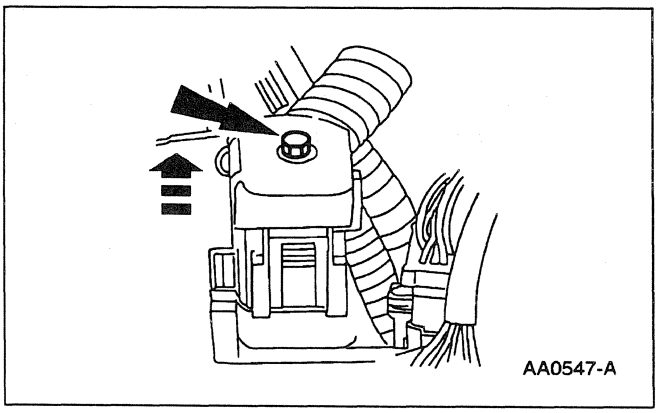

11. Disconnect the 42-pin connector at the rear of the LH valve cover.

Ford Motor Company Licensed Product

IN-VEHICLE REPAIR (Continued)

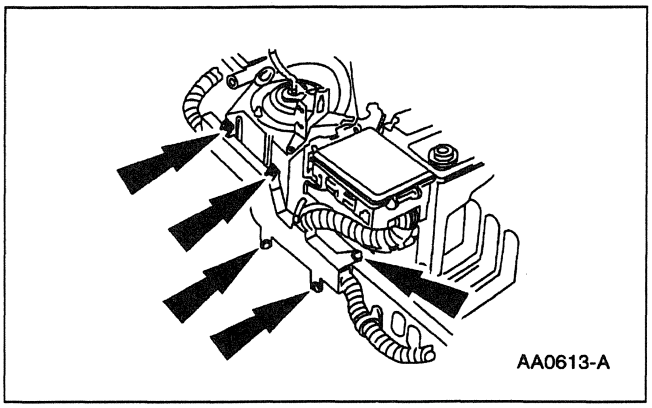

12. Disconnect the engine wiring from the fender apron.

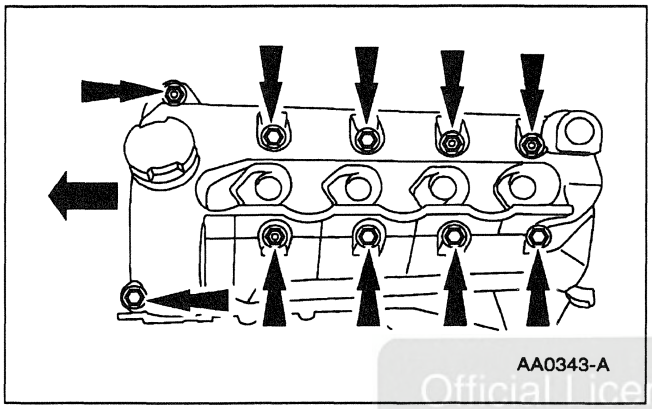

13. Remove the bolts and remove the valve cover (6582) and the valve cover gasket (6584).
    - Discard the valve cover gasket.

Official Licensed Product
Ford Motor Company

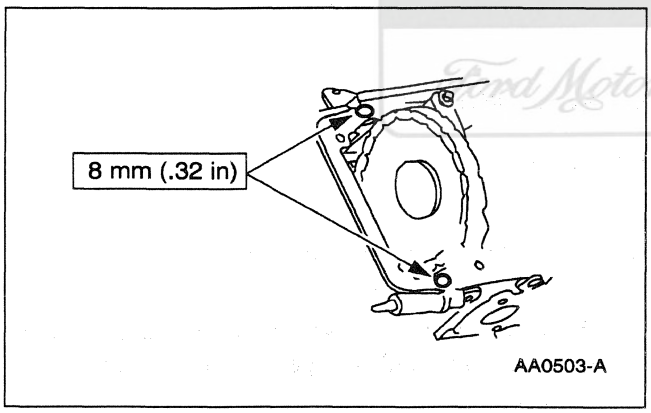

14. Apply Silicone Gasket and Sealant in two places where the engine front cover (6019) meets the cylinder head (6049).
    - Use Silicone Gasket and Sealant F6AZ-19562-AA or equivalent meeting Ford specification WSE-M4G323-A6.

Installation

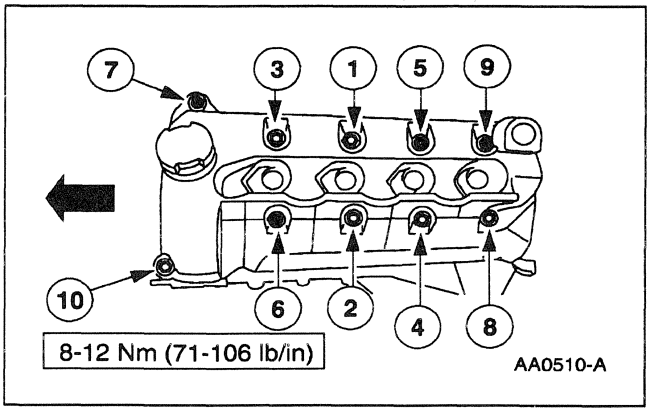

1. Follow the removal procedure in reverse order.
    - Install a new camshaft cover gasket.
    - Check spark plug well seals for placement.

IN-VEHICLE REPAIR (Continued)

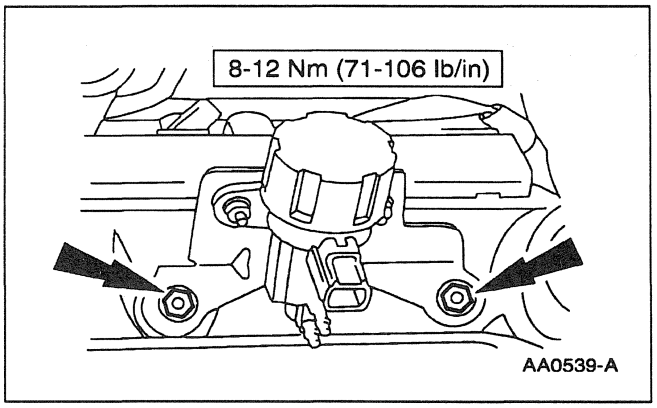

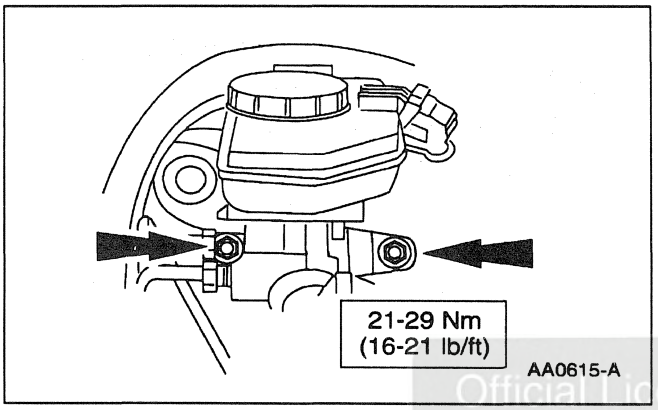

Official Licensed Product
Ford Motor Company

Valve Cover—RH

Removal

1. Remove the ignition coils; refer to Section 303-07.
2. Remove the upper intake manifold assembly; refer to Intake Manifold—Upper, Lower and IMRC in this section.
3. Remove the crankcase ventilation tube (6758) from the valve cover.

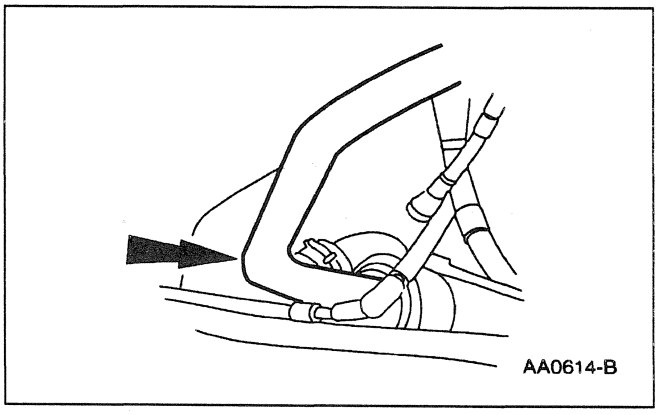

IN-VEHICLE REPAIR (Continued)

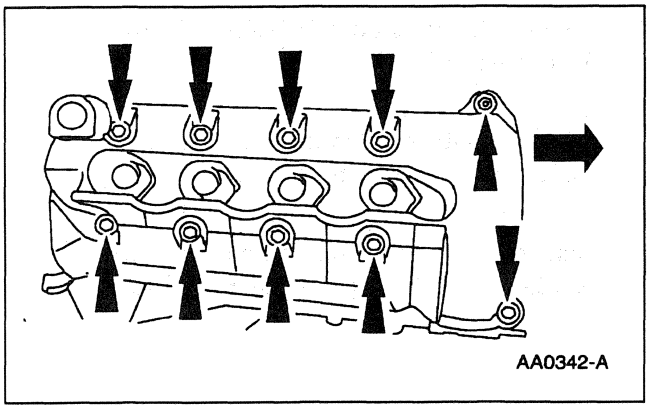

4. Remove the bolts and remove the valve cover (6582) and the valve cover gasket (6584).
   - Discard the valve cover gasket.

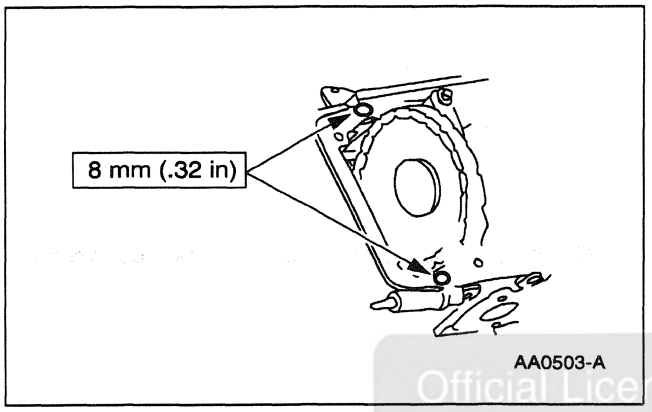

5. Apply Silicone Gasket and Sealant in two places where the engine front cover (6019) meets the cylinder head (6049).
   - Use Silicone Gasket and Sealant F6AZ-19562-AA or equivalent meeting Ford specification WSE-M4G323-A6.

Official Licensed Product
Ford Motor Company

Installation

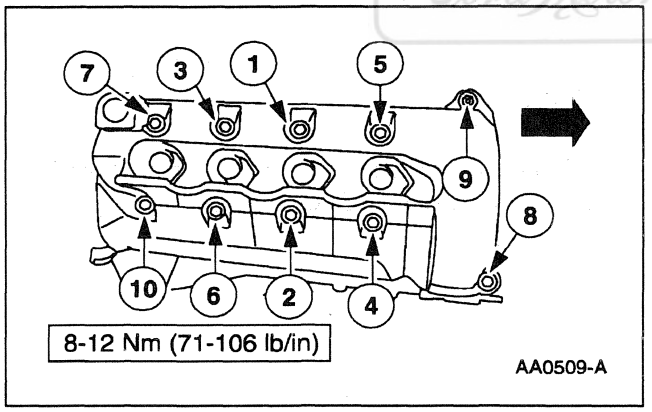

1. Follow the removal procedure in reverse order.
   - Install a new valve cover gasket.
   - Check the spark plug well seals for placement.
   - Use RTV on parting lines of the cylinder head (2 places).

Intake Manifold — Upper, Lower and IMRC

Removal

1. Remove the water bypass tube (8548); refer to Section 303-03.

IN-VEHICLE REPAIR (Continued)

2. Remove the generator (GEN)(10300); refer to Section 414-02.

3. Disconnect the accelerator ad cruise control cables; refer to Section 310-03.

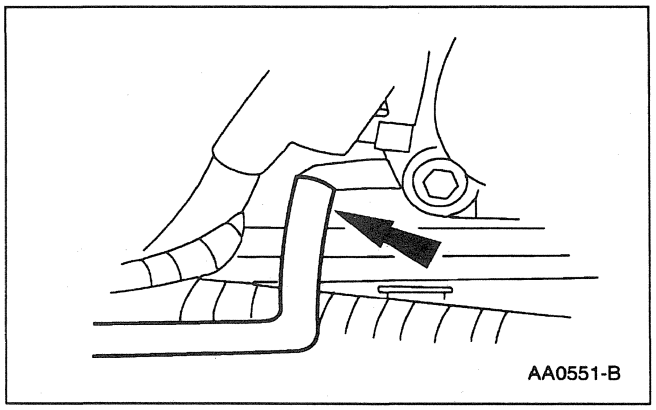

4. Disconnect the evaporative emission hose (9G297) from the upper intake manifold.

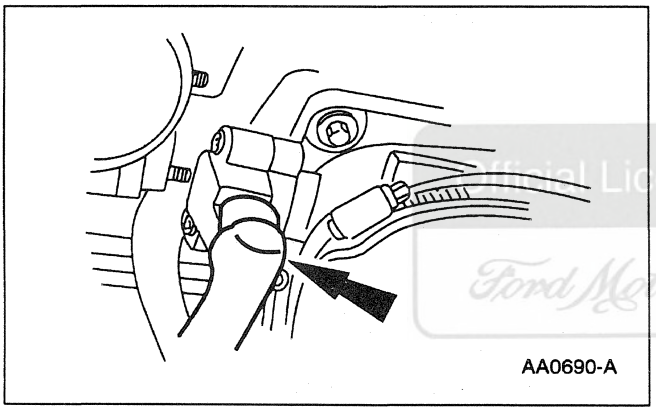

5. Disconnect the throttle position sensor connector.

Official Licensed Product
Ford Motor Company

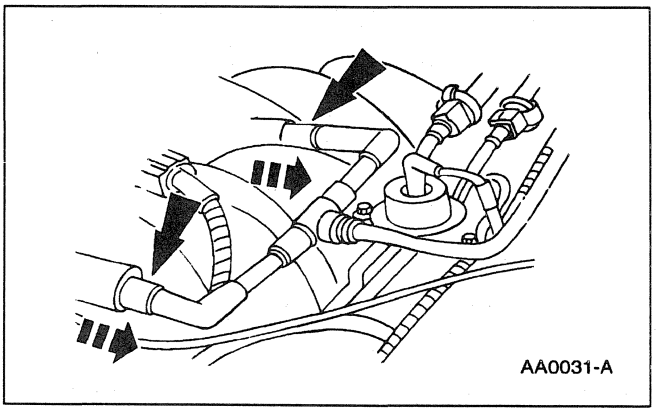

6. Disconnect the crankcase ventilation hose (6853) from the intake manifold.

IN-VEHICLE REPAIR (Continued)

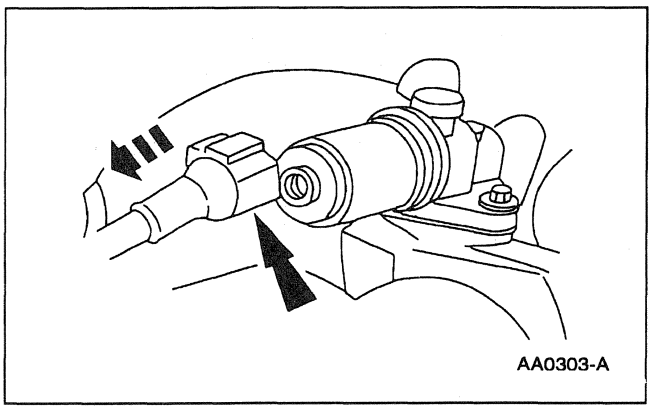

7. Disconnect the idler air control valve connector.

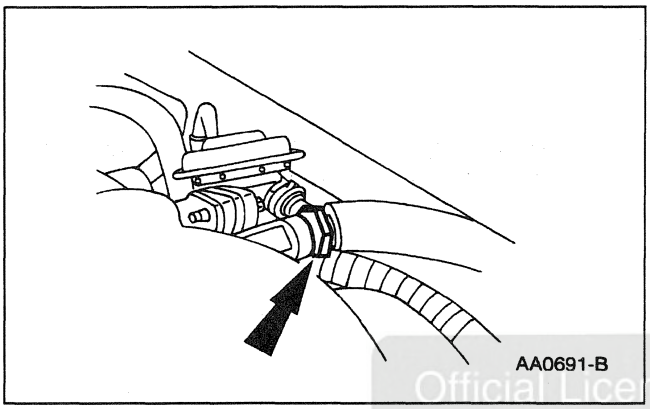

8. Loosen the EGR tube nut from the EGR valve (EGR valve)(9D475).

Official Licensed Product
Ford Motor Company

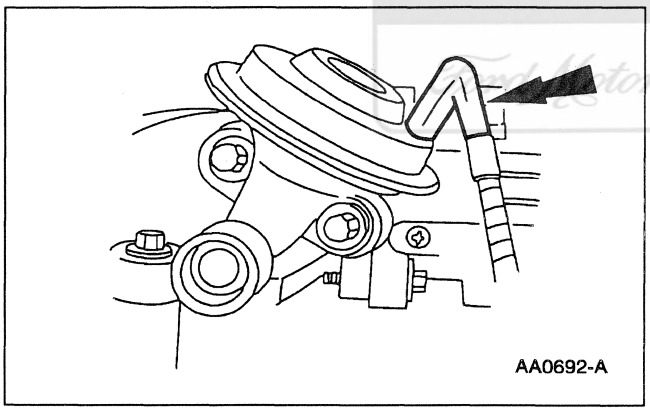

9. Disconnect the EGR valve vacuum hose.

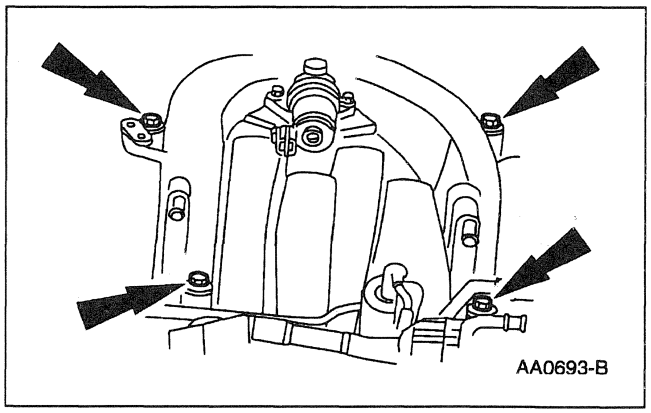

10. Remove the bolts and remove the upper intake manifold.

IN-VEHICLE REPAIR (Continued)

11. Remove the fuel injection supply manifold (9F792); refer to Section 303-04.

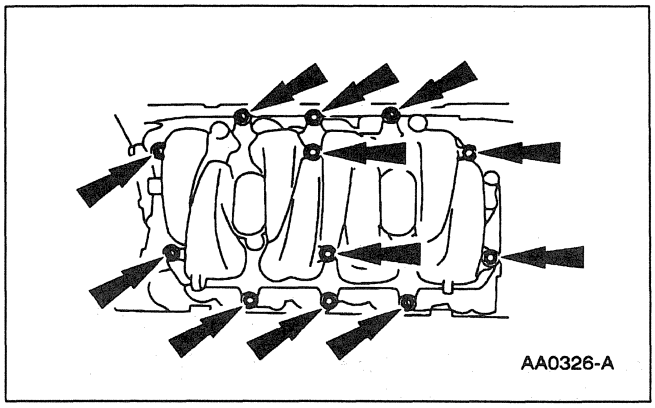

12. Remove the bolts and remove the lower intake manifold.

13. Disconnect the RH and the LH intake manifold runner control (IMRC).

Official Licensed Product
Ford Motor Company

IN-VEHICLE REPAIR (Continued)

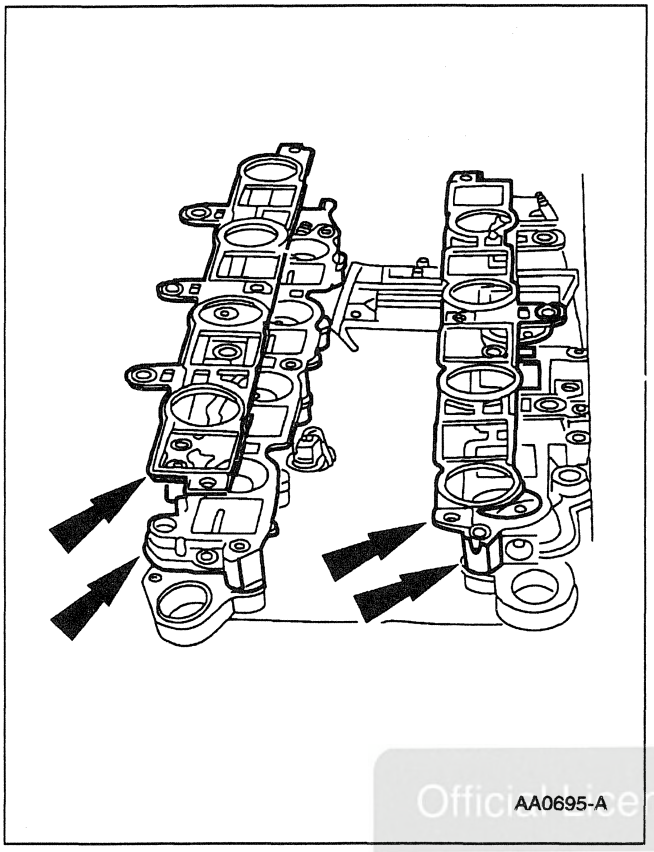

14. **NOTE:** The lower intake manifold runner control gaskets are housed within grooves on the bottom surface of the IMRC.

    Remove the intake manifold runner control and the upper and lower gaskets.

    - Discard the lower gaskets and use new lower gasket during installation.

Official Licensed Product
Ford Motor Company

IN-VEHICLE REPAIR (Continued)

Installation

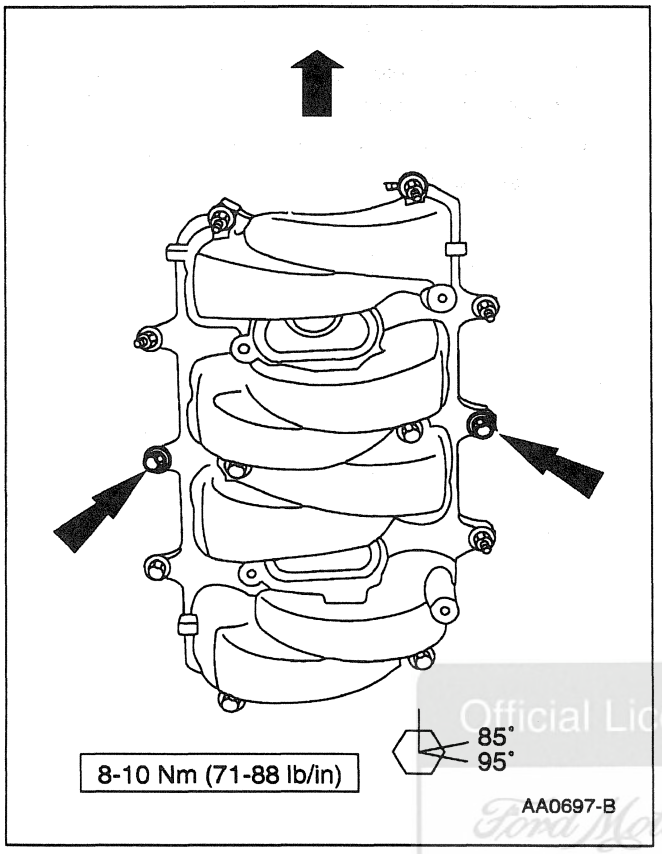

1. Follow the removal procedure in reverse order.

Official Licensed Product
Ford Motor Company

IN-VEHICLE REPAIR (Continued)

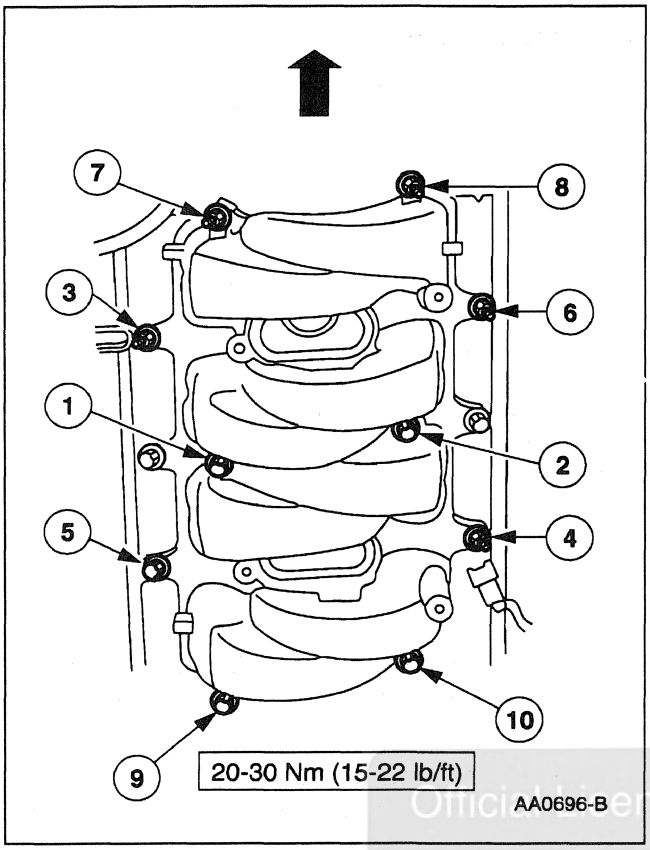

Official Licensed Product
Ford Motor Company

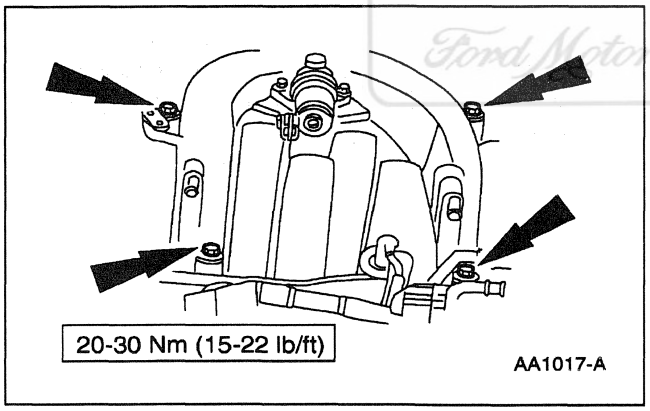

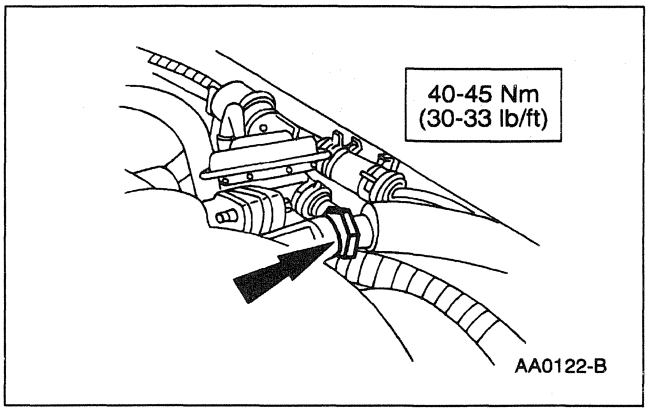

IN-VEHICLE REPAIR (Continued)

Roller Followers

Special Tool(s)

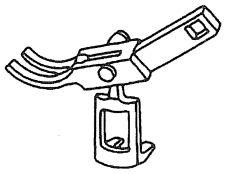 ST1718-A	Valve Spring Compressor (Intake) 303-452 (T93P-6565-A)
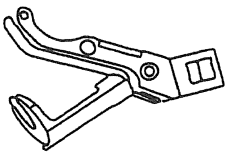 ST1693-A	Valve Spring Compressor (Exhaust) 303-567 (T97P-6565-AH)

1. Remove the valve cover (6582); refer to Valve Cover—RH and Valve Cover—LH in this section.
2. Position the piston (6108) of the cylinder being repaired at the bottom of the stroke and camshaft lobe at base circle.
3. Position the Valve Spring Compressor under the camshaft (6250) and on top of the valve spring retainer on the intake side.

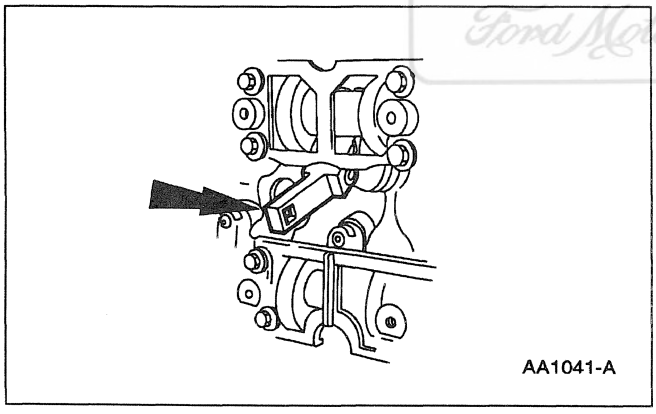

4. Position the valve spring compressor under the camshaft and on top of the valve spring retainer on the exhaust side.

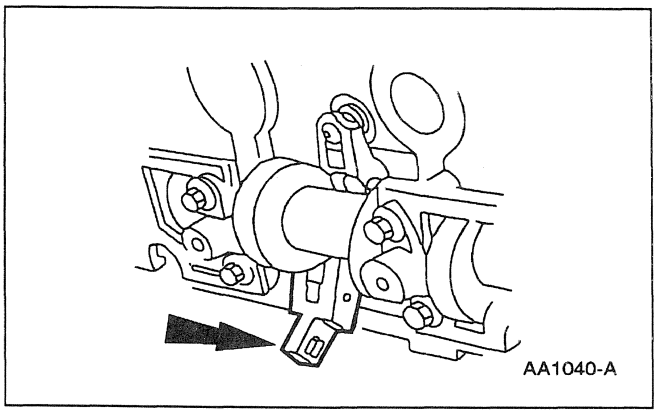

Official Licensed Product
Ford Motor Company

IN-VEHICLE REPAIR (Continued)

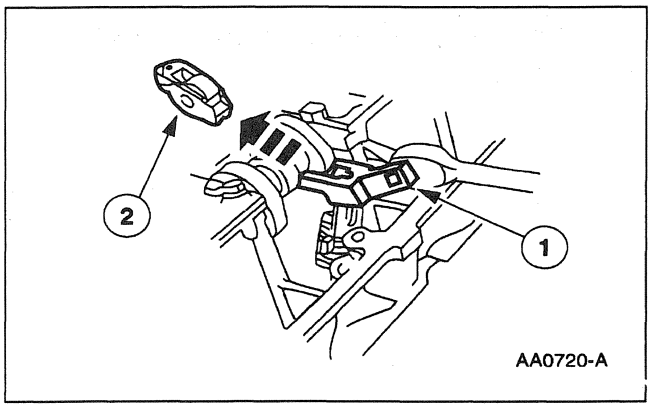

5. Remove the roller followers from the intake and exhaust sides.
   1 Compress the Valve Spring Compressor.
   2 Remove the roller followers.

6. Repeat Steps 2, 3 and 4 to remove all the necessary roller followers.

Installation

1. Follow the removal procedure in reverse order.

Hydraulic Lash Adjusters

Official Licensed Product
Ford Motor Company

1. Remove the roller followers; refer to Roller Followers in this section.

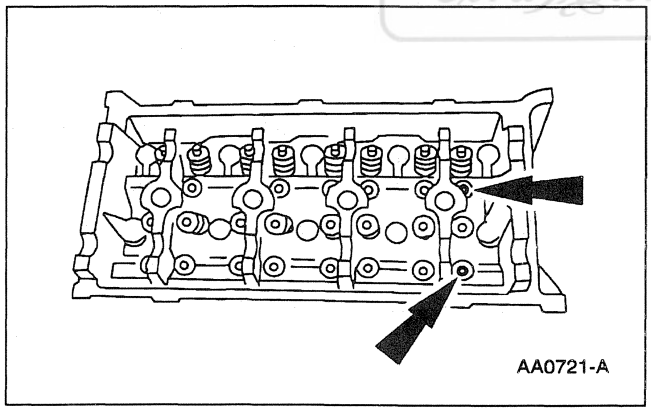

2. Remove the 16 hydraulic lash adjusters.

3. Inspect the roller followers; refer to Roller Followers in this section.

Installation

1. Follow the removal procedure in reverse order.

IN-VEHICLE REPAIR (Continued)

Valve Spring — Retainer and Valve Stem Seal

Special Tool(s)

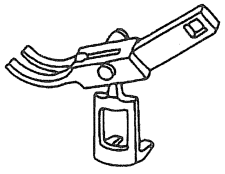 ST1718-A	Valve Spring Compressor 303-452 (T93P-6565-A)
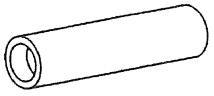 ST1332-A	Valve Stem Seal Replacer 303-383 (T91P-6571-A)

Official Licensed Product
Ford Motor Company

1. Remove the roller followers; refer to Roller Followers in this section.
2. Remove the spark plug (12405) from the applicable cylinder.
3. Position the piston, pin and ring (6102) of the cylinder being serviced at the bottom of the stroke.

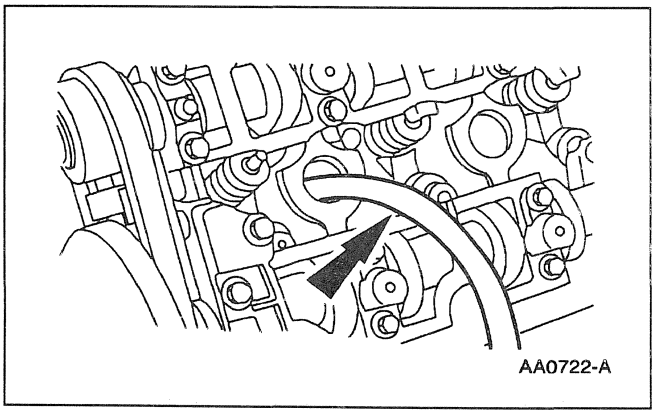
AA0722-A

4. **CAUTION: If air pressure has forced the piston to the bottom of the cylinder any loss of air pressure will allow the valve to fall into the cylinder. If air pressure must be removed support the valve prior to removal.**

   Use compressed air in the cylinder to hold both valves in position.

IN-VEHICLE REPAIR (Continued)

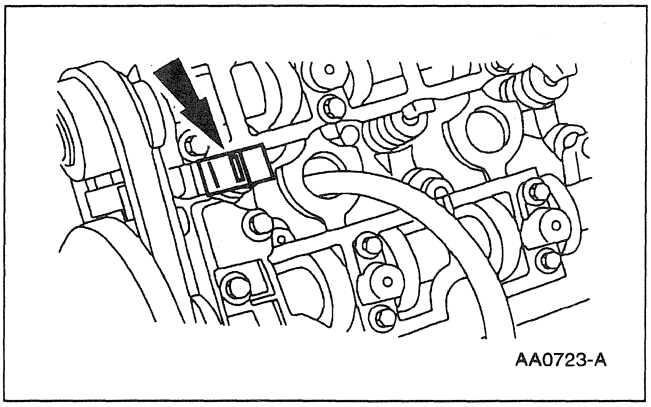
AA0723-A

5. Use the Valve Spring Compressor to compress the valve spring (6513).

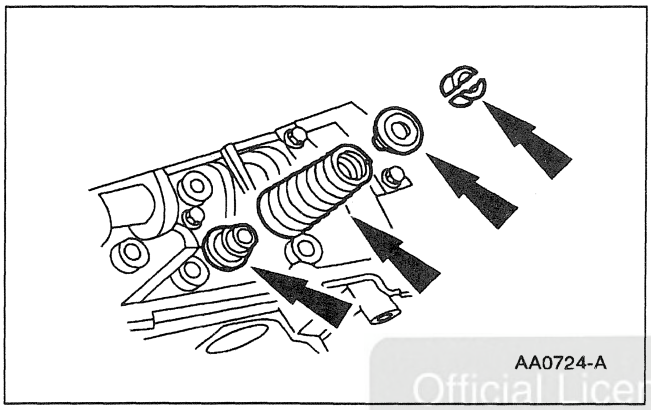
AA0724-A

6. Remove the valve spring retainer keys (6518), the valve spring retainer (6514), the valve spring and the valve stem seal (6571).

Official Licensed Product
Ford Motor Company

Installation

1. Follow the removal procedure in reverse order.

Front Oil Seal

Special Tool(s)

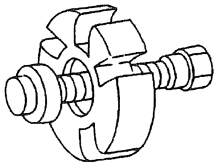 ST1286-A	Crankshaft Damper Remover 303-009 (T58P-6316-D)
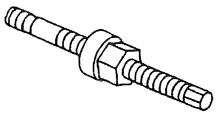 ST1287-A	Crankshaft Damper Replacer 303-102 (T74P-6316-B)

Special Tool(s)

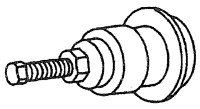 ST1719-A	Crankshaft Seal Replacer/Aligner 303-335 (T88T-6701-A)
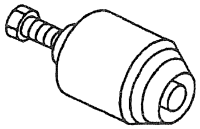 ST1288-A	Front Cover Seal Remover 303-107 (T74P-6700-A)

(Continued)

IN-VEHICLE REPAIR (Continued)

Removal

1. Disconnect the battery ground cable (14301).

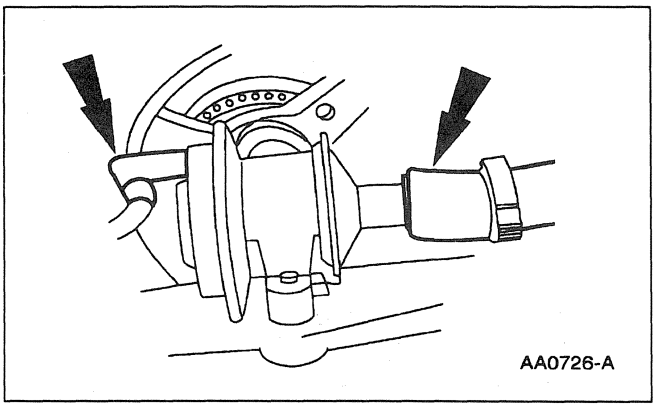

2. Disconnect the diverter valve hoses.

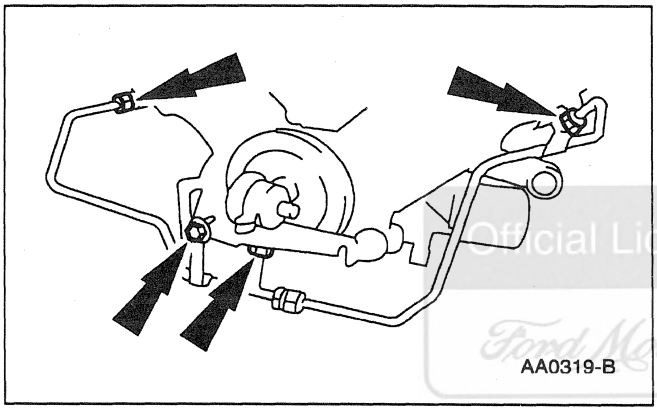

3. Disconnect the tube from both exhaust manifolds and the diverter valve.

Official Licensed Product
Ford Motor Company

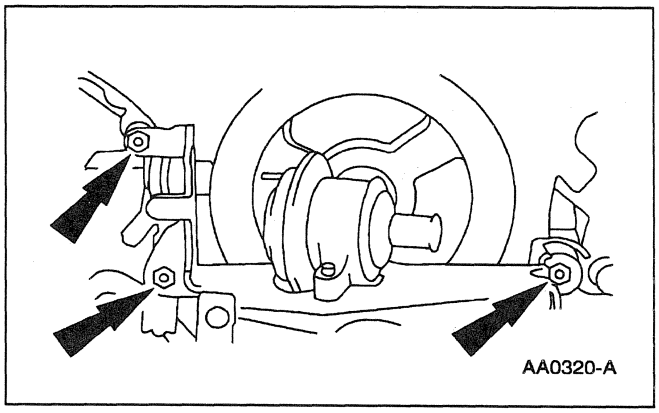

4. Remove the nuts from the bracket and remove the secondary air injection diverter valve (9F491).

5. Remove the drive belt (8620); refer to Section 303-05.

IN-VEHICLE REPAIR (Continued)

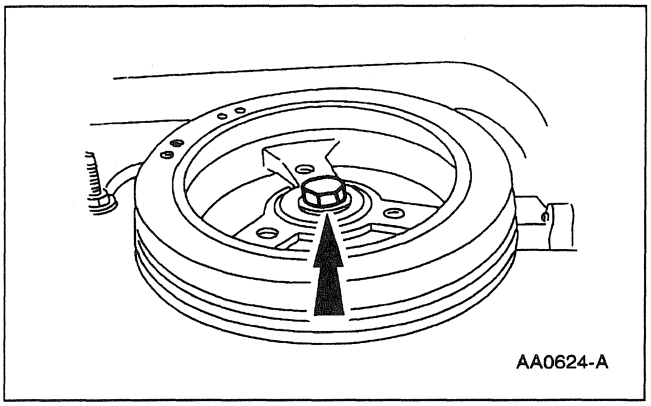

6. Remove the bolt.

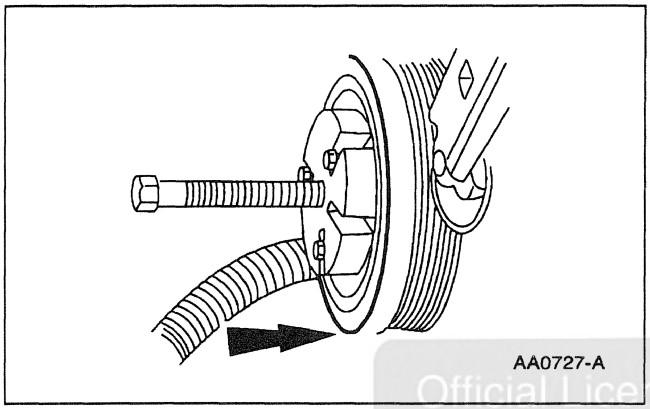

7. Remove the crankshaft pulley (6312) using the Crankshaft Damper Remover.

Official Licensed Product
Ford Motor Company

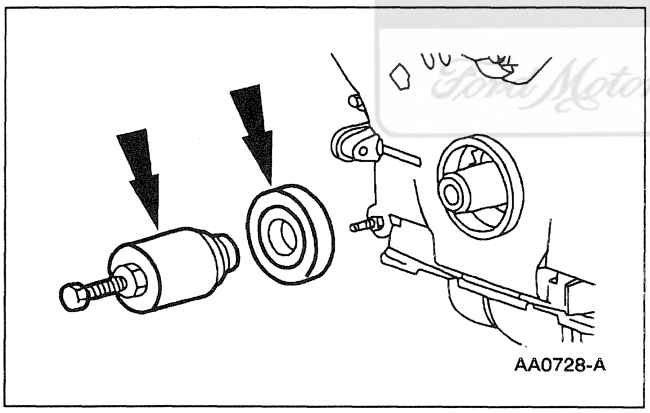

8. Use the Front Cover Seal Remover to remove the front cover seal.

Installation

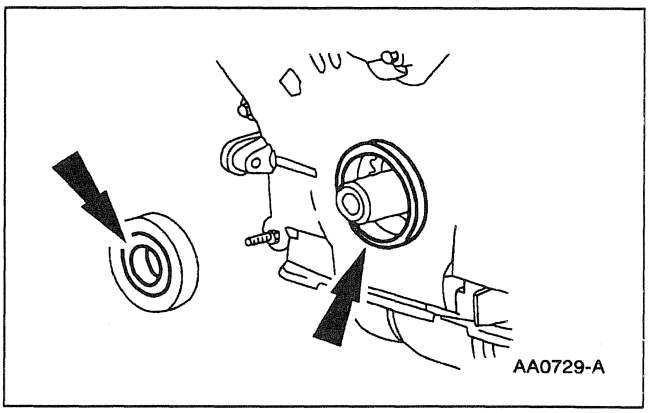

1. Lubricate the engine front cover and the front oil seal inner lip.
   - Use clean engine oil meeting Ford specification WSS-M2C153-G.

IN-VEHICLE REPAIR (Continued)

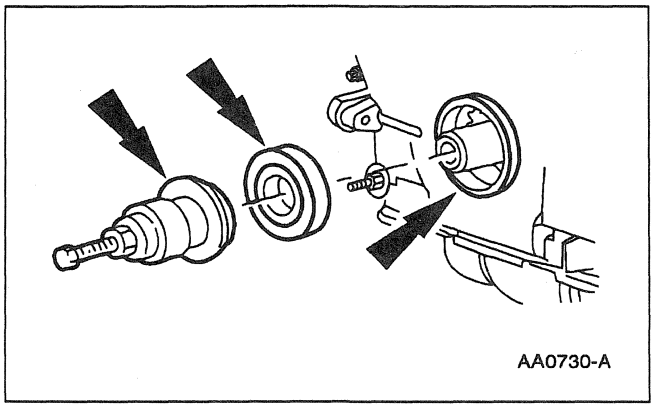
AA0730-A

2. Use the Crankshaft Seal Replacer/Aligner to install the crankshaft front seal (6700) into the engine front cover (6019).

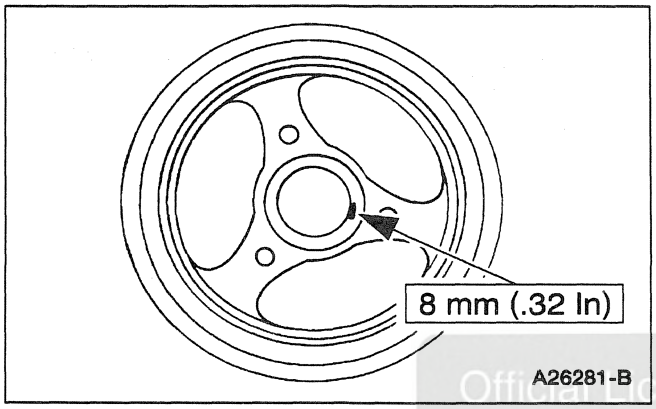

A26281-B

3. Apply silicone to the woodruff key slot on the crankshaft pulley.
   - Use Silicone Gasket and Sealant F6AZ-19562-AA or equivalent meeting Ford specification WSE-M4G323-A6.

Official Licensed Product
Ford Motor Company®

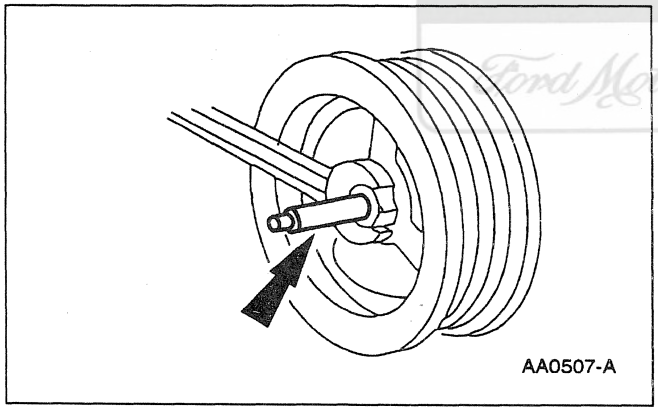
AA0507-A

4. Use the Crankshaft Damper Replacer/Aligner to install the crankshaft pulley.

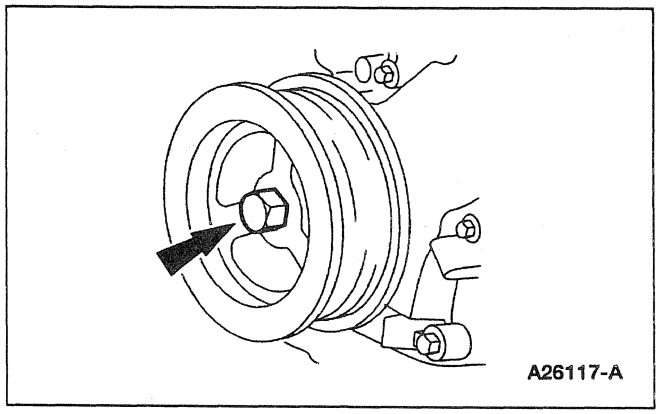
A26117-A

5. Loosely install the bolt.

IN-VEHICLE REPAIR (Continued)

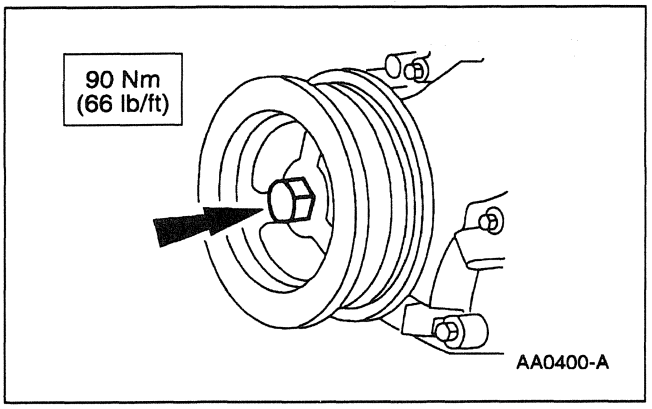

6. **NOTE:** Make sure to tighten the crankshaft pulley bolt in four steps.
   Tighten the bolt.

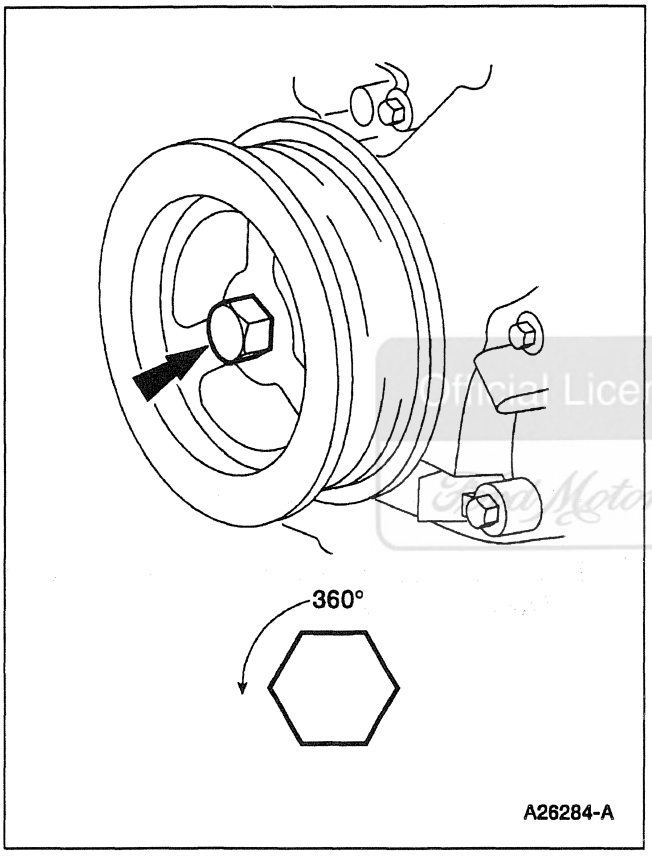

7. Loosen the bolt.

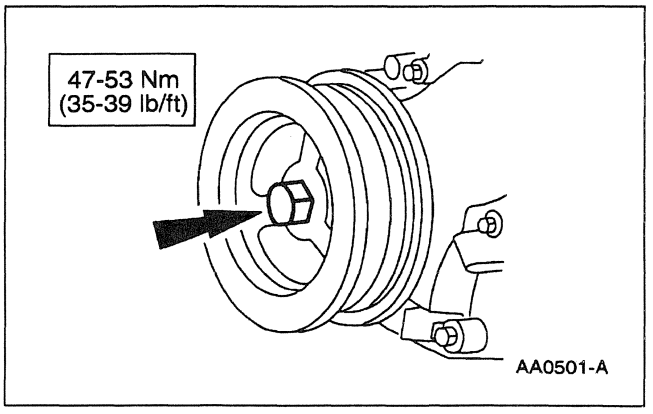

8. Tighten the bolt.

Official Licensed Product
Ford Motor Company

IN-VEHICLE REPAIR (Continued)

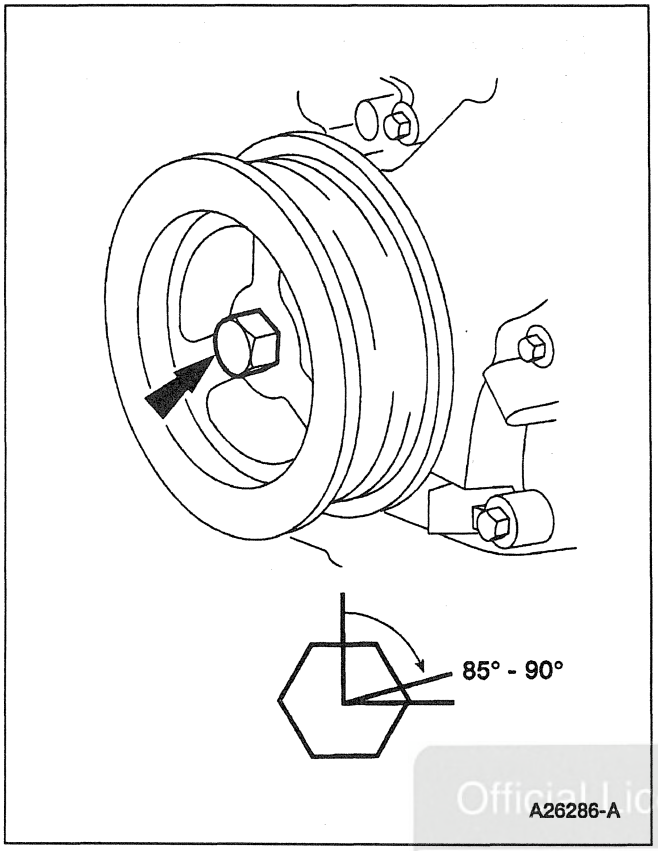

9. Tighten the bolt.

Official Licensed Product
Ford Motor Company

10. Install the drive belt; refer to Section 303-05.

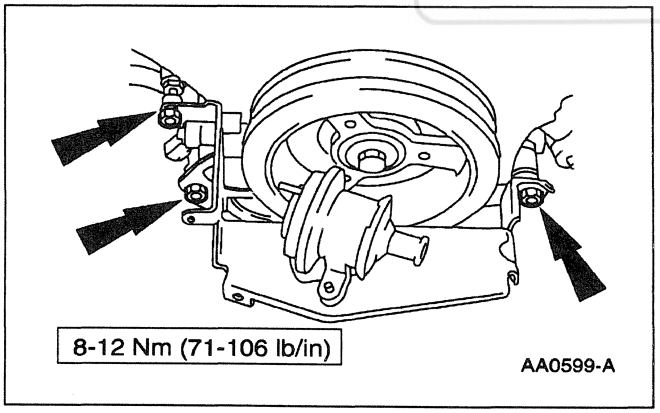

11. Install the secondary air injection diverter valve and tighten the nuts.

IN-VEHICLE REPAIR (Continued)

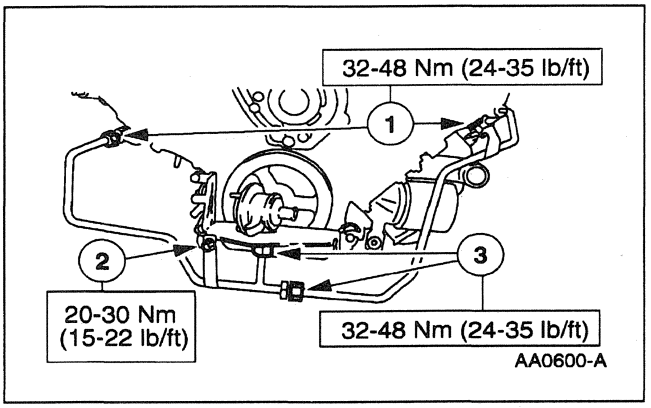

12. Connect the tube to the exhaust manifolds and the diverter valve.

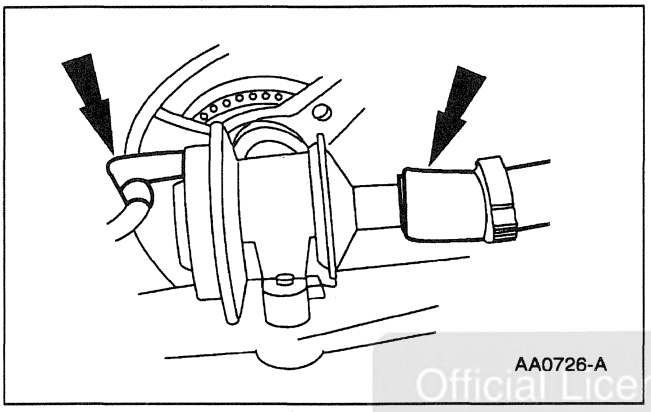

13. Connect the diverter valve hoses.

Official Licensed Product
Ford Motor Company

14. Connect the battery ground cable.

Engine Front Cover

Special Tool(s)

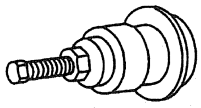 ST1719-A	Crankshaft Seal Replacer/Aligner 303-335 (T88T-6701-A)
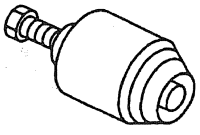 ST1288-A	Front Cover Seal Remover 303-107 (T74P-6700-A)

(Continued)

Special Tool(s)

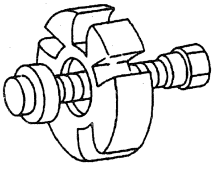 ST1286-A	Crankshaft Damper Remover 303-009 (T58P-6316-D)
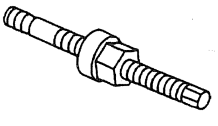 ST1287-A	Crankshaft Damper Replacer 303-102 (T74P-6316-B)

Removal

1. Disconnect the battery ground cable (14301).

IN-VEHICLE REPAIR (Continued)

2. Remove the water outlet tube and the water bypass tube hoses; refer to Section 303-03.

3. Remove the air cleaner outlet tube (9B659); refer to Section 303-12.

4. Remove the fan assembly; refer to Section 303-03.

5. Remove the drive belt (8620).

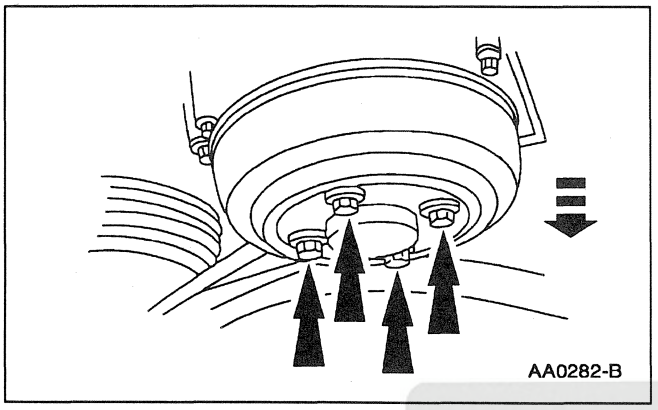

6. Remove the water pump pulley (8509).

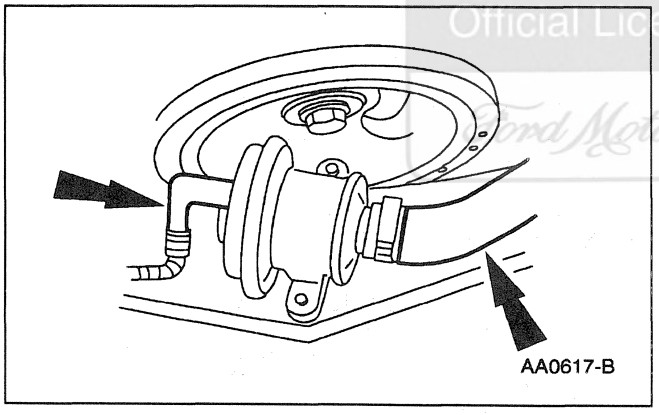

Official Licensed Product
Ford Motor Company

7. Remove the hoses from the secondary air injection diverter valve (9F491) and disconnect from the engine front cover stud.

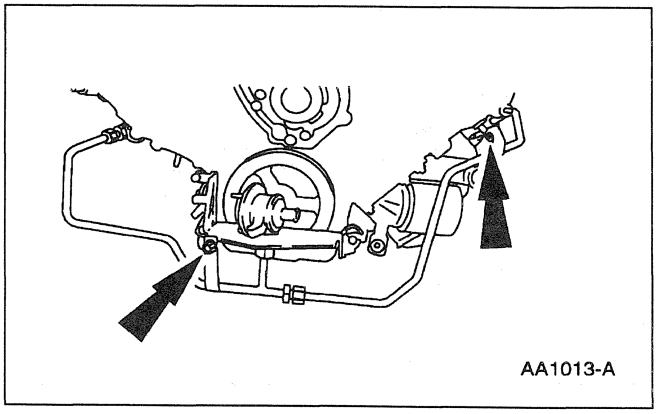

8. Remove the bolt from the secondary air injection manifold tube (9B449).

9. Raise and support the vehicle; refer to Section 100-02.

IN-VEHICLE REPAIR (Continued)

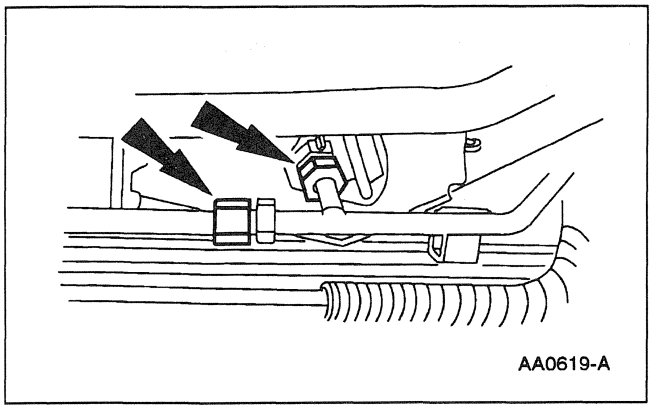
AA0619-A

10. Disconnect the secondary air injection manifold tube from the secondary air injection manifold tube and the secondary air injection manifold tube from the secondary air injection diverter valve.

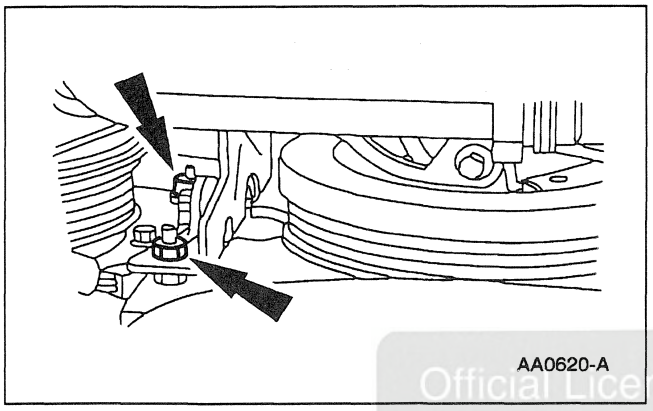
AA0620-A

11. Remove the three nuts from the bracket and remove the secondary air injection diverter valve.

Official Licensed Product
Ford Motor Company

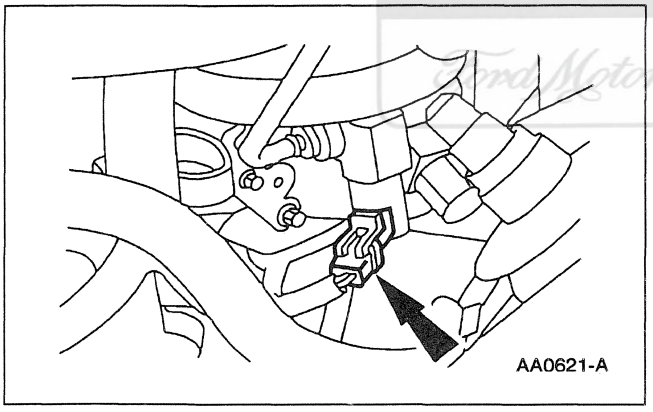
AA0621-A

12. Disconnect the power steering pump connector.

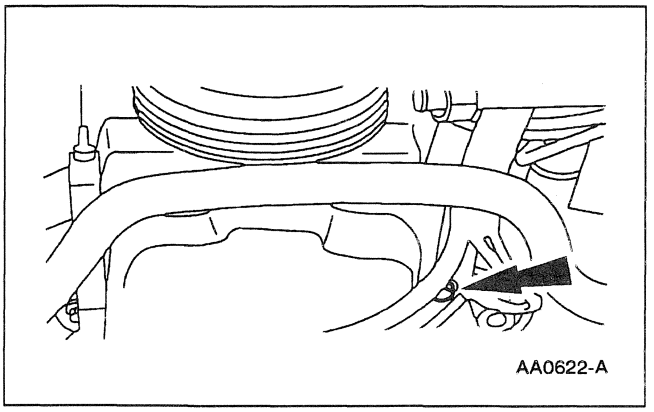
AA0622-A

13. Remove the bolts from the battery to starter relay cable (14300) and the bracket.

IN-VEHICLE REPAIR (Continued)

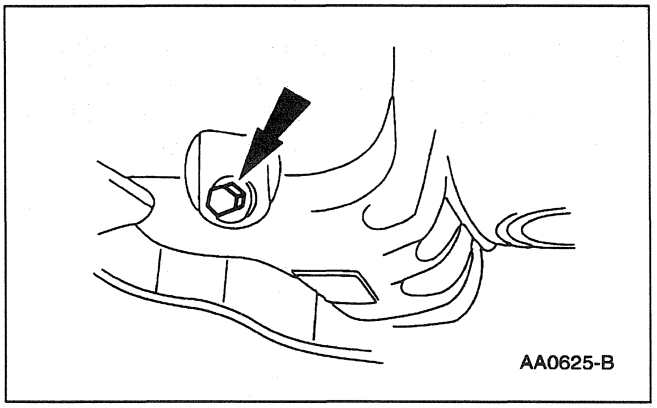

14. Remove the oil pan drain plug (6730) and drain the engine oil.

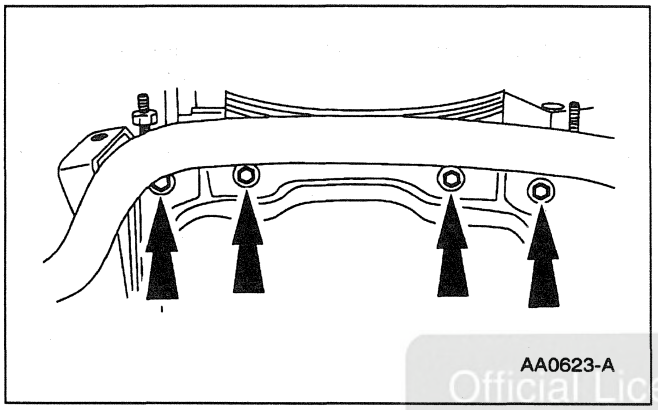

15. Remove the bolts from the oil pan (6675) to the engine front cover (6019).

Official Licensed Product
Ford Motor Company

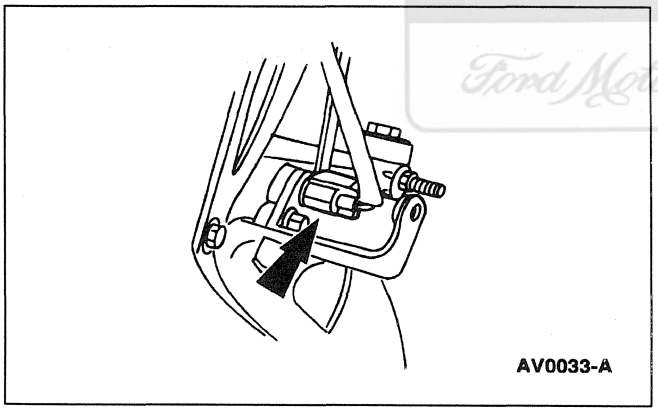

16. Disconnect the camshaft sensor connector.

17. Remove the power steering pump (3A674) and the power steering pump reservoir (3E764); refer to Section 211-02.

IN-VEHICLE REPAIR (Continued)

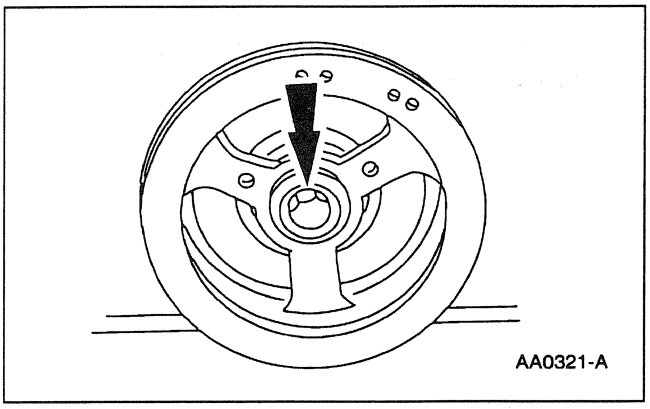

18. Remove the bolt.

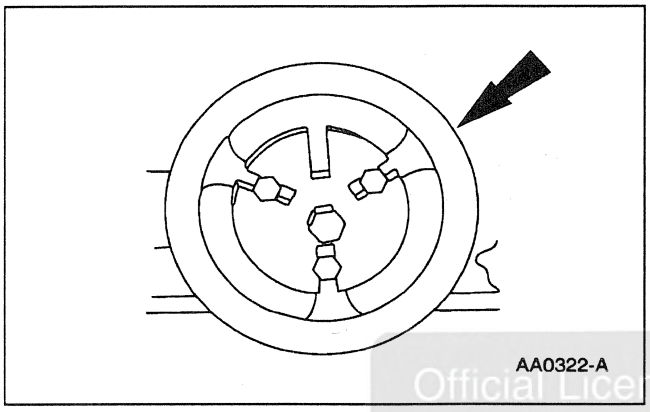

19. Remove the crankshaft pulley (6312) using the Crankshaft Damper Remover.

Official Licensed Product
Ford Motor Company

20. Remove the LH and the RH valve covers; refer to Valve Cover—RH and Valve Cover—LH in this section.

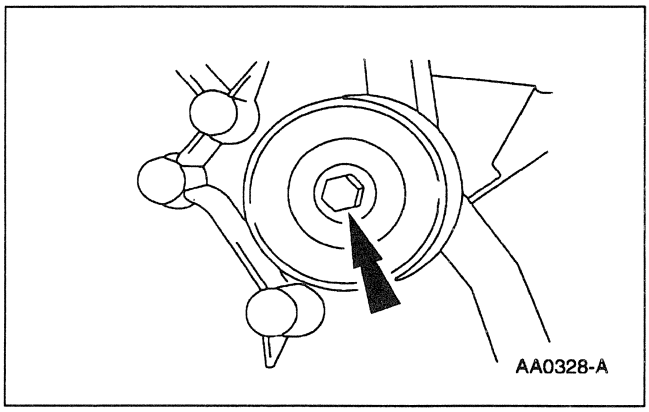

21. Remove the bolt and remove the belt idler pulley (8678).

IN-VEHICLE REPAIR (Continued)

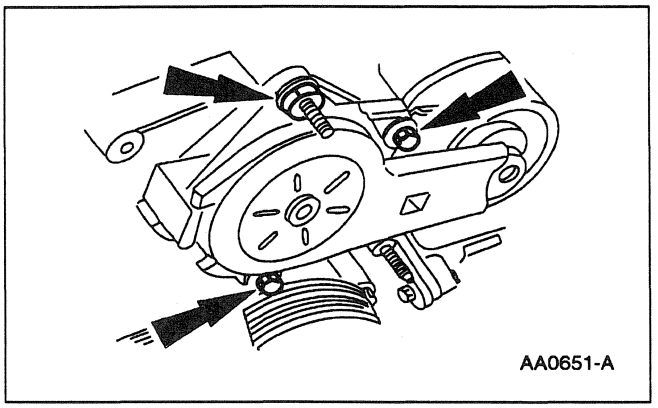

22. Remove the bolts and remove the drive belt tensioner (6B209).

23. Disconnect the crankshaft position sensor connector.

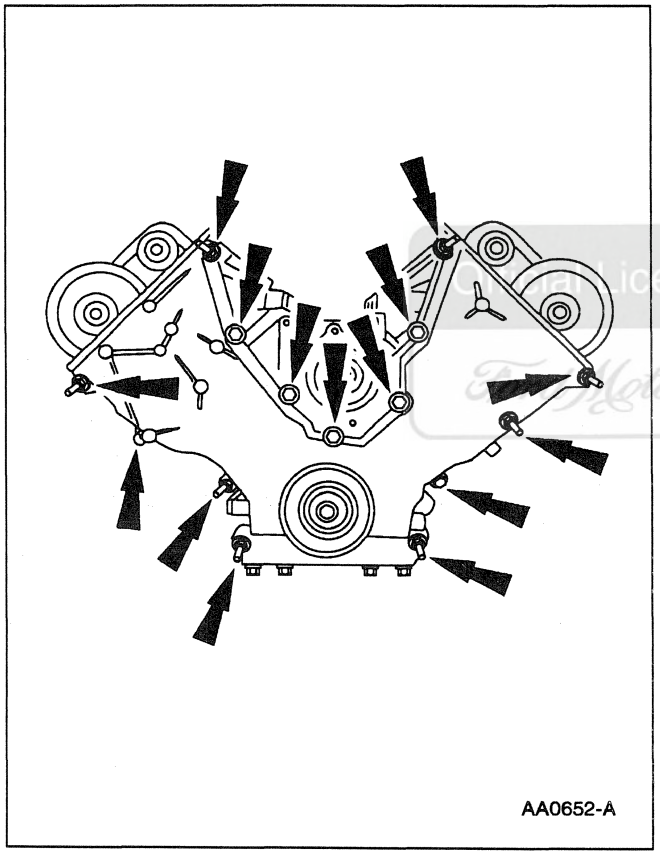

24. Remove the bolts and remove the engine front cover and discard the gaskets.

Ford Licensed Product
Ford Motor Company

IN-VEHICLE REPAIR (Continued)

Installation

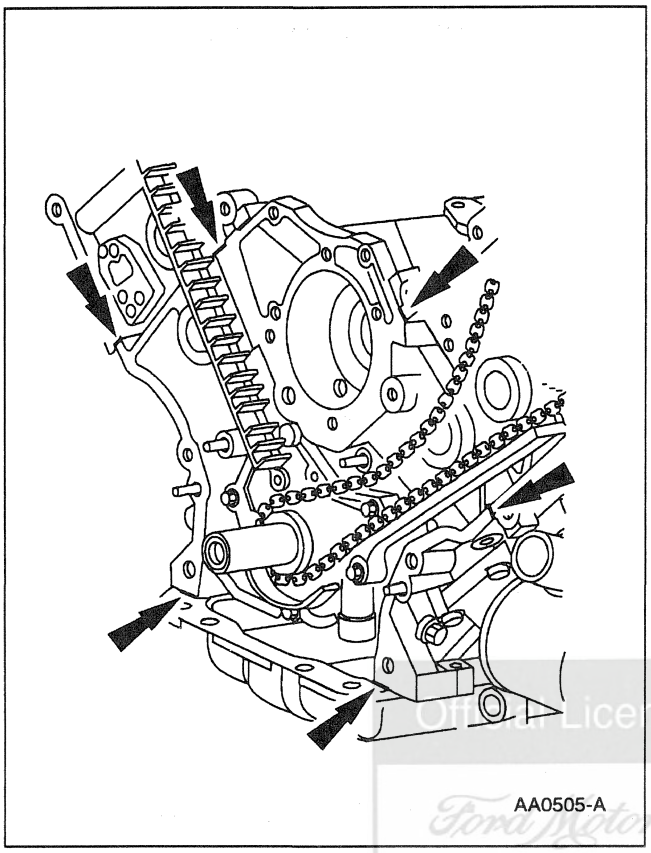

1. Apply silicone along the head to block surface and block to oil pan (6 places).
   - Use Silicone Gasket Sealant F6AZ-19562-AA or equivalent meeting Ford specification WSE-M4G323-A6.

Official Licensed Product
Ford Motor Company

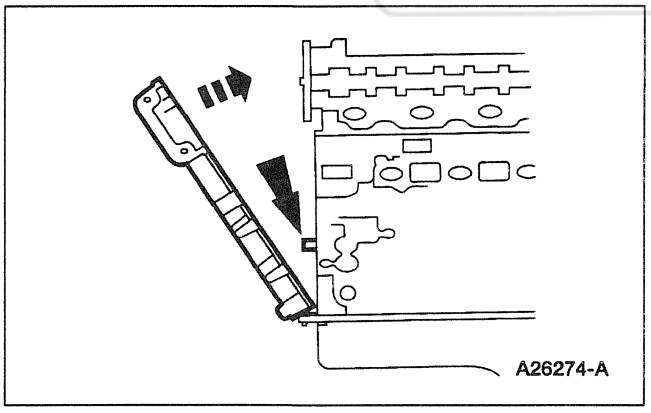

2. Install the engine front cover on the dowel pins on the front of the cylinder block (6010).

IN-VEHICLE REPAIR (Continued)

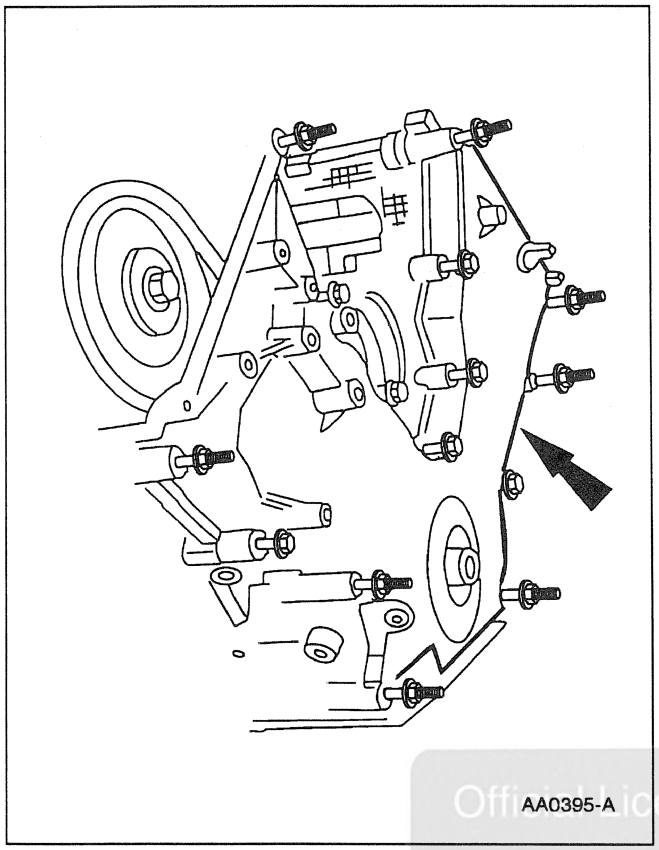

3. **NOTE:** Studs number 1, 6 and 7 are shorter than number 11-15.

   Loosely install the bolts and studs.

Official Licensed Product
Ford Motor Company

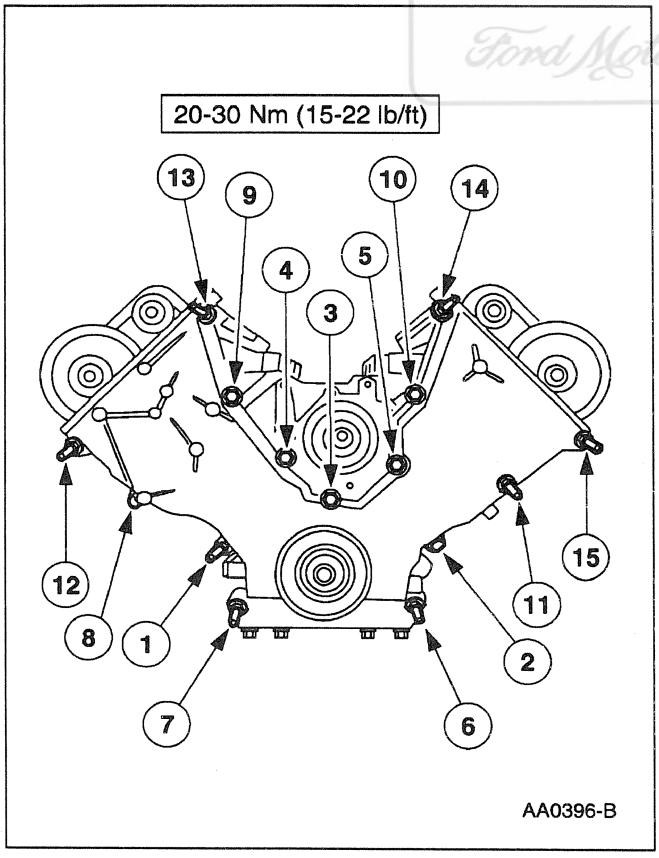

4. Tighten the bolts in the sequence shown.

IN-VEHICLE REPAIR (Continued)

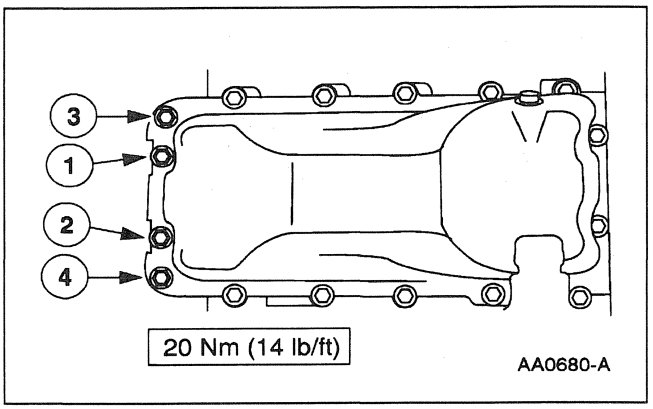

5. Install and tighten the bolts in two steps.

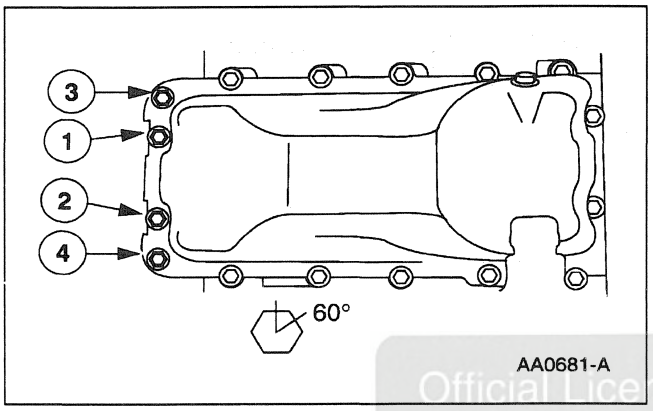

6. Tighten the bolts in the sequence shown.

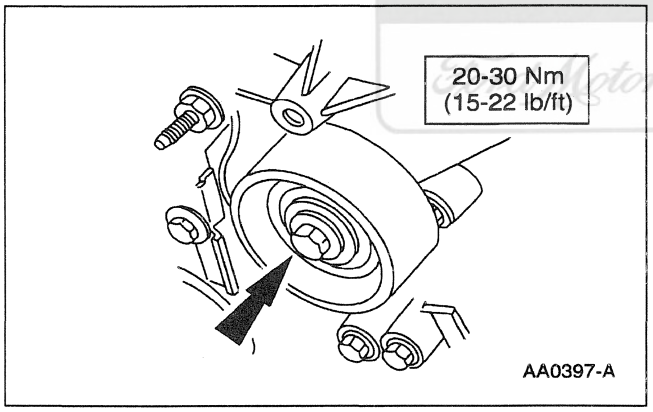

7. Position the belt idler pulley and install the bolt.

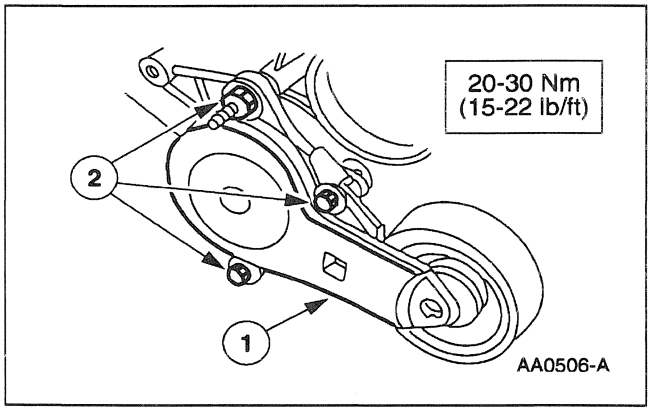

8. Install the drive belt tensioner.
   1 Position the drive belt tensioner.
   2 Install and tighten the bolts.

Official Licensed Product Ford Motor Company

IN-VEHICLE REPAIR (Continued)

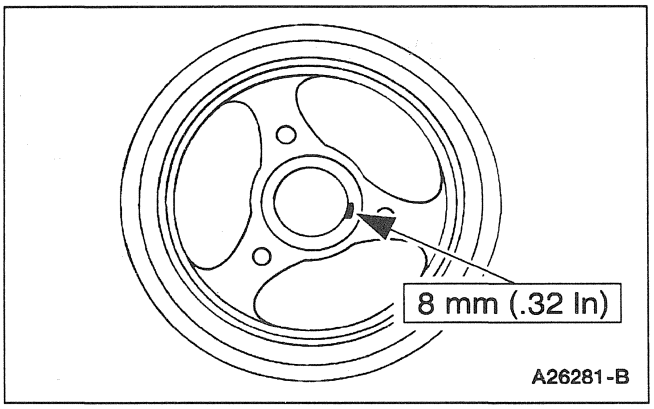

9. Apply silicone to the woodruff key slot on the crankshaft pulley.
   - Use Silicone Gasket and Sealant F6AZ-19562-AA or equivalent meeting Ford specification WSE-M4G323-A6.

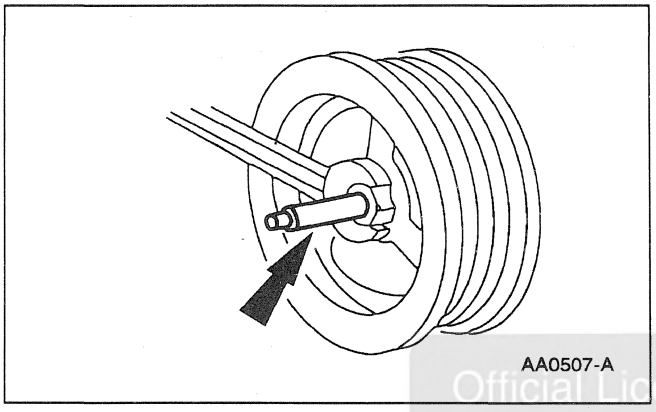

10. Use Crankshaft Damper Replacer to install the crankshaft pulley.

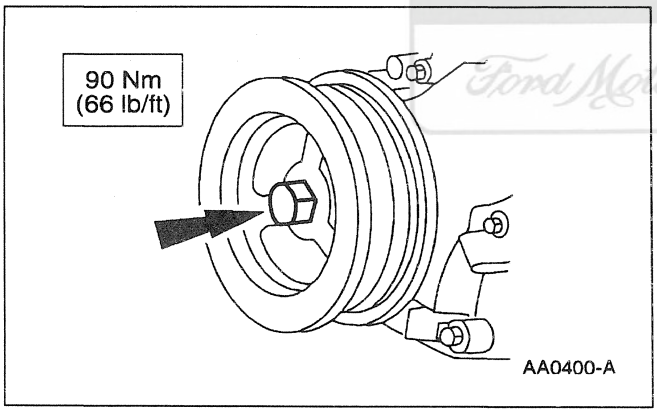

11. **NOTE:** Make sure to tighten the bolt in four steps.
    Tighten the bolt.

Official Licensed Product
Ford Motor Company

IN-VEHICLE REPAIR (Continued)

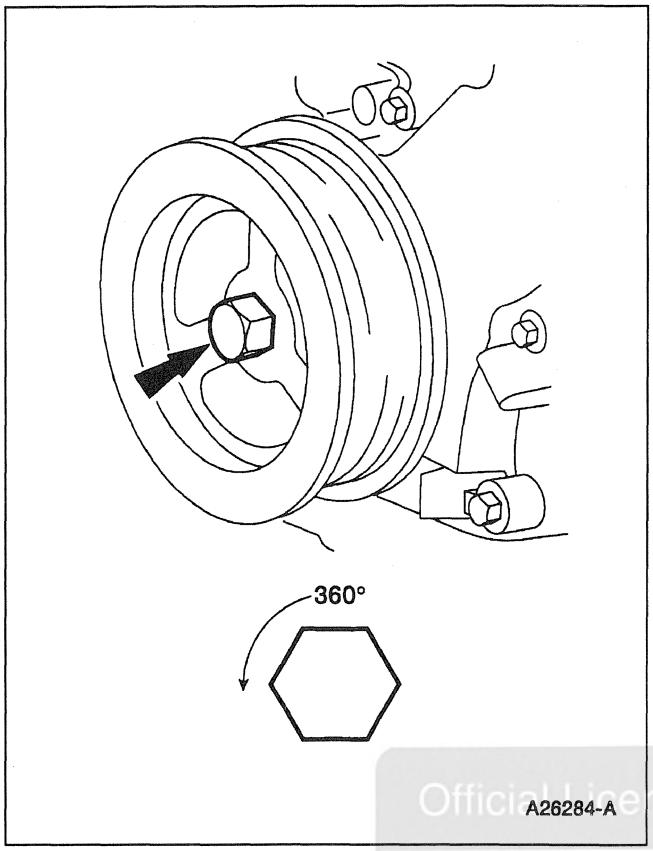

12. Loosen the bolt.

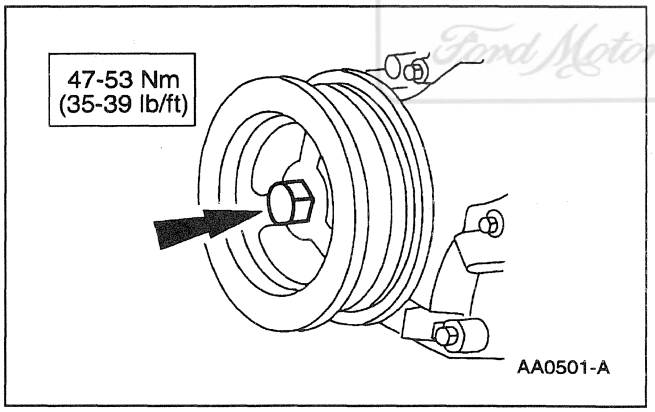

13. Tighten the bolt.

Official Licensed Product
Ford Motor Company®

IN-VEHICLE REPAIR (Continued)

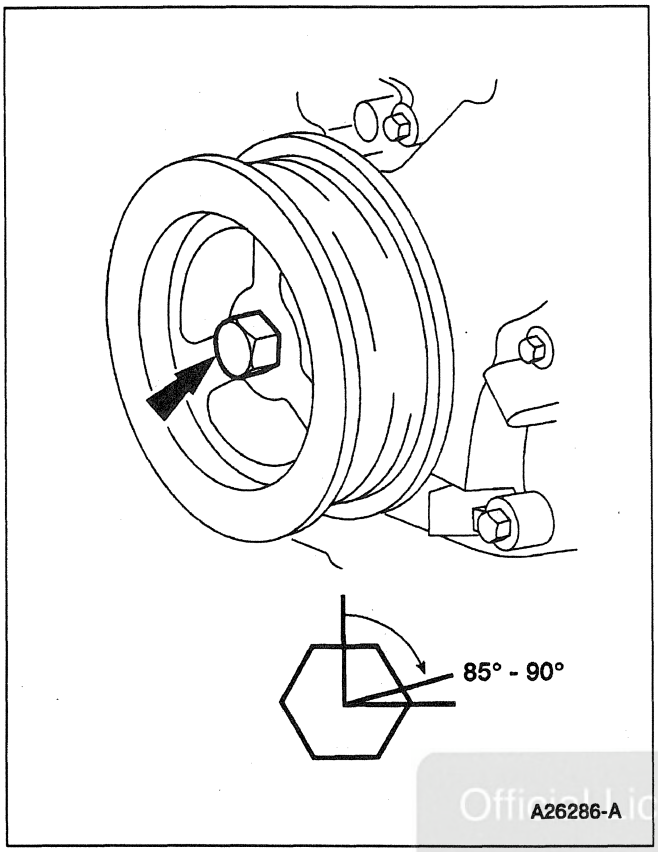

14. Tighten the bolt.

Official Licensed Product
Ford Motor Company®

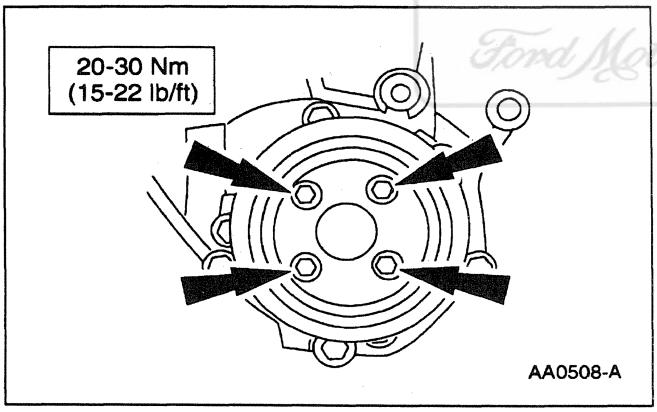

15. Install the water pump pulley and install the bolts.

16. Install the RH and the LH valve cover (6582); refer to Valve Cover—RH and Valve Cover—LH in this section.

IN-VEHICLE REPAIR (Continued)

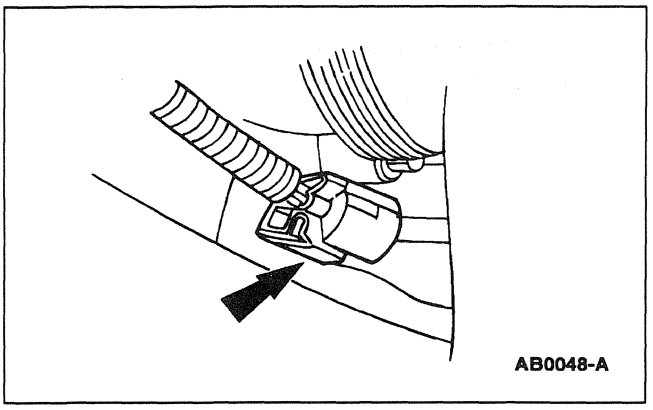

17. Connect the crankshaft position sensor connector.

18. Install the power steering pump and the power steering pump reservoir; refer to Section 211-02.

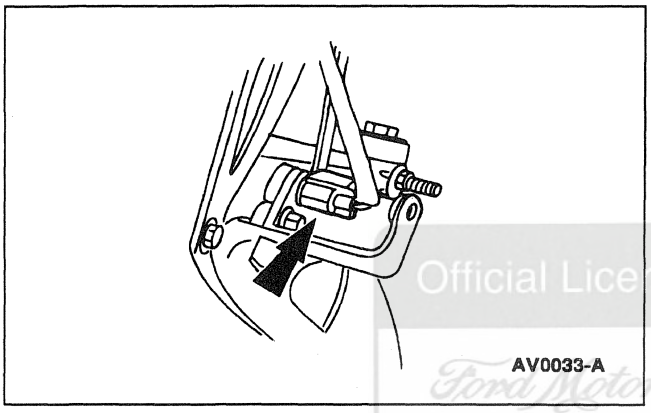

19. Connect the camshaft sensor connector.

Official Licensed Product
Ford Motor Company

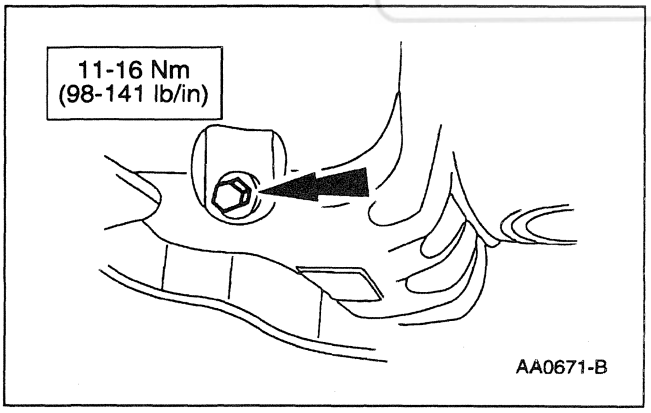

20. Install and tighten the oil pan drain plug.

IN-VEHICLE REPAIR (Continued)

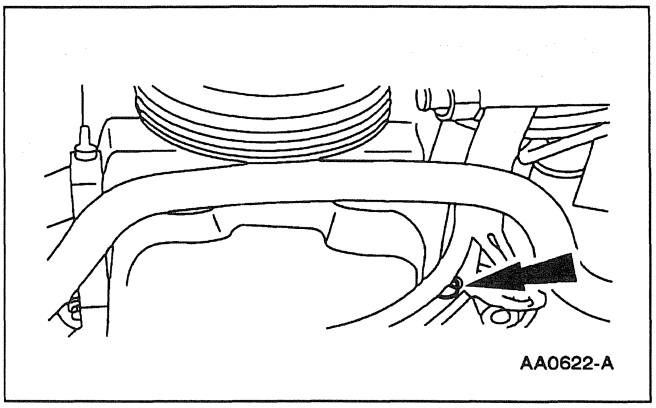

21. Install the bolts from battery to starter relay cable and the bracket.

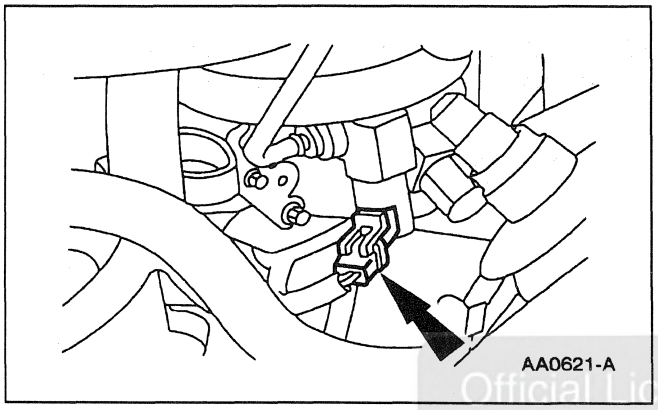

22. Connect the power steering pump connector.

Official Licensed Product
Ford Motor Company

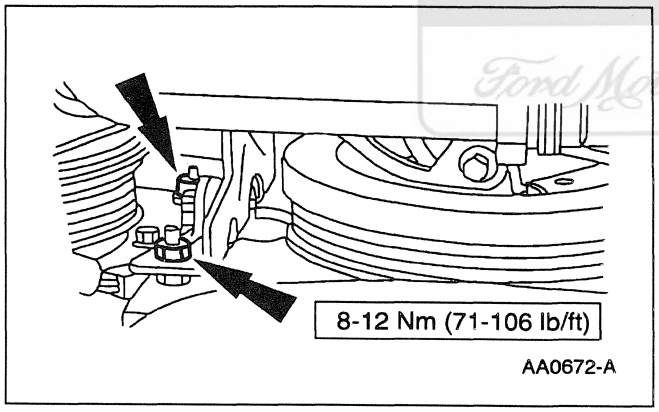

23. Install the three nuts from the bracket and remove the secondary air injection diverter valve.

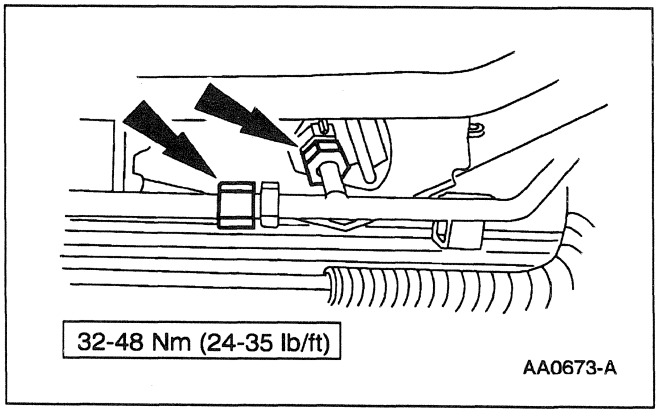

24. Connect the secondary air injection manifold tube to the secondary air injection diverter valve and the secondary air injection manifold tube to the secondary air injection diverter valve.

IN-VEHICLE REPAIR (Continued)

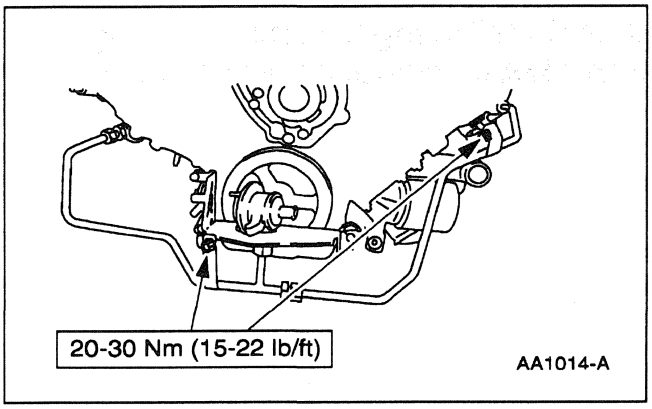

25. Install the bolt to the secondary air injection manifold tube.

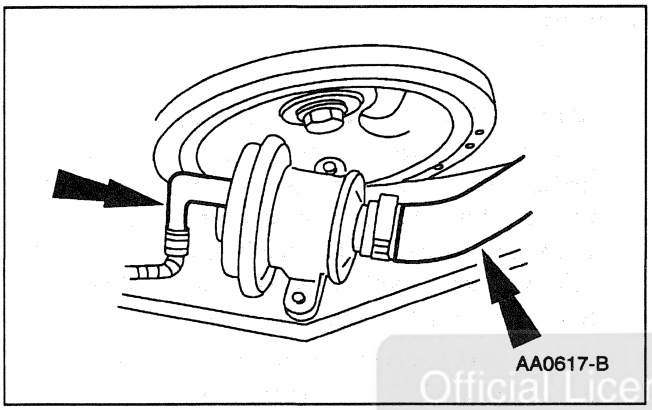

26. Connect the hoses to the secondary air injection diverter valve and the vacuum line to the engine front cover stud.

Official Licensed Product
Ford Motor Company

27. Install the drive belt.
28. Install the fan assembly; refer to Section 303-03.
29. Install the air cleaner outlet tube; refer to Section 303-12.
30. Install the water outlet tube and the water bypass tube hoses; refer to Section 303-03.
31. Connect the battery ground cable.
32. Fill the engine with oil.
    - Use clean engine oil meeting Ford specification WSS-M2C153-G.

IN-VEHICLE REPAIR (Continued)

Camshaft Timing Chains — Timing Sprockets, Tensioners and Guides

Special Tool(s)

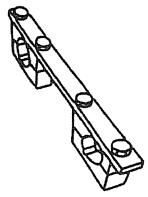 ST1715-A	Camshaft Holding Tool 303-446 (T93P-6256-AH)

Removal

1. ⚠ **CAUTION: At no time, when the timing chain(s) are removed and the cylinder heads are installed, may the crankshaft (6303) and/or the camshaft (6250) be rotated without following established procedures. Failure to follow these directions will result in valve and/or piston damage.**

   Remove the engine front cover (6019); refer to Engine Front Cover in this section.

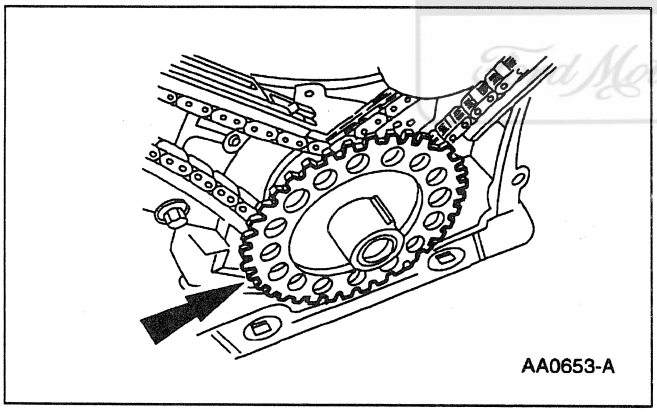
AA0653-A

2. Remove the crankshaft position sensor (CKP) pulse wheel.

Official Licensed Ford Motor Company

IN-VEHICLE REPAIR (Continued)

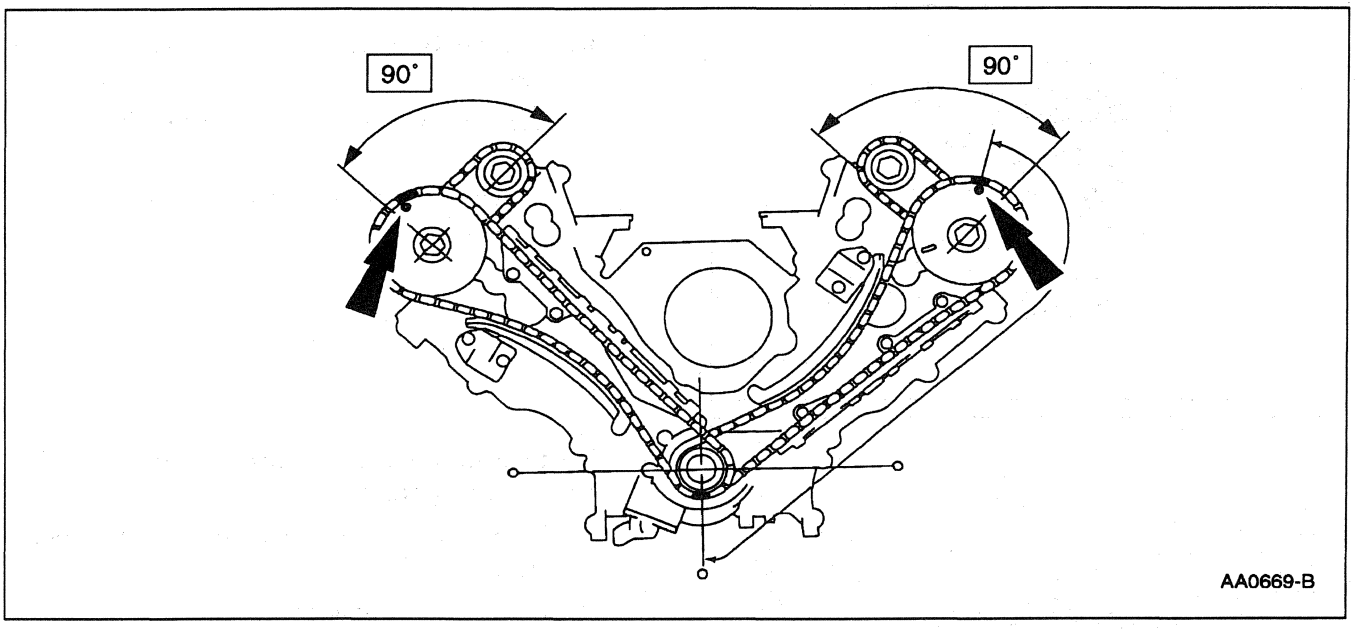

3. The timing marks on the camshaft sprocket must be on the top of both sprockets as shown.

Official Licensed Product
Ford Motor Company

4. Position the piston, pin and ring (6102) of the No. 1 cylinder to top dead center (TDC).

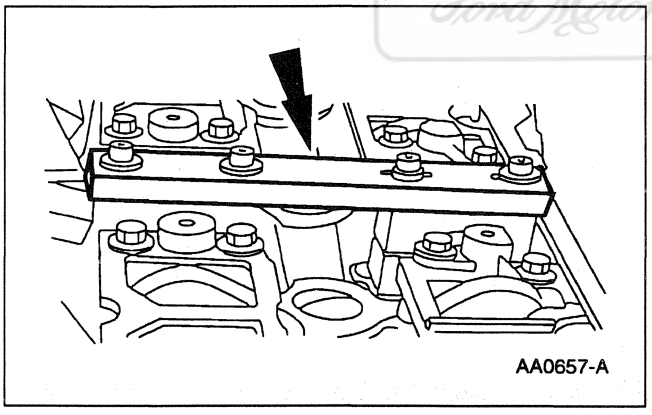

5. ⚠ **CAUTION: Failure to use Camshaft Holding Tool while assembling or disassembling timing chains will result in damage to D-slots or Camshaft Positioning Tool.**

   Install Camshaft Holding Tool onto camshaft to keep the camshafts from rotating and to prevent deformation of camshaft positioning tool.

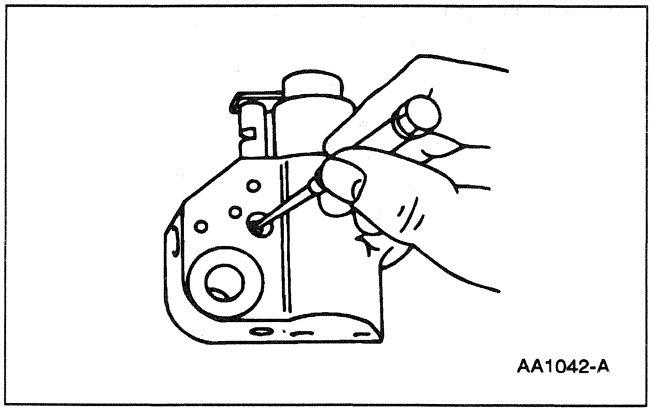

6. Release the rachet lock while the piston is being compressed.

IN-VEHICLE REPAIR (Continued)

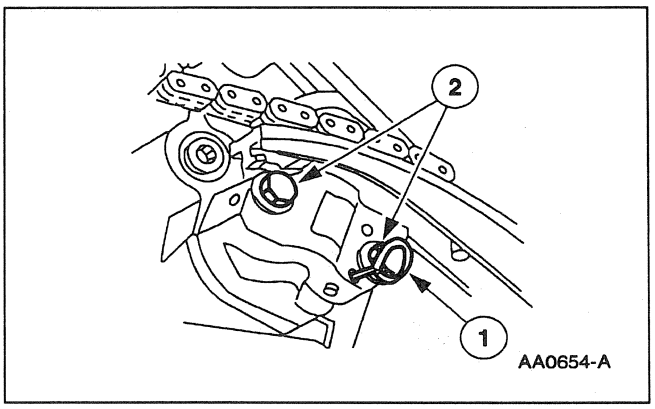

7. Remove the RH and the LH timing chain tensioner (6L266).
   1 Compress and insert a pin in the timing chain tensioner.
   2 Remove the bolts from the timing chain tensioner.

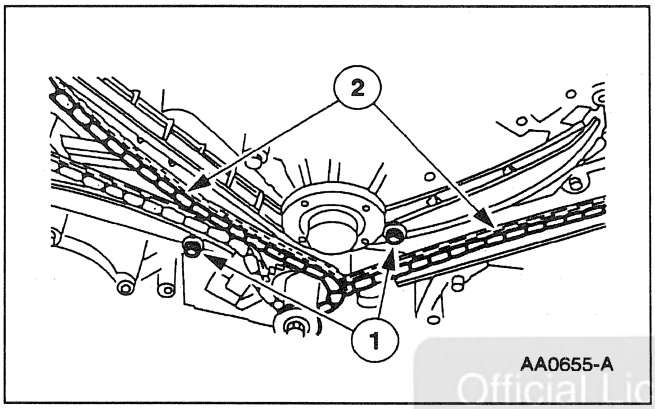

8. Remove the timing chain tensioner arm (6L253) and the timing chain.
   1 Remove bolts from the timing chain tensioner arm.
   2 Remove the timing chain.

Official Licensed Product
Ford Motor Company

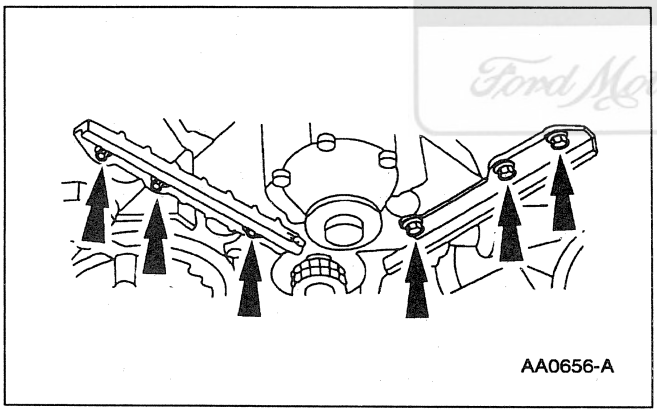

9. If necessary, remove the RH and the LH bolts.

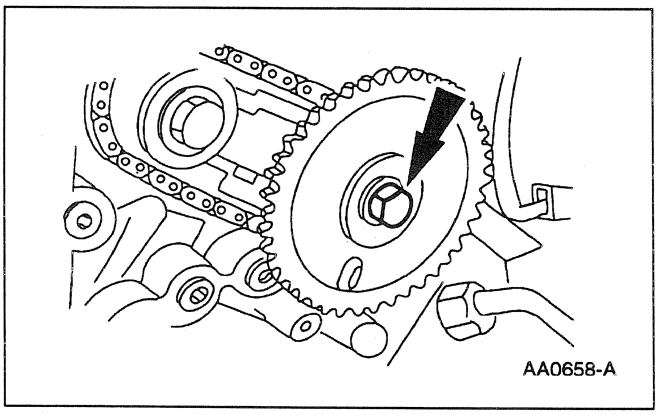

10. Remove the RH and the LH bolts and remove the camshaft sprockets (6256).

IN-VEHICLE REPAIR (Continued)

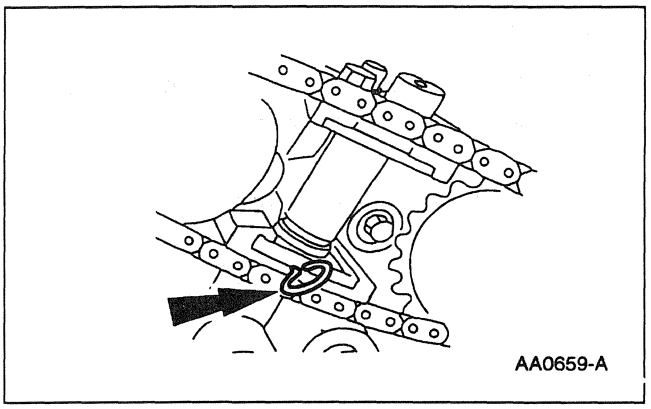
AA0659-A

11. Compress the RH and the LH tensioner and install a lock pin.

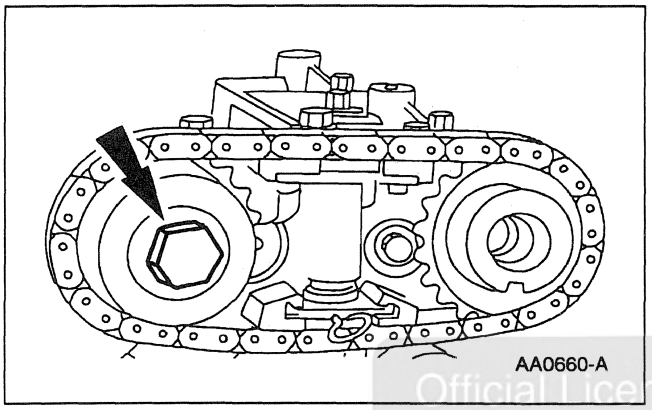
AA0660-A

12. Remove the RH and the LH bolt and washer.

Official Licensed Product
Ford Motor Company

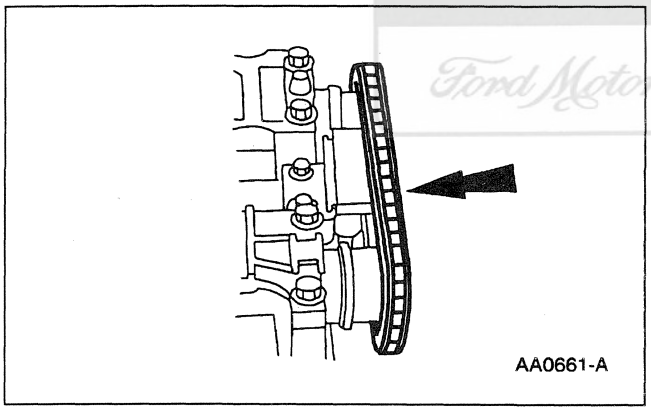
AA0661-A

13. Remove the RH and the LH timing chain/belt (6268) and the camshaft sprocket.

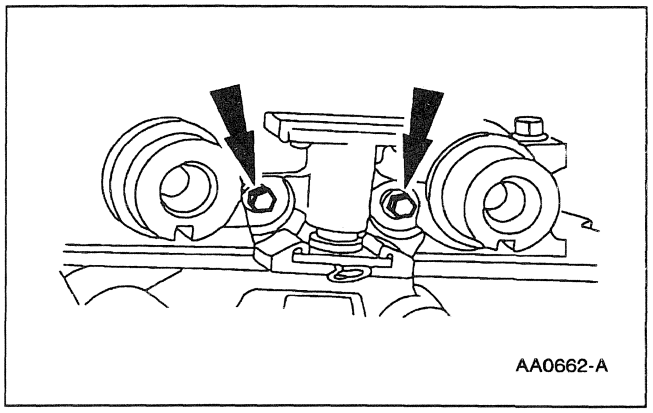
AA0662-A

14. **NOTE:** LH is shown, RH is similar.
    Remove the RH and the LH bolts.

IN-VEHICLE REPAIR (Continued)

Installation

NOTE: Do not remove the Camshaft Holding Tool until all parts are installed and tightened.

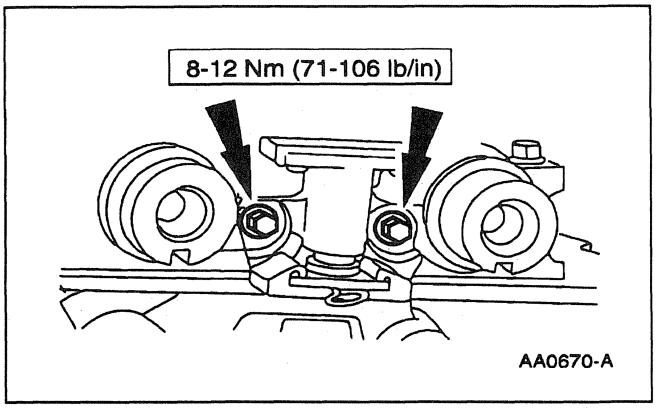

1. Install the tensioner and tighten the bolt.

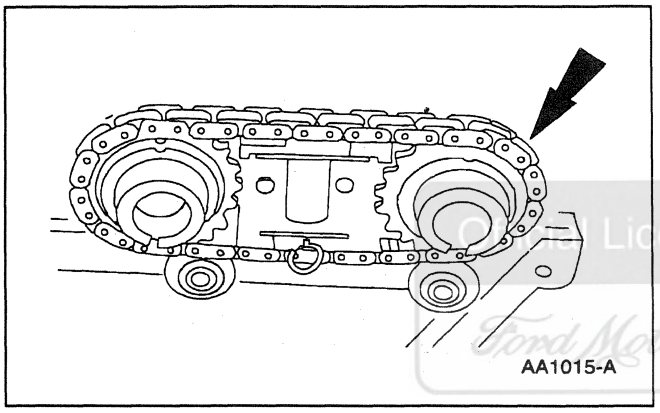

2. Install the timing chain and the camshaft sprocket as an assembly.

Ford Licensed Product
Ford Motor Company

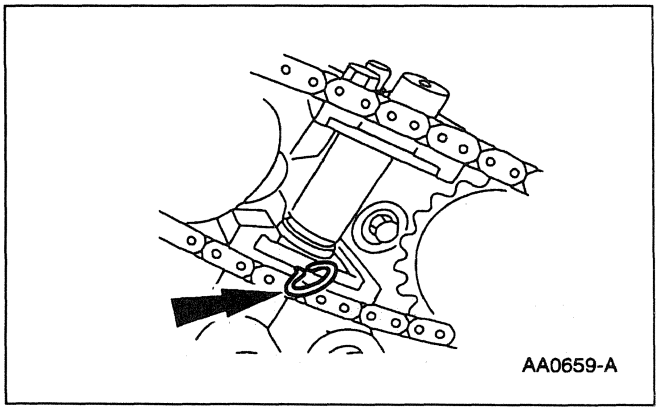

3. Remove the locking pin from the tensioner.

IN-VEHICLE REPAIR (Continued)

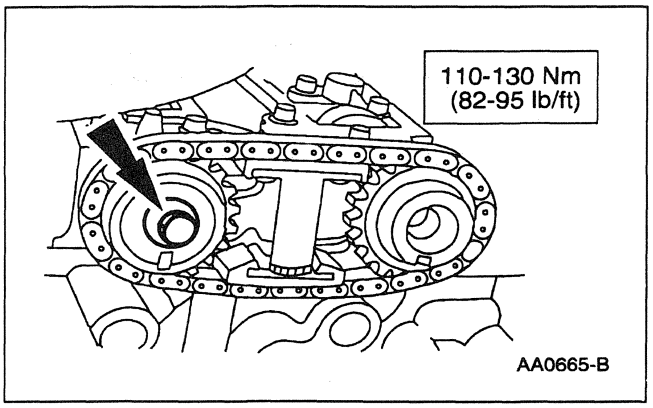

4. Install the camshaft sprocket spacer, washer and the bolt.

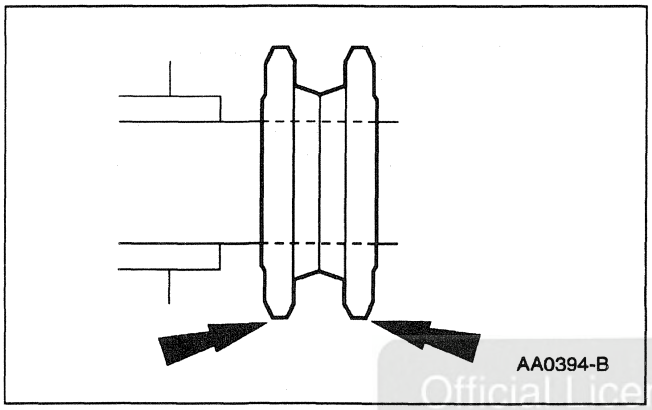

5. Check the RH timing chain gear is in front of the LH timing chain gear with the hubs facing each other.

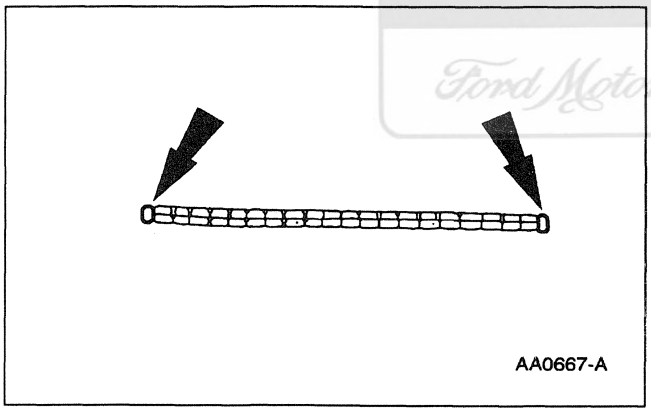

6. **NOTE:** If colored links of timing chain are not visible, split both chains in half and mark the two opposing links as shown.

   Install the primary chain on the primary camshaft sprocket. Make sure marked link of timing chain lines up with timing mark of the camshaft sprocket.

7. Check that the copper links on the timing chain are lined up with corresponding dots on the timing chain gears.

Official Licensed Product
Ford Motor Company

IN-VEHICLE REPAIR (Continued)

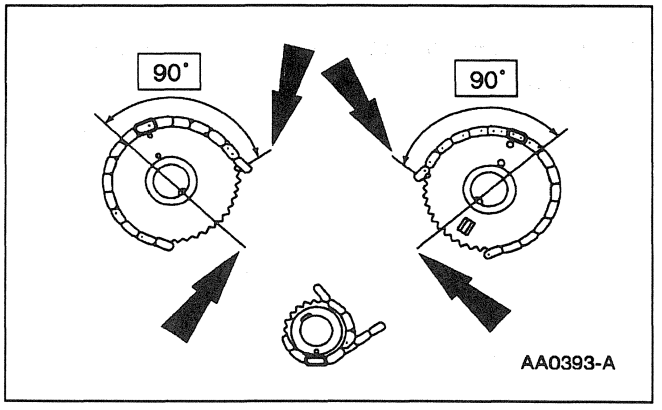

8. **NOTE:** Make sure that the keyway on the camshafts sprockets is 90° from the cam cover surface.

   Install the primary timing chain on the crankshaft sprocket.

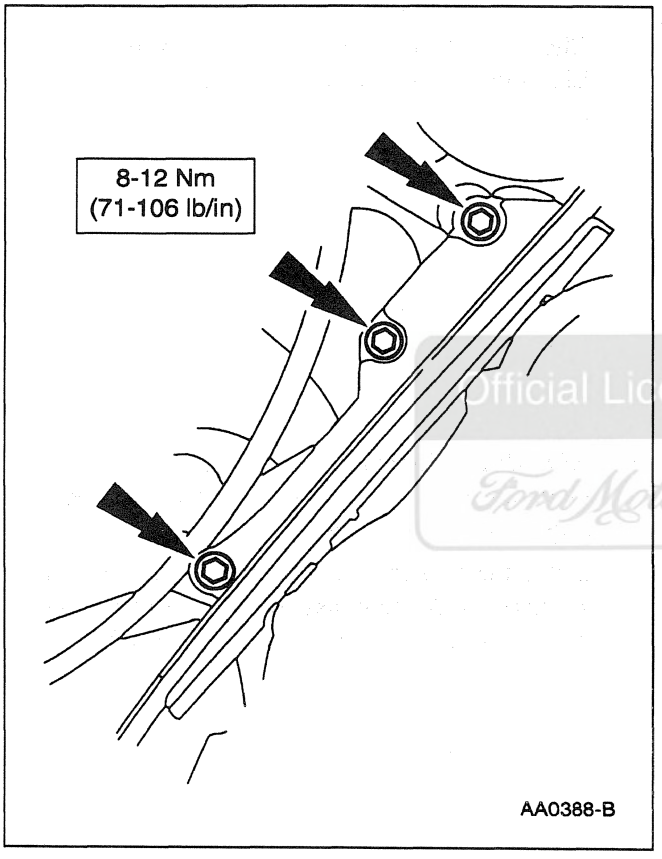

9. **NOTE:** Two timing chain guides to-cylinder head bolts are longer than the bolt to the cylinder block.

   If removed, install the RH and the LH timing chain guides (6K297) and tighten the bolts.

Official Licensed Product
Ford Motor Company

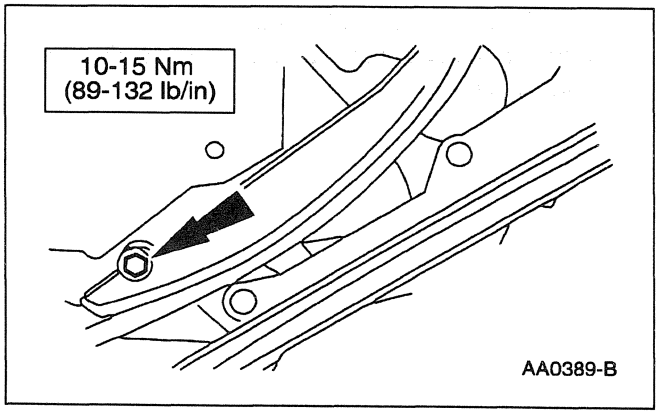

10. Install the RH and the LH timing chain tensioner arms and tighten the bolts.

IN-VEHICLE REPAIR (Continued)

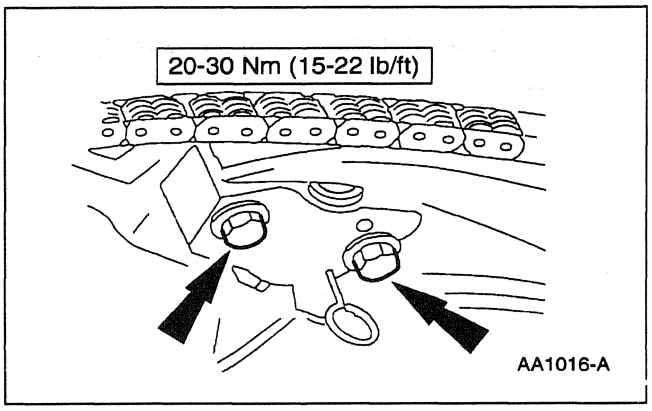

11. **NOTE:** Make sure that the lock pins are still installed in the timing chain tensioner.

    Install the RH and the LH timing chain tensioners and tighten the bolts.

12. Remove the lock pins from the primary timing chain tensioner and make sure all timing marks are aligned.

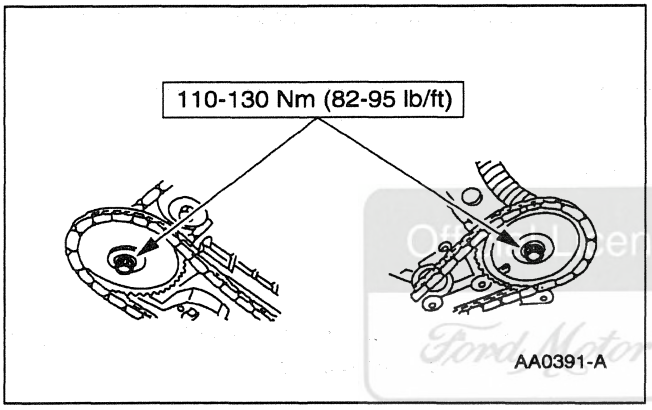

13. Tighten the bolts.

Ford Motor Company

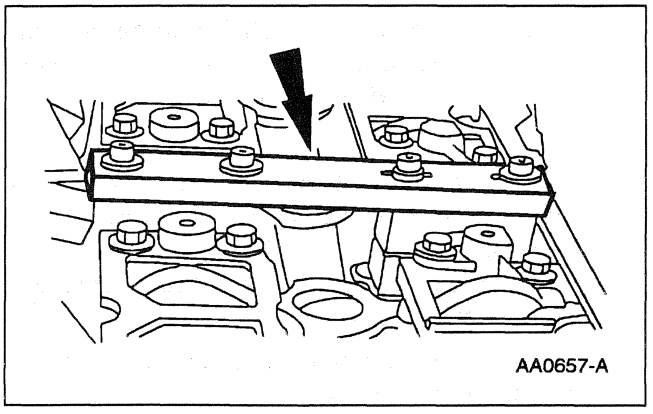

14. Remove the Camshaft Holding Tool from the camshaft.

IN-VEHICLE REPAIR (Continued)

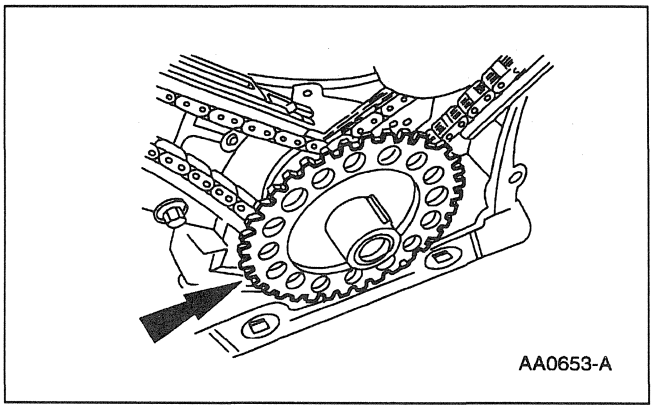

15. Install the crankshaft position sensor (CKP) pulse wheel.

16. Install the engine front cover; refer to Engine Front Cover in this section.

17. Start the engine. Check for leaks and proper operation.

Camshafts

Removal

Official Licensed Product
Ford Motor Company

1. Remove engine front cover (6019); refer to Engine Front Cover in this section.

2. Remove the valve cover (6582) from the side that is being serviced; refer to Valve Cover—RH and Valve Cover—LH in this section.

3. ⚠ **CAUTION: At no time, when the timing chains are removed and the cylinder heads (6049) are installed may the crankshaft or camshaft be rotated. Severe piston and valve damage will occur.**

   Remove the camshaft roller followers; refer to Roller Followers in this section.

4. Remove the timing chain; refer to Camshaft Timing Chains—Timing Sprockets, Tensioners and Guides in this section.

IN-VEHICLE REPAIR (Continued)

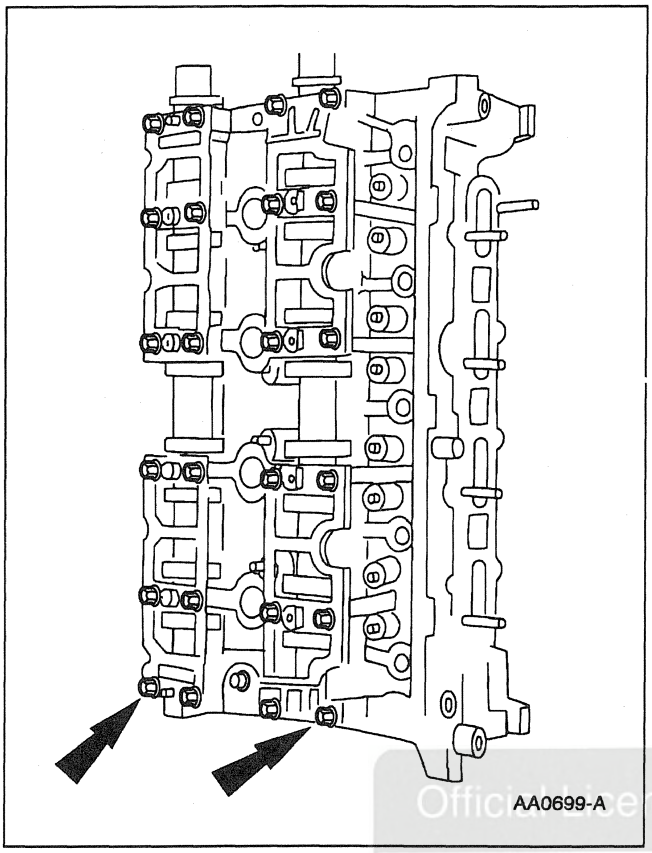

5. Remove the 25 bolts and remove the camshaft cap assembly.

Official Licensed Product
Ford Motor Company®

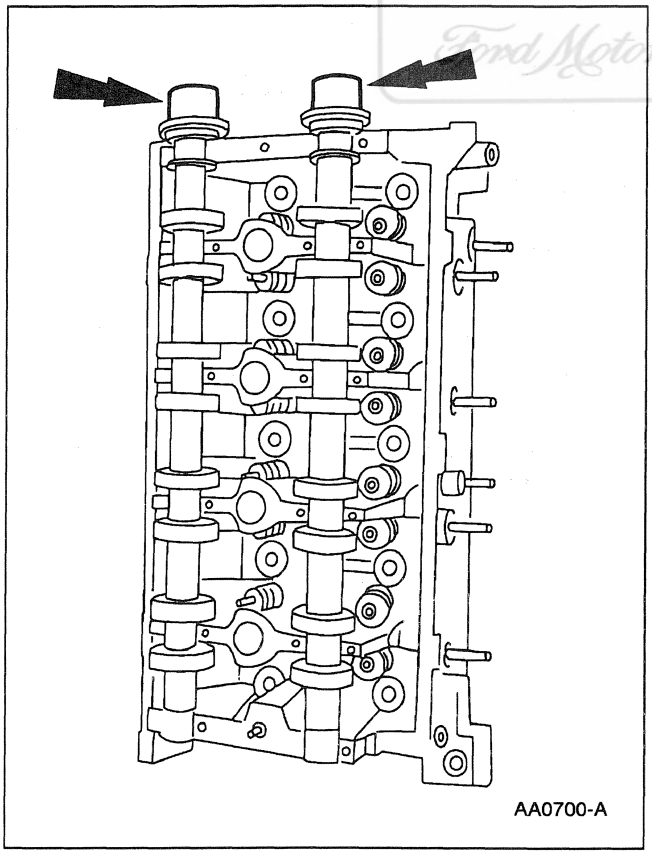

6. Remove the camshaft (6250).

IN-VEHICLE REPAIR (Continued)

Installation

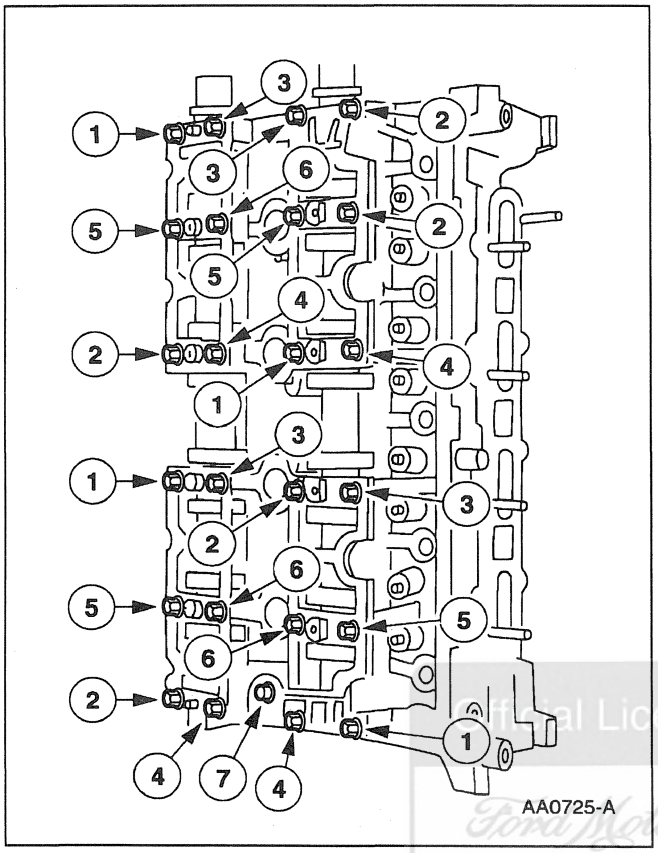

1. Follow the removal procedure in reverse order.

Official Licensed Product
Ford Motor Company

Water Pump

Removal

1. Drain the engine cooling system; refer to Section 303-03.

2. Remove the drive belt (8620); refer to Section 303-05.

IN-VEHICLE REPAIR (Continued)

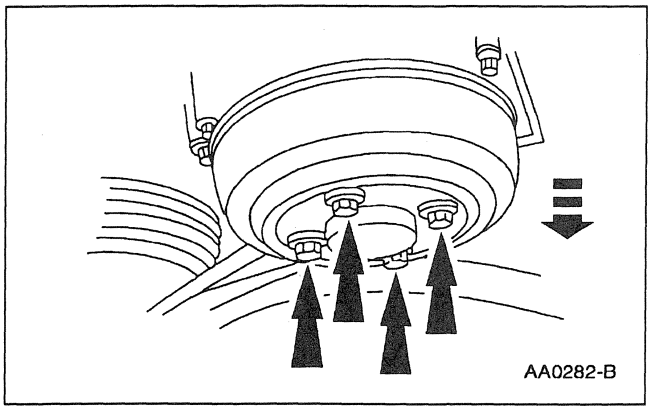

3. Remove the bolts and remove the water pump pulley (8509).

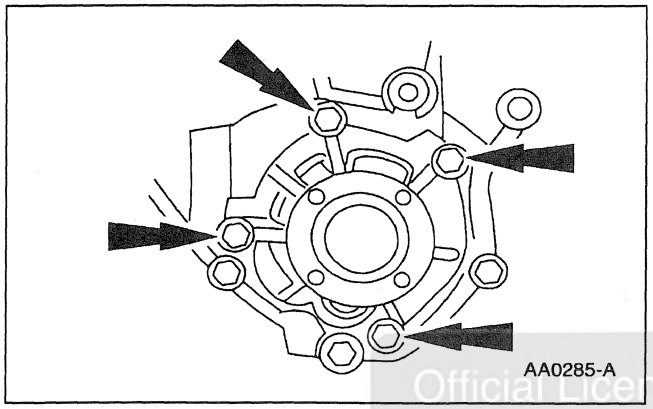

4. Remove the bolts and remove the water pump (8501).
   - Clean and inspect the mating surfaces.

Official Licensed Product
Ford Motor Company

Installation

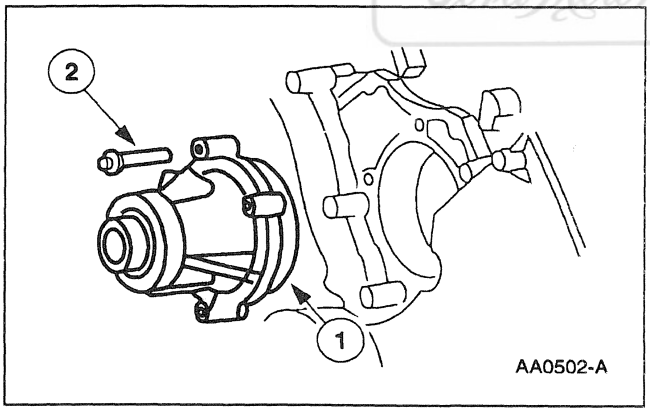

1. Install the water pump.
   1 Lubricate and install the O-ring seal.
      - Use Ford Premium Engine Coolant E2FZ-19549-AA (in Oregon, F5FZ-19549-CC, in Canada, CXC-8-B) or equivalent meeting Ford specification ESE-M97B44-A.
   2 Loosely install the four bolts.

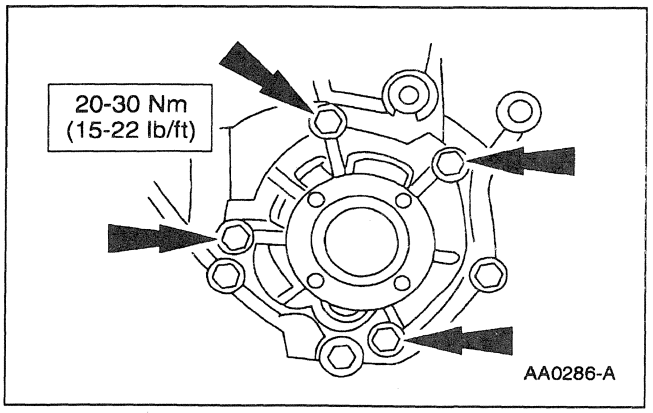

2. Install the water pump and tighten the bolts.

IN-VEHICLE REPAIR (Continued)

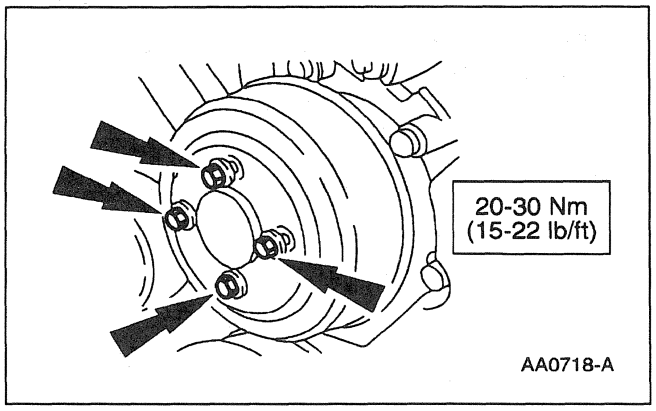

3. Install the water water pump pulley and tighten the bolts.

4. Install the drive belt; refer to Section 303-05.

5. Fill the engine cooling system; refer to Section 303-03.

Exhaust Manifold —RH Side

Official Licensed Product
Ford Motor Company

1. Disconnect the RH heated oxygen sensors (HO2S)(9F472); refer to Section 303-14.

2. Remove the dual converter Y pipe (5F250); refer to Section 309-00.

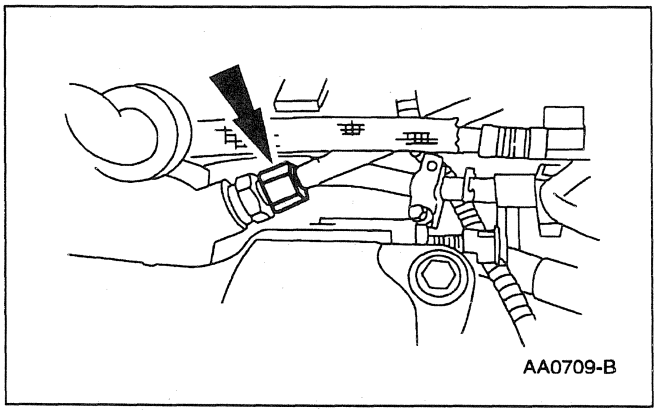

3. Disconnect the exhaust air tube from the exhaust manifold.

IN-VEHICLE REPAIR (Continued)

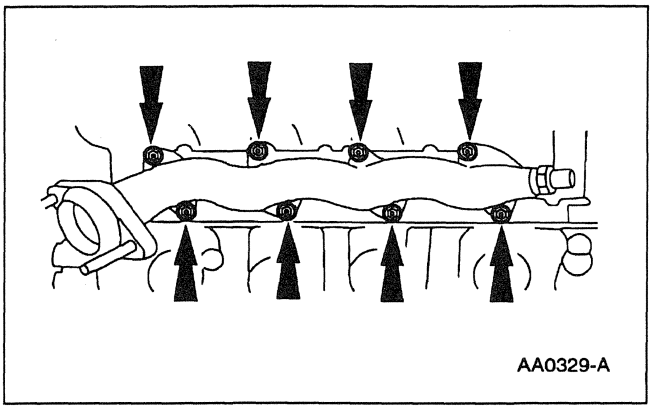

AA0329-A

4. Remove the nuts and remove the exhaust manifold.

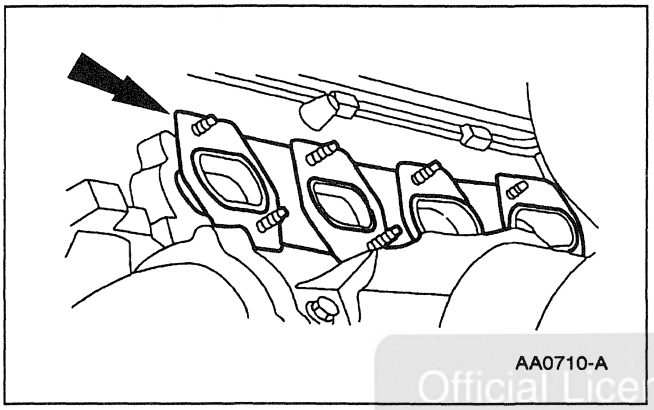

AA0710-A

5. Remove and discard the exhaust manifold gasket (9448).

Official Licensed Product
Ford Motor Company

IN-VEHICLE REPAIR (Continued)

Installation

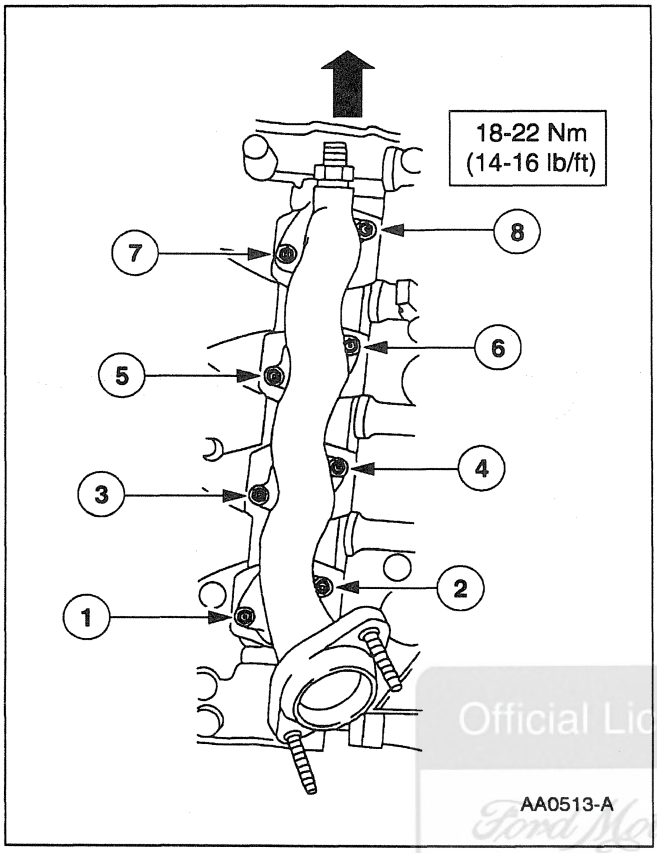

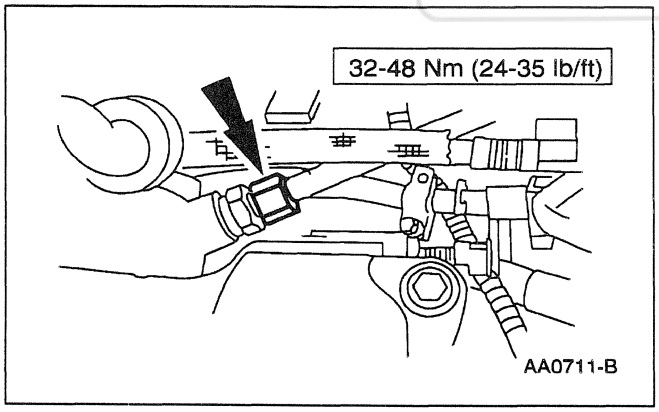

1. Follow the removal procedure in reverse order.

Official Licensed Product
Ford Motor Company

Exhaust Manifold —LH Side

1. Raise and support the vehicle; refer to Section 100-02.

2. Disconnect the LH heated oxygen sensors (HO2S)(9F472); refer to Section 303-14.

IN-VEHICLE REPAIR (Continued)

3. Remove the dual converter Y pipe (5F250); refer to Section 309-00.

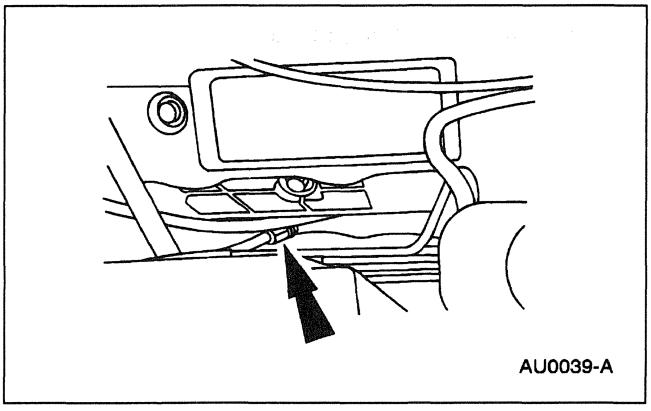

4. Disconnect the exhaust air tube from the exhaust manifold.

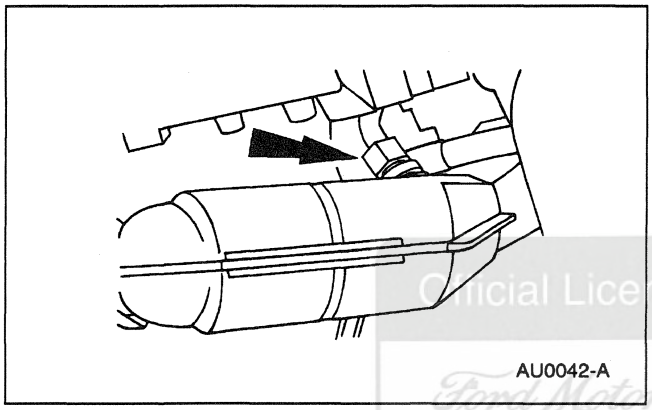

5. Disconnect the EGR valve to exhaust manifold tube (9D477) from the LH converter.

Official Licensed Product
Ford Motor Company

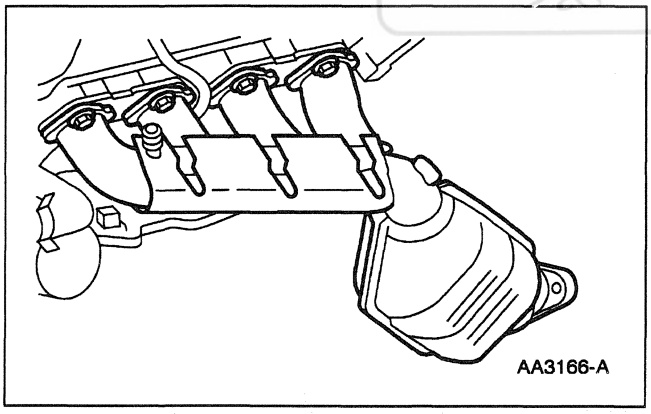

6. Remove the nuts and remove the exhaust manifold.

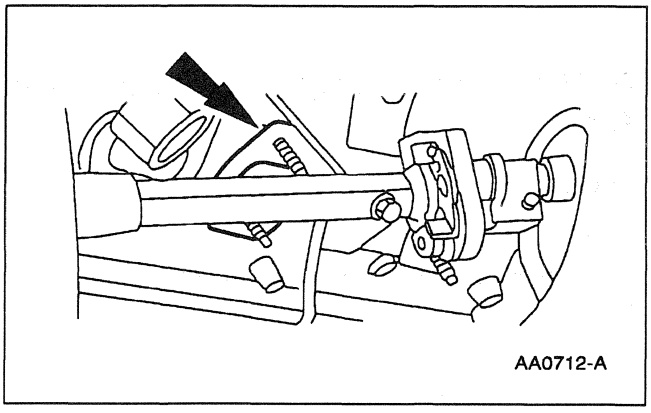

7. Remove and discard the front and rear exhaust manifold gasket (9448).

IN-VEHICLE REPAIR (Continued)

Installation

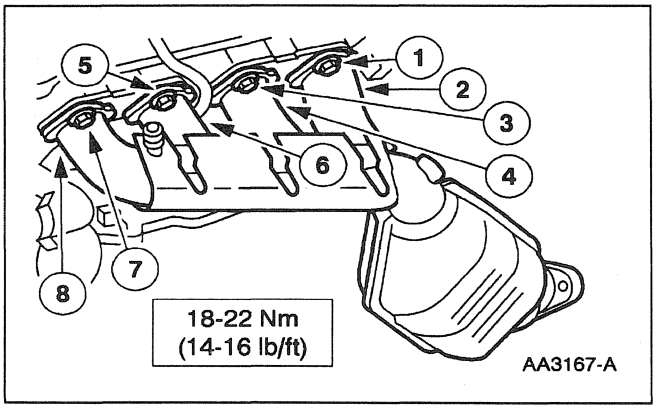

1. Follow the removal procedure in reverse order.

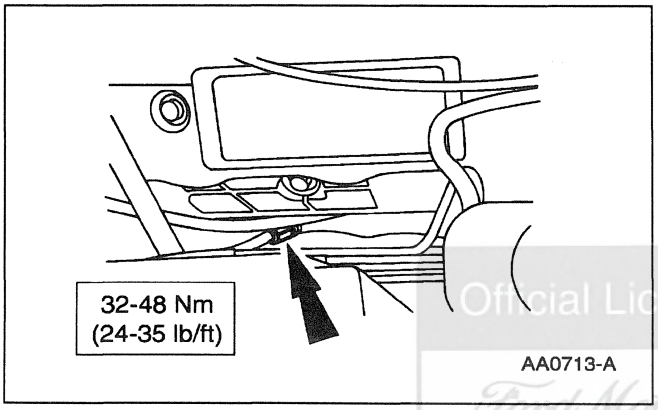

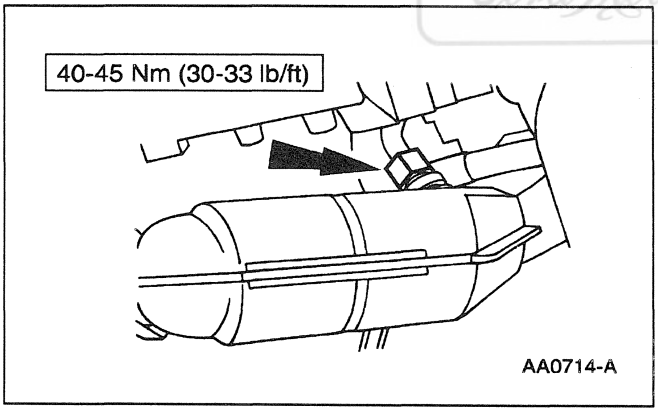

Official Licensed Product
Ford Motor Company

Oil Pan and Oil Pump Screen Cover and Tube

Removal

1. Disconnect the battery ground cable (14301).

IN-VEHICLE REPAIR (Continued)

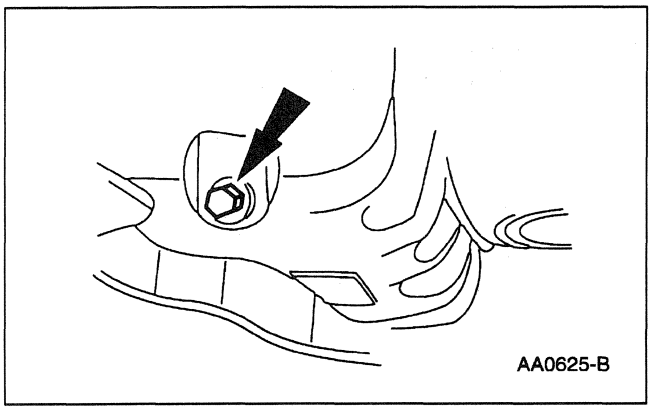

2. Remove the oil pan drain plug (6730) and drain the engine oil.

3. Lower the front front sub-frame (5C145); refer to Section 502-02.

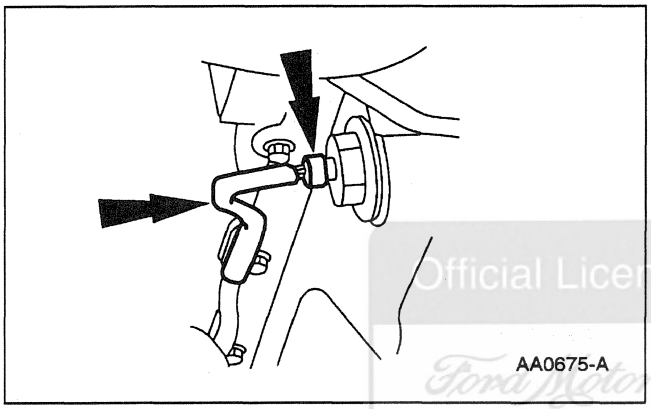

4. Disconnect the sensor wiring from the low oil level sensor and the oil pan rail.

Official Licensed Product
Ford Motor Company

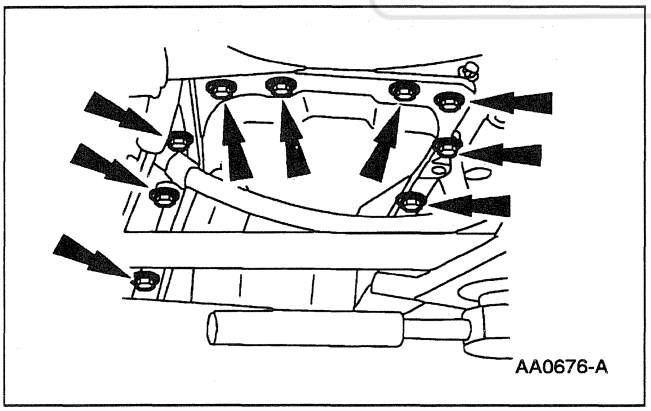

5. Remove the 16 bolts and remove the oil pan (6675).

IN-VEHICLE REPAIR (Continued)

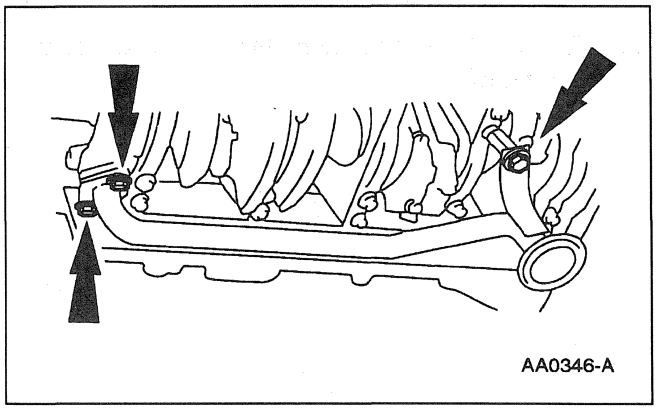

6. Remove the bolts from the oil pump screen and cover. Remove the oil pump screen cover and tube (6622).

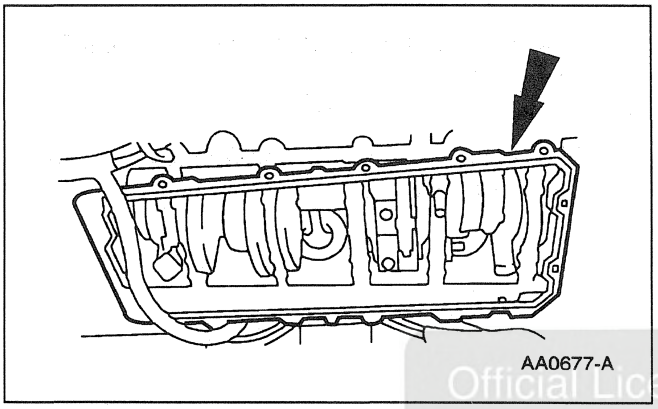

7. Remove the oil pan gasket (6710).

Official Licensed Product
Ford Motor Company

Installation

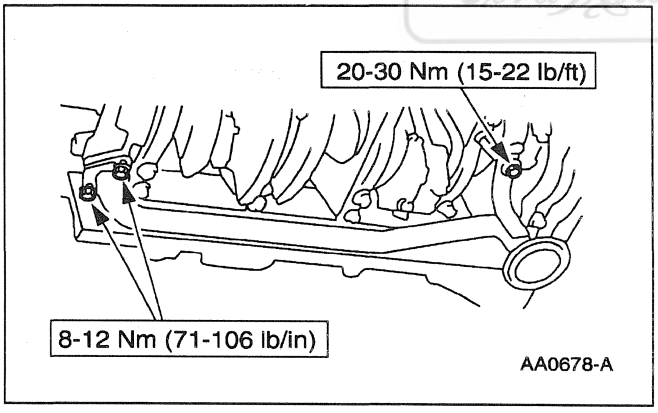

1. Install the oil pump screen and cover and tighten bolts.

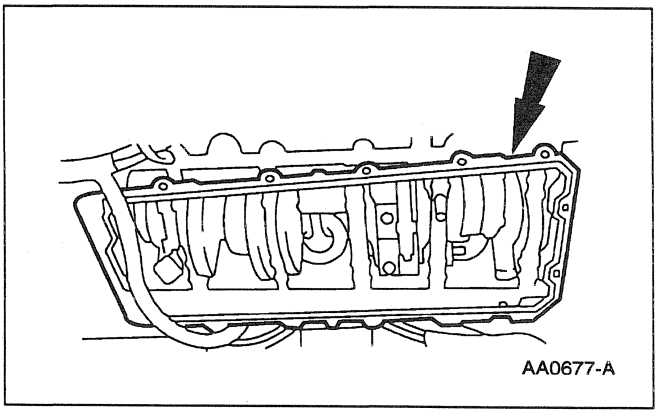

2. Install the oil pan gasket.
   - Use RTV on parting lines (4 places).

IN-VEHICLE REPAIR (Continued)

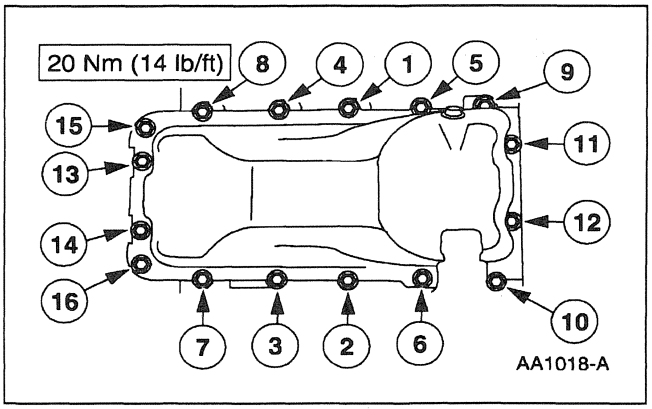

3. **NOTE:** Tighten the bolts in two steps.
   Install the oil pan and tighten the bolts in two steps.

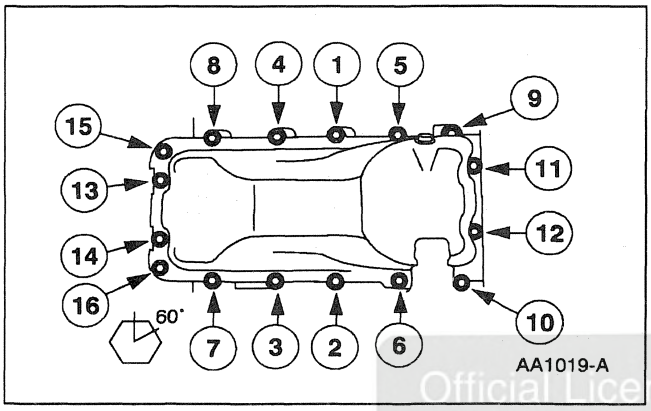

4. Tighten the bolts.

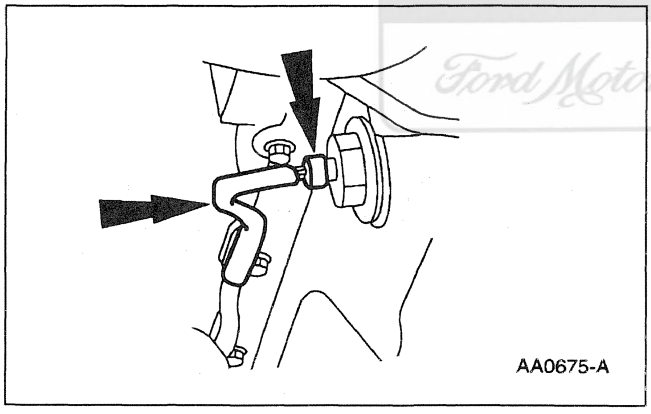

5. Connect the sensor wiring to the low oil level sensor and to the oil pan rail.

6. Install the front sub-frame; refer to Section 502-02.

Official Licensed Product
Ford Motor Company

IN-VEHICLE REPAIR (Continued)

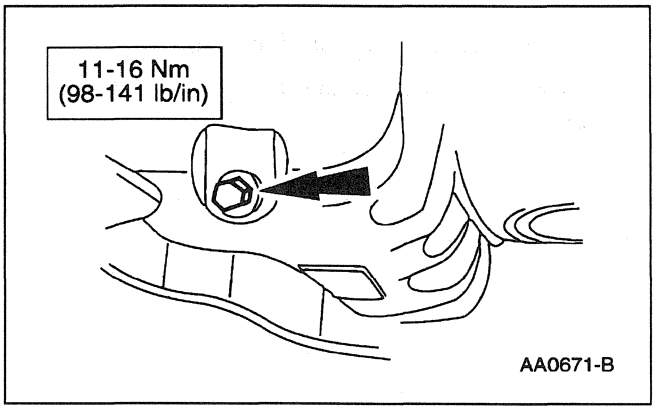

7. Install and tighten the oil pan drain plug.

8. Connect the battery ground cable.

9. Fill the engine with oil.
   - Use clean engine oil meeting Ford specification WSS-M2C153-G.

Oil Pump

Removal

Official Licensed Product
Ford Motor Company

1. Remove the engine front cover (6019); refer to Engine Front Cover in this section.

2. Remove the oil pan (6675) and the oil pump screen cover and tube (6622); refer to Oil Pan and Oil Pump Screen Cover and Tube in this section.

3. Remove the primary timing chain only; refer to Camshaft Timing Chains—Timing Sprockets, Tensioners and Guides in this section.

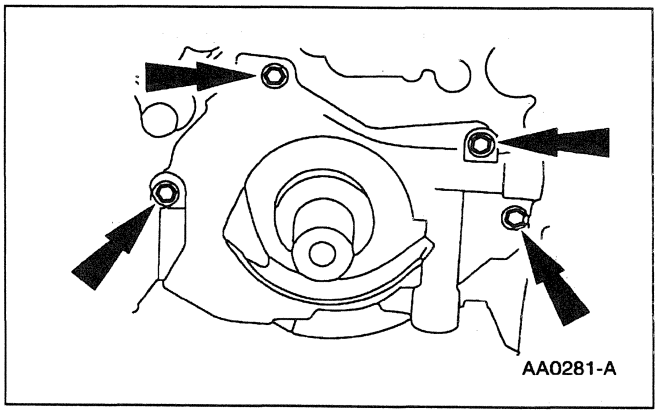

4. Remove the bolts and remove the oil pump (6600).

IN-VEHICLE REPAIR (Continued)

Installation

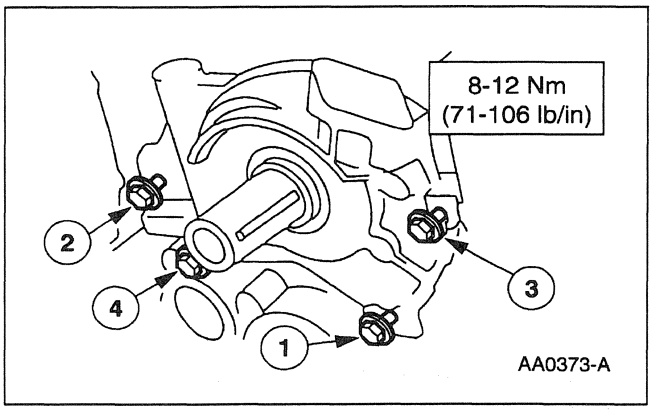

1. Follow the removal procedure in reverse order.

Connecting Rod Bearings

Removal

Official Licensed Ford Motor Company

1. Remove the oil pan and the oil pump screen cover and tube; refer to Oil Pan and Oil Pump Screen Cover and Tube in this section.

2. Remove the oil pump screen cover and tube spacer from the main bearing cap stud.

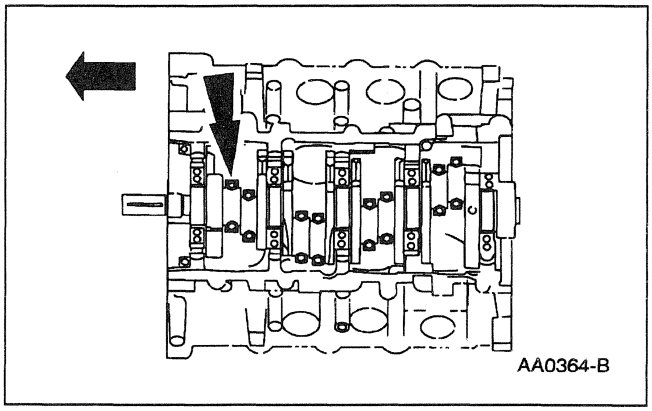

3. **NOTE:** Connecting rod cap and connecting rod bearings should be numbered to make sure they are assembled in their original positions.

   Rotate the crankshaft until the crankshaft journal is at lowest point and remove the bolts and the connecting rod caps.

IN-VEHICLE REPAIR (Continued)

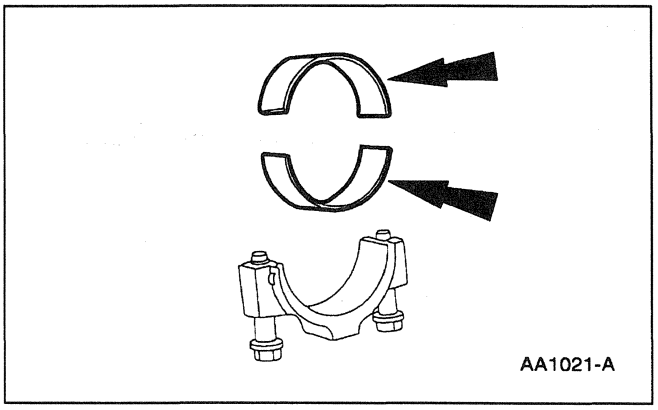

4. Remove rod bearing and inspect.
   - Replace as necessary.

5. Discard the connecting rod cap bolts.

Installation

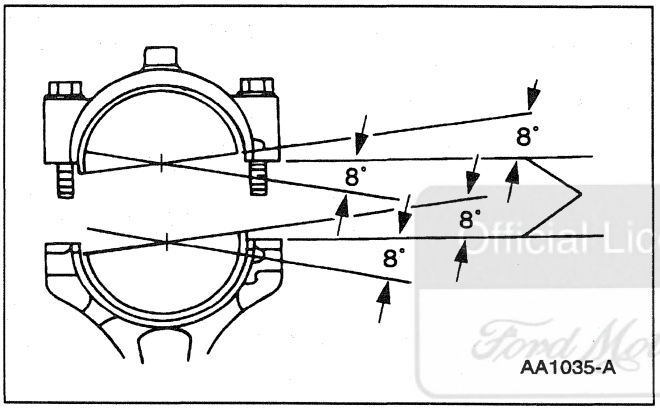

1. **NOTE:** Alignment of the bearing mating surface must not exceed the specified limit from the parting face of the connecting rod cap.

   Position and install the bearings and caps.

Official Licensed Product
Ford Motor Company

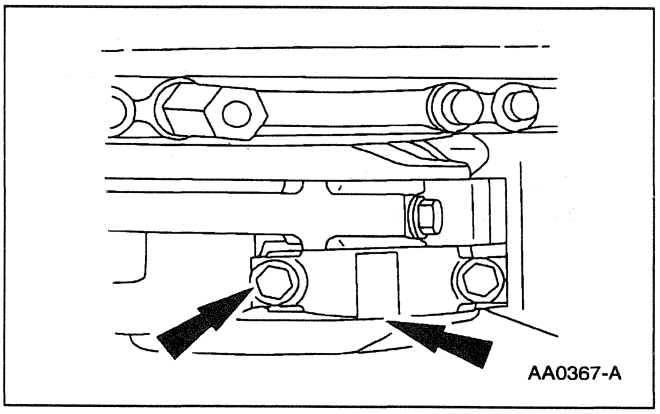

2. Position the connecting rod caps and loosely install the new bolts.

IN-VEHICLE REPAIR (Continued)

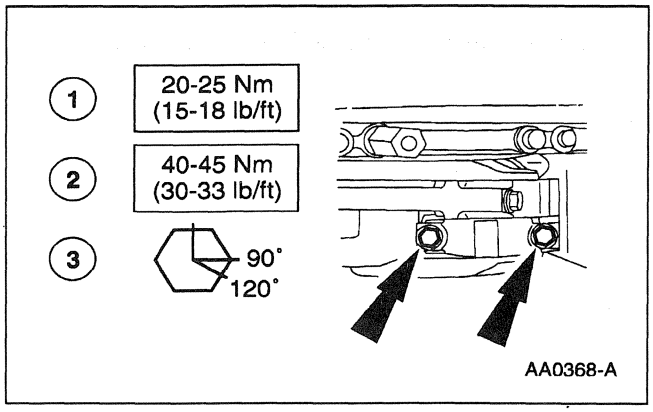

3. Tighten the bolts in the sequence shown.

4. Rotate the crankshaft and repeat Steps 1, 2 and 3 until all the crankshaft journals are complete.

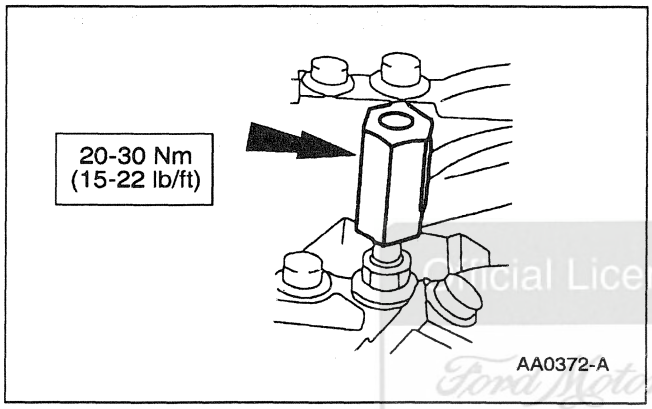

5. Install and tighten the oil pump screen and cover spacer.

Official Licensed Product
Ford Motor Company

6. Install the oil pump screen cover and tube (6622) and the oil pan (6675); refer to Oil Pan and Oil Pump Screen Cover and Tube in this section.

Flywheel

Removal

1. Remove the transmission; refer to Section 307-01.

IN-VEHICLE REPAIR (Continued)

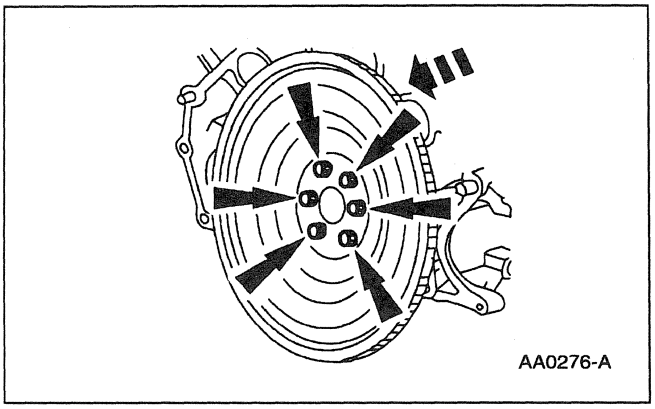

2. Remove the bolts and the flywheel (6375).

Installation

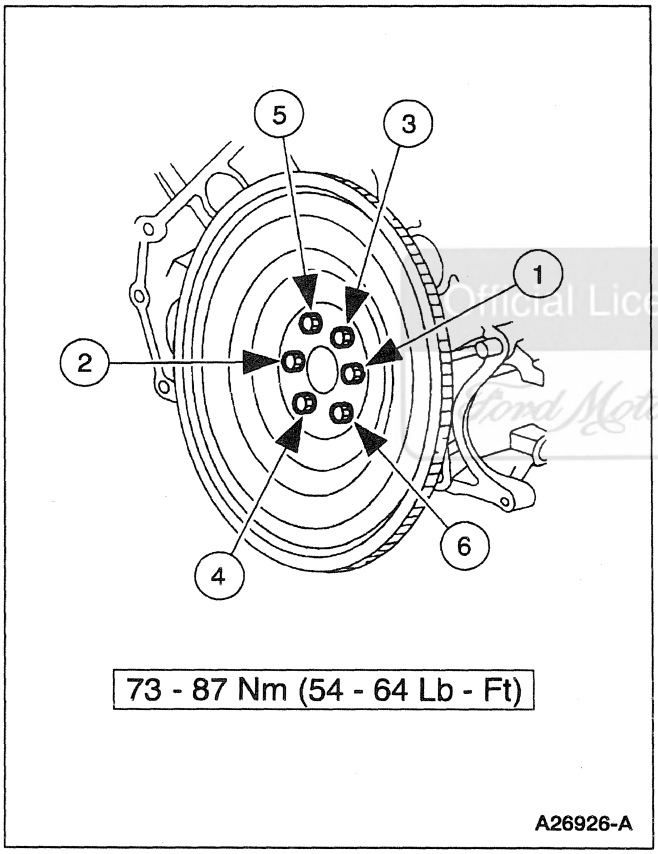

1. Follow the removal procedure in reverse order.

Official Licensed Product
Ford Motor Company

IN-VEHICLE REPAIR (Continued)

Crankshaft Rear Oil Seal and Slinger

Special Tool(s)

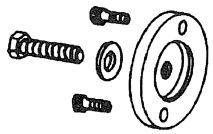 ST1480-A	Rear Crankshaft Seal Adapter 303-518 (T95P-6701-DH)
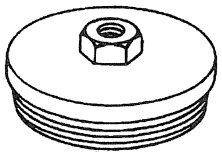 ST1382-A	Rear Crankshaft Seal Remover 303-519 (T95P-6701-EH)
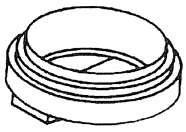 ST1479-A	Rear Crankshaft Seal Replacer 303-516 (T95P-6701-BH)

(Continued)

Special Tool(s)

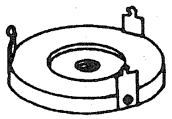 ST1481-A	Rear Crankshaft Slinger Remover 303-514 (T95P-6701-AH)
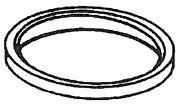 ST1482-A	Rear Crankshaft Slinger Replacer 303-517 (T95P-6701-CH)
ST1185-A	Slide Hammer 100-001 (T50T-100-A)

Official Licensed Product
Ford Motor Company

Removal

1. Remove the transmission; refer to Section 307-01.
2. Remove the flywheel (6375); refer to Flywheel in this section.
3. Use the Rear Crankshaft Slinger Remover and the Slide Hammer to remove the crankshaft oil slinger (6310).

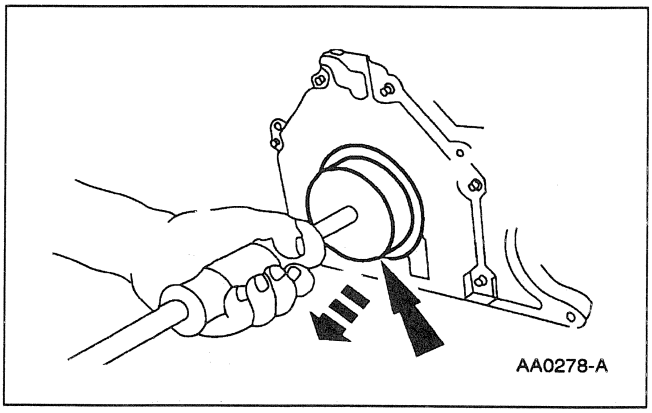
AA0278-A

IN-VEHICLE REPAIR (Continued)

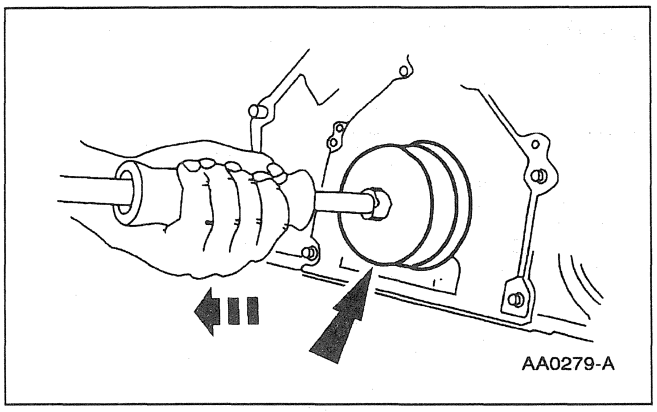

4. Use the Rear Crankshaft Seal Remover and the Slide Hammer to remove the crankshaft rear oil seal (6701).

Installation

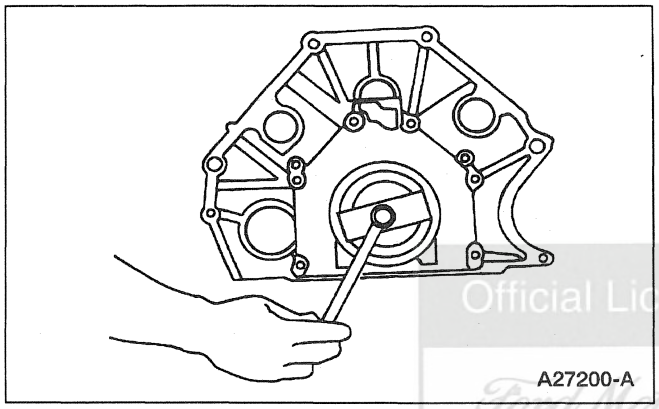

1. Use the Rear Crankshaft Seal Replacer and the Rear Crankshaft Seal Adapter to install the crankshaft rear oil seal.

Official Licensed Product
Ford Motor Company

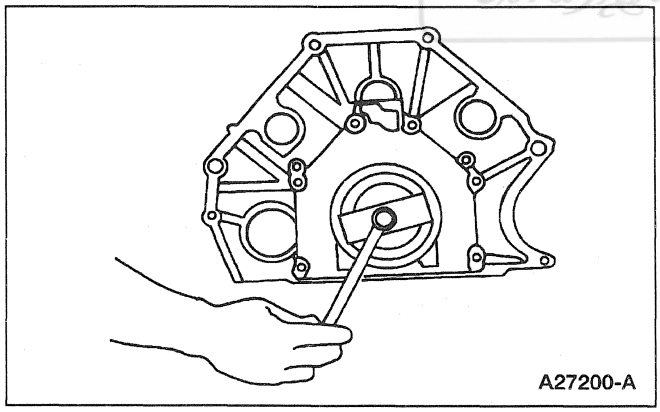

2. With the Rear Crankshaft Seal Adapter still installed, use the Rear Crankshaft Slinger Replacer and the Rear Crankshaft Seal Replacer to install the crankshaft oil slinger.

3. Install the flywheel; refer to Flywheel in this section.

4. Install the transmission; refer to Section 307-01.

IN-VEHICLE REPAIR (Continued)

Oil Filter Adapter and Oil Pressure Sensor

1. Raise and support the vehicle; refer to Section 100-02.

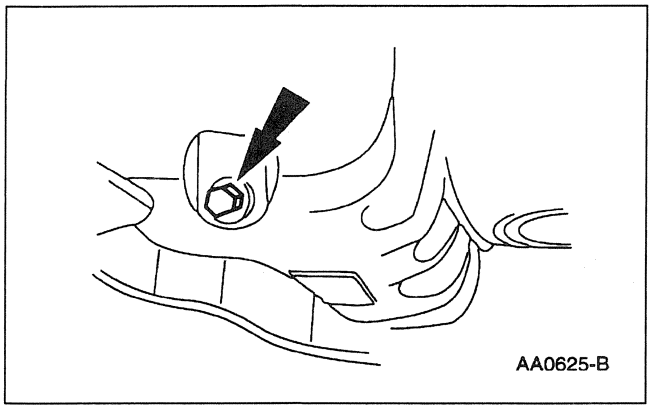

2. Remove the oil pan drain plug (6730) and drain the engine oil.

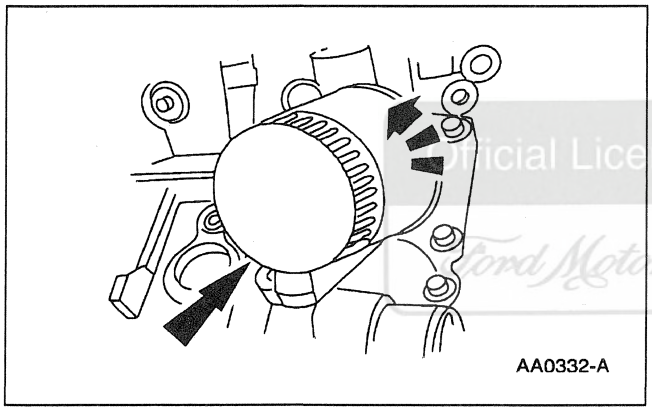

3. Remove the oil bypass filter (6714).

Official Licensed Product
Ford Motor Company

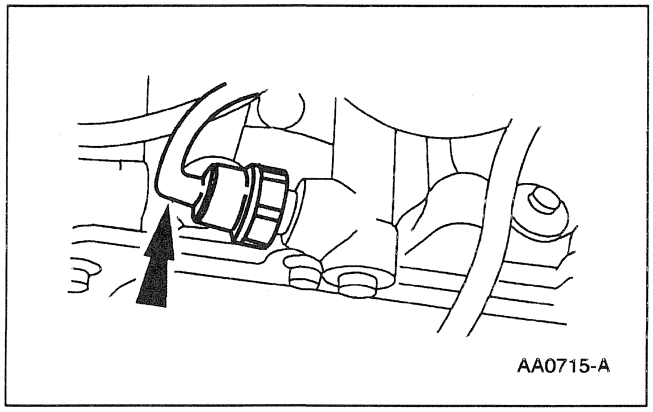

4. Disconnect the oil pressure sensor wiring.

IN-VEHICLE REPAIR (Continued)

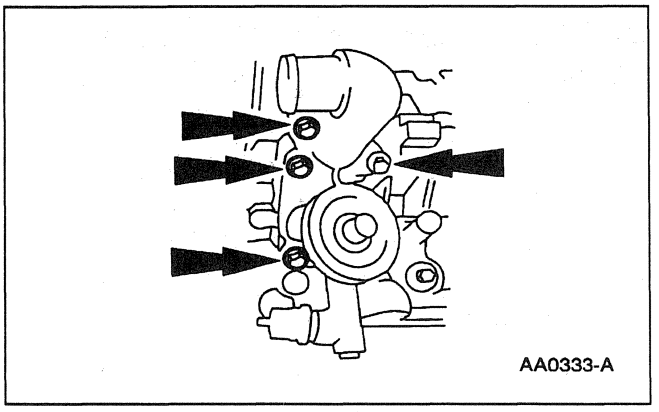

5. Remove the bolts and remove the oil filter adapter (6881).

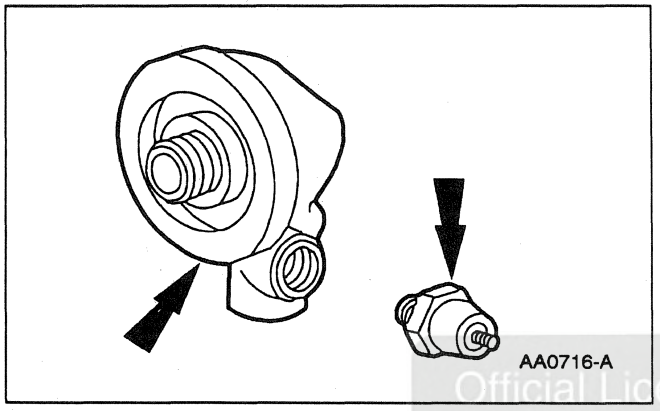

6. If necessary, remove the oil pressure sensor (9278) from the oil filter adapter.

Official Licensed Product
Ford Motor Company

Installation

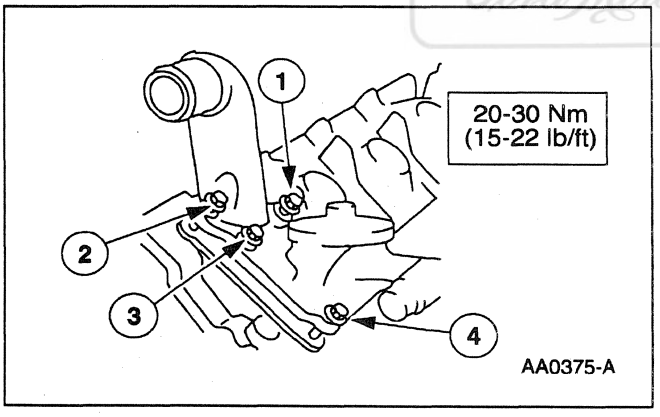

1. Follow the removal procedure in reverse order.

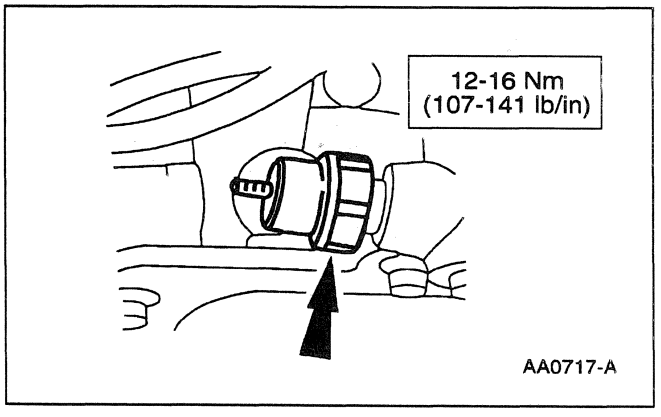

IN-VEHICLE REPAIR (Continued)

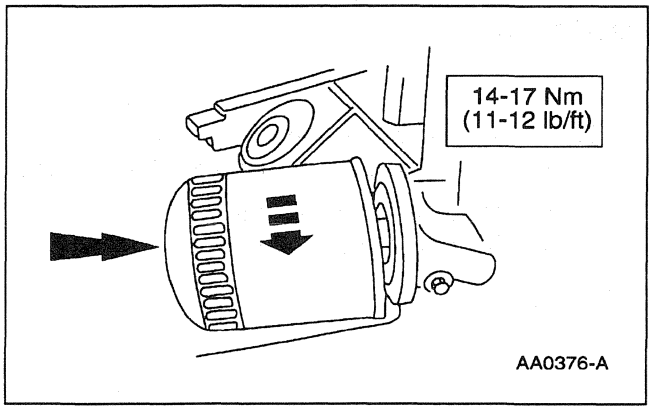

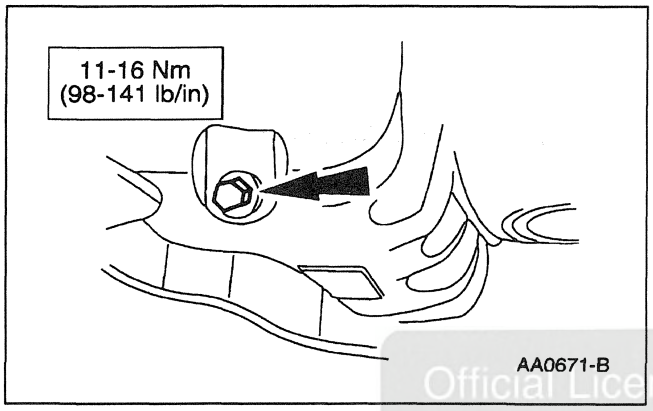

Official Licensed Product
Ford Motor Company

Oil Level Indicator Tube

1. Remove the LH front engine support insulator (6038); refer to Section 502-02.

2. Remove the nut from the LH valve cover (6582) and remove the oil level dipstick (6750) and the oil level indicator tube (6754).

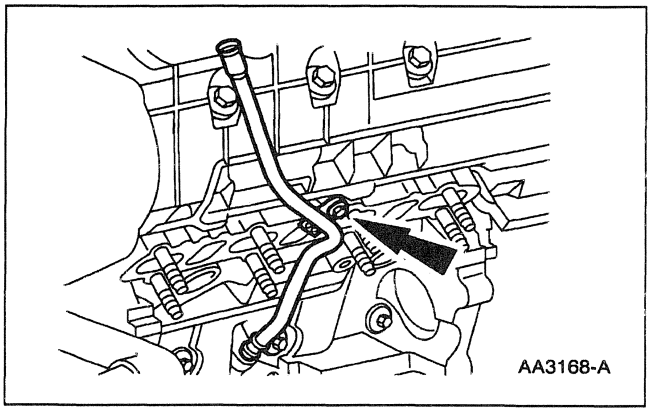

IN-VEHICLE REPAIR (Continued)

Installation

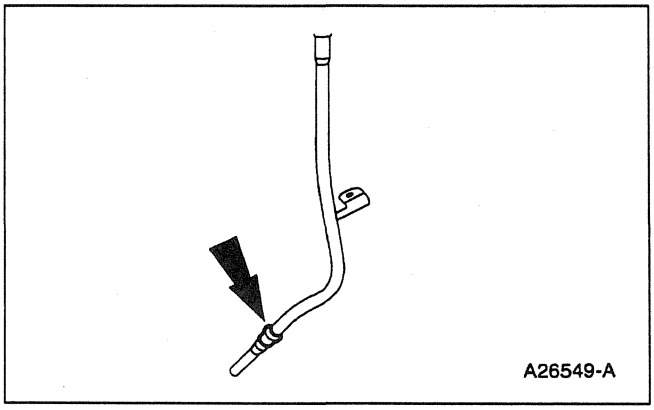

1. Lubricate the O-ring seal on the oil level indicator tube and position in the hole on the cylinder block.
   - Use clean engine oil meeting Ford specification WSS-M2C153-G.

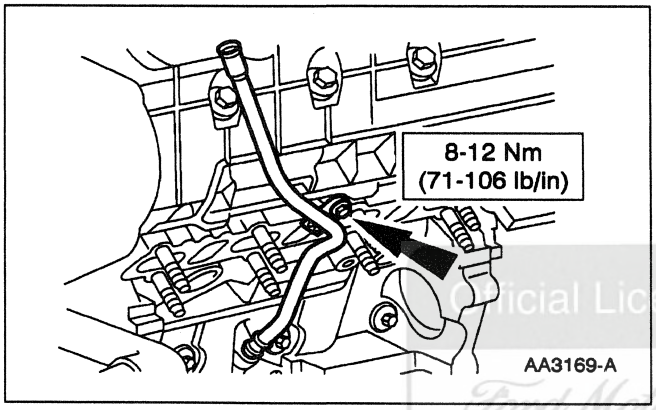

2. Install the oil level indicator tube.

Official Licensed Product
Ford Motor Company

REMOVAL AND INSTALLATION

Engine

Special Tool(s)

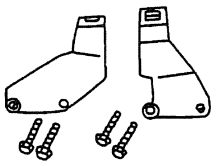 ST1701-A	Engine Lifting Set 303-DS086 (014-00340) or equivalent
ST1682-A	Powertrain Lift 014-00765 or equivalent
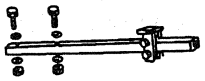 ST1702-A	Transmission Support Bracket 307-D005 (014-00341) or equivalent

Official Licensed Product
Ford Motor Company

Removal

1. Remove the battery (10653).
2. Remove air cleaner outlet tube (9B659); refer to Section 303-03.
3. Drain engine cooling system; refer to Section 303-03.
4. Remove the windshield wiper (17500); refer to Section 501-16.
5. Recover the air conditioning system; refer to Section 412-00.

REMOVAL AND INSTALLATION (Continued)

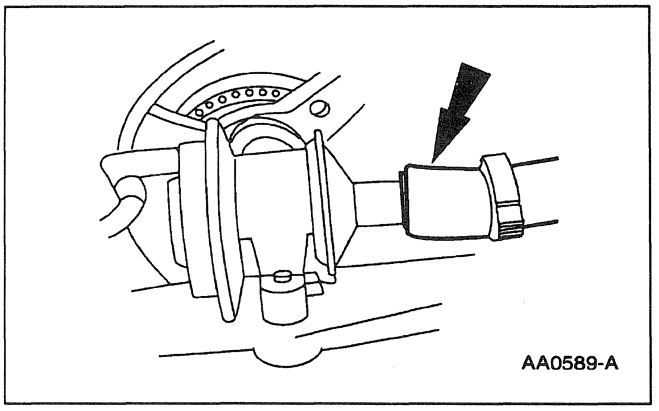

6. Disconnect the secondary air injection valve inlet tube from the secondary air injection pump outlet hose.

7. Remove the fan motor (8C607); refer to Section 303-03.

8. Relieve the fuel system pressure; refer to Section 310-00, and disconnect the fuel tubes; refer to Section 310-01.

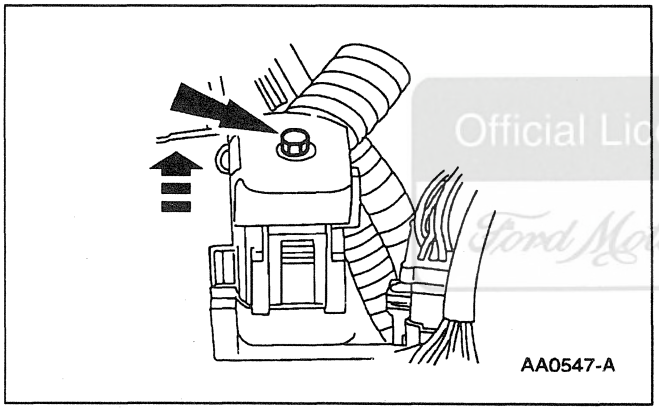

9. Disconnect the 42-pin connector at the rear of the LH valve cover.

Official Licensed Product
Ford Motor Company

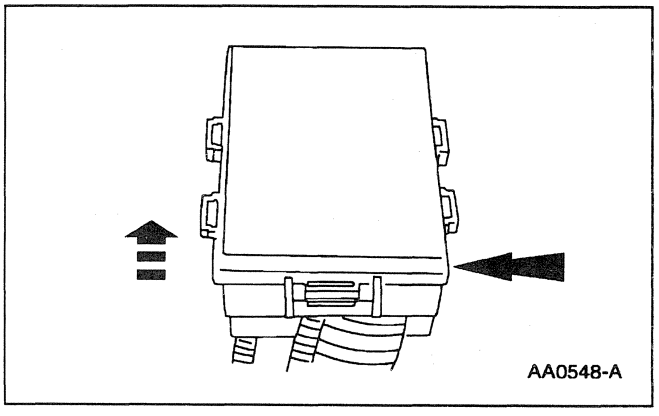

10. Position the power distribution box out of the way.

REMOVAL AND INSTALLATION (Continued)

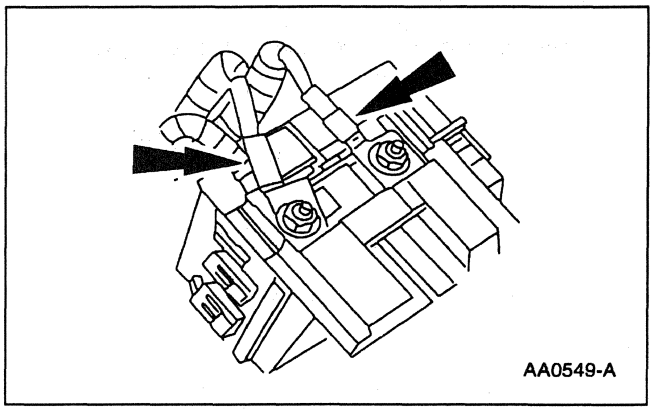

11. Disconnect the generator wires from the power distribution box.

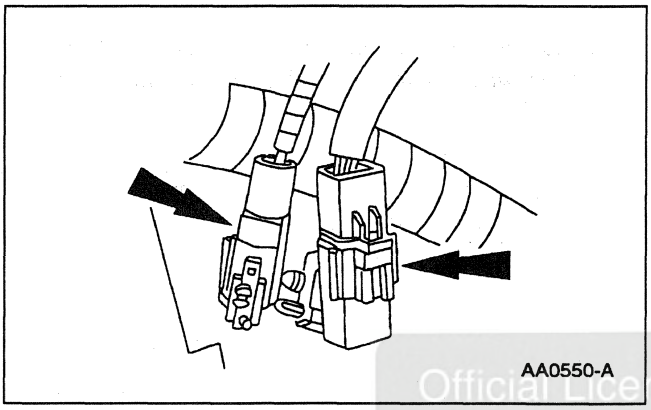

12. Disconnect the headlamp dash panel junction wire (14290) and the generator wire connectors.

Official Licensed Product
Ford Motor Company

13. Remove the accelerator and cruise control cables; refer to Section 310-02.

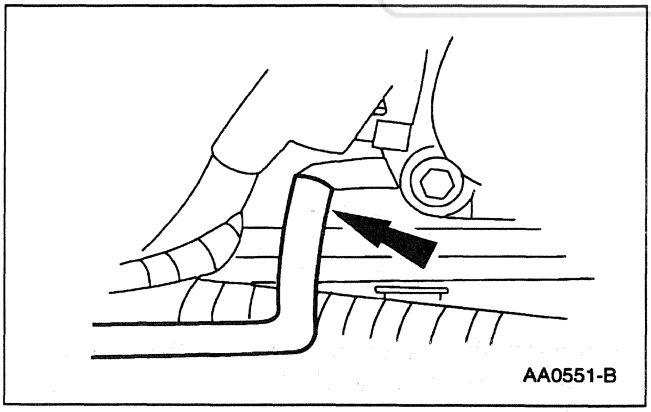

14. Disconnect the evaporative emission hose (9G297) at the upper intake manifold.

REMOVAL AND INSTALLATION (Continued)

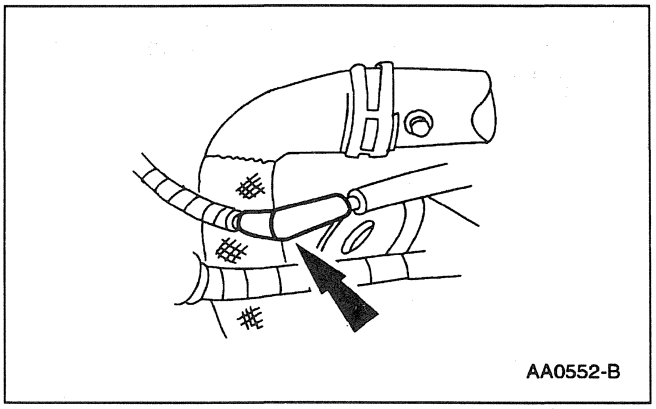

15. Disconnect the chassis vacuum supply hose.

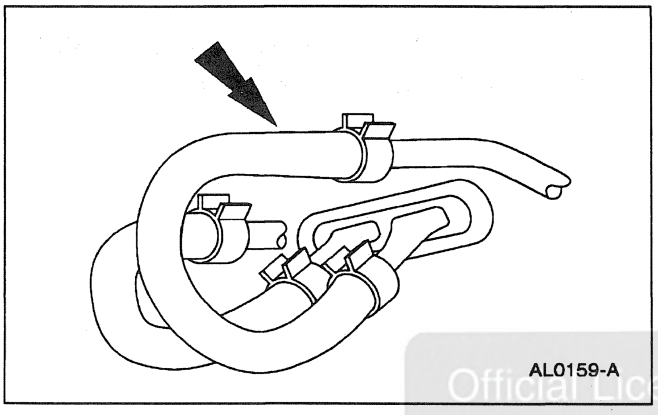

16. Disconnect the heater water hose (18472) and the heater water hose behind the RH cylinder head (6049).

Official Licensed Product
Ford Motor Company

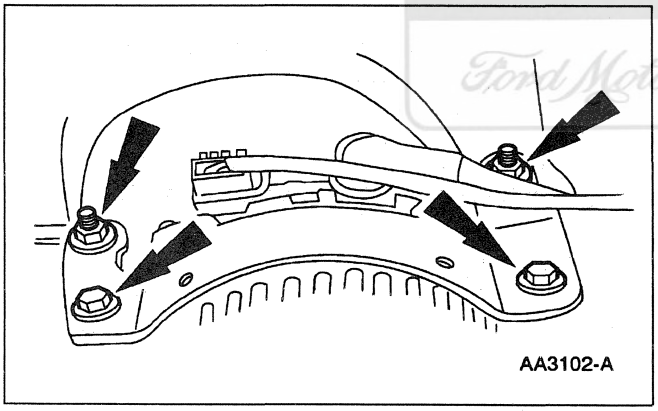

17. Remove the generator mounting bracket (10153).

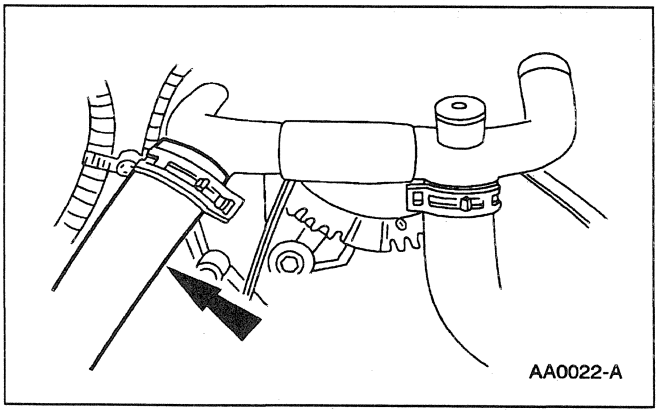

18. Remove the upper radiator hose (8260) and the water bypass hose (8597) from the water outlet tube.

REMOVAL AND INSTALLATION (Continued)

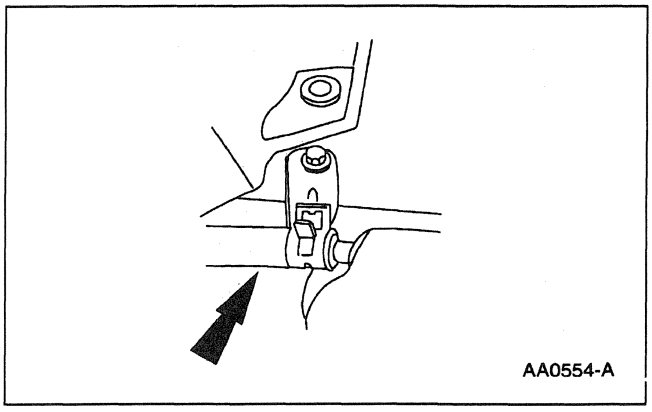

19. Disconnect the radiator overflow hose (8075).

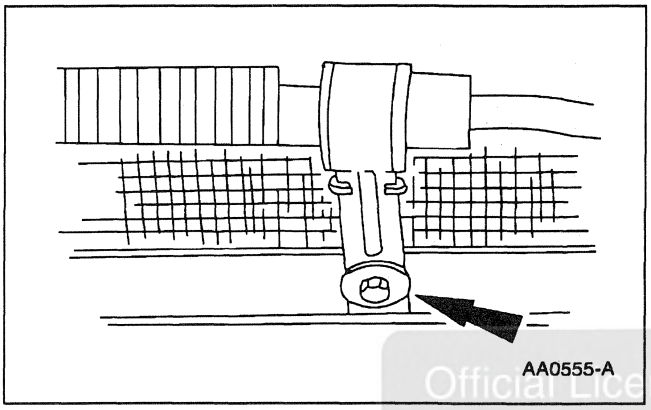

20. Remove the power steering pressure line from the bracket.

Official Licensed Product
Ford Motor Company

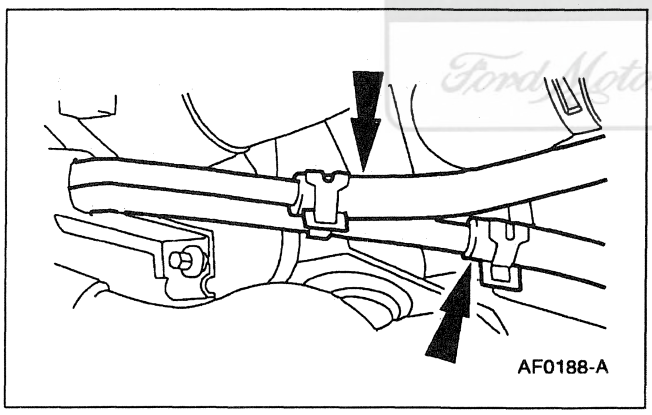

21. Remove the power steering pressure and return hoses.

REMOVAL AND INSTALLATION (Continued)

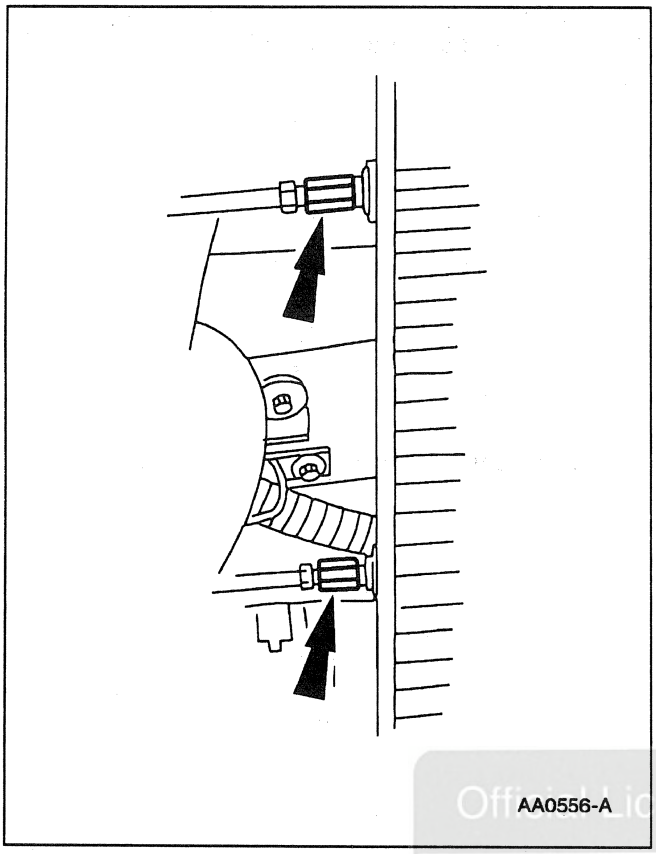

22. Disconnect the transmission cooling tubes from the radiator (8005).

Official Licensed Product
Ford Motor Company

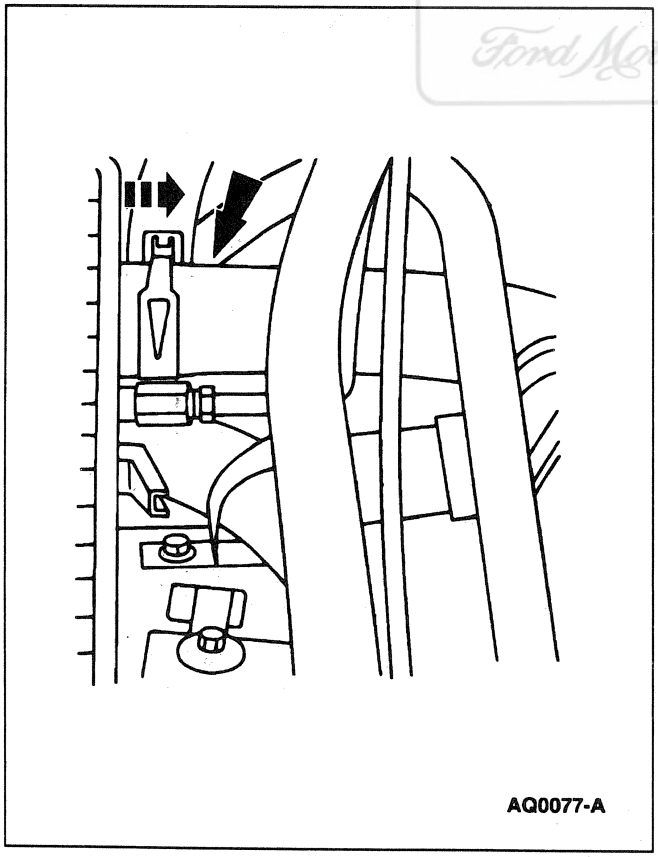

23. Disconnect the lower radiator hose (8286) from the radiator.

REMOVAL AND INSTALLATION (Continued)

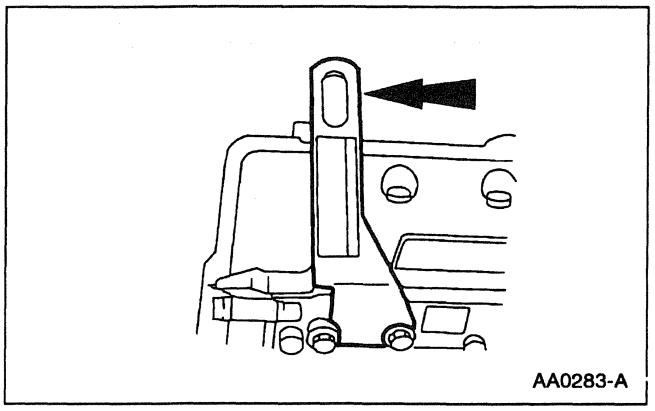

24. Install the Engine Lifting Set on both sides of the engine.

25. Remove the A/C compressor lines; refer to Section 412-03.

26. Raise and support the vehicle; refer to Section 100-02.

27. Remove the front tires and wheels; refer to Section 204-04.

28. Disconnect the RH and the LH air suspension height sensor (5359) connectors; refer to Section 204-05.

Official Licensed Product
Ford Motor Company

29. Remove the stabilizer bar link (5K484) from the front stabilizer bar (5482) ; refer to Section 204-01.

30. Disconnect the RH and the LH tie rod end (3A130) ; refer to Section 211-02.

31. Disconnect the RH and the LH lower front wheel spindle (3105) ; refer to Section 204-02.

32. Disconnect the RH and the LH front spring and shock (3C098) from the front suspension lower arm strut (3468) ; refer to Section 204-01.

33. Remove the dual converter Y pipe (5F250) ; refer to Section 309-00.

34. Remove the starter motor (11002) ; refer to Section 303-06.

REMOVAL AND INSTALLATION (Continued)

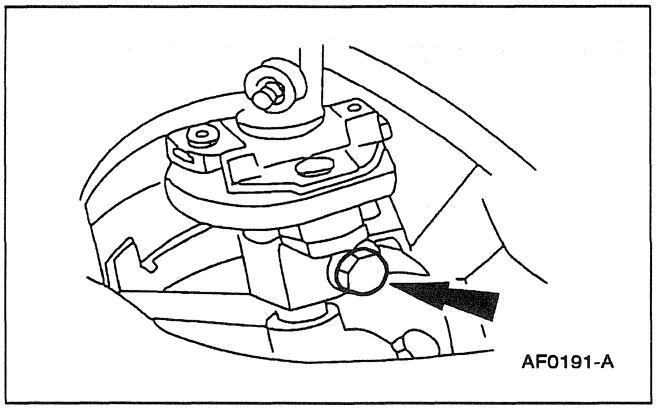

35. Remove the steering coupling at the pinch bolt joint.

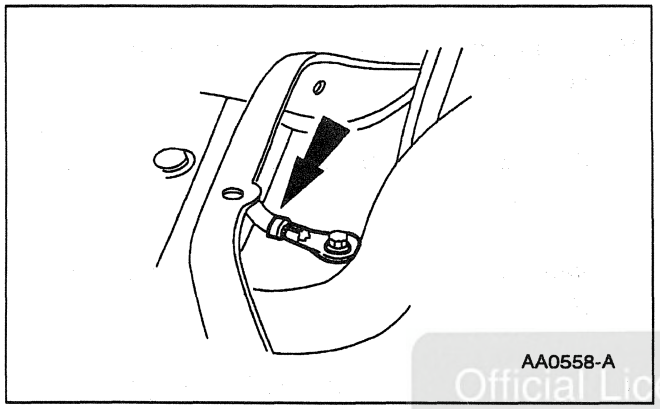

36. Remove the ground strap from the RH front fender apron.

Official Licensed Product
Ford Motor Company

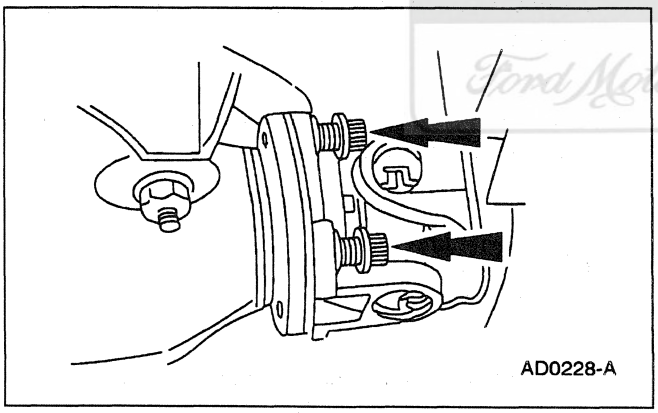

37. **NOTE:** To maintain initial driveshaft balance, mark the rear driveshaft yoke and axle flange so they may be installed in the original positions.

    Remove the four bolts from the rear axle universal joint flange to the driveshaft centering socket yoke.

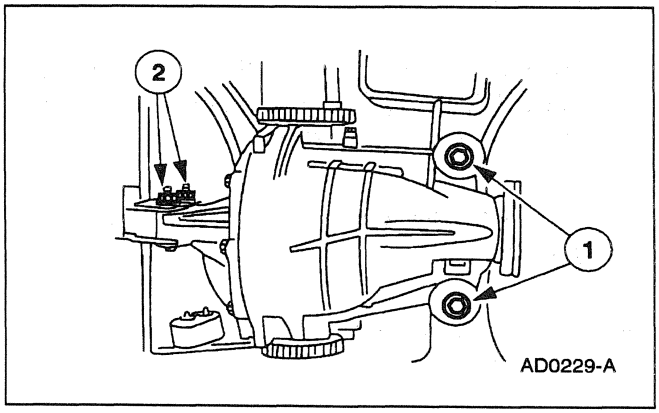

38. Remove the bolts.
    1 Remove the front nuts.
    2 Remove the rear nuts.

REMOVAL AND INSTALLATION (Continued)

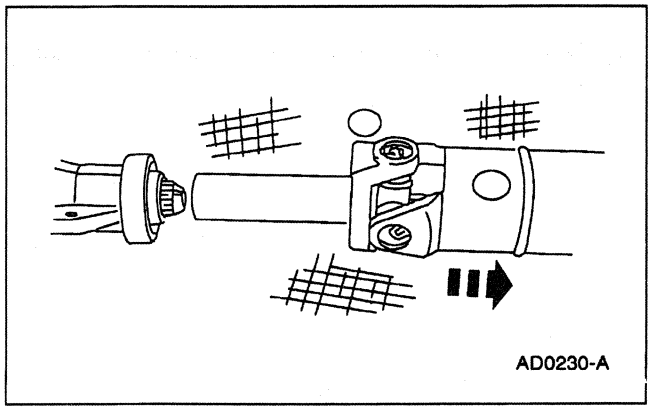

39. Position the rear driveshaft aside.

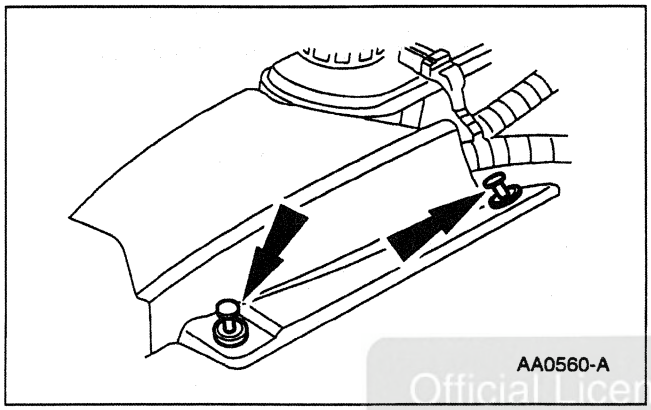

40. Remove the LH front shock absorber strut cover cup (18A179).

Official Licensed Product
Ford Motor Company®

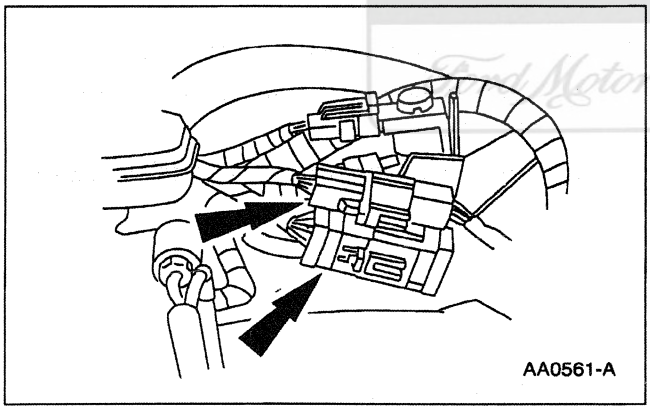

41. Disconnect the neutral switch wiring connectors near the LH fender wall.

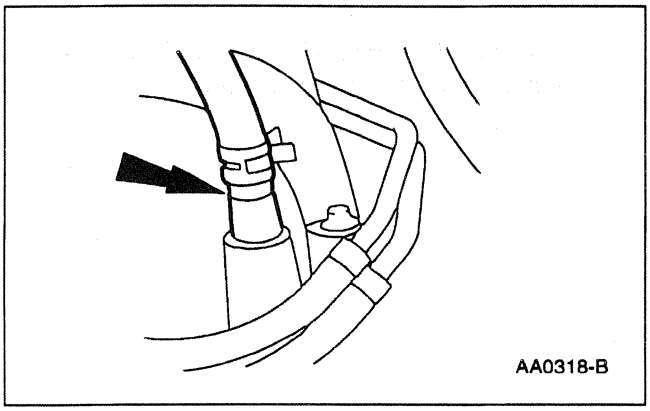

42. Remove the power brake booster hose from the lower intake manifold.

REMOVAL AND INSTALLATION (Continued)

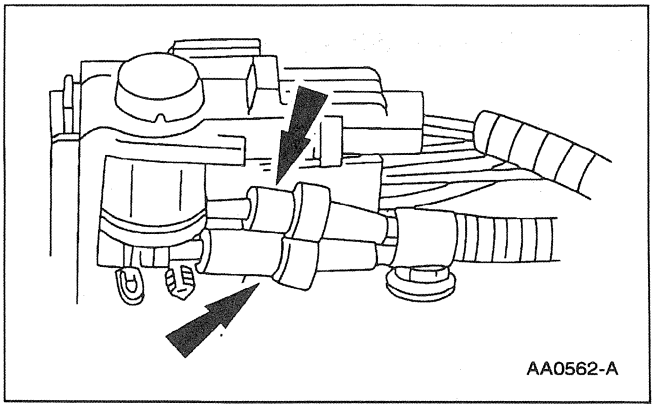

43. Disconnect the vacuum hoses near the LH fender wall.

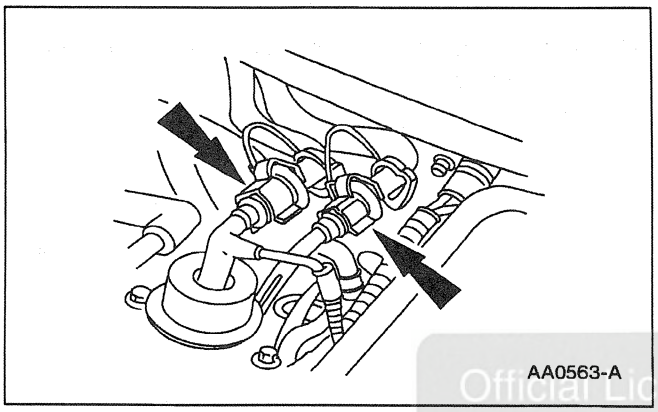

44. Disconnect the fuel lines from the fuel rail.

Official Licensed Product
Ford Motor Company

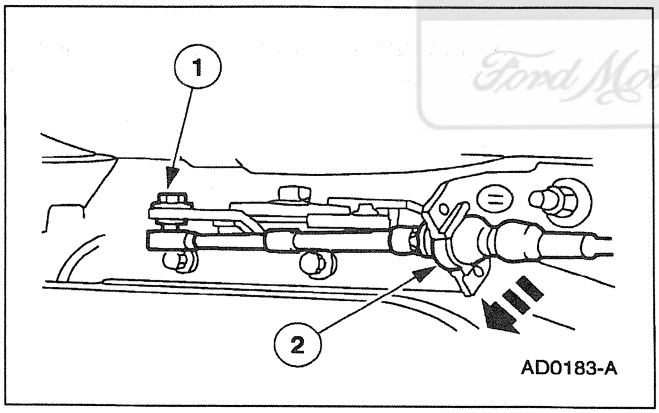

45. Remove the shift cable and bracket (7E395).
    1 Remove the nut from the shift cable and shifter.
    2 Remove the clip from the shift cable bracket.

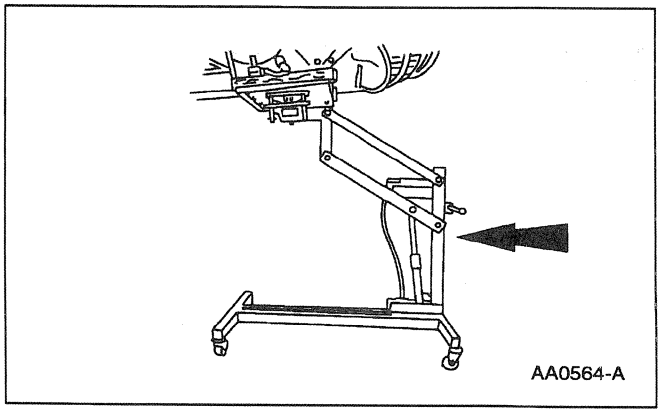

46. Position the Powertrain Lift and the Transmission Support Bracket under the engine.

REMOVAL AND INSTALLATION (Continued)

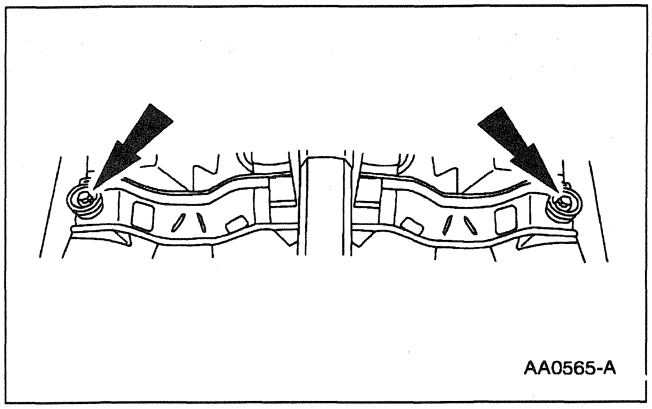

47. Remove the crossmember.

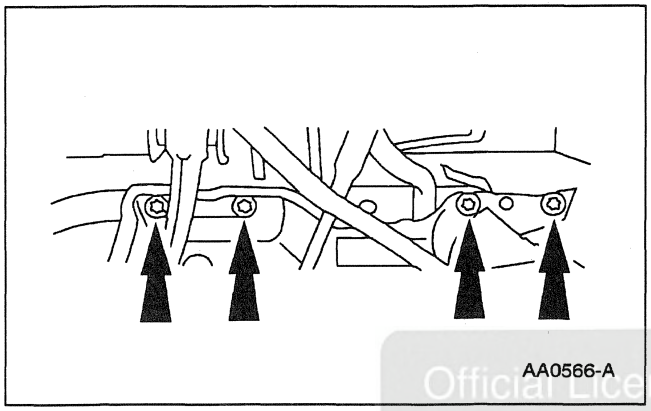

48. **NOTE:** Make sure the engine does not contact any surfaces when lowered.

    Move the eight bolts and lower the engine.

Official Licensed Product
Ford Motor Company

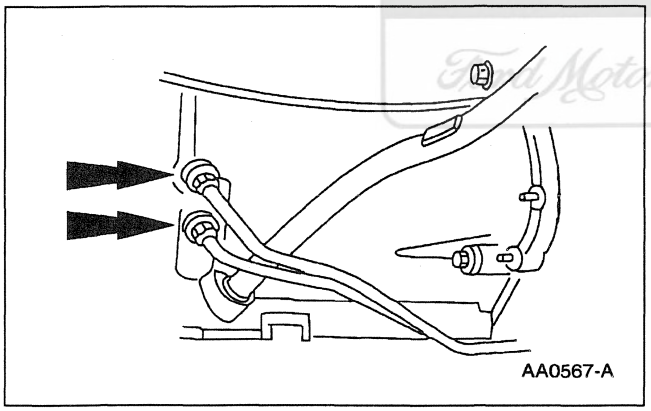

49. Disconnect the transmission lines.

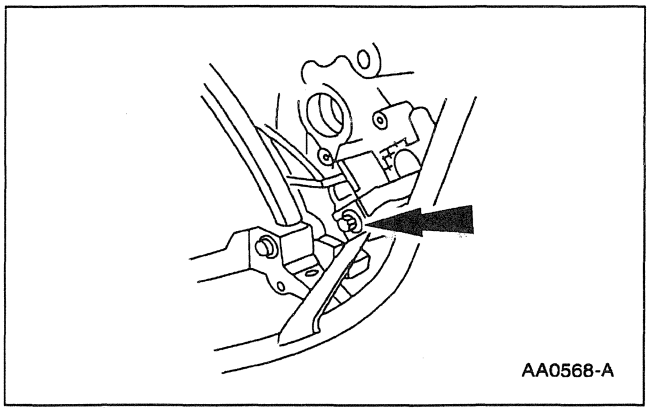

50. Remove the bolt from cylinder head.

REMOVAL AND INSTALLATION (Continued)

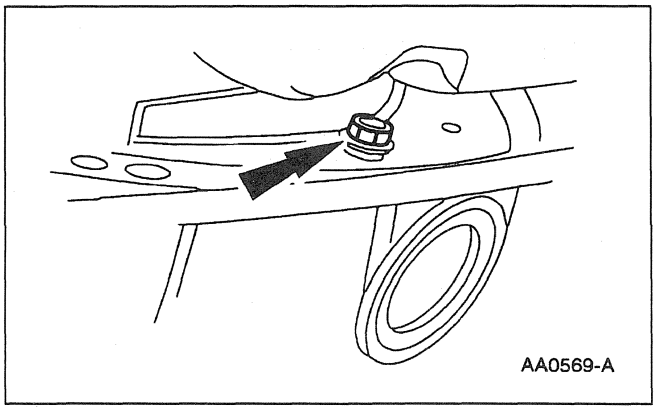

51. Remove the four bolts from the torque converter (7902).

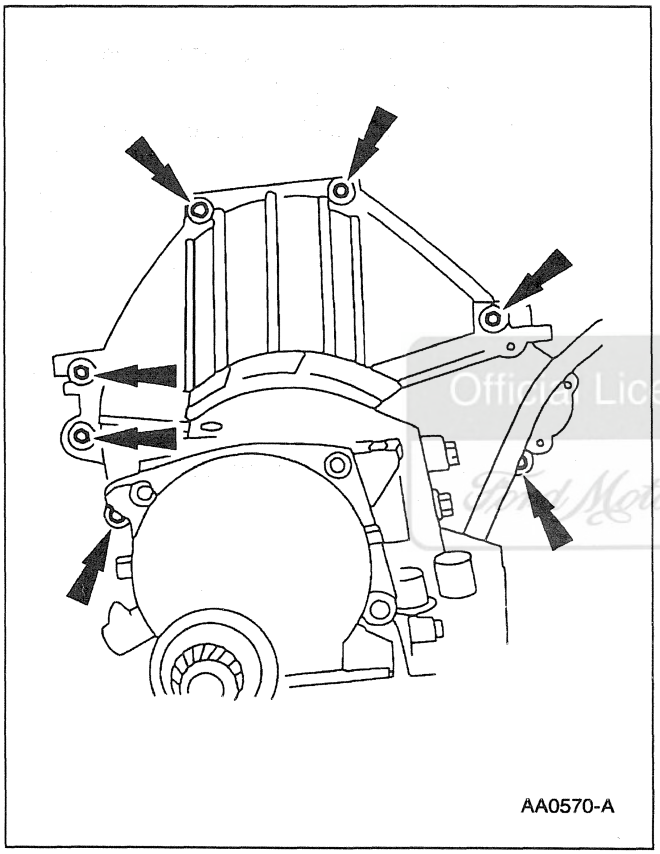

52. Remove the bolts.

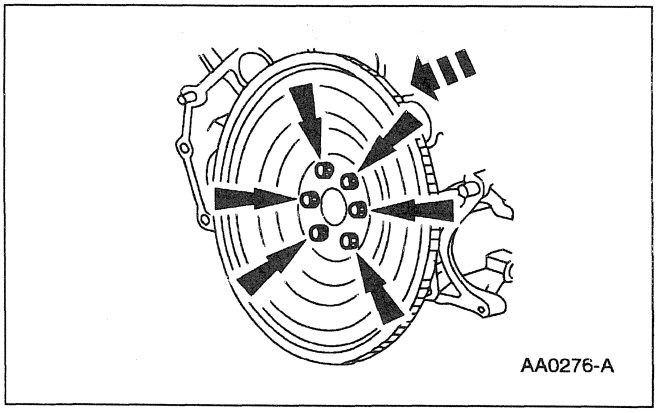

53. Remove the bolts.

Official Licensed Product
Ford Motor Company

REMOVAL AND INSTALLATION (Continued)

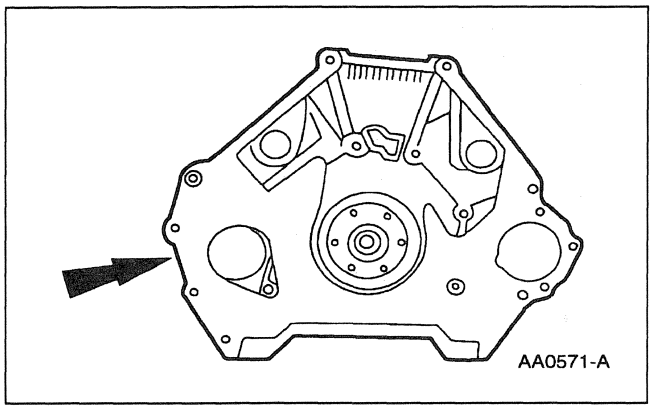

54. Remove the engine rear plate (7007).

55. Place the engine on a suitable work stand.

56. Remove the sub-frame from the engine.

57. Remove the engine lifting equipment.

Installation

Official Licensed Product
Ford Motor Company

1. Install the sub-frame on the engine.
2. Install the seven bolts.

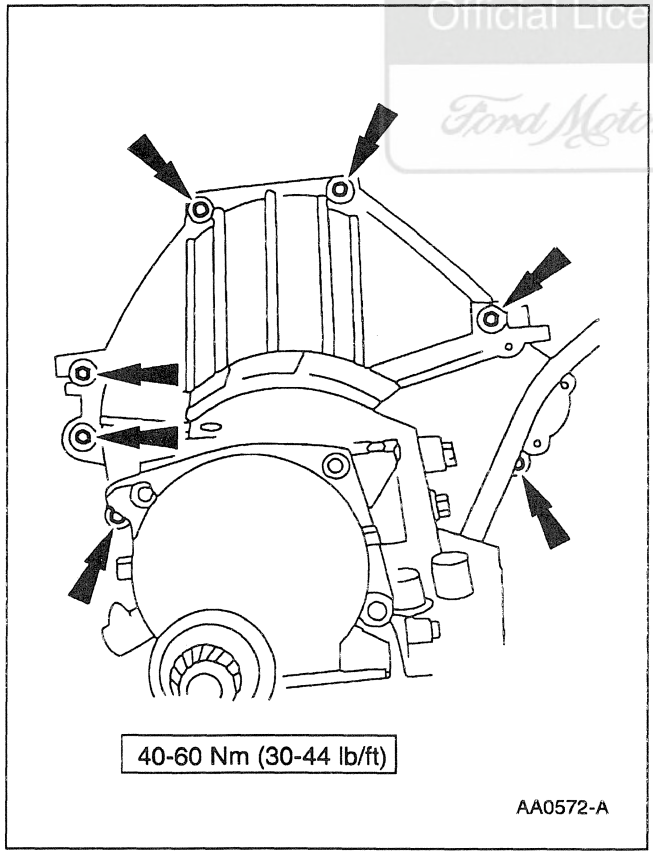

3. If not installed; install the Engine Lifting Set.

REMOVAL AND INSTALLATION (Continued)

4. Place engine, transmission and front sub-frame on the Powertrain Lift and the Transmission Support Bracket.

5. Raise engine, transmission and front sub-frame into position.

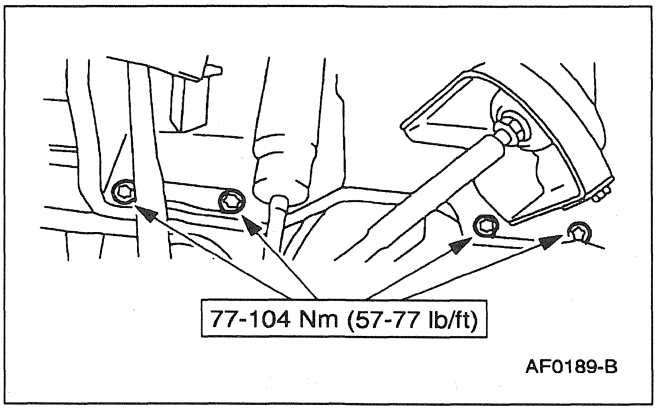

6. Align front sub-frame to body and install eight bolts.

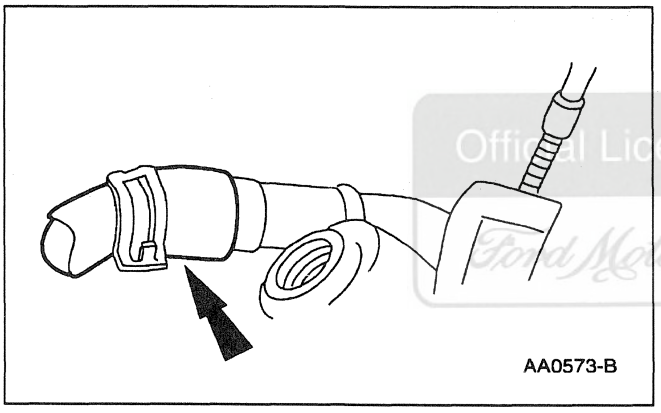

7. Connect the heater hoses.

Official Licensed Product
Ford Motor Company

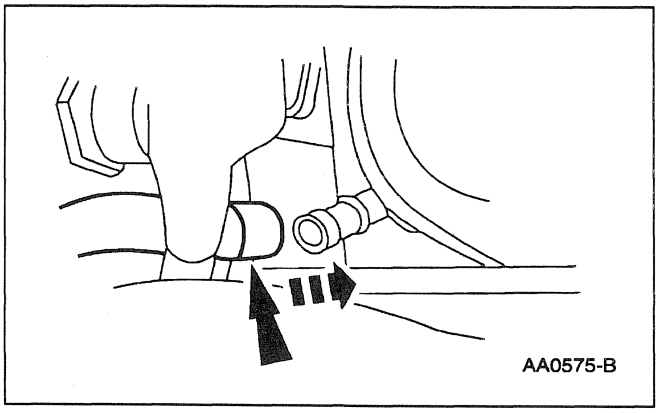

8. Connect the evaporative emission hose to the upper intake manifold.

REMOVAL AND INSTALLATION (Continued)

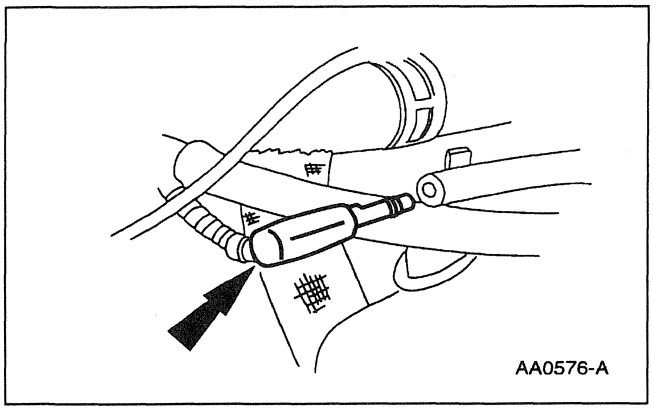

9. Connect the chassis vacuum hose.

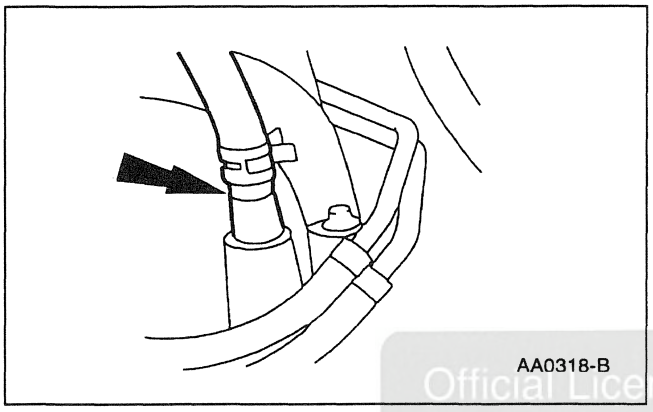

10. Connect the power brake booster hose to the lower intake manifold.

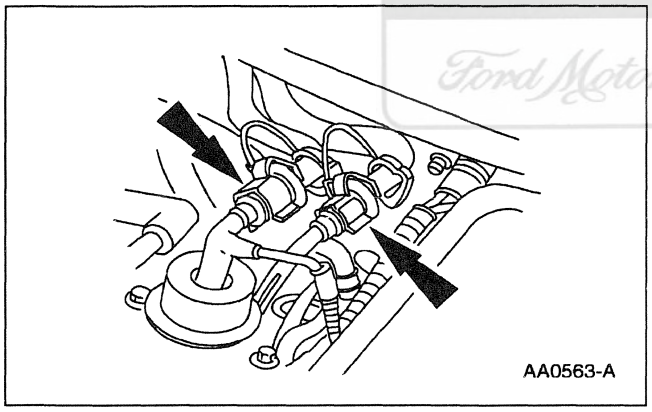

11. Connect the fuel lines and install the safety clips.

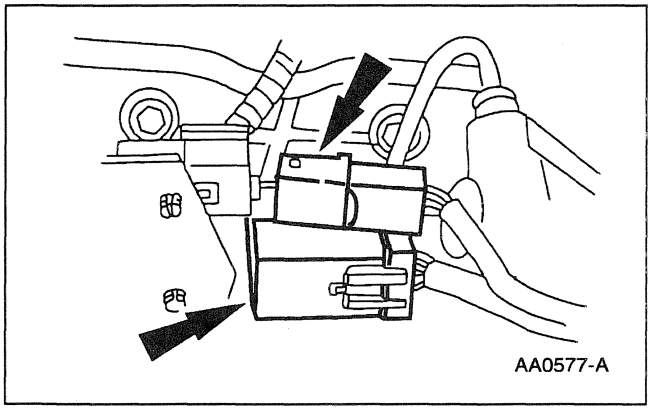

12. Connect the neutral switch wiring connectors near the LH fender apron.

Official Licensed Product
Ford Motor Company

REMOVAL AND INSTALLATION (Continued)

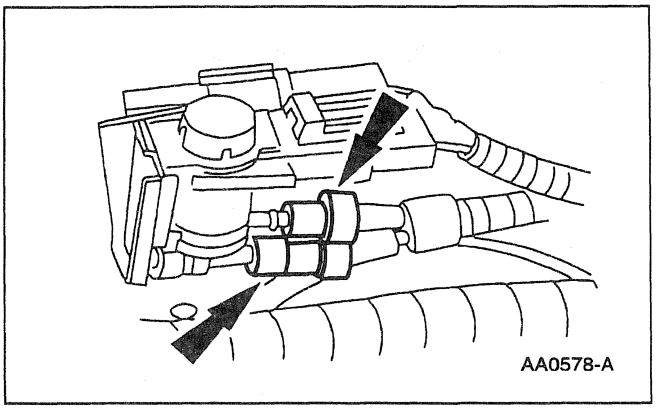

13. Connect the E.A.S. vacuum lines to the solenoid near the LH fender apron.

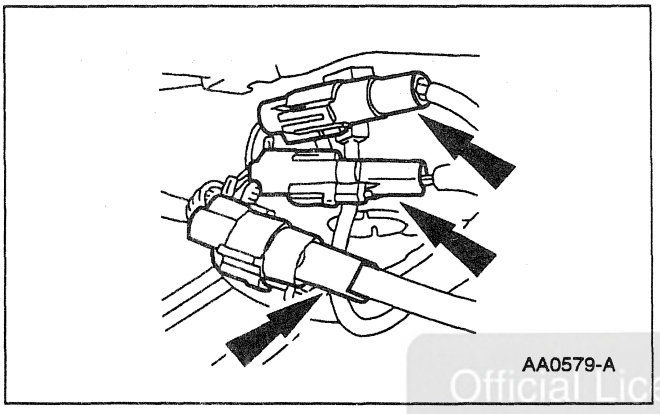

14. Connect the wire harness connectors under the power distribution box.

Official Licensed Product
Ford Motor Company

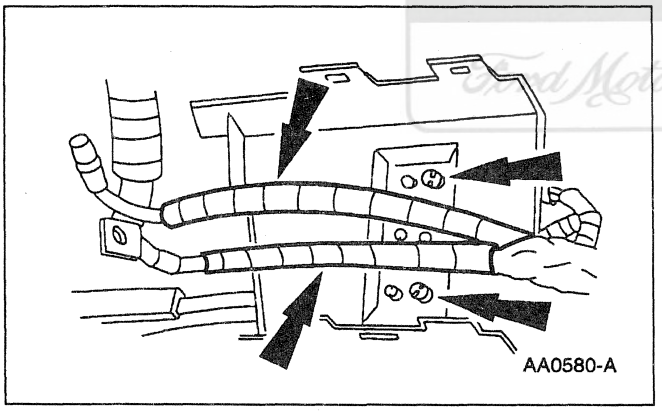

15. Attach the five wire harnesses to the bottom and top side of the power distribution box.

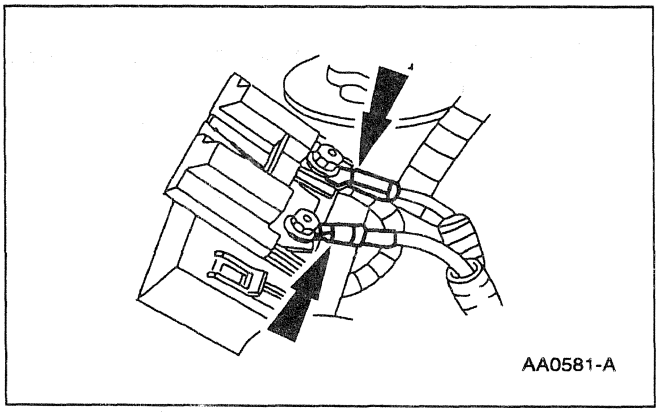

16. Attach the cables to the power distribution box.

REMOVAL AND INSTALLATION (Continued)

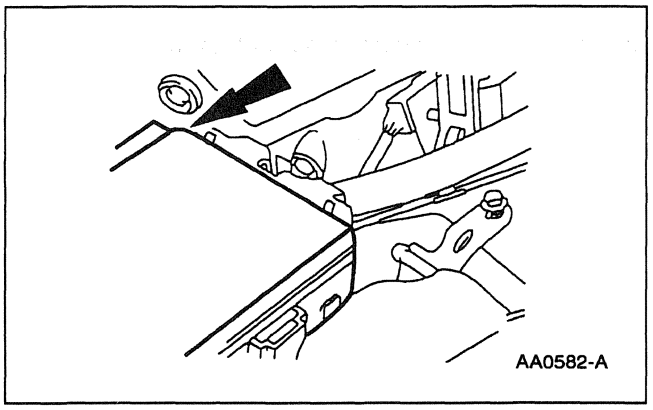

17. Attach the power distribution box to the fender wall.

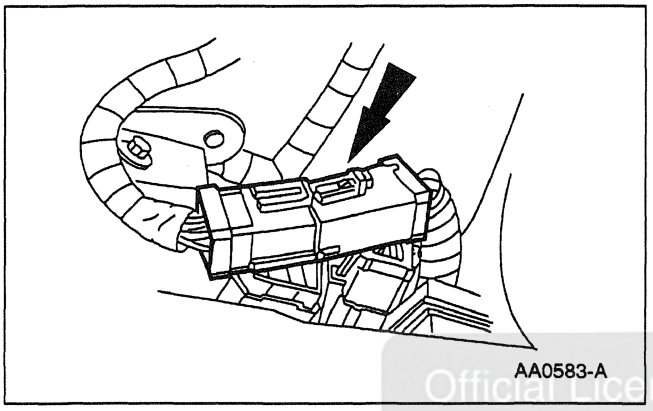

18. Connect the data link connector next to the master cylinder.

Official Licensed Product
Ford Motor Company

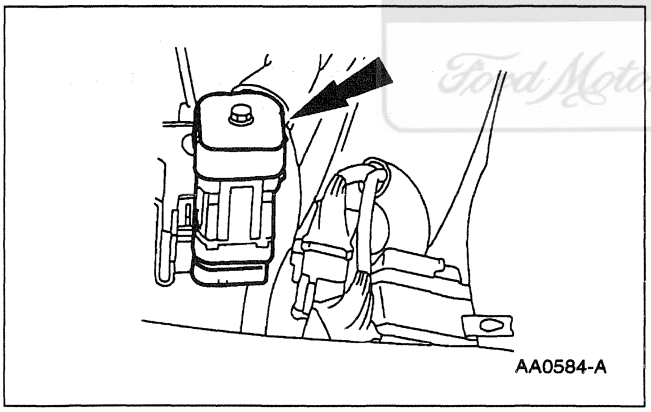

19. Connect the 42-pin connector.

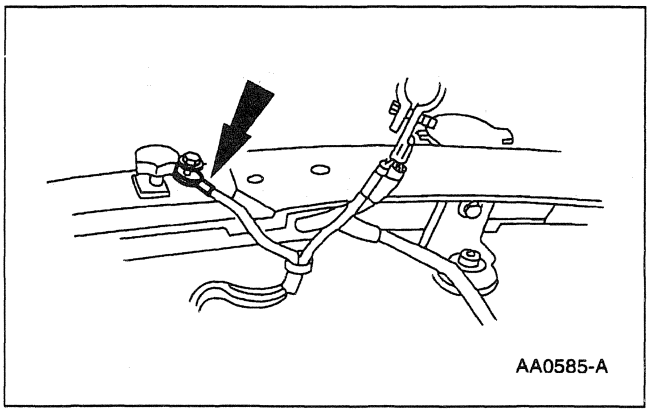

20. Install the battery ground to the body.

REMOVAL AND INSTALLATION (Continued)

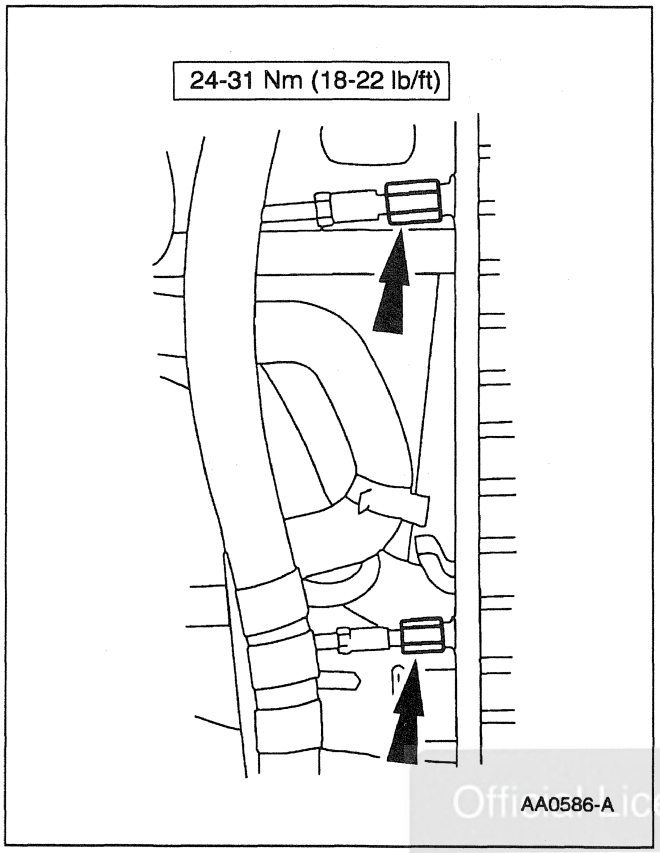

21. Connect the transmission cooling lines to the radiator.

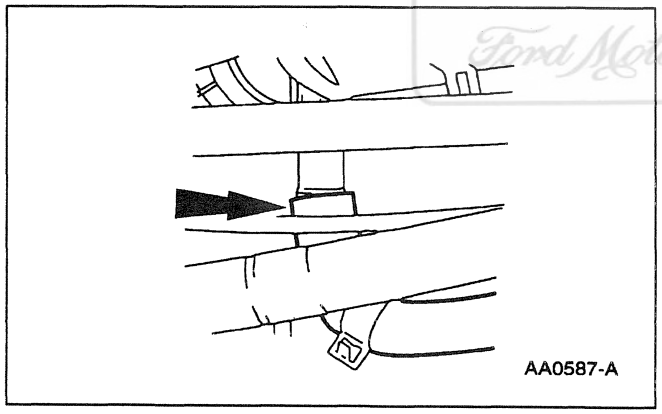

22. Connect the radiator overflow hose to the water thermostat housing.

23. Connect the A/C compressor lines; refer to Section 412-03.

24. Install the fan shroud (8146) ; refer to Section 303-03.

Official Licensed Product
Ford Motor Company

REMOVAL AND INSTALLATION (Continued)

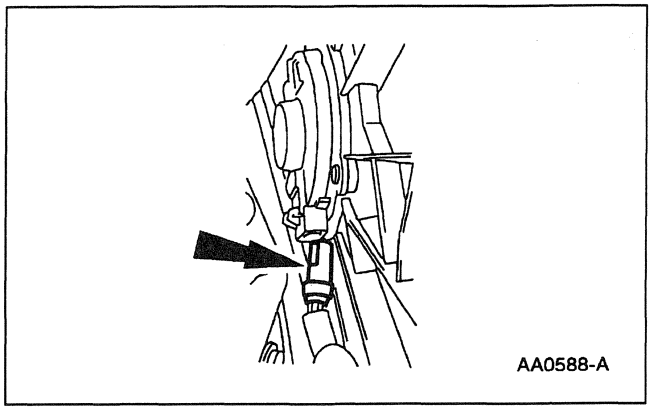

25. Connect the fan shroud connector.

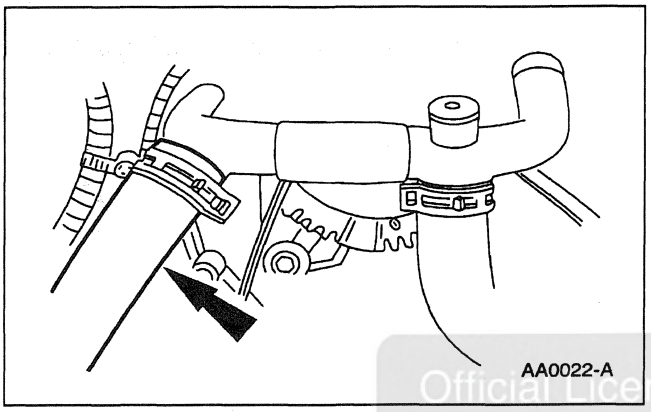

26. Connect the upper radiator hose to the water bypass tube.

Official Licensed Product
Ford Motor Company

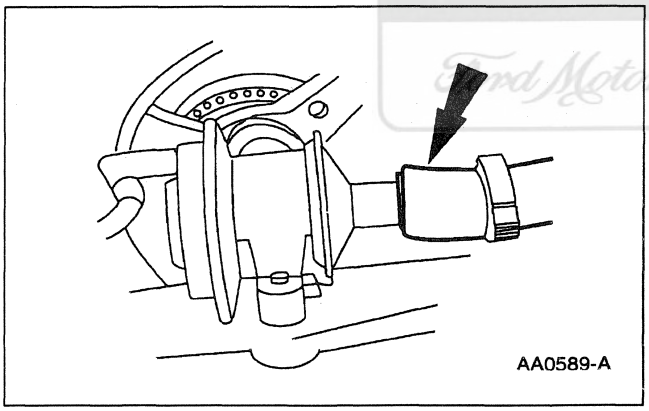

27. Connect the diverter valve hose.

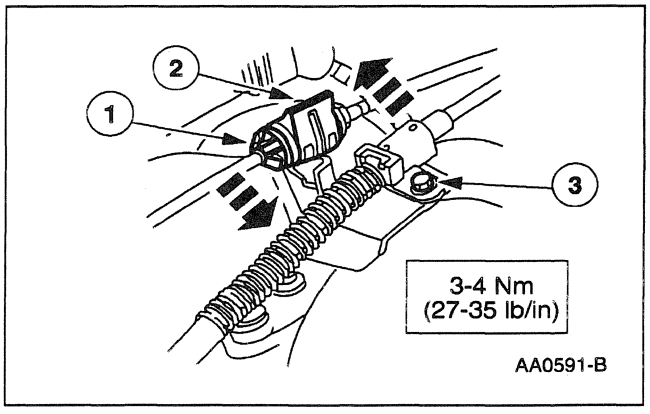

28. Install the accelerator cable.
    1 Slide the accelerator cable into the bracket.
    2 Turn the clip to lock the accelerator cable.
    3 Tighten the bolt.

REMOVAL AND INSTALLATION (Continued)

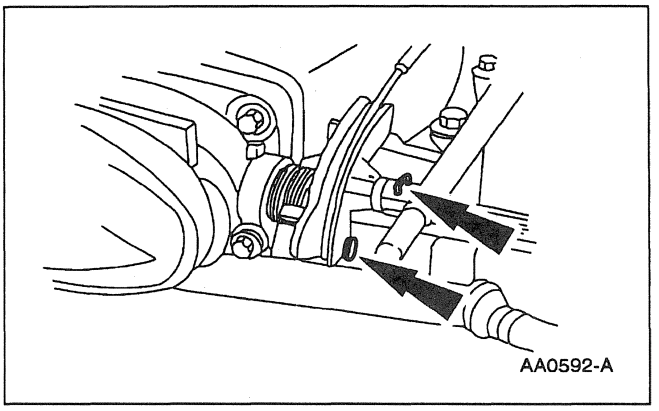

29. Connect the cruise control and the accelerator cables to the throttle body.

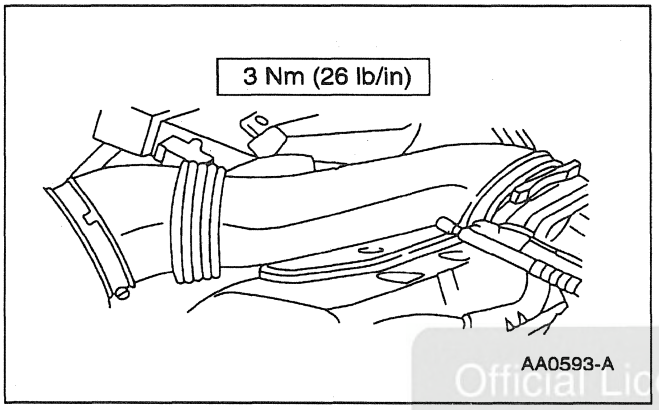

30. Install the air cleaner outlet tube and install the clamps.

Official Licensed Product
Ford Motor Company

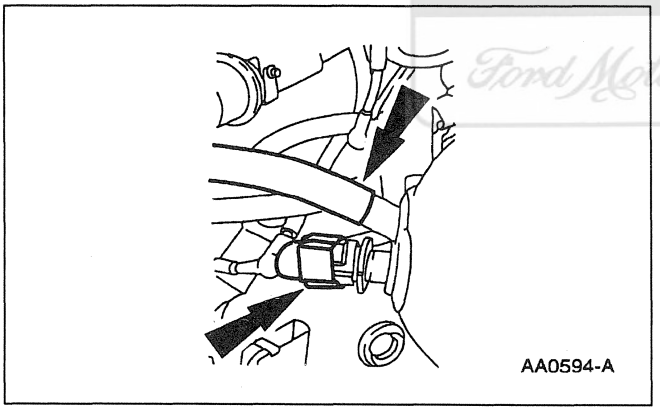

31. Install the crankcase ventilation tube (6758) and connect the intake air temperature sensor connector.

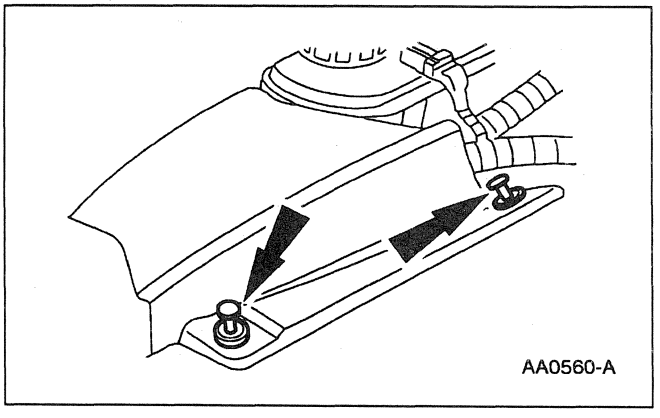

32. Install the LH front shock absorber strut cover cup.

33. Raise and support the vehicle.

REMOVAL AND INSTALLATION (Continued)

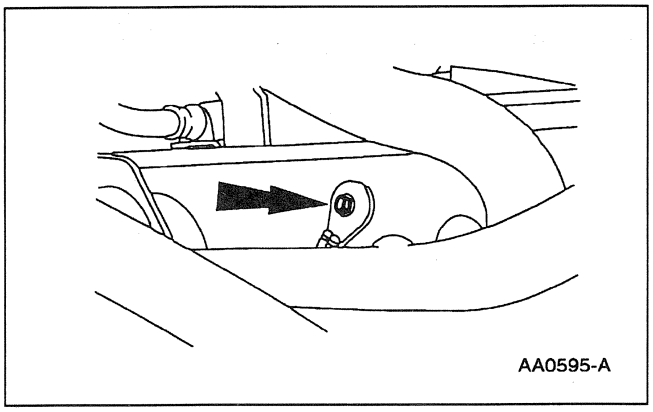

34. Install the engine-to-body grounding strap.

35. Install the starter motor ; refer to Section 303-06.

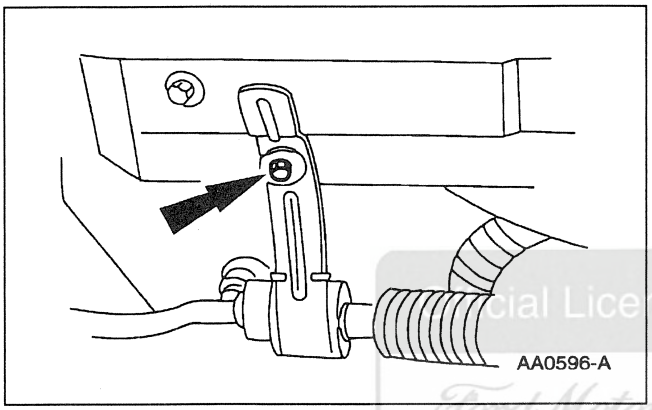

36. Install the power steering line bracket to the body.

cial Licensed Product
Ford Motor Company

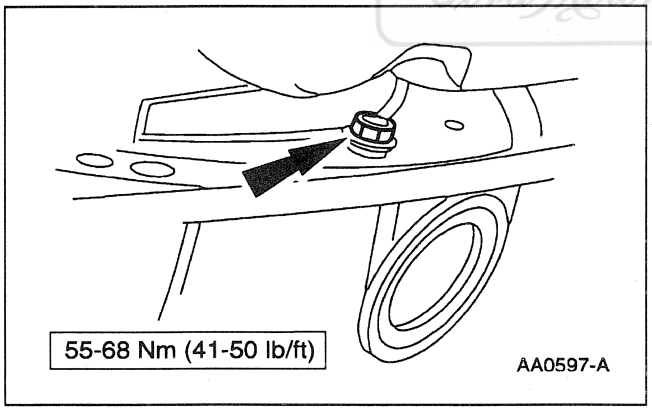

37. Install the four nuts to the torque converter.

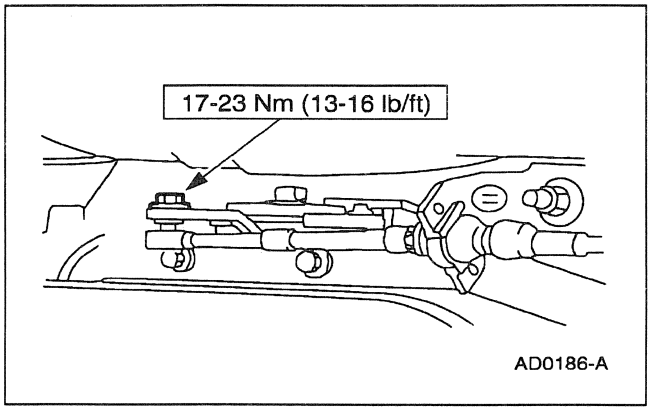

38. Install the shift cable on the shifter.

REMOVAL AND INSTALLATION (Continued)

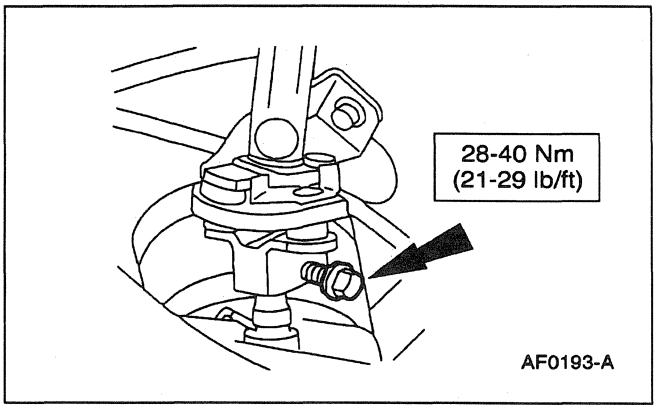

39. Install the steering coupling at the pinch bolt joint.

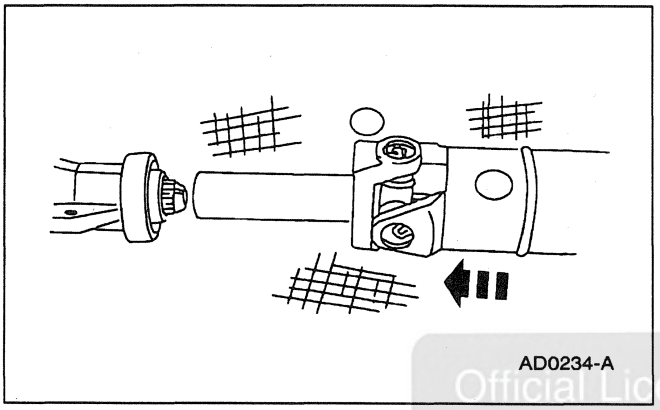

40. Slide the drive shaft and align the drive shaft centering socket yoke to the rear axle universal joint flange.

Official Licensed Product
Ford Motor Company

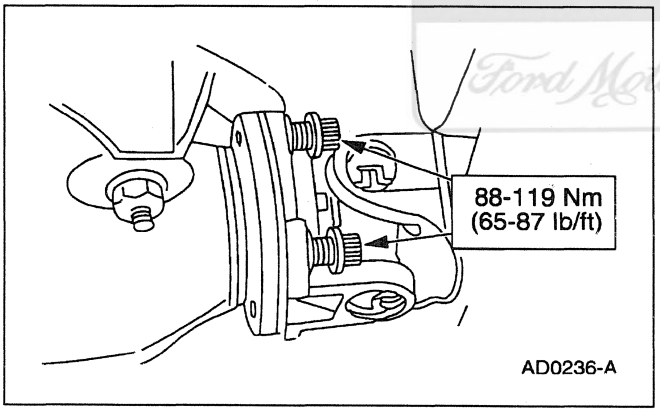

41. Install the four bolts from the rear axle universal joint flange to the driveshaft centering socket yoke.

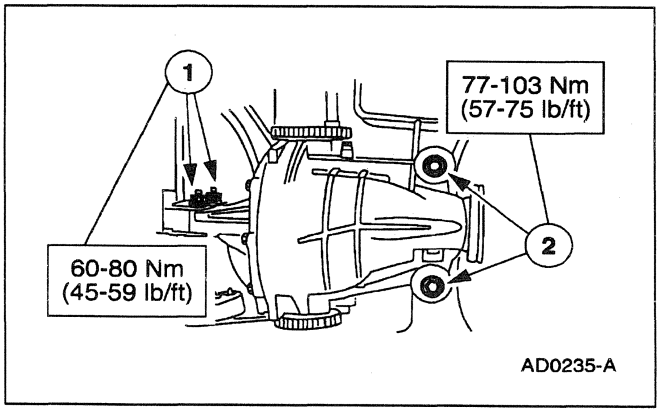

42. Install the rear axle differential front and rear insulator nuts.

REMOVAL AND INSTALLATION (Continued)

43. Install the dual converter Y pipe ; refer to Section 309-00.

44. Connect the RH and the LH front spring and shock to the front suspension lower arm strut ; refer to Section 204-01.

45. Connect the RH and LH lower front wheel spindle ; refer to Section 204-02.

46. Connect the RH and LH outer tie rod end ; refer to Section 211-02.

47. Install the stabilizer bar link to the front stabilizer bar ; refer to Section 204-01.

48. Connect the RH and the LH air suspension height sensor connectors; refer to Section 204-05.

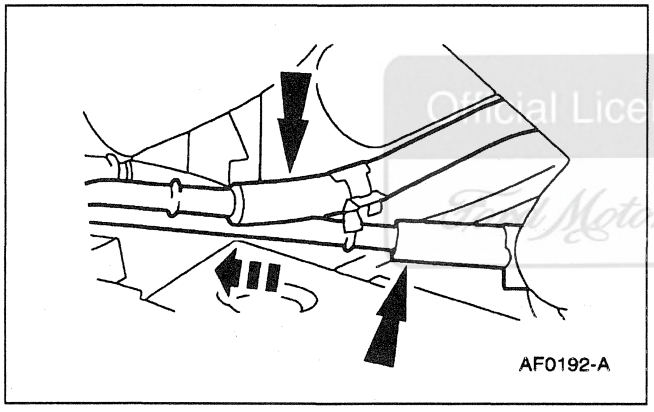

49. Connect the power steering pressure and the return hoses.

Official Licensed Product
Ford Motor Company

50. Install the front tires and wheels; refer to Section 204-04.

51. Install the windshield wiper ; refer to Section 501-16.

52. Install the battery.

53. Fill the power steering pump (3A674) ; refer to Section 211-02.

54. Fill the radiator with engine coolant; refer to Section 303-03.

55. Start the engine and check for leaks.

REMOVAL AND INSTALLATION (Continued)

56. Recheck all fluid levels. Fill as required.

57. Recharge the air conditioning system; refer to Section Section 412-00.

58. Check the front end alignment; refer to Section 204-00.

DISASSEMBLY AND ASSEMBLY

Engine

Special Tool(s)

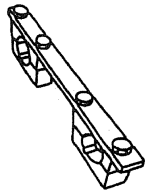 ST1715-A	Camshaft Holding Tool 303-446 (T93P-6256-AH)
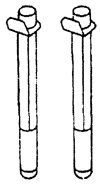 ST1337-A	Connecting Rod Guide Tool 303-442 (T93P-6136-A)
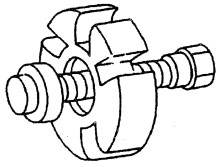 ST1286-A	Crankshaft Damper Remover 303-009 (T58P-6316-D)
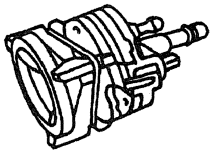 ST1276-A	Cylinder Ridge Reamer 303-016 (T64L-6011-EA)

(Continued)

Special Tool(s)

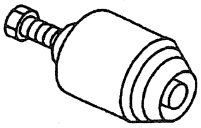 ST1288-A	Front Cover Seal Remover 303-107 (T74P-6700-A)
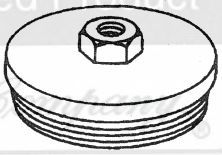 ST1382-A	Rear Crankshaft Seal Remover 303-519 (T95P-6701-EH)
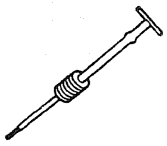 ST1185-A	Slide Hammer 100-001 (T50T-100-A)
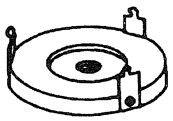 ST1481-A	Rear Crankshaft Slinger Remover 303-514 (T95P-6701-AH)

Ford Motor Company Licensed Product

Disassembly

1. Remove the engine; refer to Engine Removal and Installation in this section.

DISASSEMBLY AND ASSEMBLY (Continued)

2. Remove the drive belt (8620).

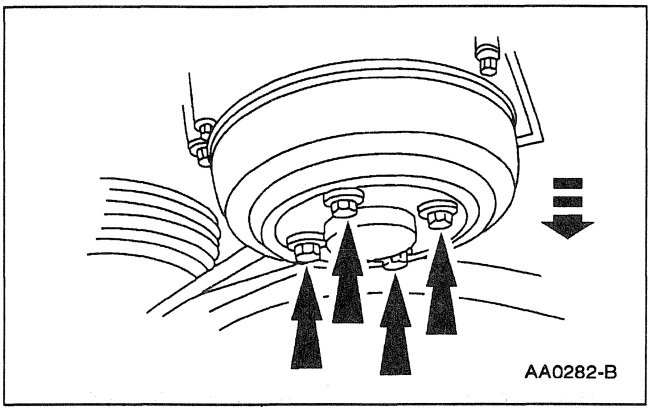

3. Remove the bolts and the water pump pulley (8509) .

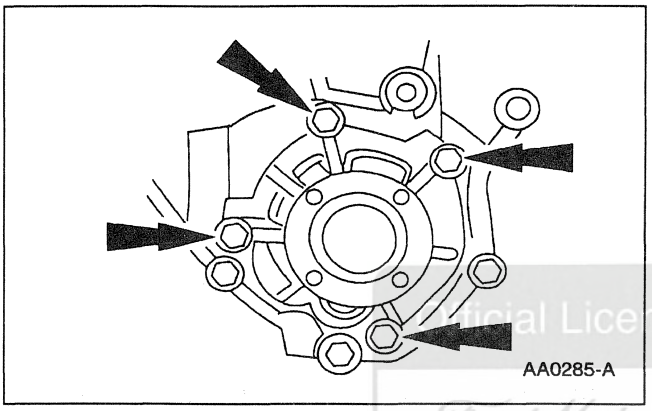

4. Remove the bolts and the water pump (8501) .

Official Licensed Product
Ford Motor Company

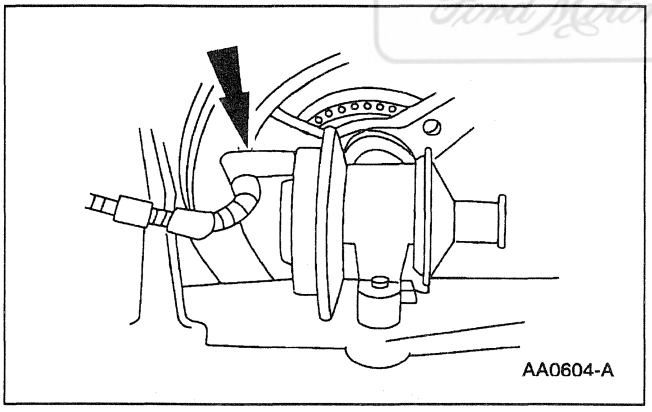

5. Remove the vacuum line from secondary air injection diverter valve (9F491) .

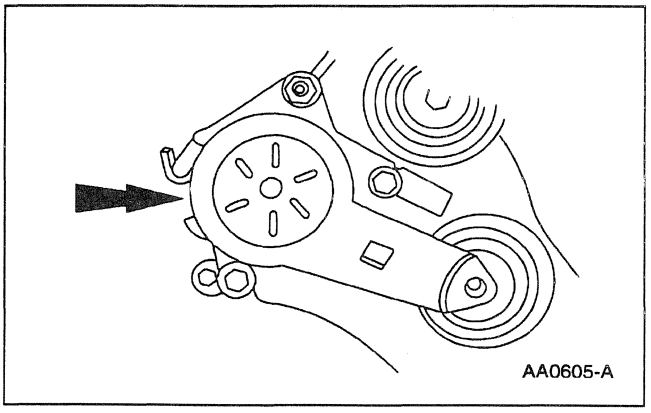

6. If necessary, remove the bolts and remove the drive belt tensioner (6B209) .

DISASSEMBLY AND ASSEMBLY (Continued)

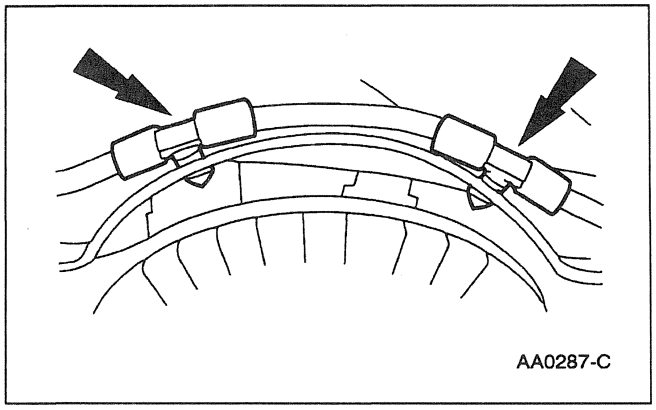

7. Disconnect the wire from the support bracket.

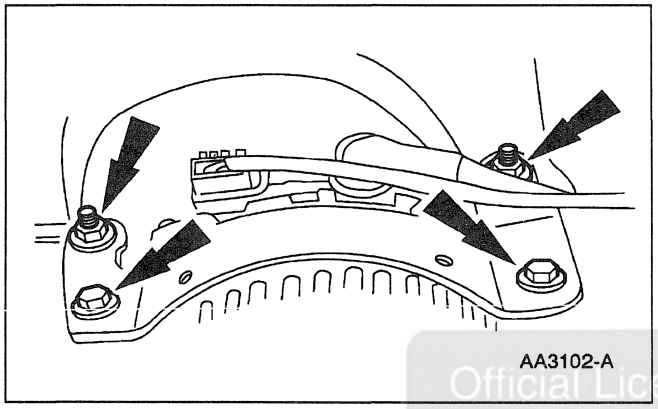

8. Remove the bolts and the generator mounting bracket (10153) .

Official Licensed Product
Ford Motor Company

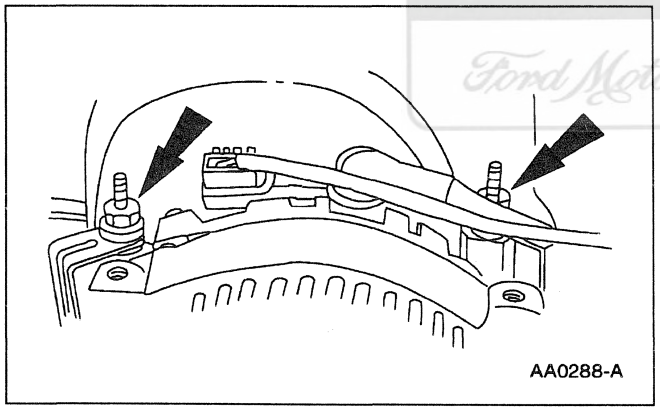

9. Remove the nuts and remove the water bypass tube (8548) .

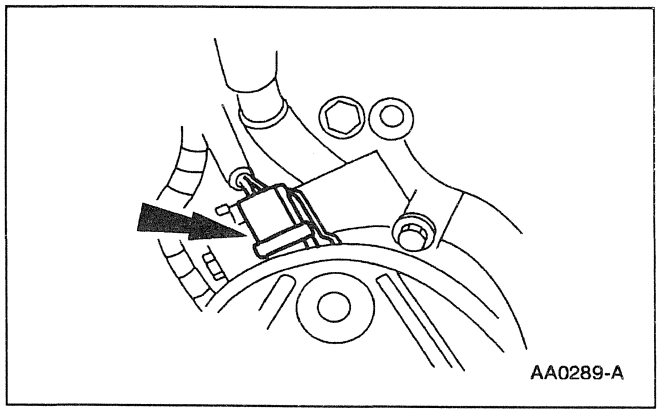

10. Disconnect the engine control sensor wiring from the A/C compressor (19703) .

DISASSEMBLY AND ASSEMBLY (Continued)

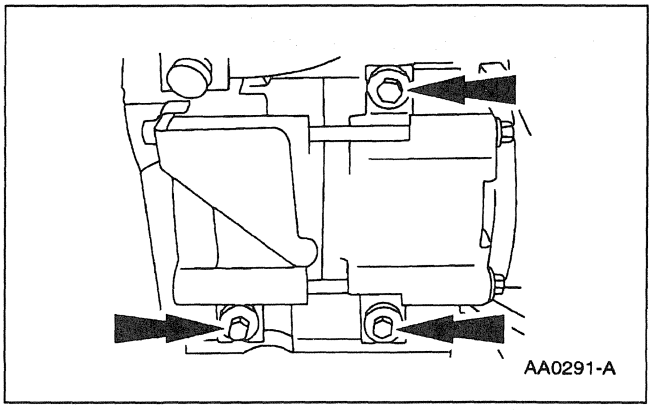

11. Remove the bolts from the A/C compressor and remove the A/C compressor .

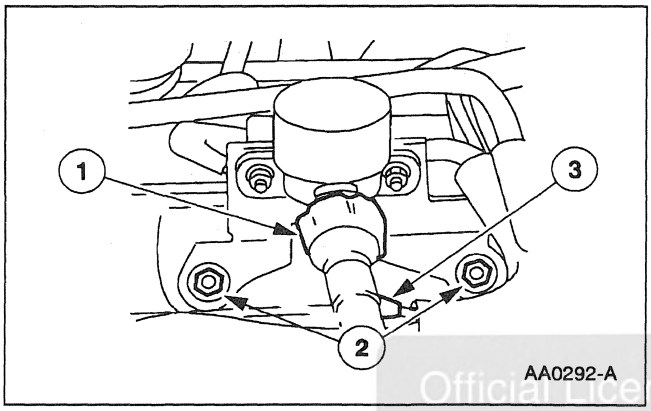

12. Remove the EGR vacuum regulator control and bracket assembly.
    1. Disconnect connector from EGR vacuum regulator.
    2. Remove the retaining nuts from the EGR vacuum regulator control and bracket assembly.
    3. Remove two vacuum lines and remove the EGR vacuum regulator control and bracket assembly.

Official Licensed Product
Ford Motor Company

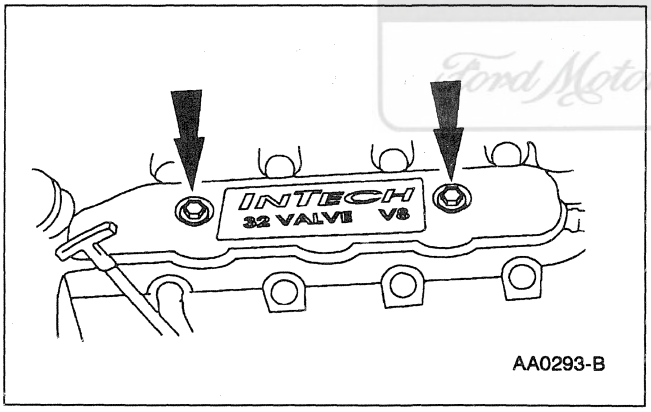

13. Remove the bolts from both ignition coil covers and remove the ignition coil wire.

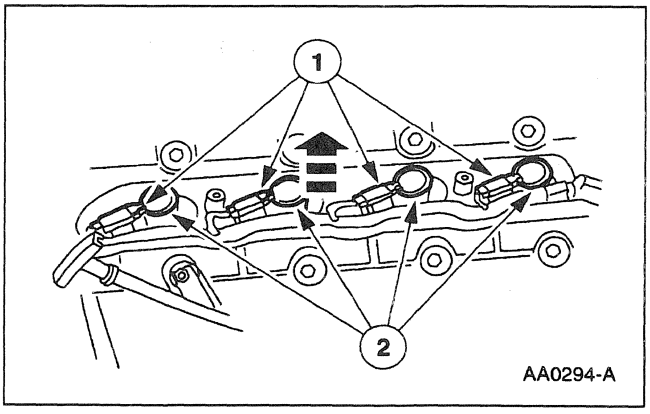

14. Remove the RH and LH ignition coil assembly from the ignition coils.
    1. Disconnect the ignition coil connectors from the ignition coils.
    2. Pull and remove the ignition coil assembly.

DISASSEMBLY AND ASSEMBLY (Continued)

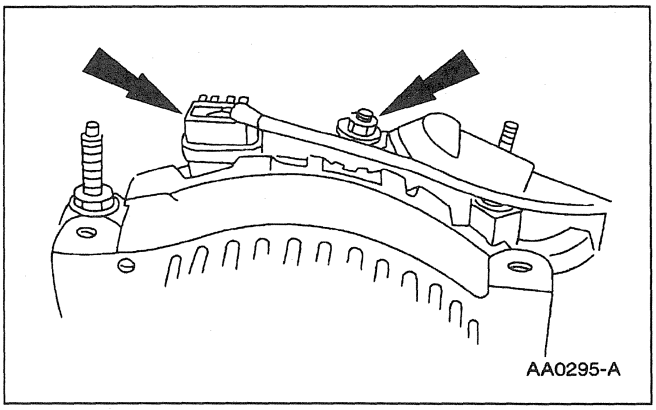

15. Remove the generator wiring.

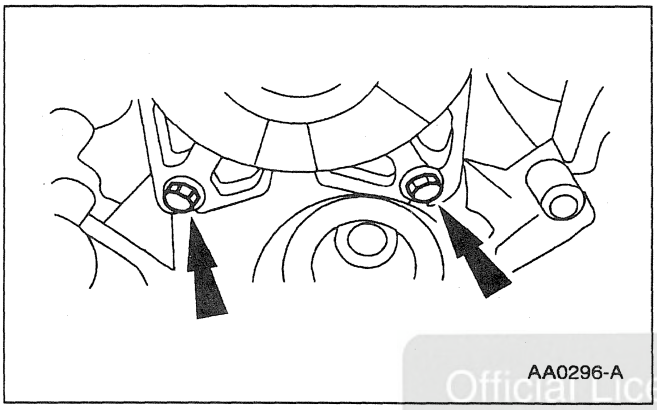

16. Loosen bolts and remove the generator (GEN)(10300) .

Official Licensed Product
Ford Motor Company

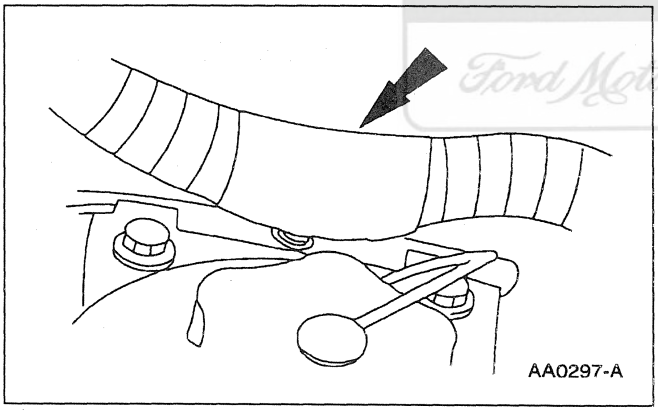

17. Disconnect the wire harness from the power steering reservoir bracket.

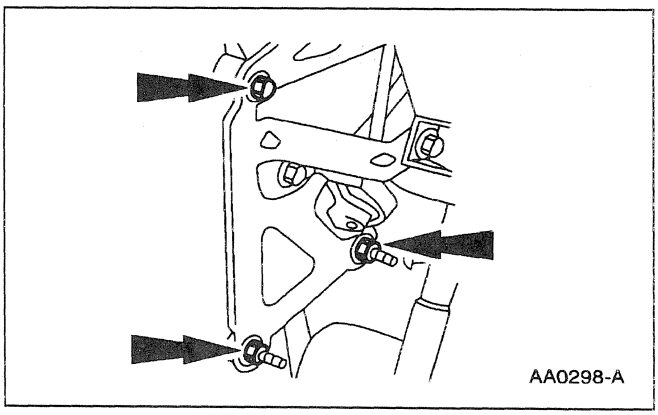

18. Remove the bolts from the power steering reservoir bracket.

DISASSEMBLY AND ASSEMBLY (Continued)

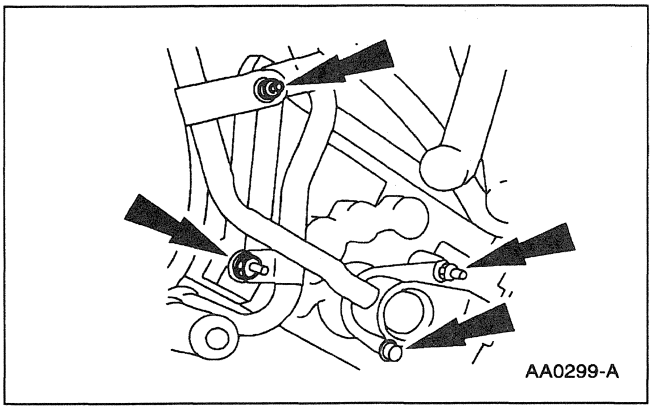

19. Remove the nut and bolts from the water inlet tube and remove the heater water tube.

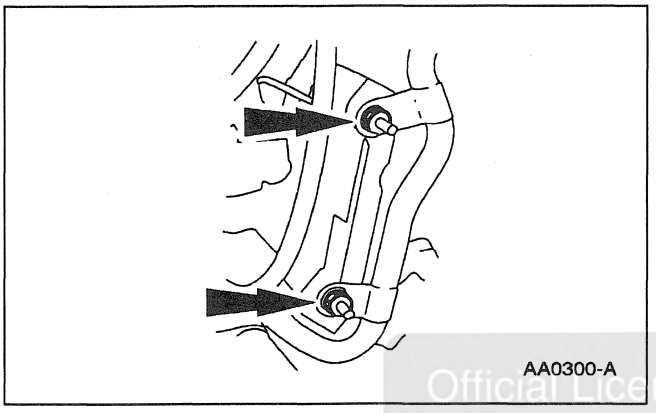

20. Remove the stud bolts from the heater outlet hose.

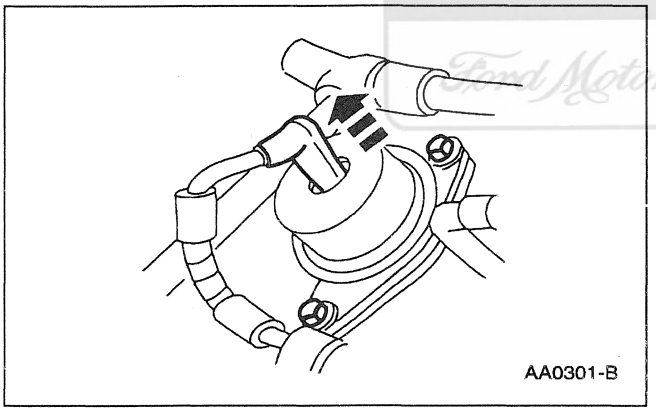

21. Disconnect vacuum hose from the fuel pressure regulator (9C968).

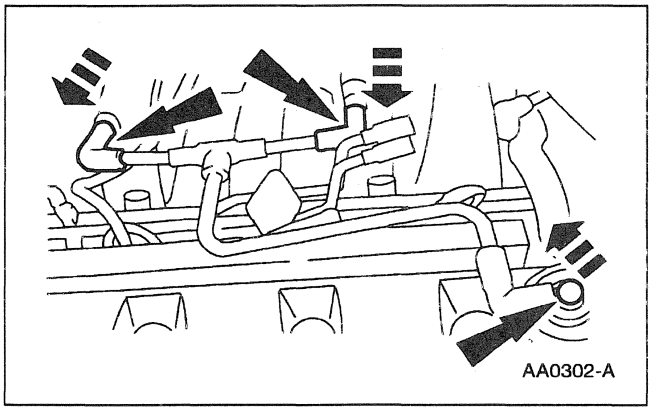

22. Remove the crankcase vent connector and hose (6C324).

Official Licensed Product
Ford Motor Company

DISASSEMBLY AND ASSEMBLY (Continued)

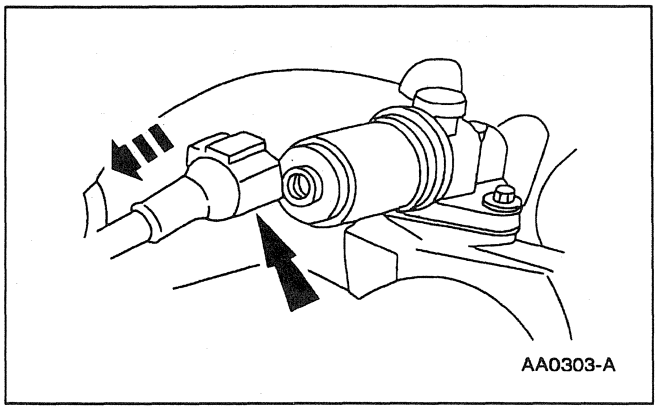

23. Remove the connector from the idle air control valve (IAC valve)(9F715) .

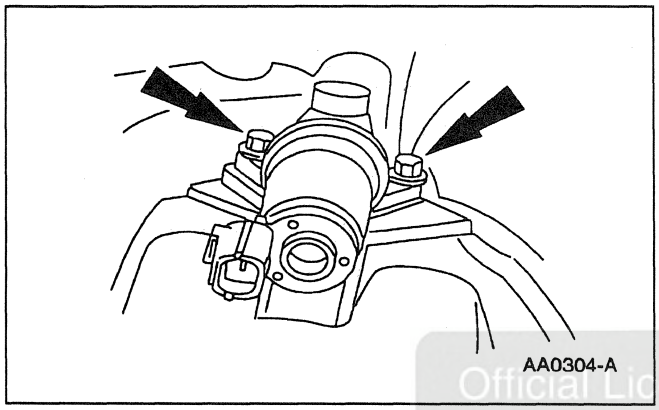

24. If necessary, remove the bolts and the idle air control valve .

Official Licensed Product
Ford Motor Company

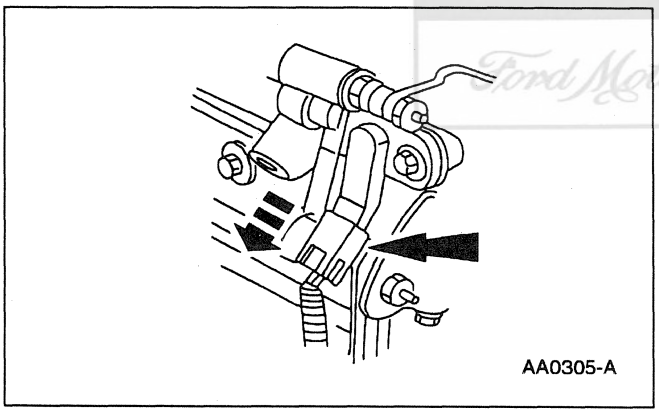

25. Disconnect the connector from the crankshaft position sensor (CKP sensor)(6C315) .

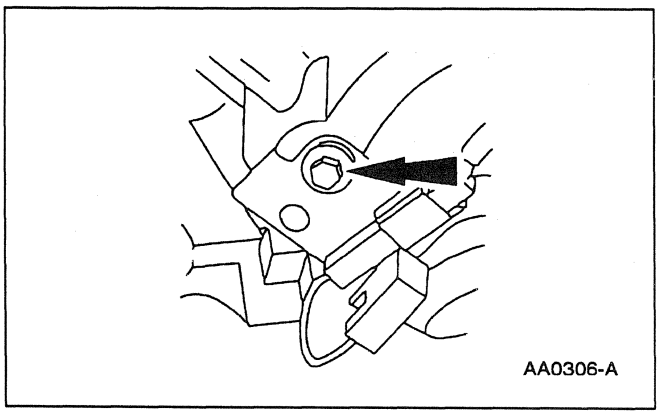

26. Remove the bolt from the RH radio ignition interference capacitor (18801) .

DISASSEMBLY AND ASSEMBLY (Continued)

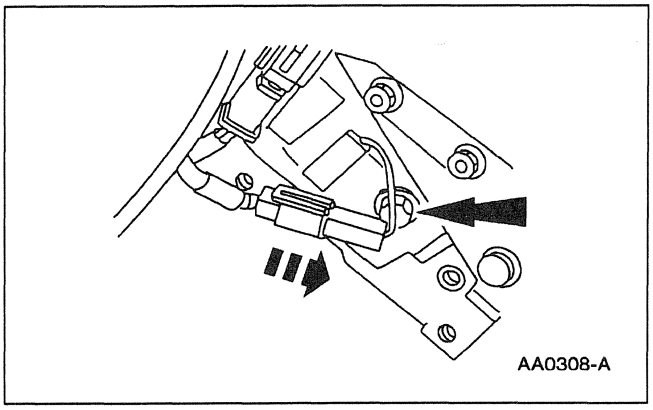

27. Remove the bolt from the LH radio ignition interference capacitor .

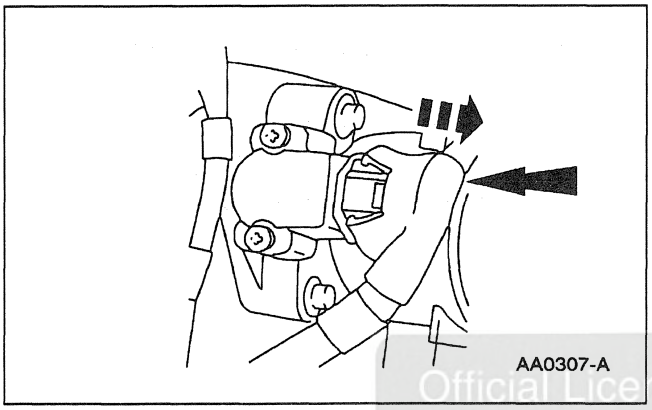

28. Disconnect the connector from the throttle position sensor (TP sensor)(9B989) .

Official Licensed Product
Ford Motor Company

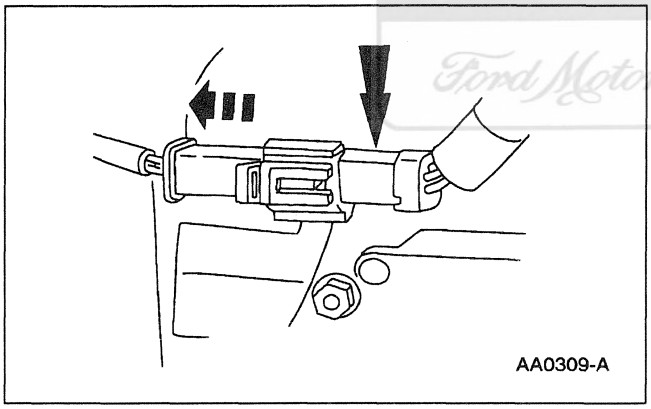

29. Disconnect the connector from the heated oxygen sensor (HO2S)(9F472) .

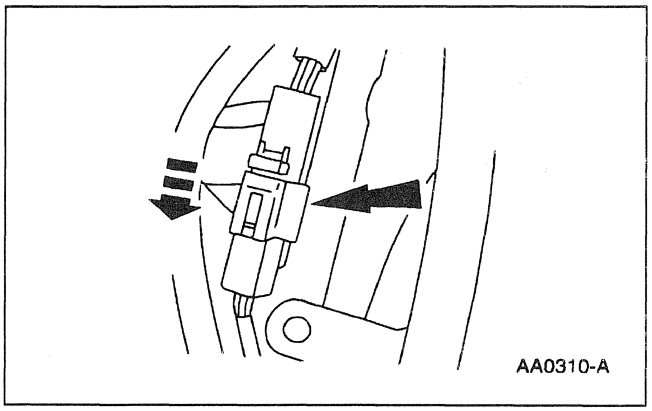

30. Disconnect the connector from knock sensor (KS)(12A699) .

DISASSEMBLY AND ASSEMBLY (Continued)

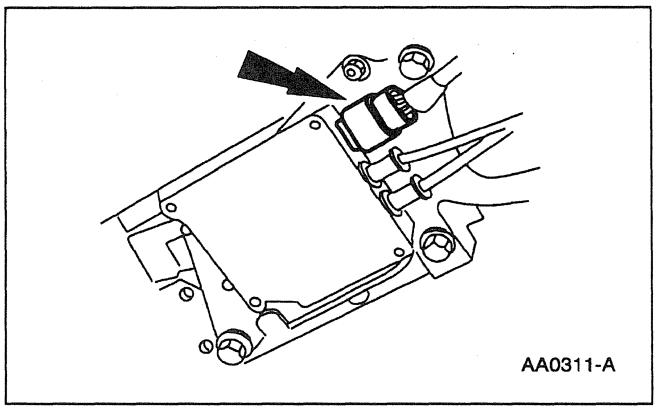

31. Disconnect the connector from the IMRC actuator and bracket assembly.

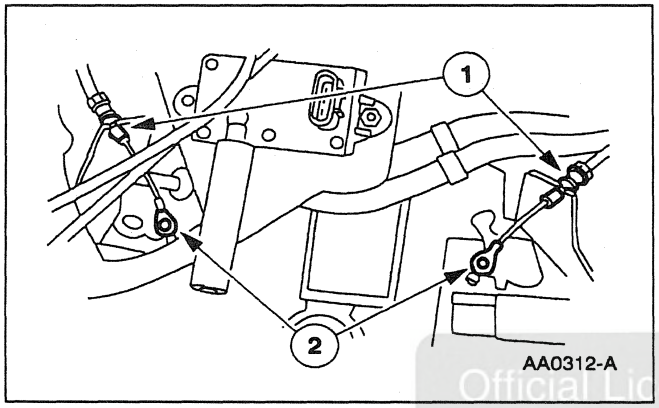

32. Disconnect the intake manifold runner control actuator cable.
    1 Disconnect the cable from the intake manifold runner control housing 2 cable bracket.
    2 Disconnect the cable from the lever.

Official Licensed Product
Ford Motor Company

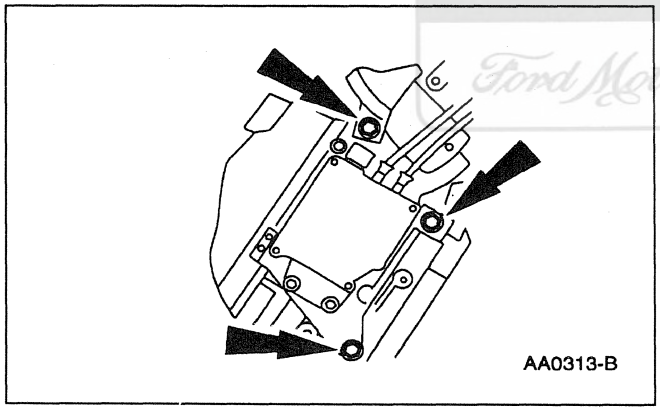

33. Remove the bolts from the IMRC actuator and bracket assembly.

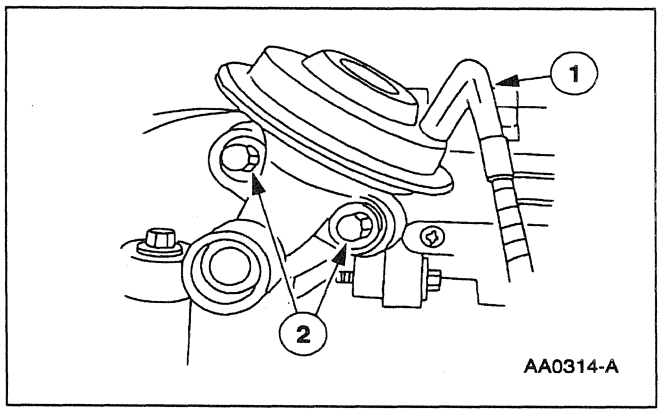

34. If necessary, remove the EGR valve (EGR valve)(9D475) .
    1 Remove the vacuum hoses.
    2 Remove the retaining bolts.

DISASSEMBLY AND ASSEMBLY (Continued)

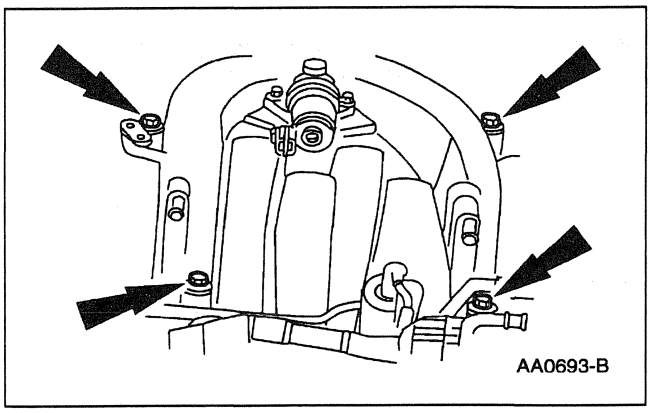

35. Remove the bolts from the upper upper intake manifold.

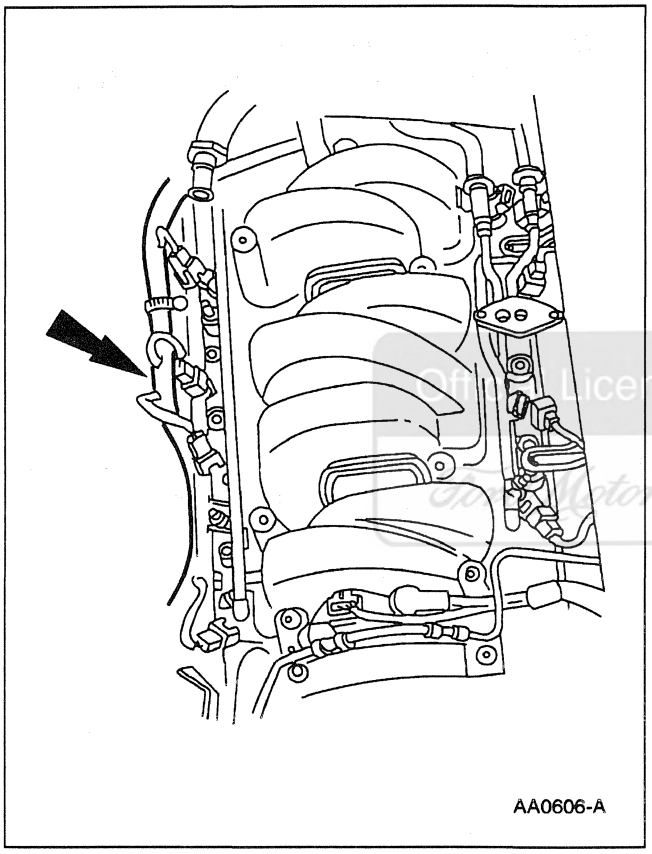

36. Disconnect the fuel injector wiring.

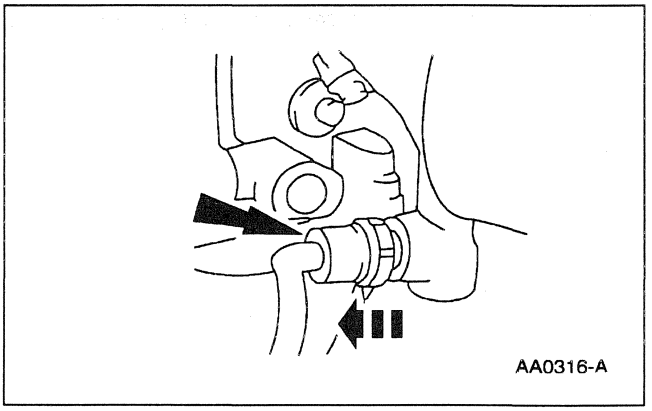

37. Disconnect the connector from the oil pressure sensor (9278) .

Ford Motor Company Licensed Product

DISASSEMBLY AND ASSEMBLY (Continued)

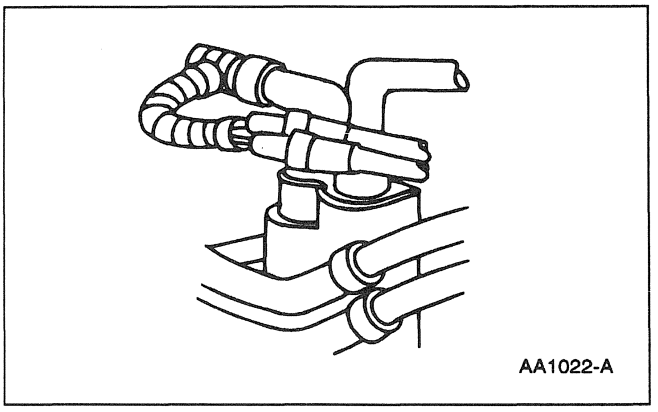

38. Disconnect the chassis vacuum hose from the lower intake manifold.

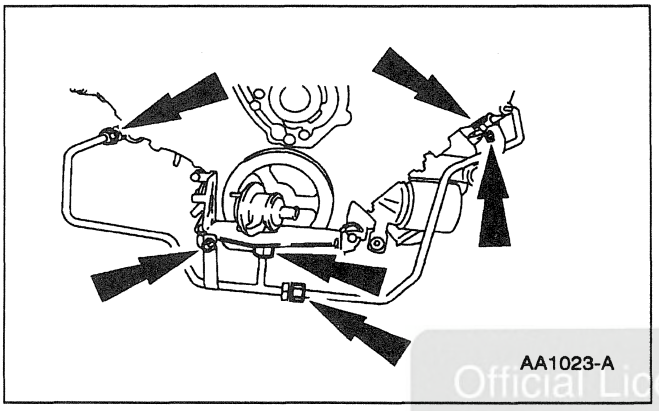

39. Disconnect the tube from both the exhaust manifold and the secondary air injection diverter valve .

Official Licensed Product
Ford Motor Company

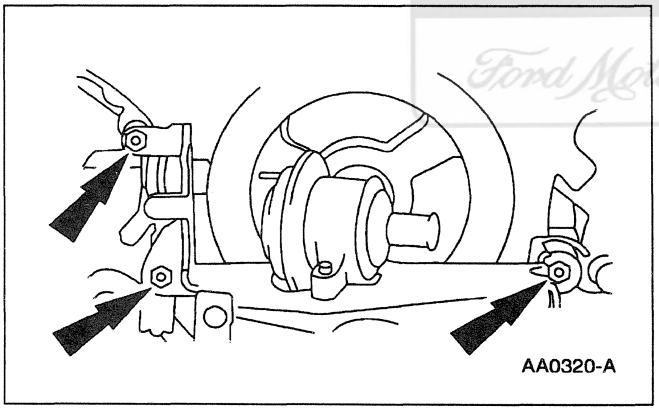

40. Remove the nuts from the bracket and remove the secondary air injection diverter valve .

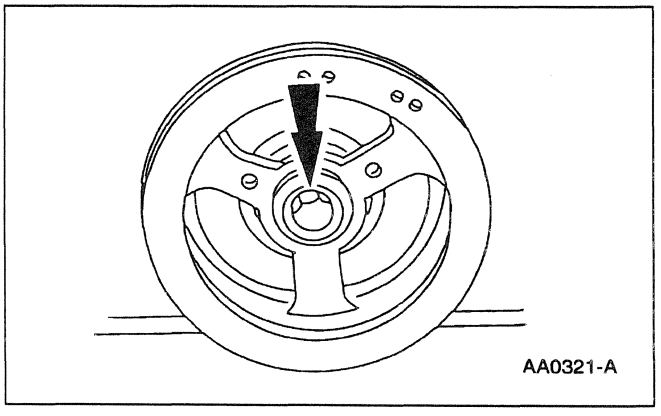

41. Remove the bolt from the crankshaft pulley (6312)

DISASSEMBLY AND ASSEMBLY (Continued)

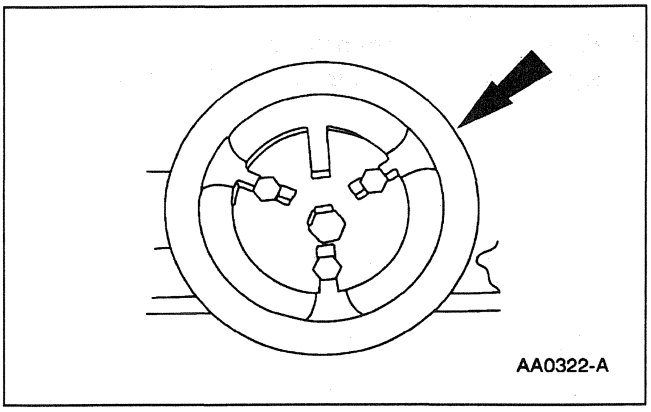

42. Remove the crankshaft pulley using the Crankshaft Damper Remover.

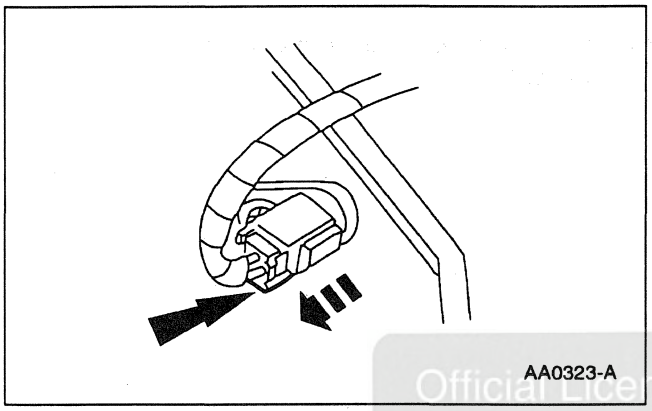

43. Disconnect the connector from the camshaft position sensor (CMP sensor)(6B288) .

Official Licensed Product
Ford Motor Company

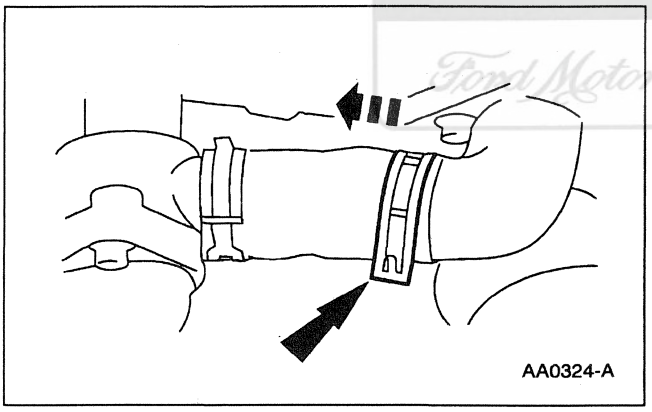

44. Remove the hose clamp and disconnect hose from the coolant inlet.

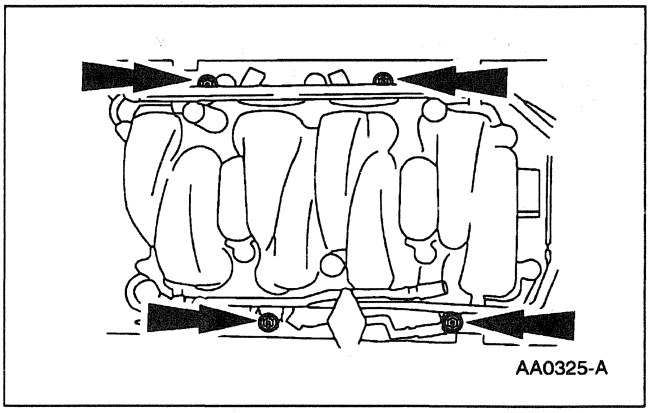

45. Remove the bolts from the fuel rail and remove the fuel injection supply manifold (9F792) with fuel injectors.

DISASSEMBLY AND ASSEMBLY (Continued)

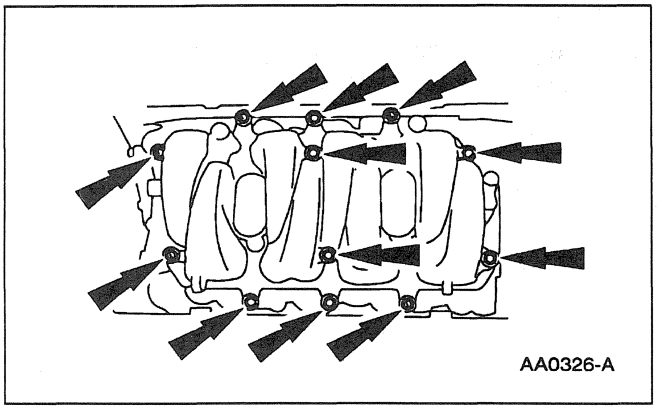

46. Remove the bolts from the lower intake manifold and remove the lower intake manifold (9424) .

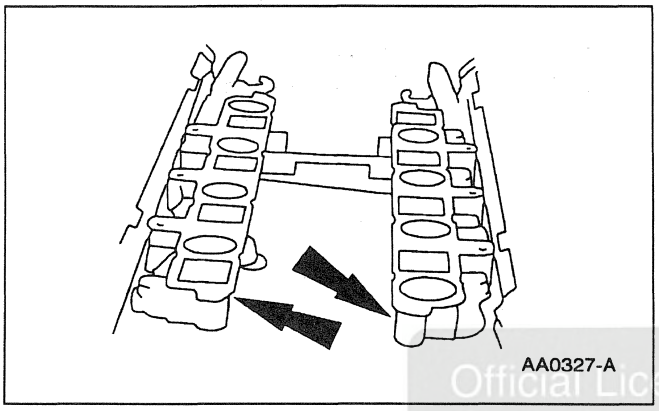

47. Remove the intake manifold runner control units (IMRC).

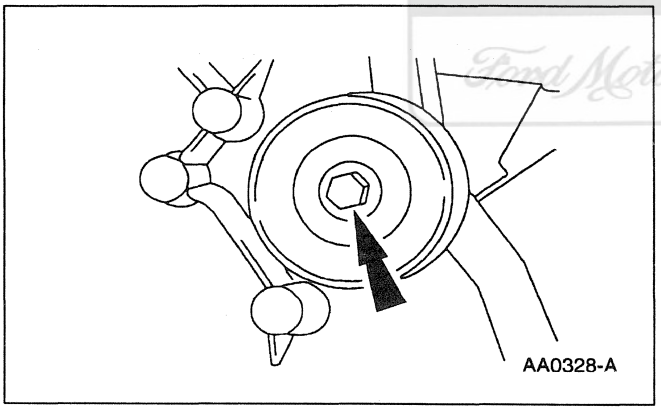

48. Remove the bolt from the belt idler pulley and remove the belt idler pulley (8678) .

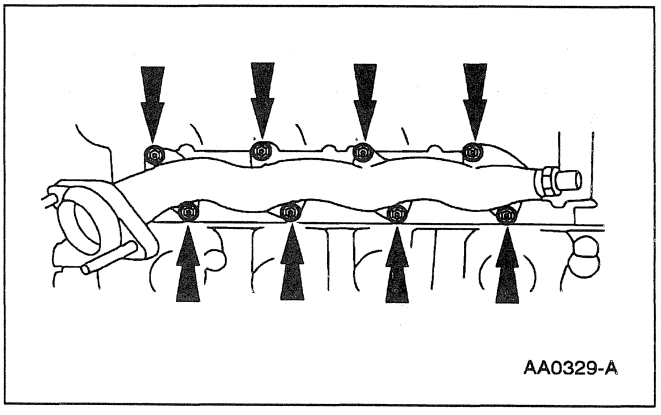

49. Remove the bolt nuts from the RH exhaust manifold and remove the RH exhaust manifold (9430) .

Official Licensed Product
Ford Motor Company

DISASSEMBLY AND ASSEMBLY (Continued)

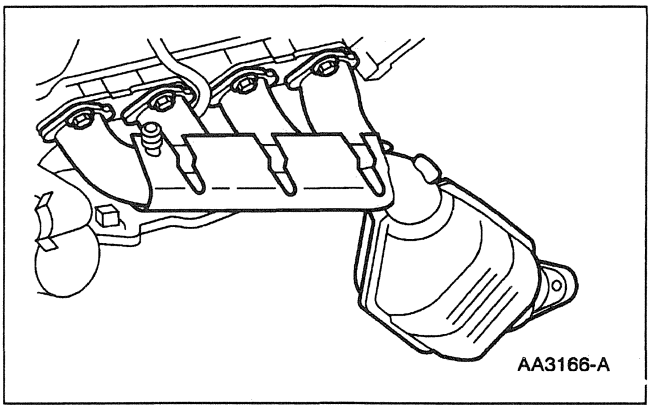

50. Remove the nuts from the LH exhaust manifold and remove the LH exhaust manifold .

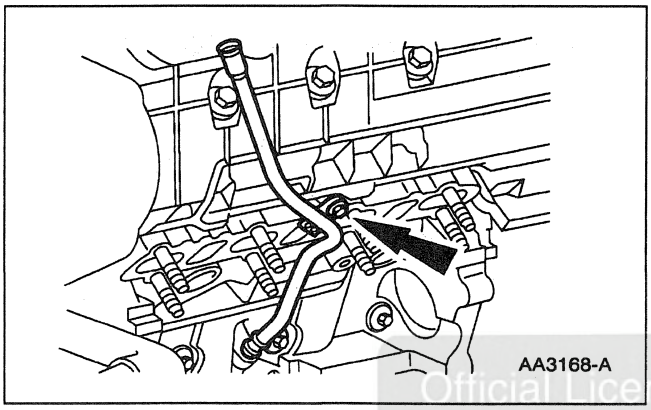

51. Remove the nuts from the oil level indicator tube and remove the oil level indicator tube (6754) .

Official Licensed Product
Ford Motor Company

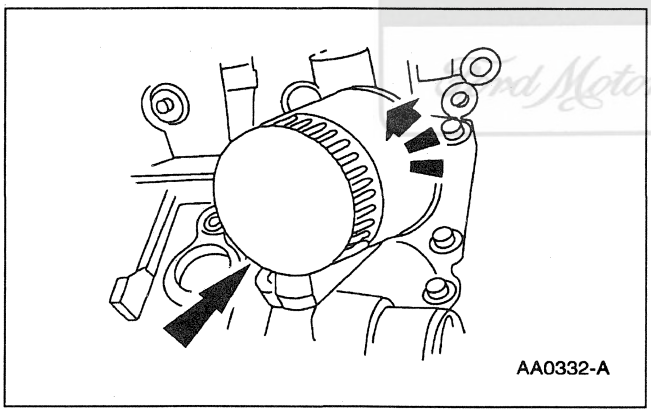

52. Remove the oil bypass filter (6714) .

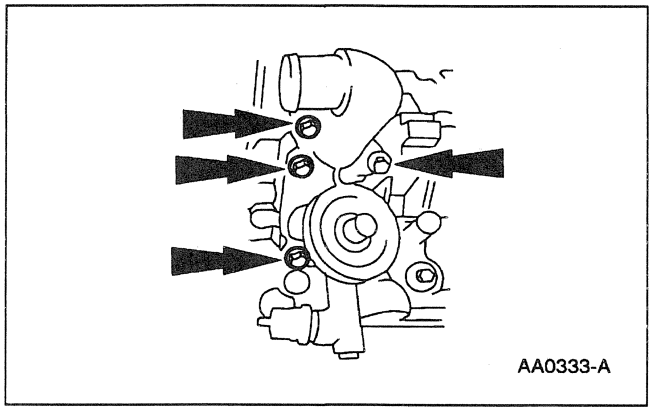

53. Remove the bolts from the oil filter adapter and remove the oil filter adapter (6881) .

DISASSEMBLY AND ASSEMBLY (Continued)

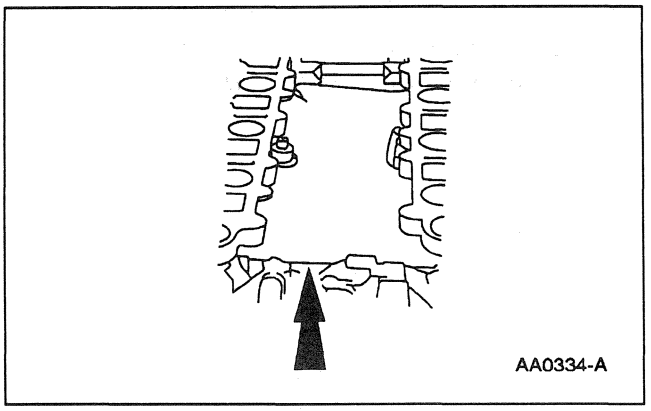

54. Remove the noise shield.

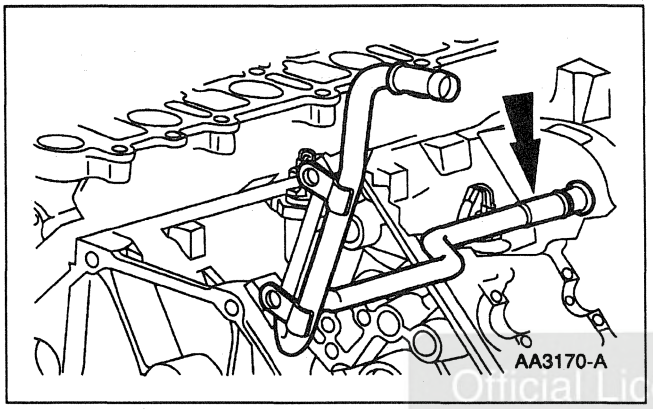

55. Remove the heater water hose (18472) from the water outlet tube.

Official Licensed Product
Ford Motor Company

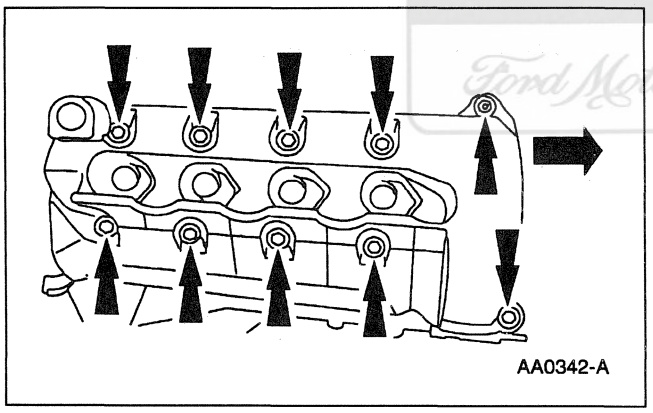

56. Remove the bolts from the RH valve cover (6582) and remove the RH valve cover .

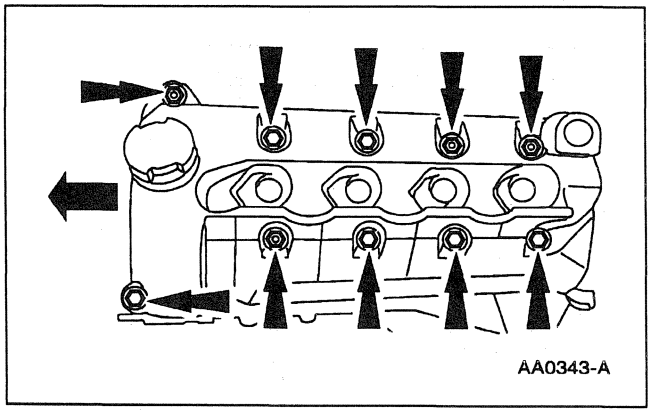

57. Remove the bolts from the LH valve cover and remove the LH valve cover .

DISASSEMBLY AND ASSEMBLY (Continued)

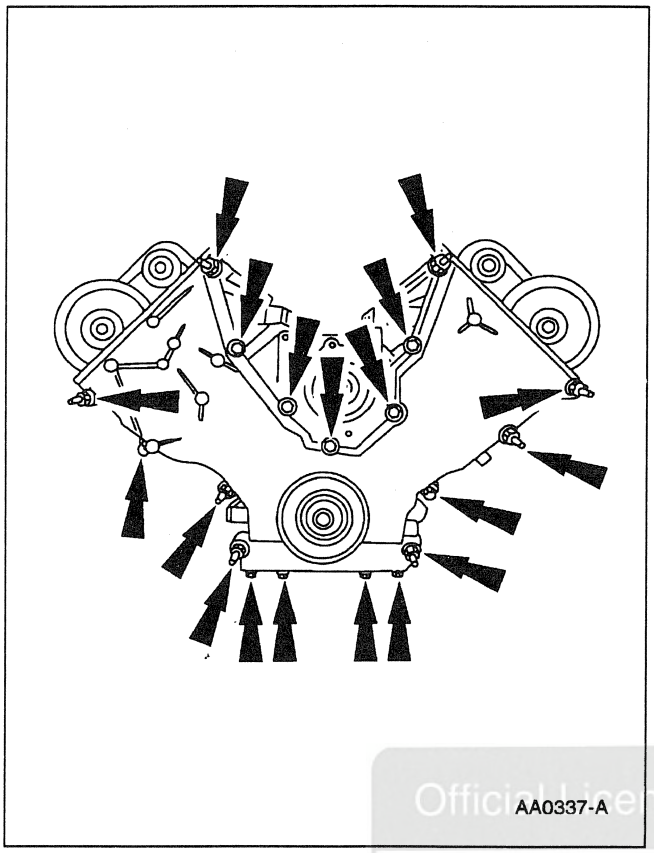

58. Remove the bolts from the engine front cover (6019) and the oil pan (6675) and remove the engine front cover .

Official Licensed Product
Ford Motor Company

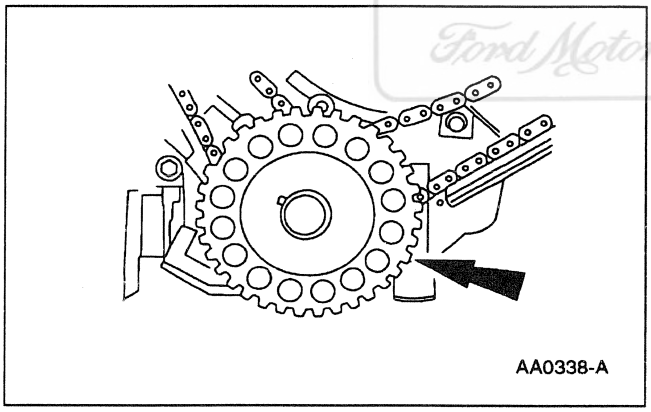

59. Remove the crankshaft position sensor (cap) pulse wheel.

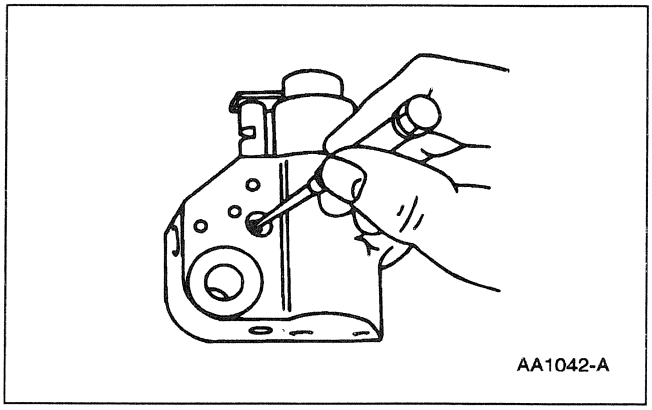

60. Release the rachet lock while the piston is being compressed.

DISASSEMBLY AND ASSEMBLY (Continued)

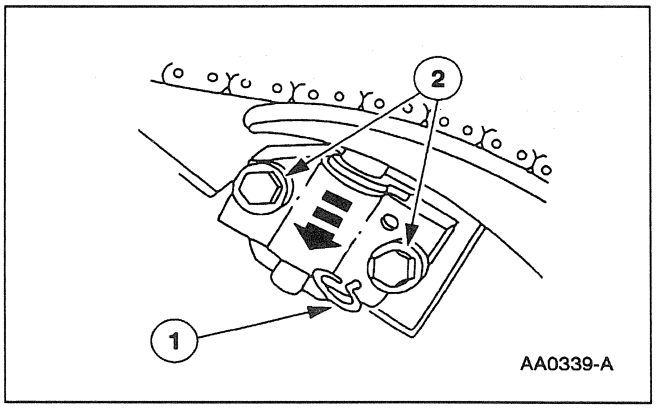

61. Remove the RH and LH timing chain tensioner (6L266) .
    1 Compress the timing chain tensioner and install the retaining pins.
    2 Remove the bolts and remove the timing chain tensioner .

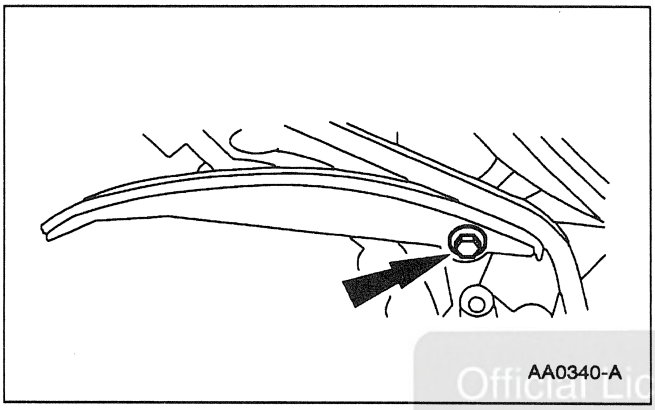

62. Remove the bolts from the RH and LH timing chain tensioner arms and remove the timing chain tensioner arm (6L253) , the camshaft sprocket (6256) and the timing chain/belt (6268) .

Official Licensed Product
Ford Motor Company

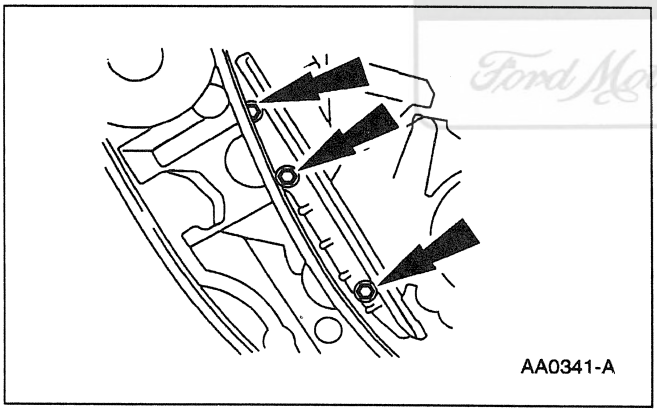

63. Remove the retaining bolts from the RH and LH timing chain tensioner arms and remove the timing chain guide (6K297) .

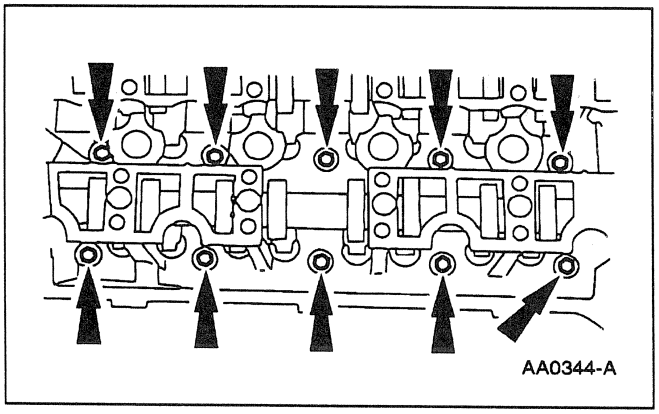

64. Remove the bolts from the RH and LH cylinder head (6049) and remove the cylinder heads .

DISASSEMBLY AND ASSEMBLY (Continued)

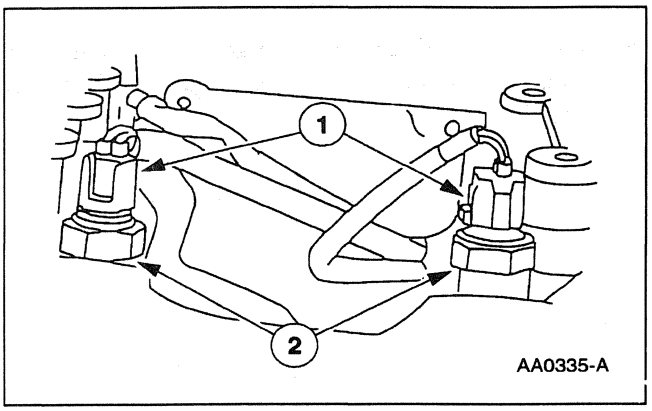

65. If necessary, remove the knock sensor .
    1 Disconnect the connector from the knock sensor .
    2 Remove the knock sensor from the cylinder block.

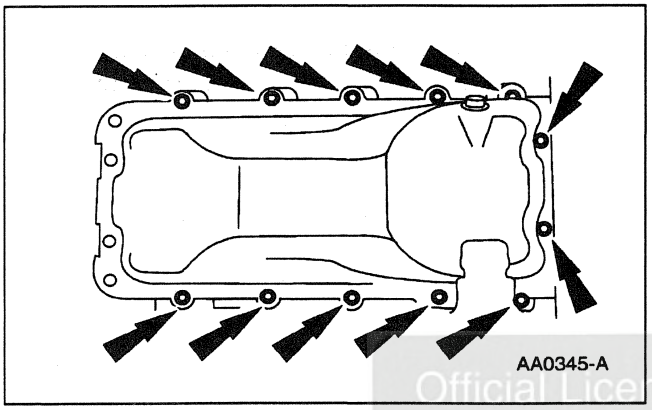

66. Remove the bolts from the oil pan and remove the oil pan .

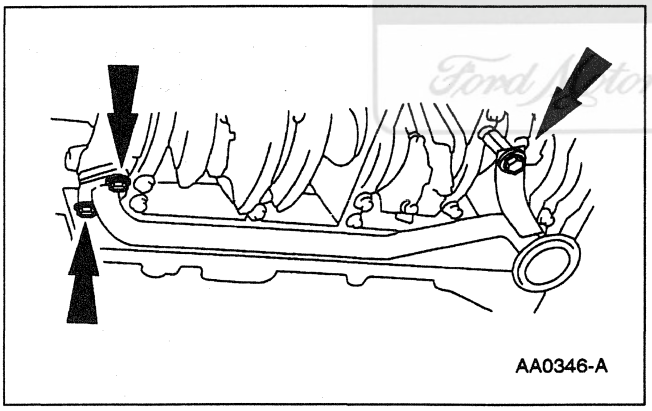

67. Remove the bolts from the oil pump screen and cover and remove the oil pump screen cover and tube (6622) and spacer.

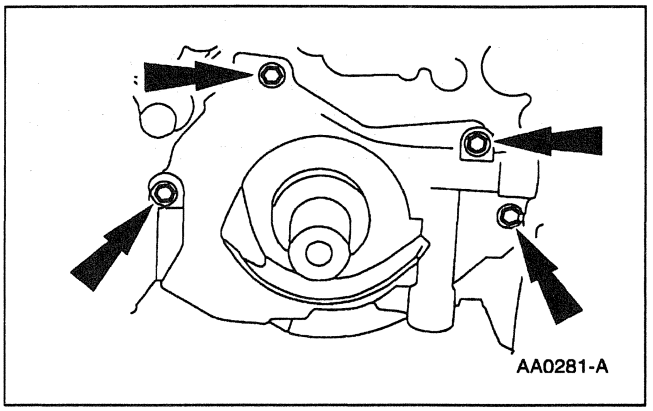

68. Remove the bolts from the oil pump and remove the oil pump.

Official Licensed Product
Ford Motor Company

DISASSEMBLY AND ASSEMBLY (Continued)

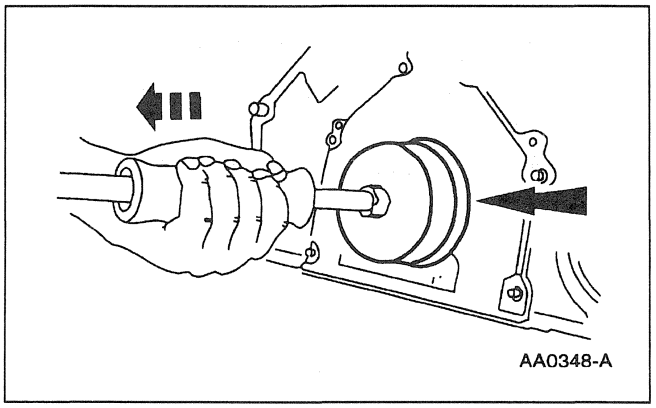

69. Use the Rear Crankshaft Slinger Remover and the Slide Hammer to remove the crankshaft oil slinger (6310).

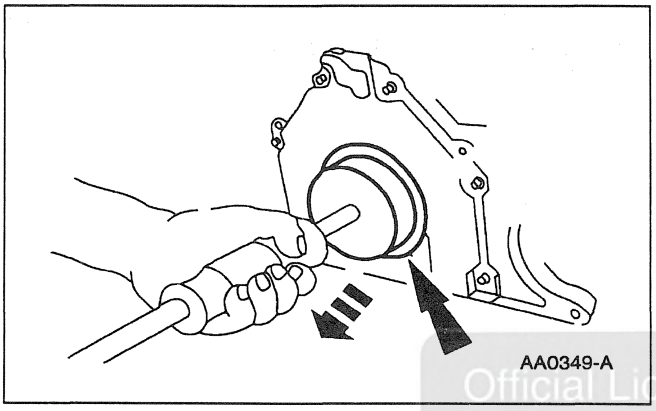

70. Use the Rear Crankshaft Seal Remover and the Slide Hammer to remove the crankshaft rear oil seal (6701).

Official Licensed Product
Ford Motor Company

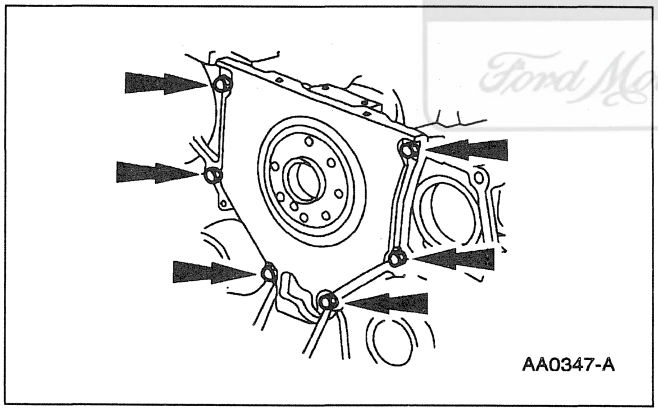

71. Remove the bolts for the rear oil seal retainer and remove the crankshaft rear oil seal retainer.

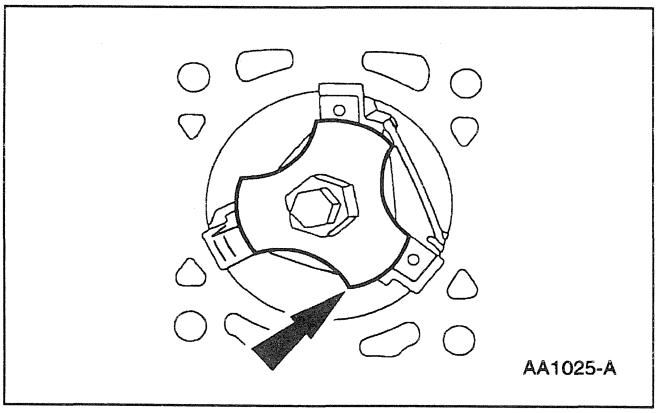

72. Before removing pistons, inspect the top of the cylinder bores. If necessary, remove the ridge or carbon deposits from each cylinder using Cylinder Ridge Reamer following manufacturer's instructions.

DISASSEMBLY AND ASSEMBLY (Continued)

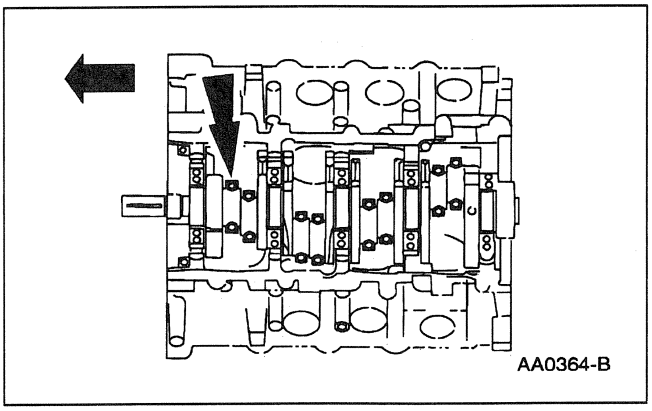

73. **NOTE:** Connecting rods and rod caps should be numbered to keep the proper orientation in the following sequence.

    Remove the bolts and the connecting rod caps for piston number 1 and 6.

74. Discard the 16 bolts.

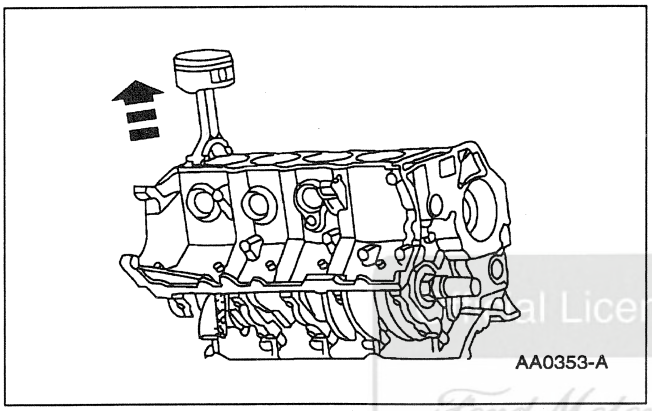

75. ⚠ **CAUTION: Do not scratch the cylinder walls or crankshaft journals with the connecting rod.**

    Use the Cylinder Rod Guide Tool to push the pistons number 1 and 6 through the top of the cylinder block.

Licensed Product
Ford Motor Company

76. To remove pistons 3 and 5, 4 and 7, 2 and 8, turn crankshaft 90 degrees and repeat steps 73-75.

DISASSEMBLY AND ASSEMBLY (Continued)

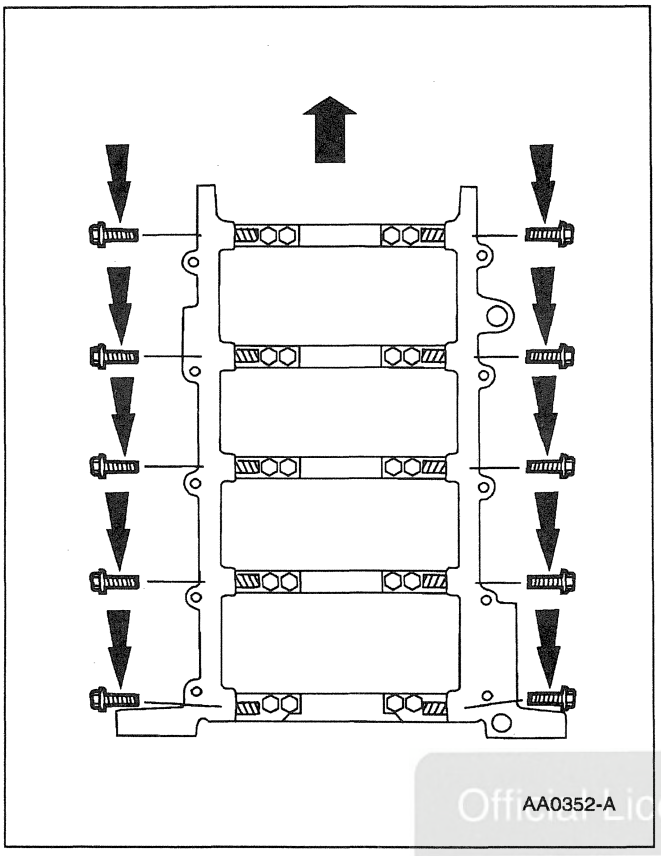

77. Remove the side bolts.

Official Licensed Product
Ford Motor Company®

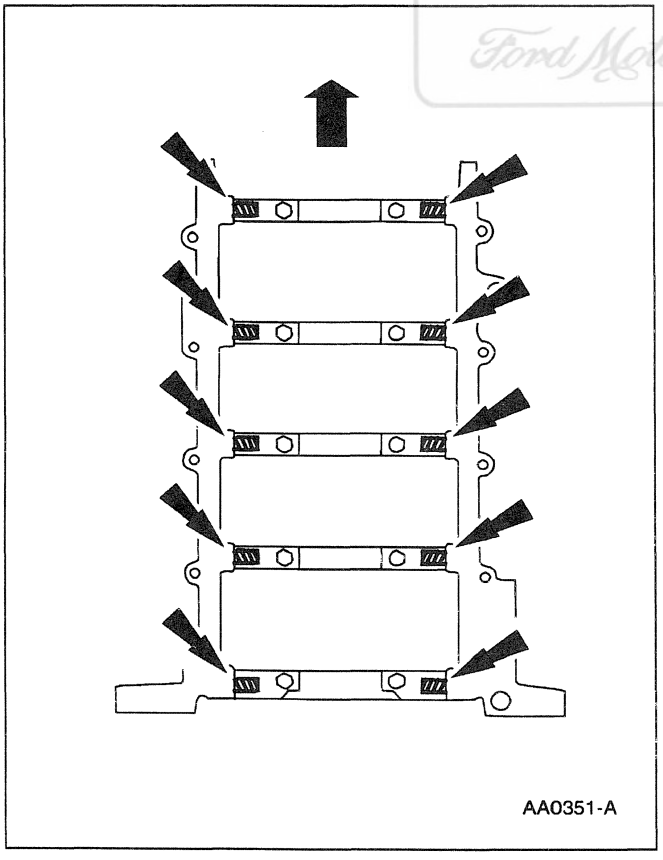

78. Loosen the jack screws.

DISASSEMBLY AND ASSEMBLY (Continued)

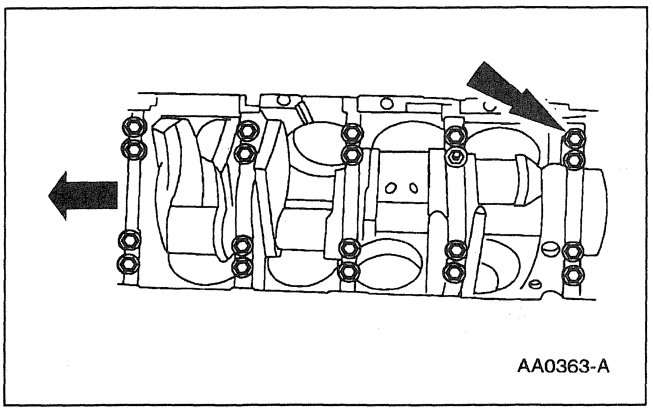

79. Remove and discard the bolts.

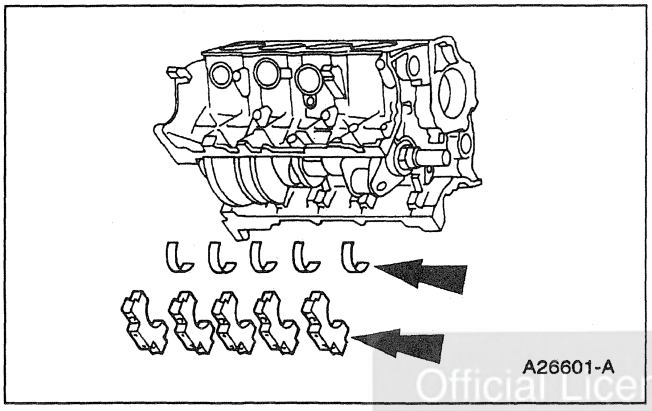

80. Remove the main bearing cap and the crankshaft main bearings (6333) from the cylinder block (6010).

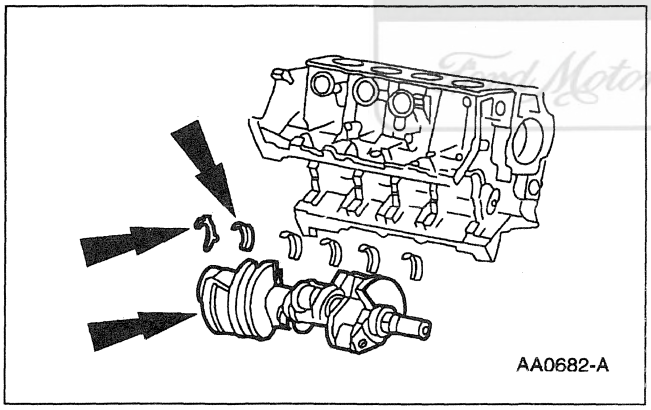

81. Remove the crankshaft (6303) , the crankshaft thrust washer (6334) , and the crankshaft main bearings from the cylinder block.

Official Licensed Product
Ford Motor Company

ASSEMBLY

Engine

Special Tool(s)

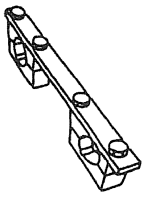 ST1715-A	Camshaft Holding Tool 303-446 (T93P-6256-AH)
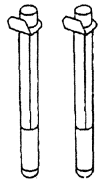 ST1337-A	Connecting Rod Guide 303-442 (T93P-6136-A)
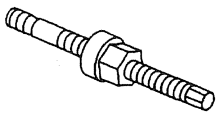 ST1287-A	Crankshaft Damper Replacer 303-102 (T74P-6316-B)
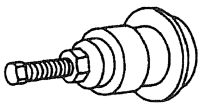 ST1719-A	Crankshaft Seal Replacer/Cover Aligner 303-335 (T88T-6701-A)
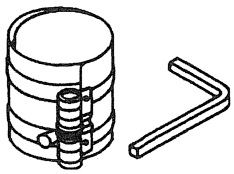	Piston Ring Compressor 303-D032 (D81L-6002-C) or equivalent

(Continued)

Special Tool(s)

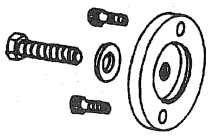 ST1480-A	Rear Crankshaft Seal Adapter 303-518 (T95P-6701-DH)
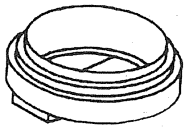 ST1479-A	Rear Crankshaft Seal Replacer 303-516 (T95P-6701-BH)
ST1482-A	Rear Crankshaft Slinger Replacer 303-517 (T95P-6701-CH)
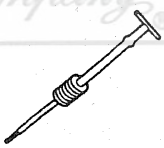 ST1185-A	Impact Slide Hammer 100-001 (T50T-100-A)

Official Licensed Product Ford Motor Company

1. **NOTE:** Before assembling the cylinder block, all sealing surfaces must be free from chips, dirt, paint and foreign material. Also, make sure the coolant and oil passages are clear.

   Lubricate and install the crankshaft main bearings into the cylinder block. Install the crankshaft main bearings into the main bearing caps.

   - Use clean engine oil meeting Ford specification WSS-M2C153-G.

ASSEMBLY (Continued)

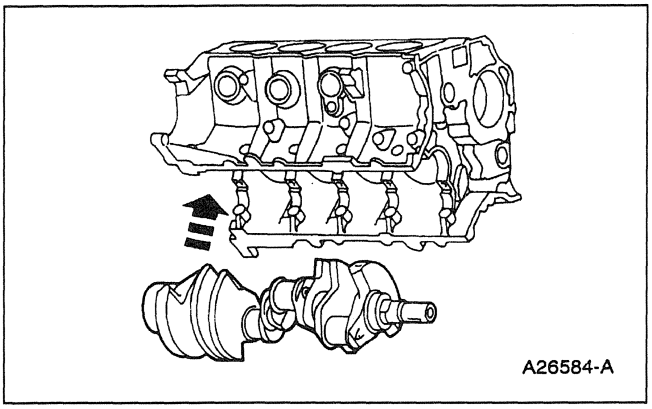

2. Install crankshaft into the cylinder block (6010).

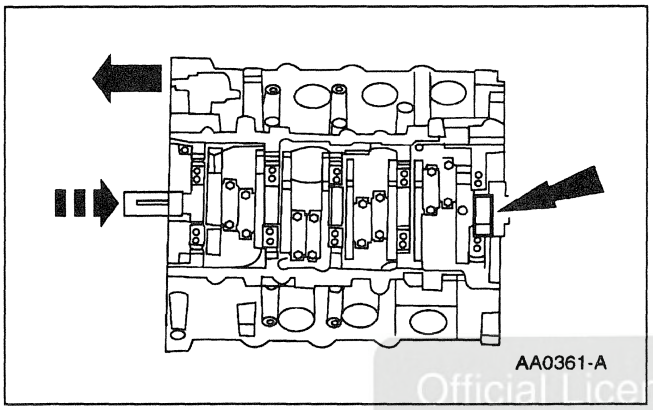

3. ⚠ **CAUTION: Make sure coated side of thrust washer with three 5 mm wide oil grooves faces the crankshaft thrust surface.**

   Push the crankshaft (6303) rearward and install the crankshaft thrust washer (6334) at the back of the No. 5 main boss.

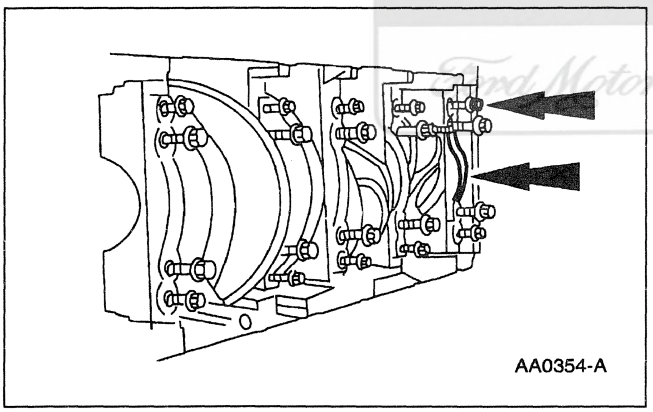

4. Loosely install the main caps and bolts.

Official Licensed Product
Ford Motor Company

ASSEMBLY (Continued)

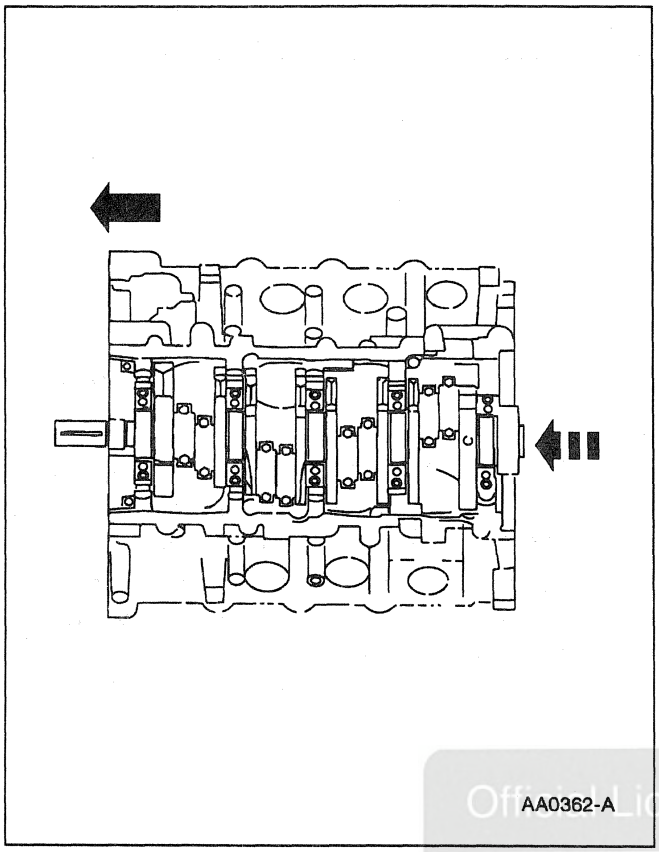

5. Push the crankshaft forward to seat the crankshaft thrust washer and hold the crankshaft in the forward position.

Official Licensed Product
Ford Motor Company®

6. Push the No. 5 main cap rearward and tighten.

ASSEMBLY (Continued)

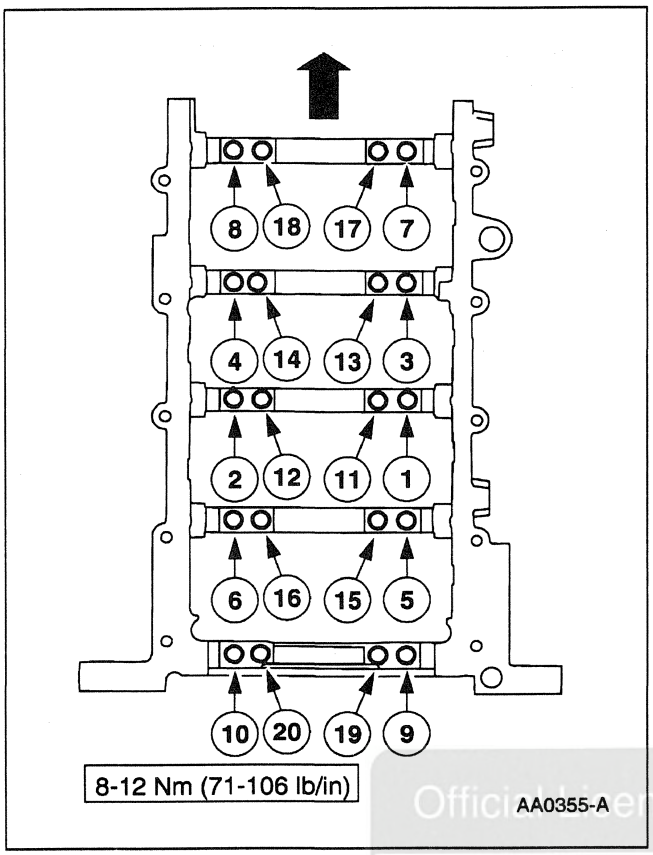

7. **NOTE:** Make sure to tighten the bolts in four steps.

   Tighten the bolts 1 thru 20 in the sequence shown.

Official Licensed Product
Ford Motor Company

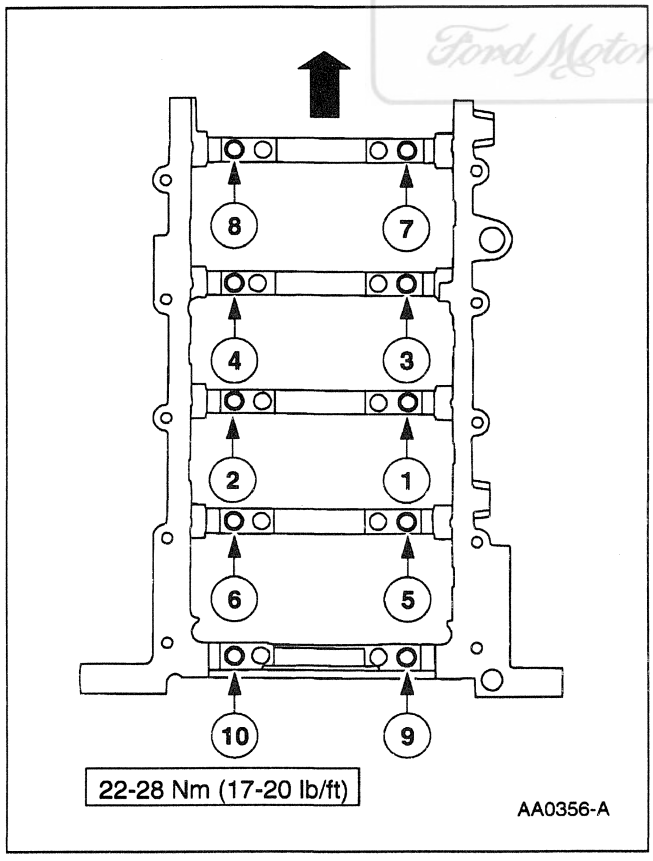

8. Tighten the bolts 1 thru 10 in the sequence shown.

ASSEMBLY (Continued)

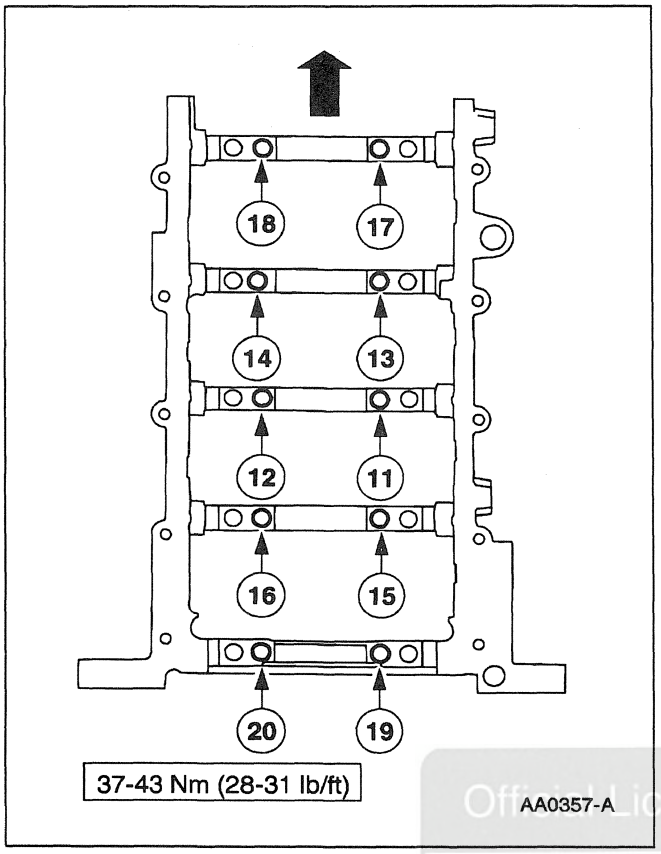

9. Tighten the bolts 11 thru 20 in the sequence shown.

Official Licensed Product
Ford Motor Company®

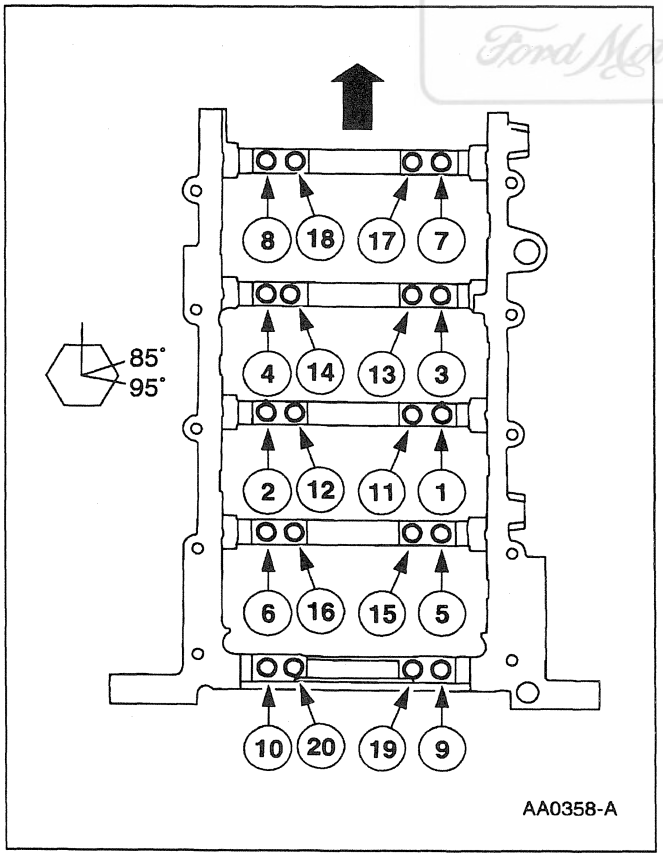

10. Tighten the bolts 1 thru 20 in the sequence shown.

ASSEMBLY (Continued)

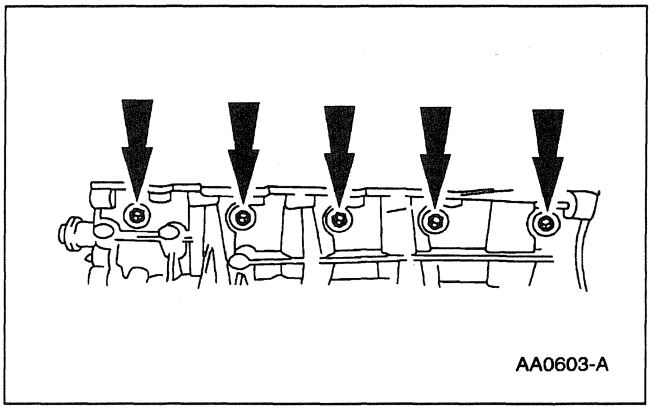

11. Turn the ten jack screws until fully seated in the main bearing cap.

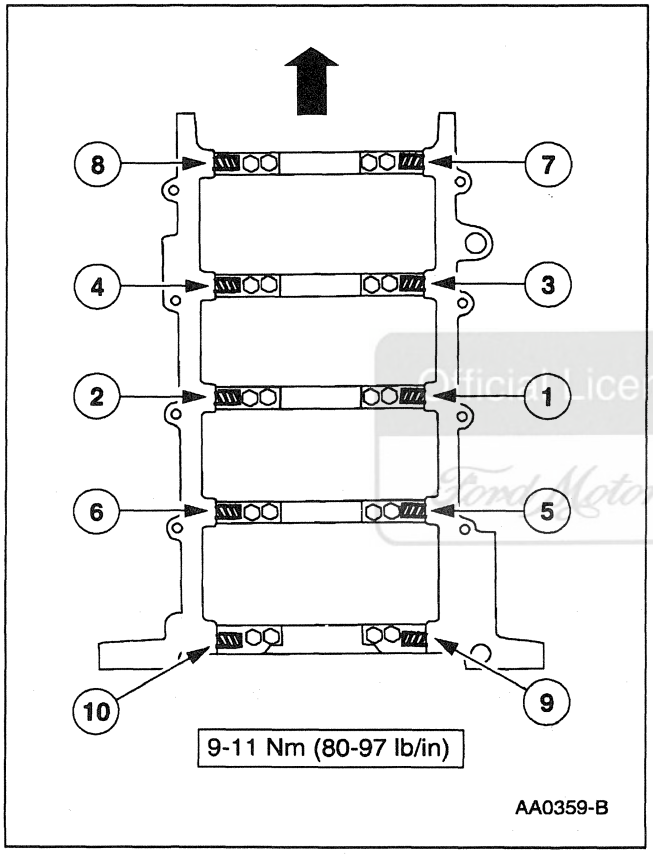

12. Install and tighten the jack screws in the sequence shown.

Official Licensed Product
Ford Motor Company

ASSEMBLY (Continued)

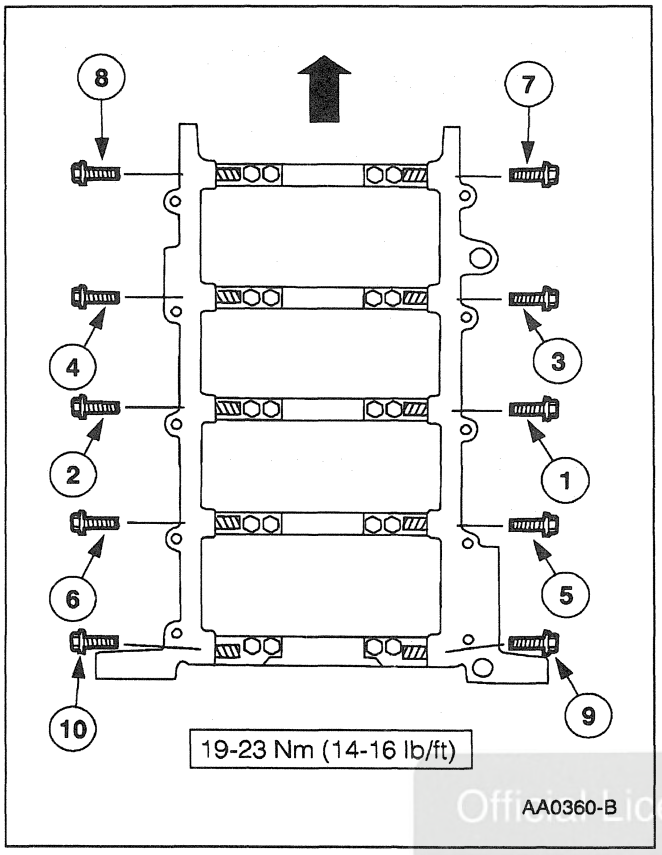

13. Install and tighten the cross-mounted bolts.

Official Licensed Product
Ford Motor Company

14. Check the crankshaft end play; refer to Crankshaft End Play in this section.

15. Rotate the crankshaft to make sure it turns freely.

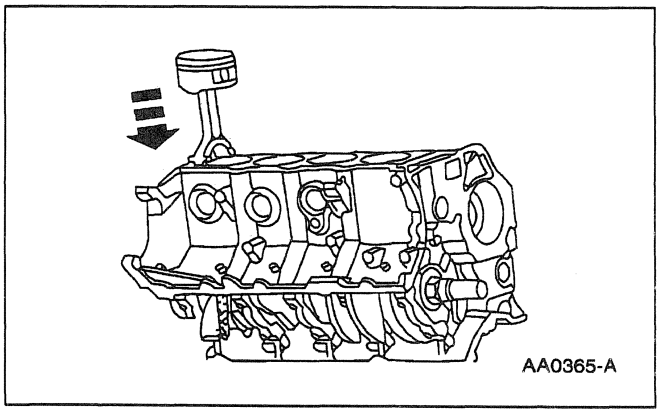

16. ⚠ **CAUTION: Do not scratch the cylinder walls or crankshaft journals with the connecting rod.**

    NOTE: Make sure the piston notch is facing forward.

    Use the Connecting Rod Guide and the Piston Ring Compressor to install the piston and connecting rod assembly.

    - Lubricate the piston and ring with engine oil.
    - Lubricate the rod bearings with engine oil.
    - Check ring orientation.

ASSEMBLY (Continued)

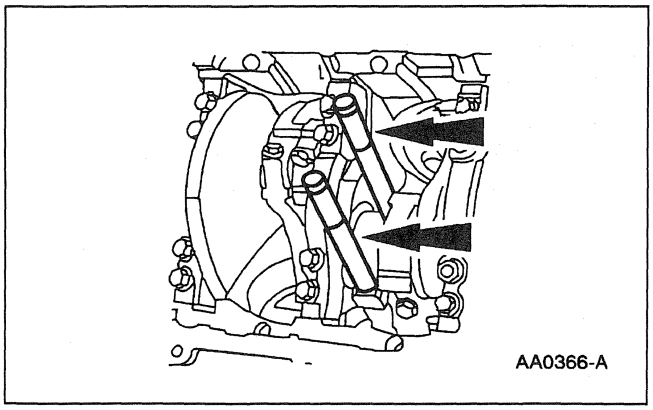

17. ⚠ **CAUTION: Do not scratch the cylinder walls or crankshaft journals with the connecting rod.**

    NOTE: Make sure the crankshaft is T.D.C.

    Remove the Connecting Rod Guide when the connecting rod is seated on the crankshaft journal.

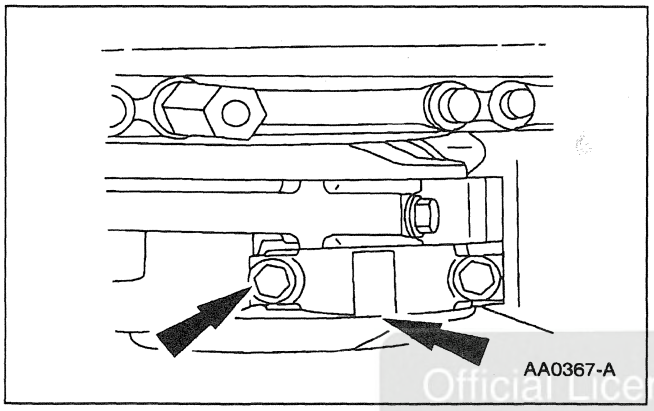

18. Install No. 1 and 6 pistons, rod and caps. Install bolts.

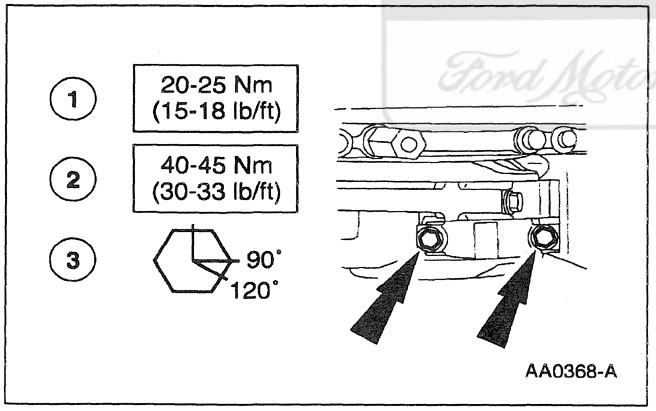

19. Tighten the bolts in the sequence shown.

20. To install No. 3 and 5, 4 and 7, 2 and 8, turn the crankshaft 90 degrees and repeat Steps 18 and 19.

21. Measure the connecting rod bearing journal clearance; refer to Connecting Rod—Bearing Journal Clearance in this section.

Official Licensed Product
Ford Motor Company

ASSEMBLY (Continued)

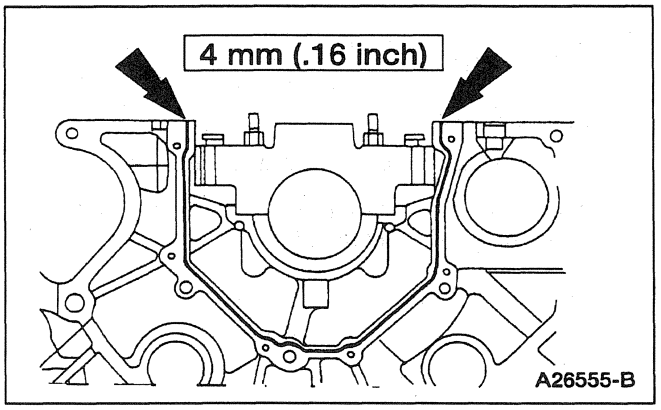

22. Apply silicone around the rear oil seal retainer sealing surface.
    - Use Silicone Gasket and Sealant F6AZ-19562-AA or equivalent meeting Ford specification WSE-M4G323-A6.

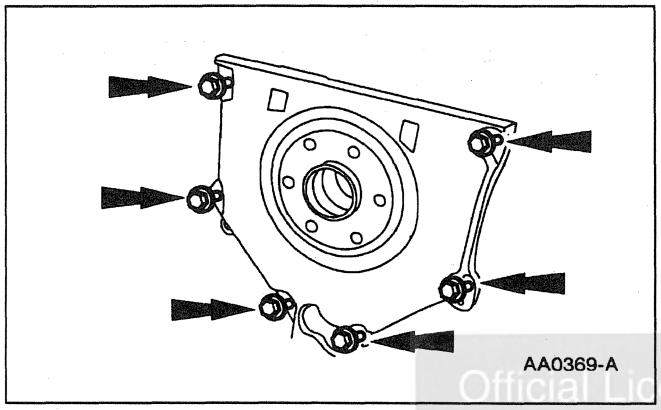

23. Install the crankshaft rear oil seal and retainer (6K301) and loosely install the bolts.

Official Licensed Product
Ford Motor Company

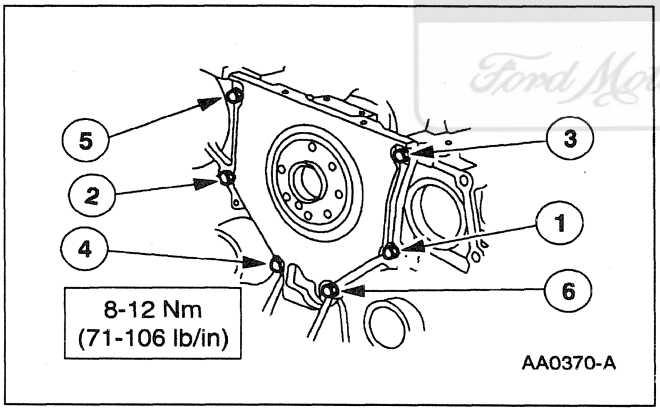

24. Tighten the six bolts in the sequence shown.

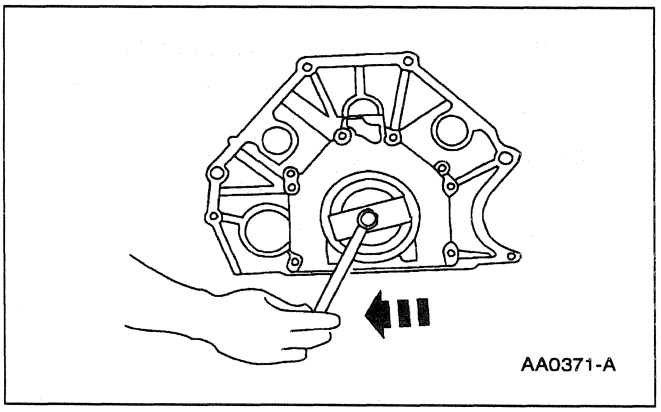

25. Use the Rear Crankshaft Seal Replacer and the Rear Crankshaft Seal Adapter to install the crankshaft rear oil seal (6701).

ASSEMBLY (Continued)

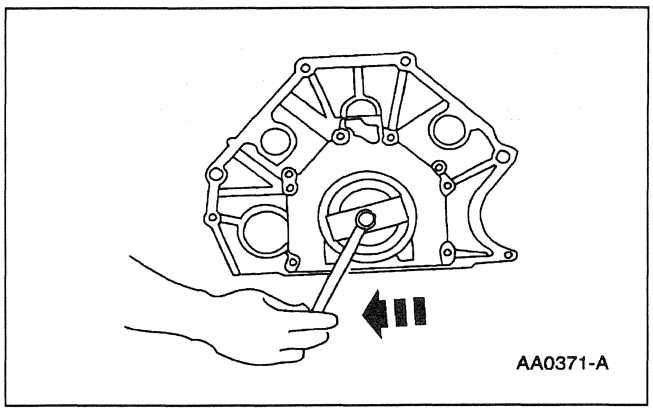

26. With the Rear Crankshaft Seal Adapter still installed, use the Rear Crankshaft Slinger Replacer and the Rear Crankshaft Seal Replacer to install the crankshaft oil slinger (6310).

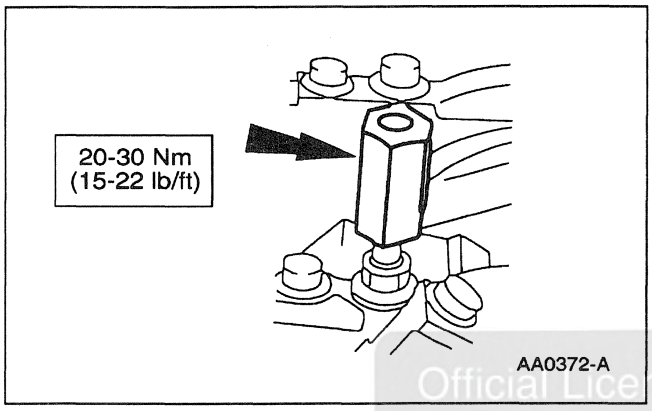

27. Install and tighten the oil pump screen and cover spacer.

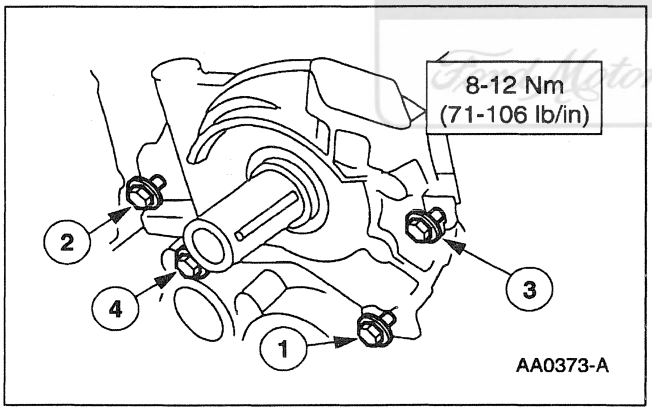

28. Position the oil pump (6600) and install the bolts in the sequence shown.

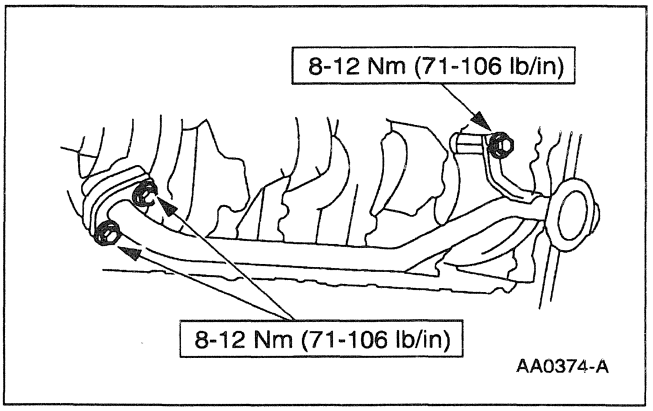

29. **NOTE:** Check O-ring on the oil pump pick up tube for tears or damage.

    Install oil pump screen cover and tube (6622) and install the bolts for the oil pump screen and cover.

Official Licensed Product

ASSEMBLY (Continued)

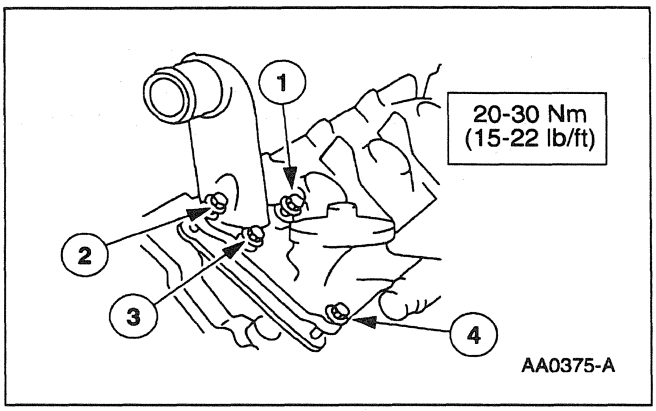

30. Install the oil filter adapter (6881) and the oil filter adapter gasket (6840) and install the bolts for the oil filter adapter in the sequence shown.

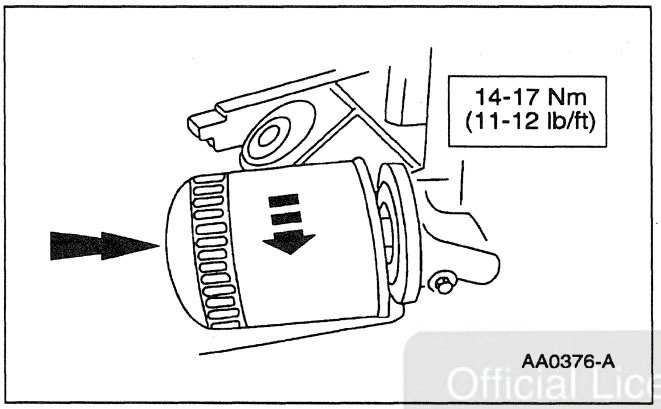

31. Install the oil bypass filter (6714).

Official Licensed Product
Ford Motor Company

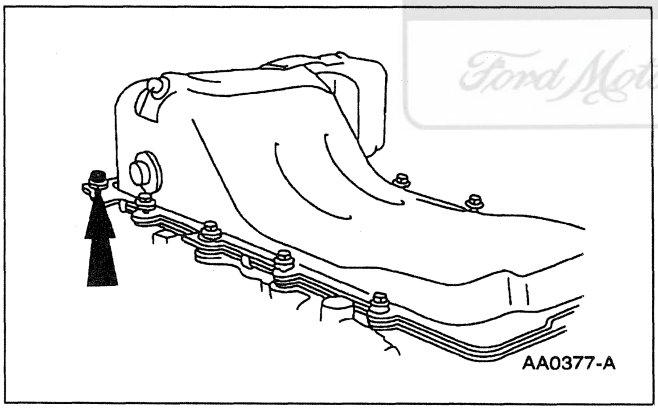

32. Apply Silicone Gasket and Sealant F6AZ-19562-AA meeting Ford specification WSE-M4G323-A6 to the parting lines. Install the oil pan (6675) and the oil pan gasket (6710). Loosely install the 12 bolts for the oil pan.

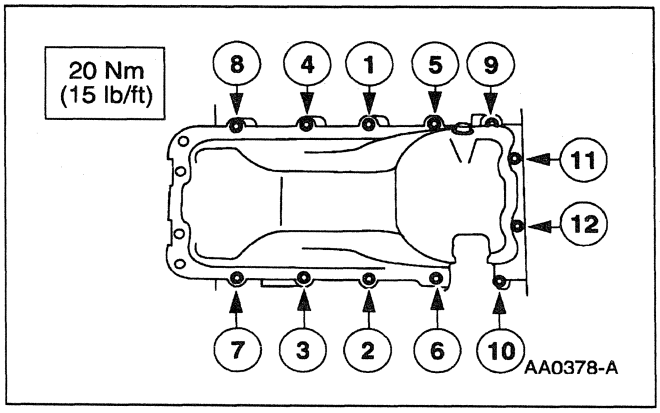

33. Tighten the bolts for the oil pan in the sequence shown.

ASSEMBLY (Continued)

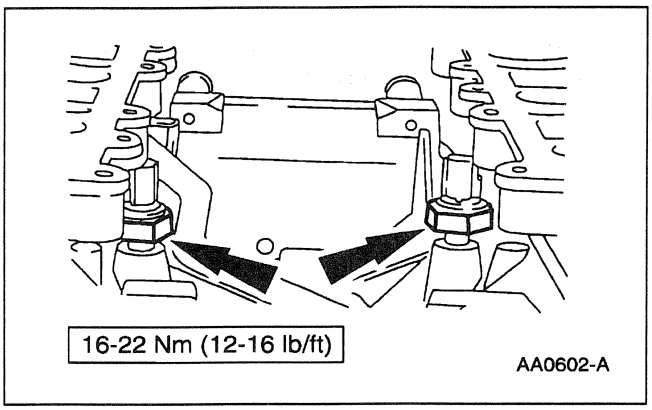

34. Install and tighten the knock sensor (KS)(12A699).

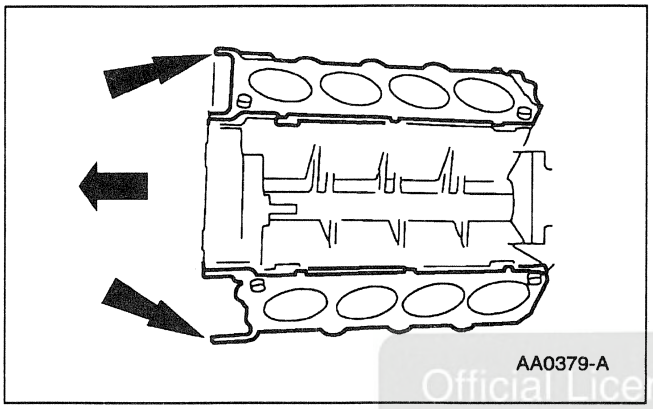

35. Install the head gasket (6051).

Official Licensed Product
Ford Motor Company

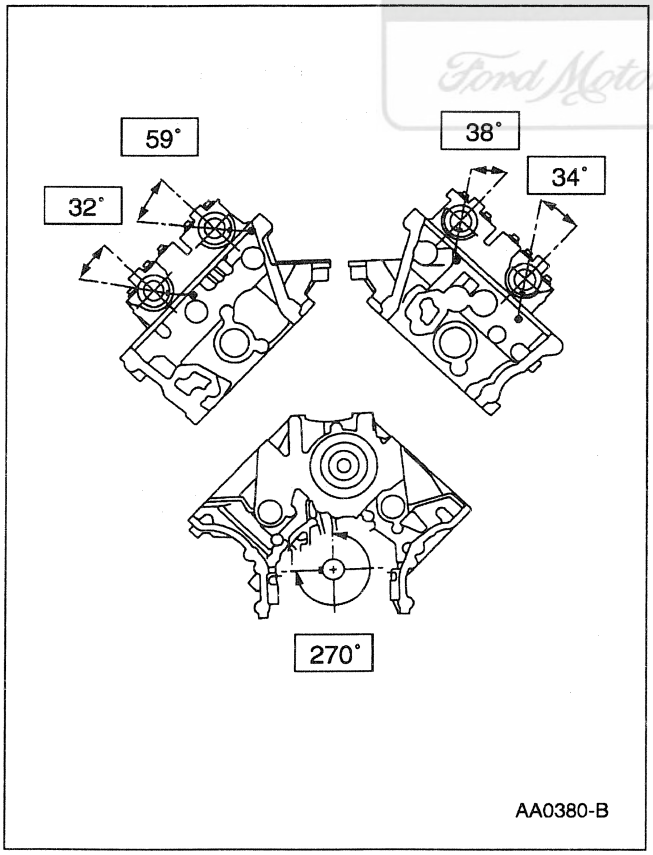

36. ⚠ **CAUTION: Make sure the crankshaft and the camshaft (6250) are positioned properly to prevent piston crown and valve damage.**

Position the crankshaft and the camshaft as shown.

ASSEMBLY (Continued)

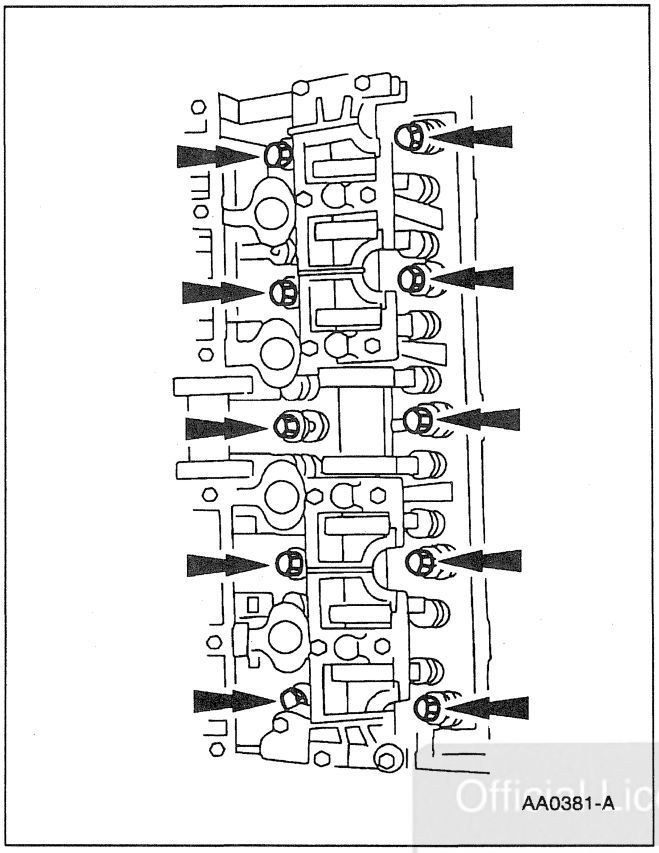

37. Install the LH cylinder head (6049) and the RH cylinder head. Loosely install new bolts.

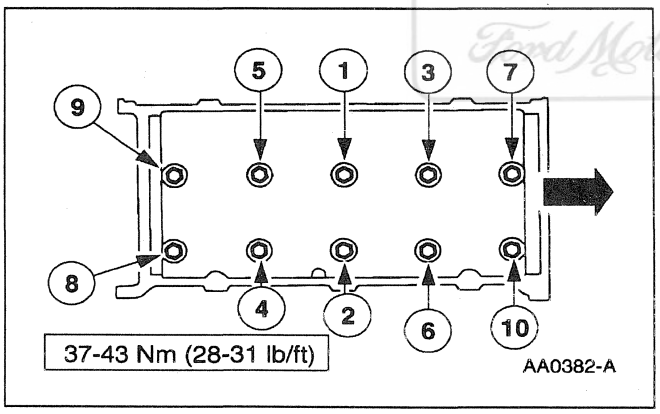

38. **NOTE:** Make sure to tighten the bolts in six steps. Tighten the RH bolts in the sequence shown.

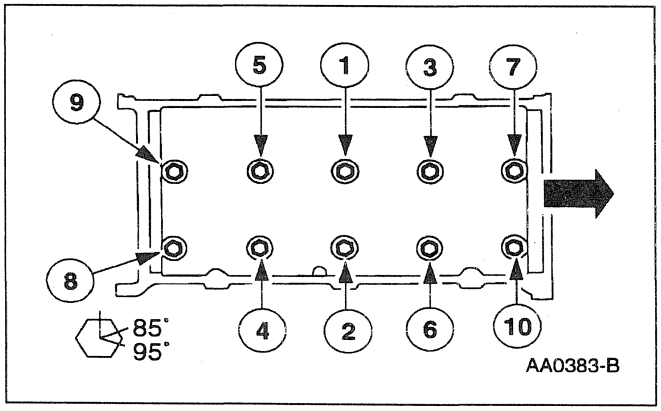

39. Tighten the RH bolts again in the sequence shown.

Official Licensed Product
Ford Motor Company

ASSEMBLY (Continued)

40. Loosen the RH bolts a minimum of one full turn.

41. Tighten the RH bolts in the sequence shown.

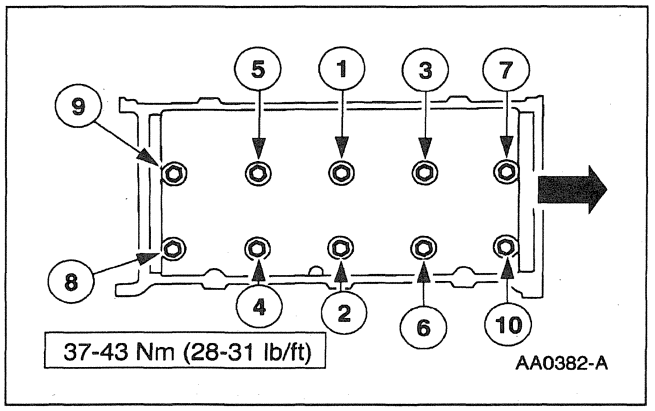

42. Tighten the RH bolts again in the sequence shown.

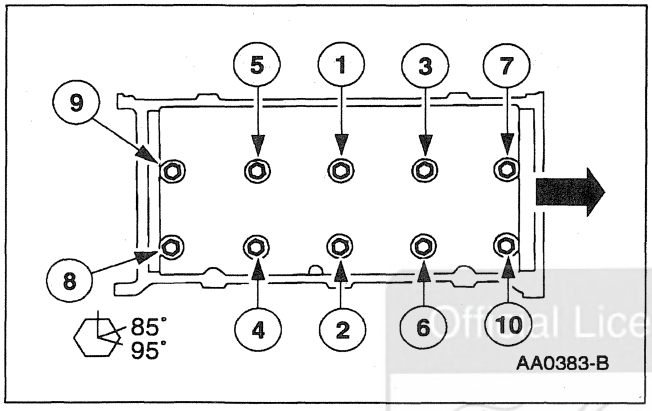

Official Licensed Product
Ford Motor Company

43. Tighten the RH bolts in the sequence shown.

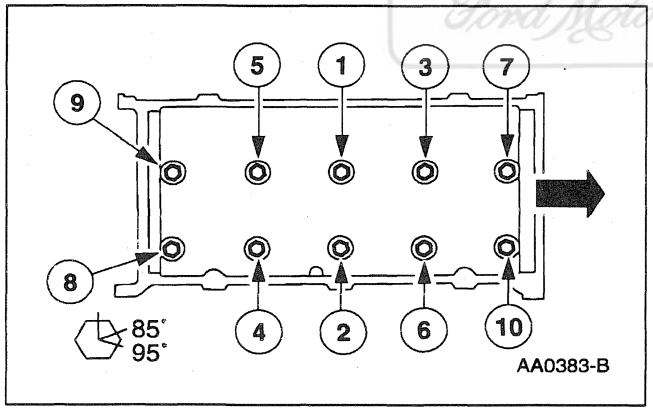

44. **NOTE:** Make sure to tighten the bolts in six steps. Tighten the LH bolts in the sequence shown.

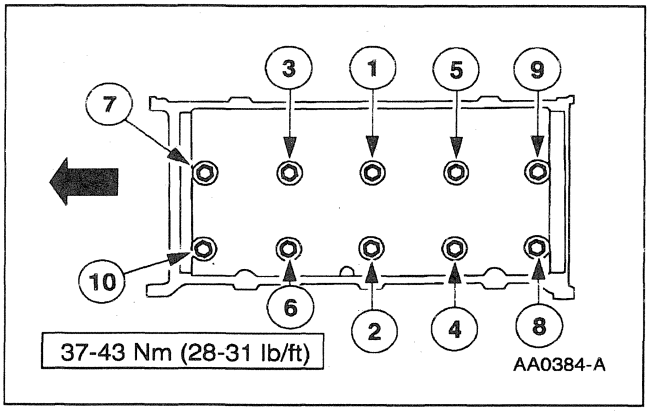

ASSEMBLY (Continued)

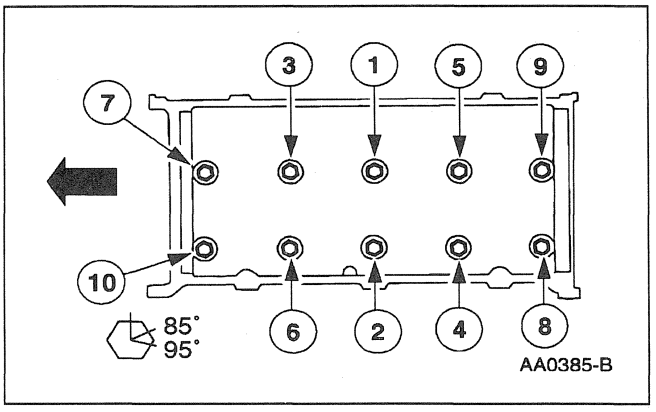

45. Tighten the LH bolts in the sequence shown.

46. Loosen the LH bolts a minimum of one full turn.

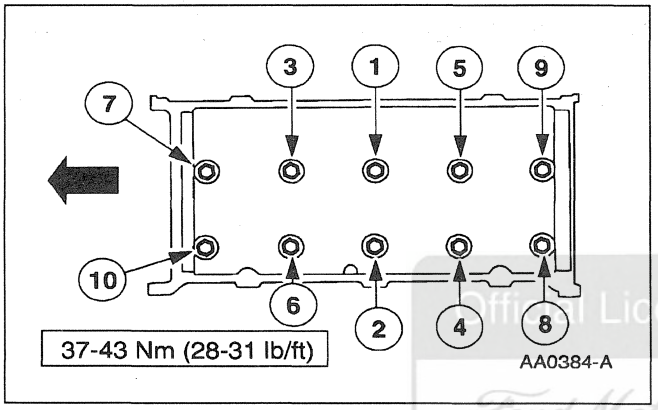

47. Tighten the LH bolts in the sequence shown.

Official Licensed Product
Ford Motor Company

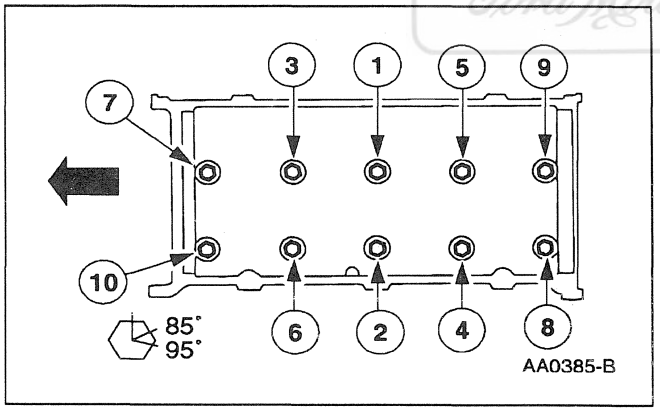

48. Tighten the LH bolts in the sequence shown.

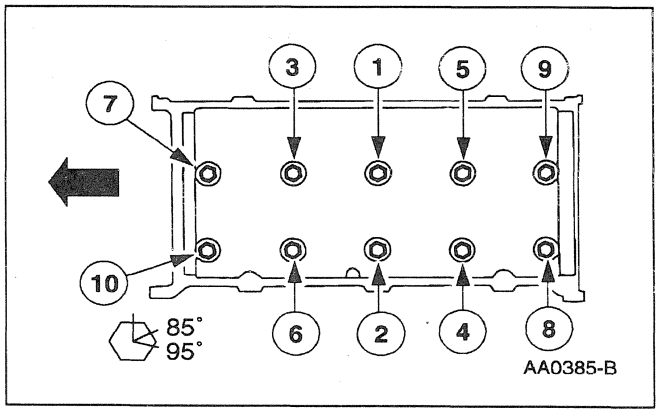

49. Tighten the LH bolts again in the sequence shown.

ASSEMBLY (Continued)

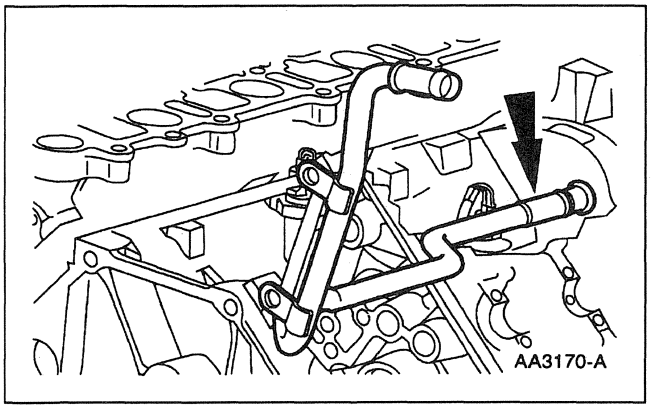

50. Install the heater water hose (18472) and connect to the water bypass tube.

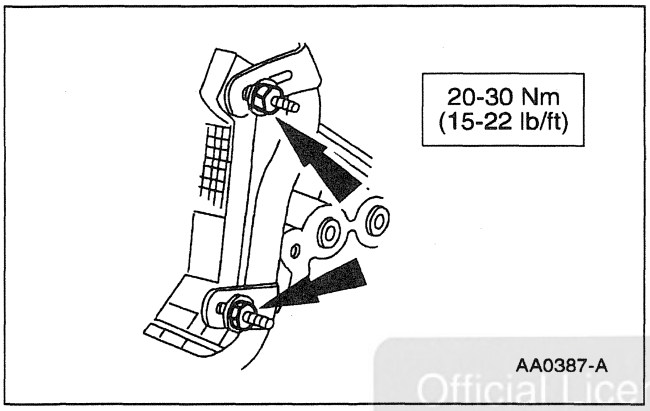

51. Install the bolts to the rear of the cylinder head.

Official Licensed Product
Ford Motor Company

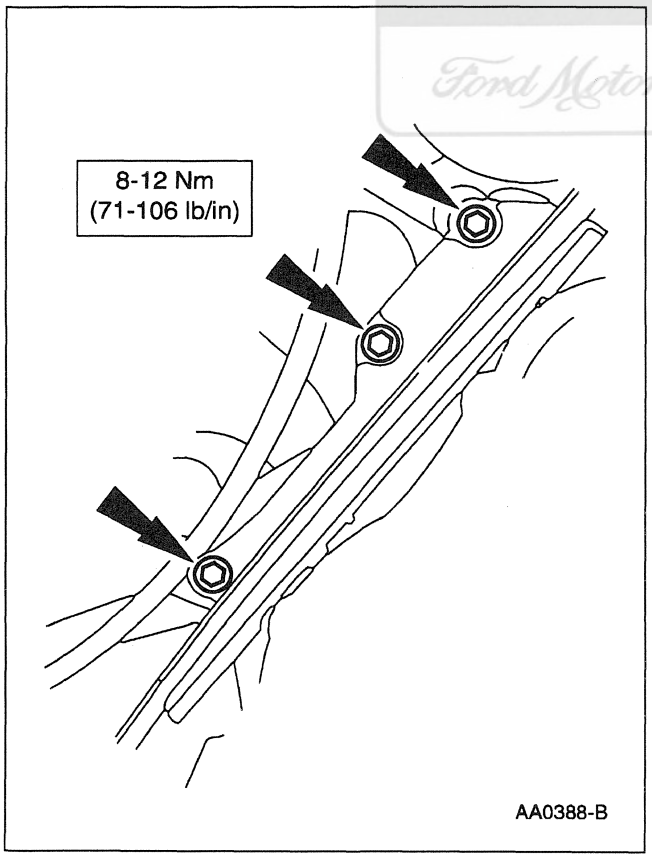

52. Install the RH and the LH timing chain guide (6K297).

ASSEMBLY (Continued)

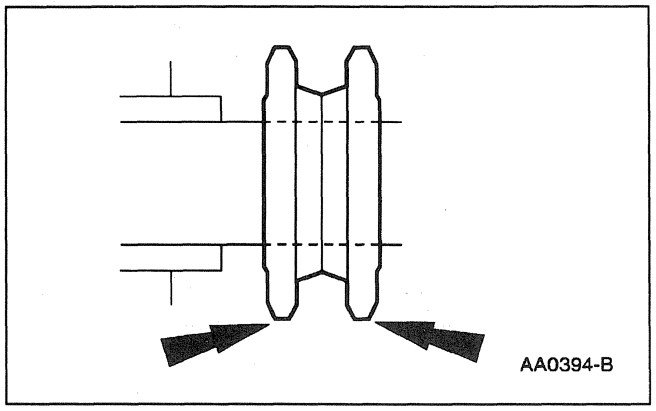

53. ⚠ **CAUTION: Timing chain procedures must be followed exactly or damage to valves and pistons will result.**

    Install the timing chain and crankshaft sprockets and make sure that the RH timing chain gear is in front of the LH timing chain gear with the hubs facing each other.

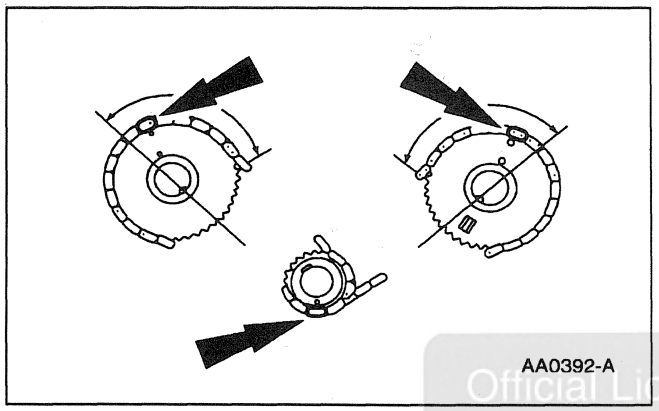

54. Check that the copper links on the timing chain/belts are lined up with the corresponding dots on the timing chain gears.

Official Licensed Product
Ford Motor Company

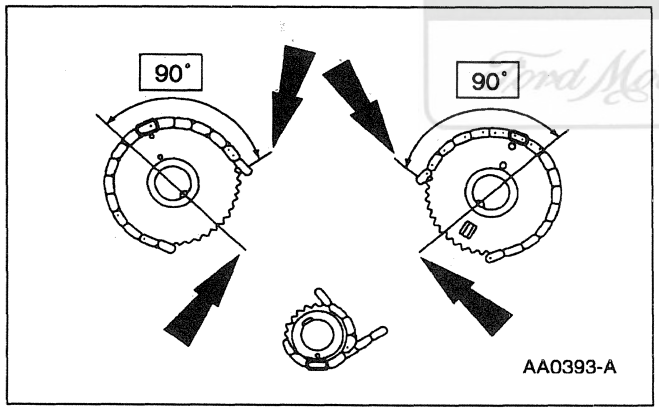

55. Check that the keyway on the camshafts sprocket are 90 degrees from the camshaft cover surface.

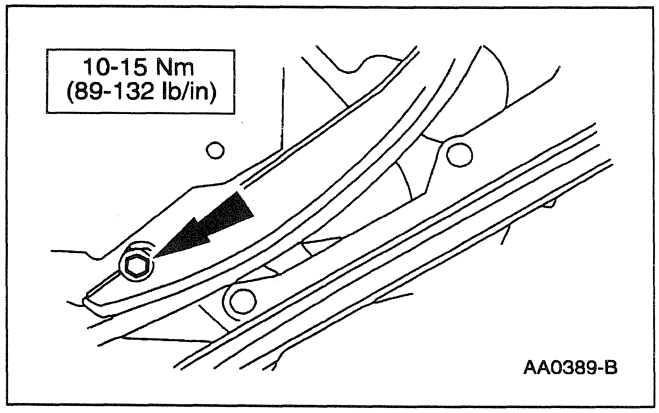

56. Install the RH and the LH timing chain tensioner arm (6L253).

ASSEMBLY (Continued)

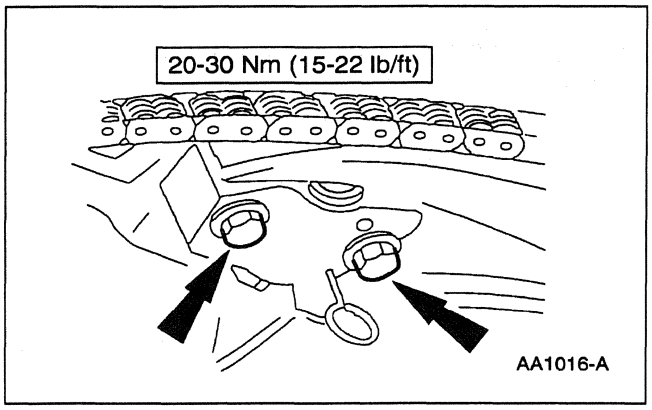

57. Install the RH and the LH timing chain tensioner (6L266).

58. Remove pins from tensioner.

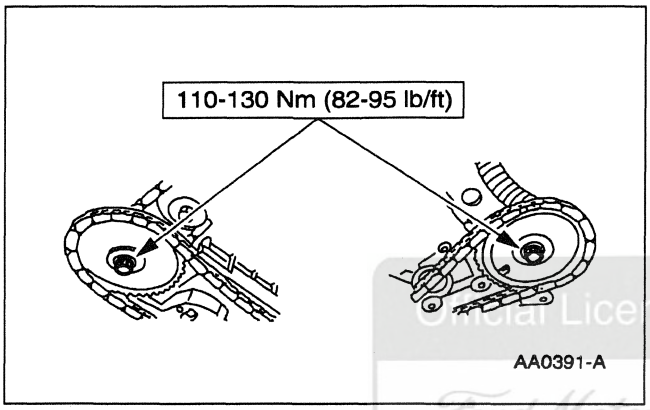

59. Tighten the camshaft sprocket bolts.

Official Licensed Product
Ford Motor Company

ASSEMBLY (Continued)

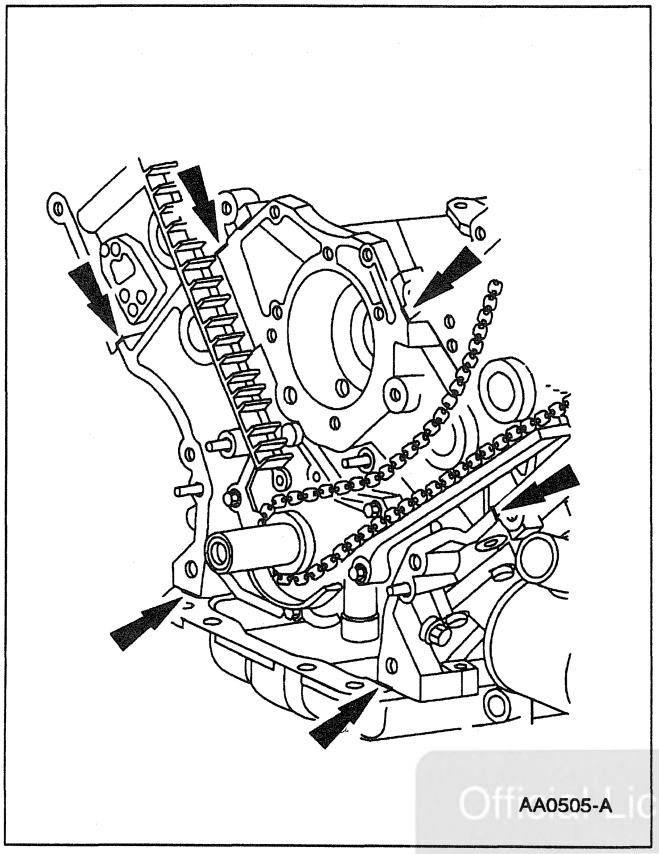
AA0505-A

60. Apply silicone along the head to block surface and to oil pan (6 places).
    - Use Silicone Gasket and Sealant F6AZ-19562-AA or equivalent meeting Ford specification WSE-M4G323-A6.

Official Licensed Product
Ford Motor Company

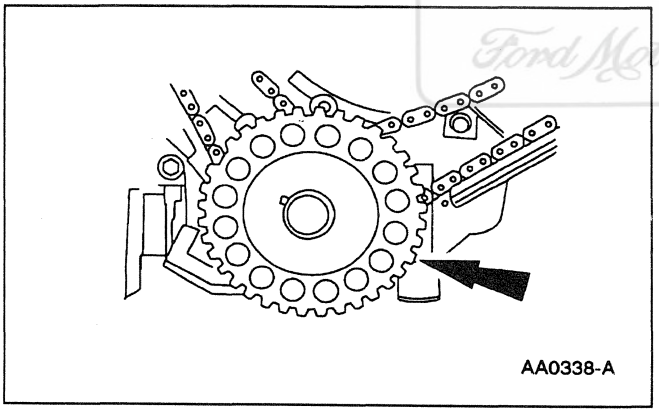
AA0338-A

61. Install the crankshaft position sensor (cap) pulse wheel with hub facing crankshaft sprockets.

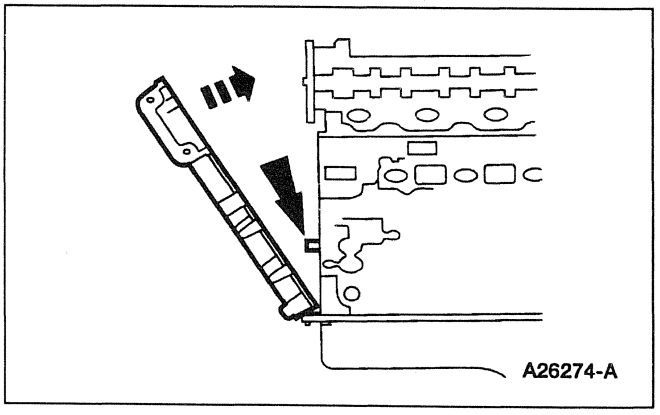
A26274-A

62. Install the engine front cover (6019) on the dowel pins on the front of the cylinder block.

ASSEMBLY (Continued)

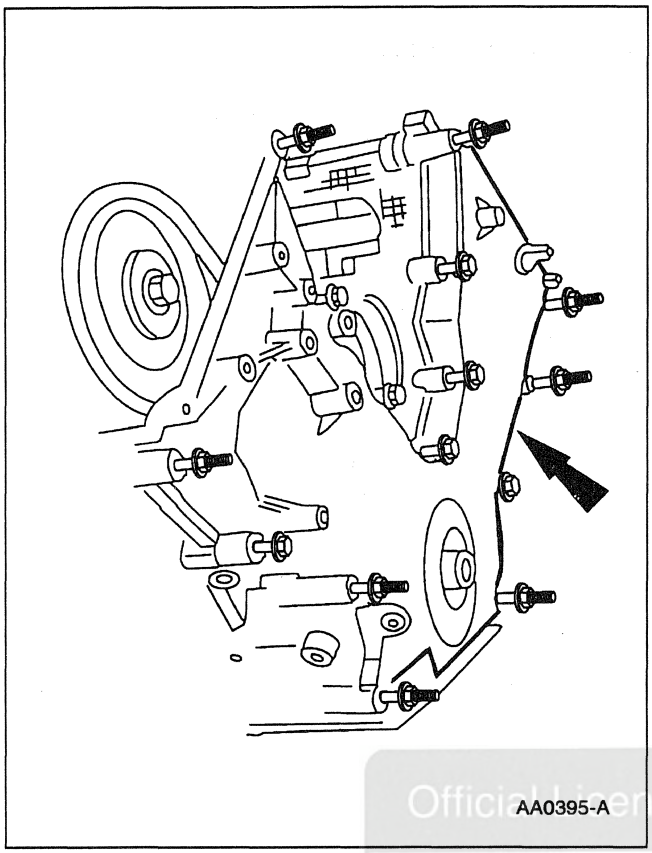

63. **NOTE:** Studs 1, 6 and 7 are shorter than studs 11-15.

    Install the engine front cover. Loosely install the bolts and studs.

Official Licensed Product
Ford Motor Company

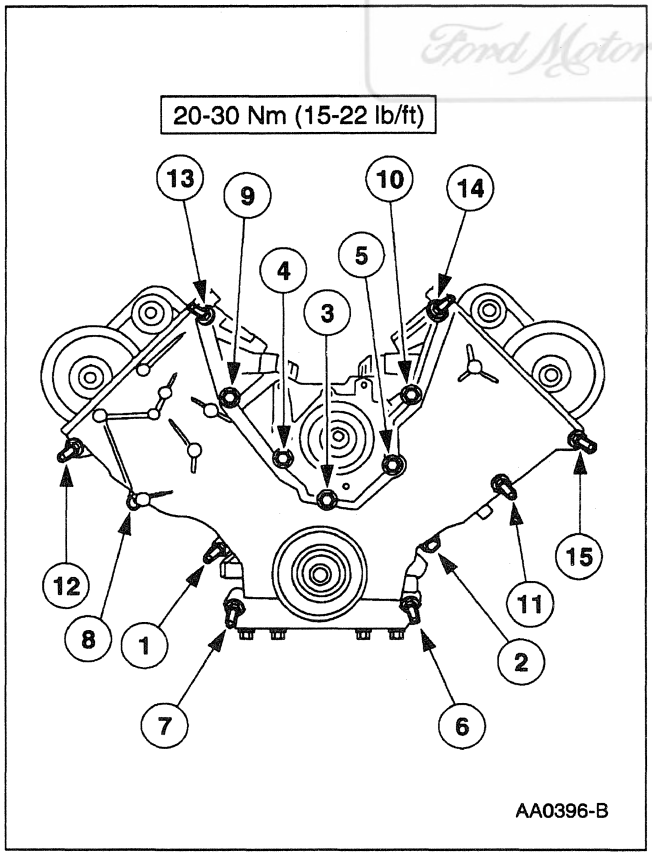

64. Tighten the bolts and the oil pan bolts in the sequence shown.

ASSEMBLY (Continued)

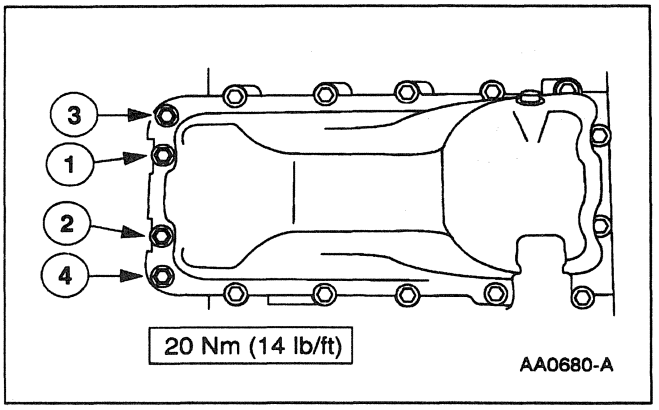

65. Install and tighten the bolts in two steps.

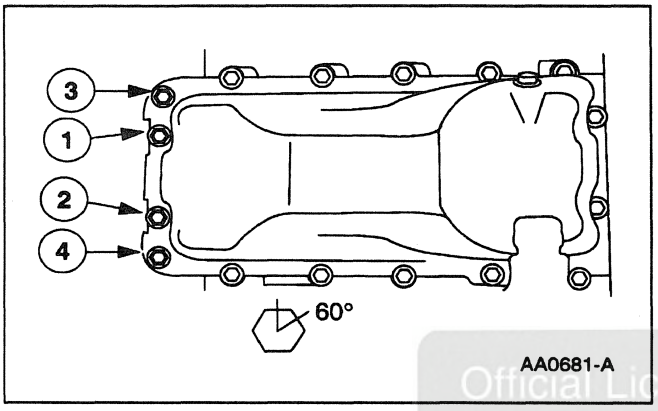

66. Tighten the bolts in the sequence shown.

Official Licensed Product

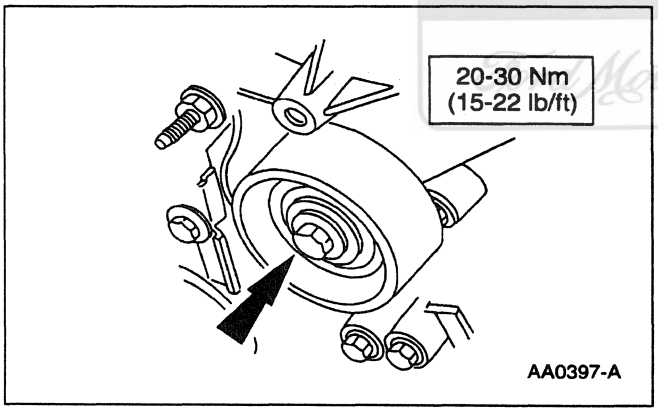

67. Position the belt idler pulley (8678) and install the bolt.

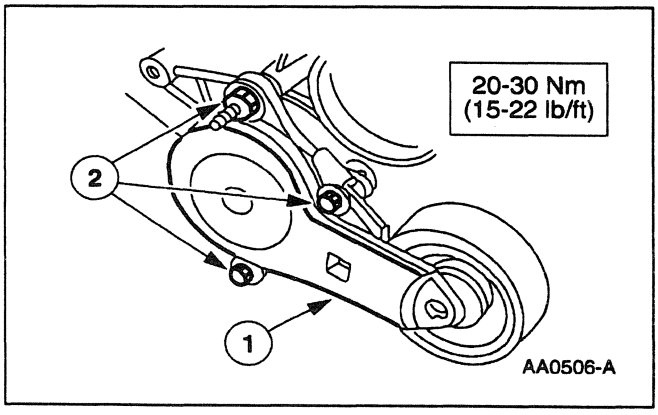

68. If removed, install the drive belt tensioner (6B209).
    1 Position the drive belt tensioner.
    2 Install and tighten the bolts.

ASSEMBLY (Continued)

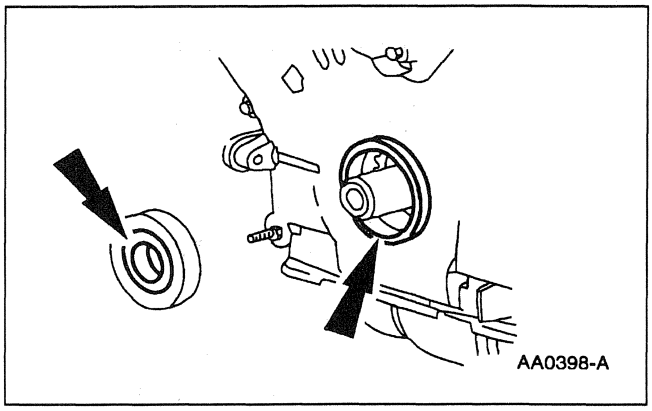

69. Lubricate the crankshaft front seal (6700) and the front oil seal inner lip.
    - Use engine oil meeting Ford specification WSS-M2C153-G.

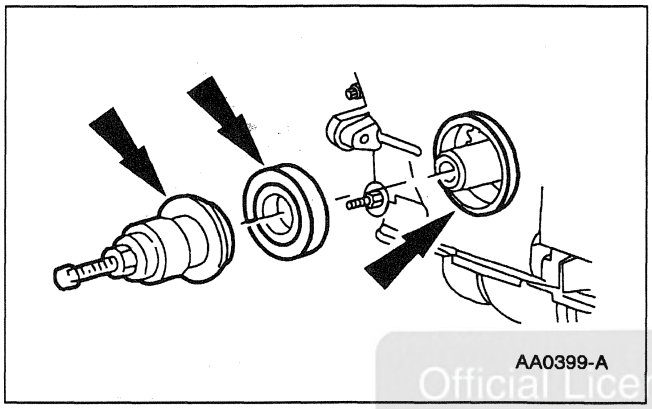

70. Use the Crankshaft Seal Replacer/Aligner to install the front oil seal into the engine front cover.

Official Licensed Product
Ford Motor Company

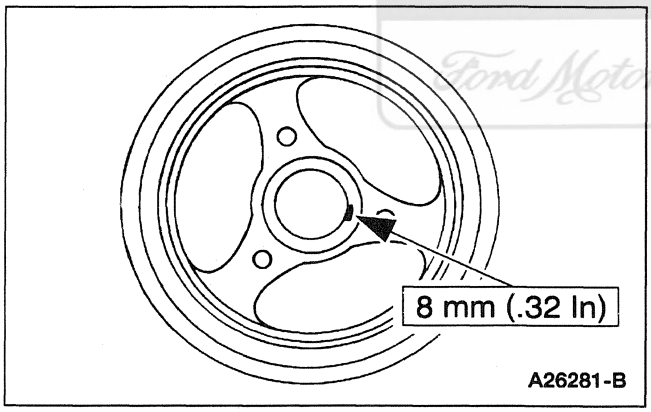

71. Apply silicone to the woodruff key slot on the crankshaft pulley (6312).
    - Use Silicone Gasket and Sealant F6AZ-19562-AA or equivalent meeting Ford specification WSE-M4G323-A6.

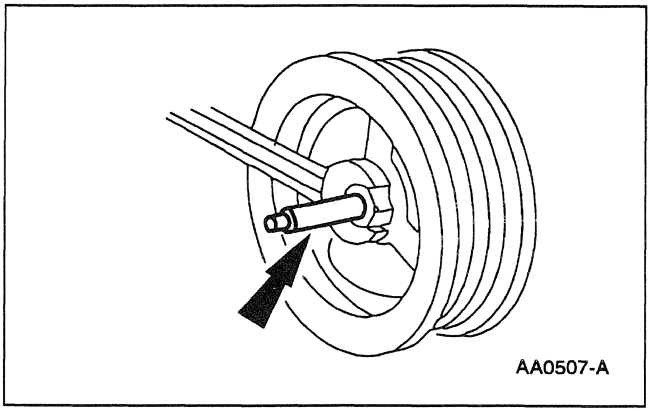

72. Use Crankshaft Damper Replacer to install the crankshaft pulley.

ASSEMBLY (Continued)

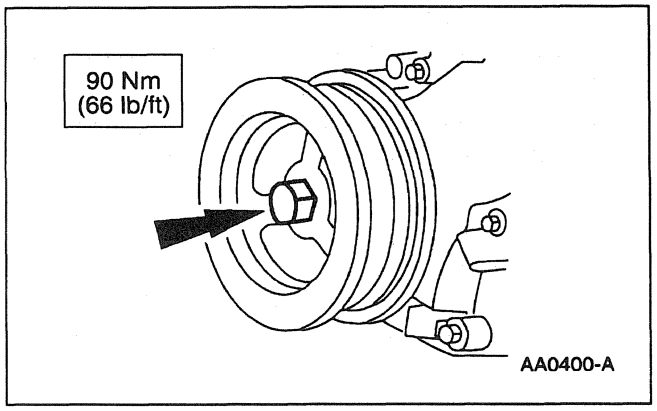

73. **NOTE:** Make sure to tighten the bolt in four steps. Tighten the bolt.

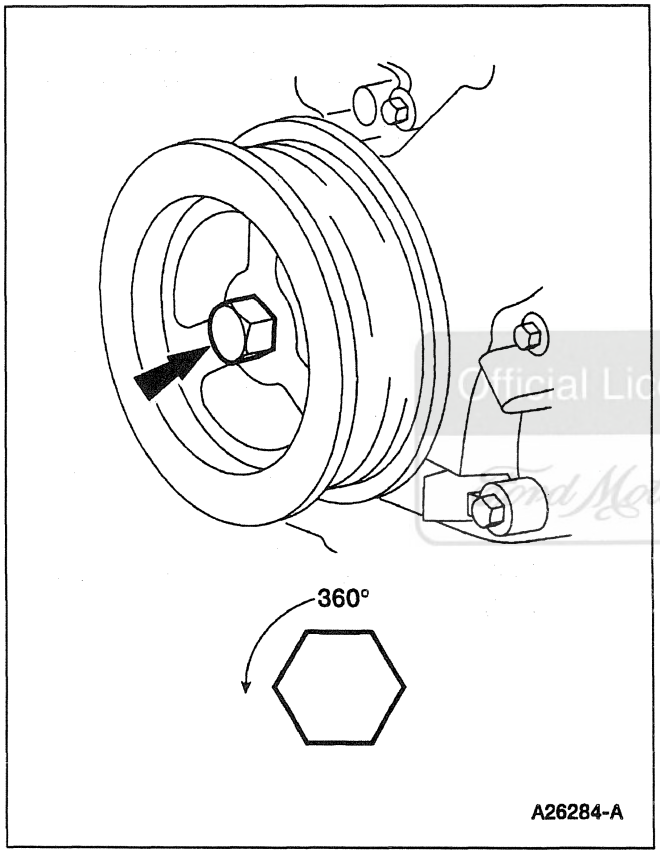

74. Loosen the bolt.

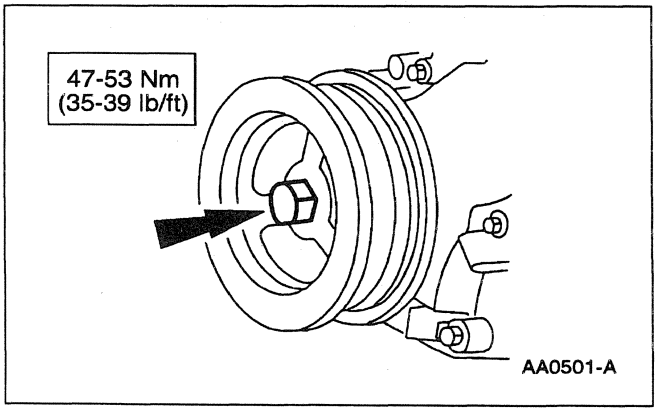

75. Tighten the bolt.

Official Licensed Product
Ford Motor Company

ASSEMBLY (Continued)

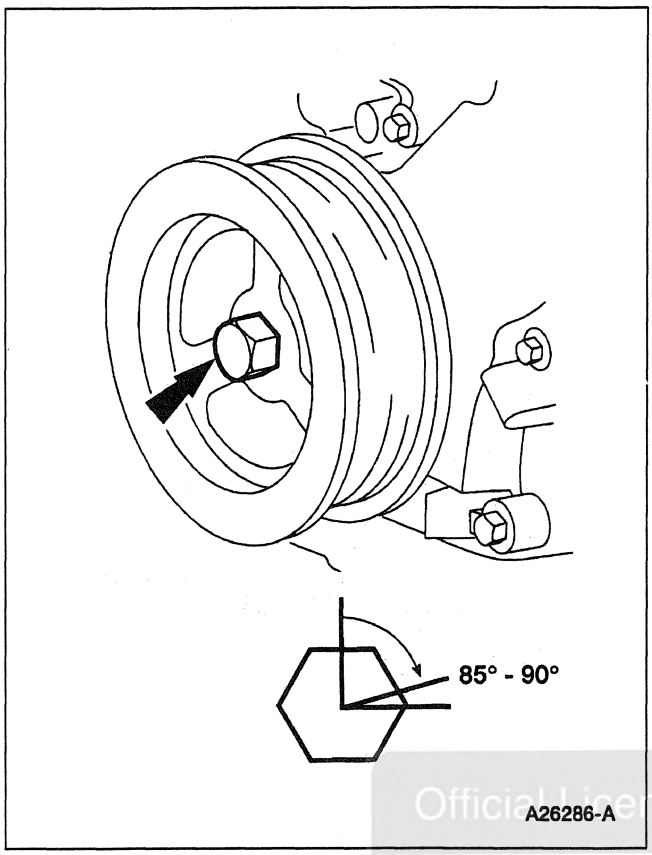

76. Tighten the bolt.

Official Licensed Product
Ford Motor Company

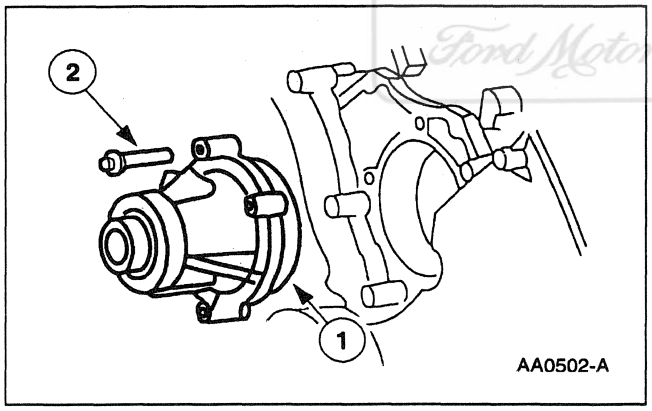

77. Install the water pump (8501).
    1. Lubricate and install the O-ring seal.
        - Use Premium Engine Coolant E2FZ-19549-AA or -B (in Oregon, F5FZ-19549-CC) or equivalent meeting Ford specification ESE-M97B44-A
    2. Position the water pump and loosely install the bolts.

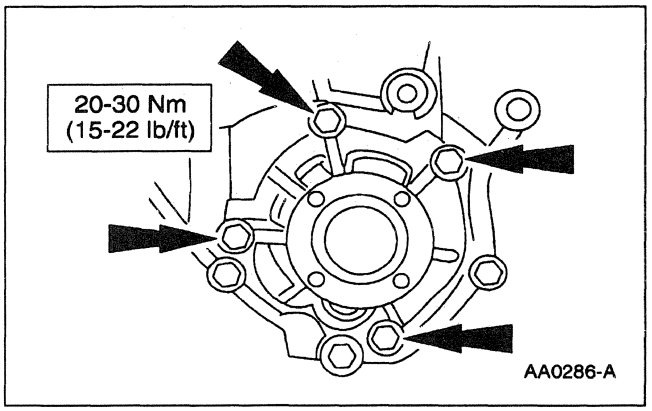

78. Tighten the bolts.

ASSEMBLY (Continued)

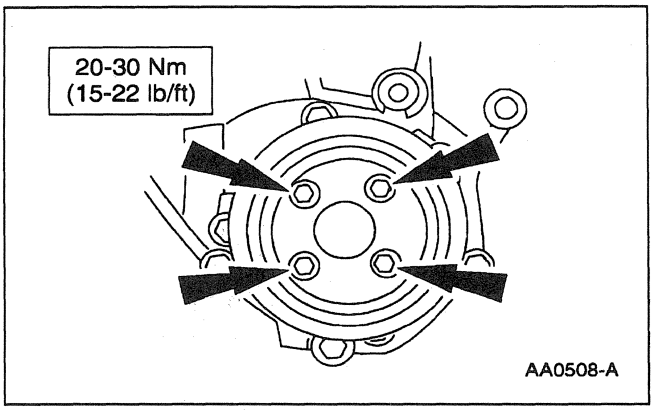

79. Install the water pump pulley (8509) and install the bolts.

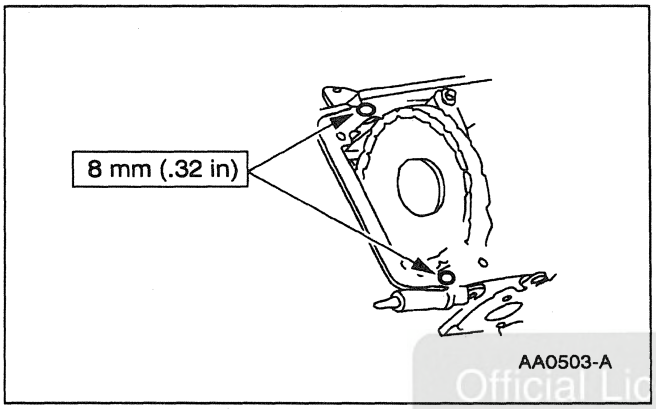

80. Apply silicone in two places where the engine front cover meets the cylinder head.
    - Use Silicone Gasket and Sealant F6AZ-19562-AA or equivalent meeting Ford specification WSE-M4G323-A6.

Official Licensed Product
Ford Motor Company

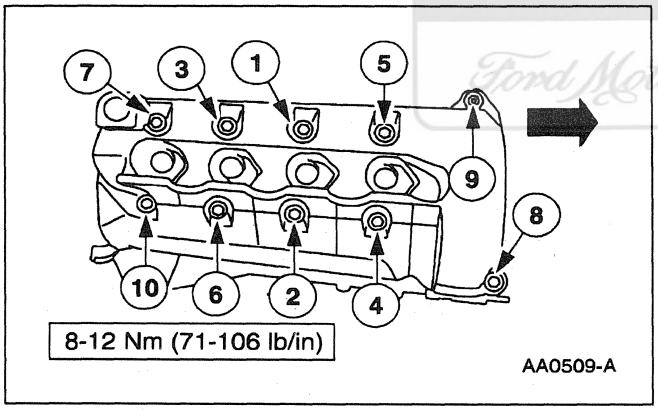

81. Install the RH valve cover (6582). Tighten the bolts in the sequence shown.
    - Make sure to check the tower gaskets for damage.
    - Install a new valve cover gasket (6584).

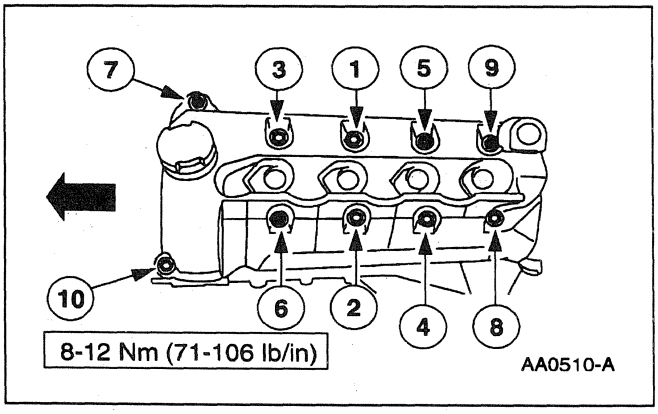

82. Install the LH valve cover. Tighten the bolts in the sequence shown.
    - Install a new valve cover.
    - Check spark plug tower (well) seals for placement.

ASSEMBLY (Continued)

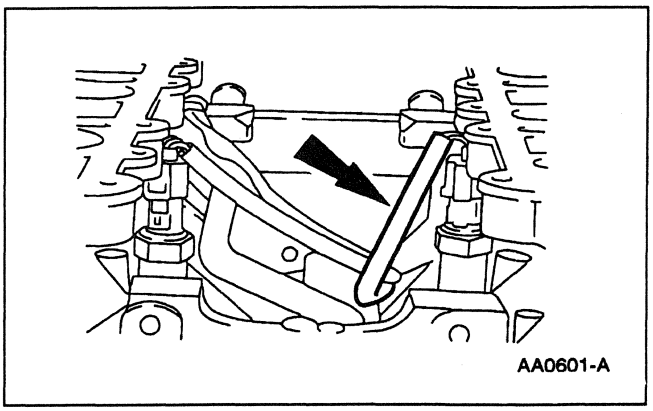
AA0601-A

83. Connect the knock sensor harness to knock sensors.

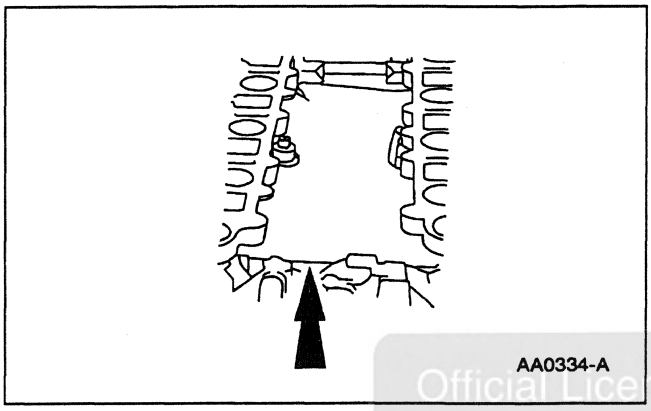
AA0334-A

84. Install the noise shield.

Official Licensed Product
Ford Motor Company

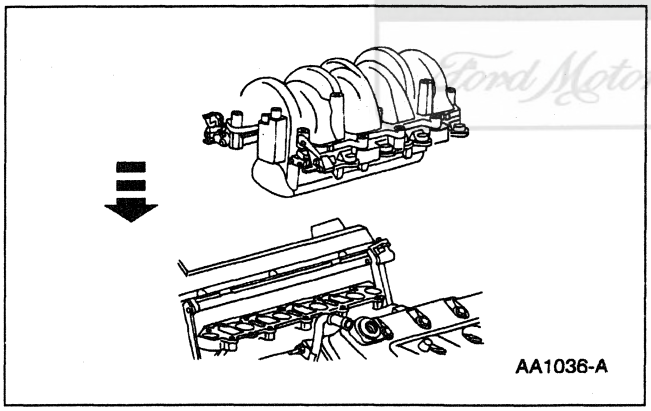
AA1036-A

85. **NOTE:** The lower intake manifold runner control gaskets are housed within grooves located in the bottom surface of the IMRC units.

    Place the IMRC units, upper gaskets and new lower gaskets under the lower intake manifold.

ASSEMBLY (Continued)

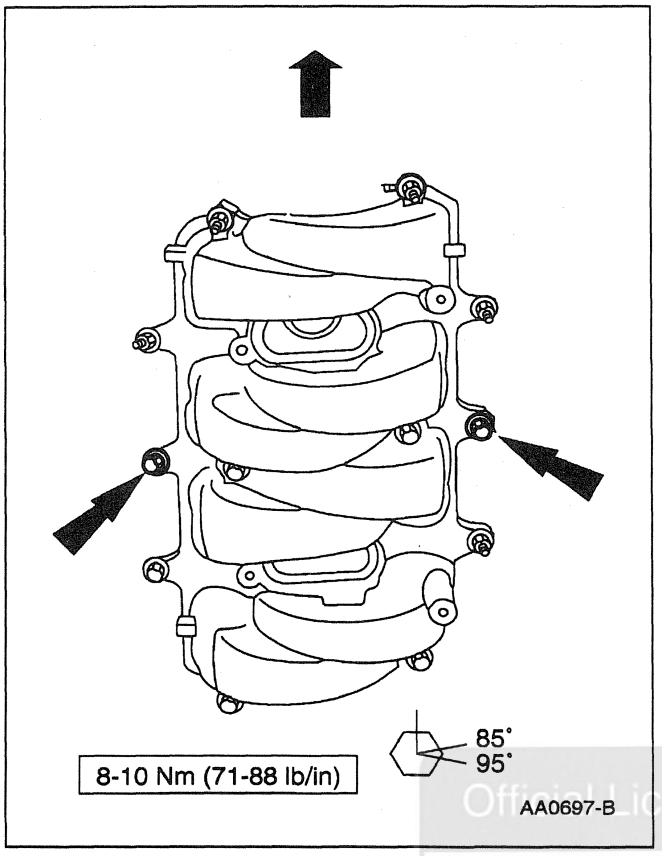

Official Licensed Product
Ford Motor Company

86. Install the lower intake manifold with IMRC units and tighten the bolts.

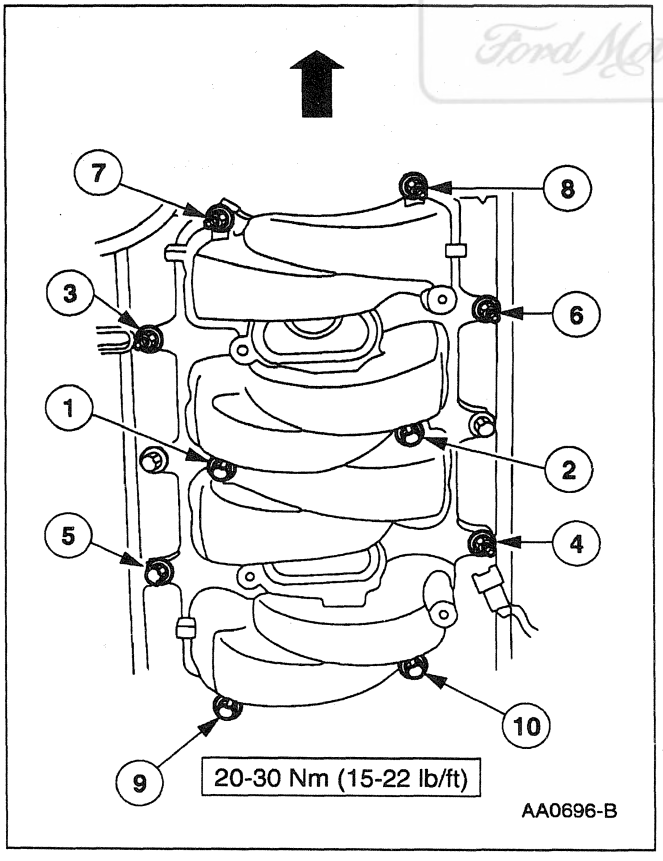

ASSEMBLY (Continued)

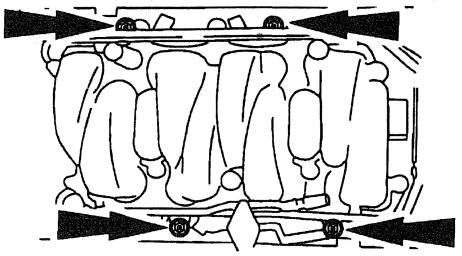

87. Install the fuel injection supply manifold (9F792) and the fuel injectors. Install the bolts.

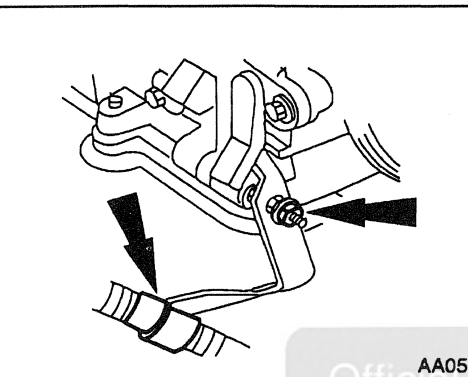

88. Attach the wiring harness to the bottom of the engine front cover.

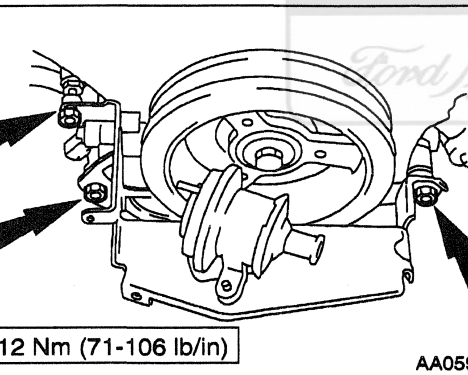

89. Install the secondary air injection diverter valve (9F491) and the bracket nuts.

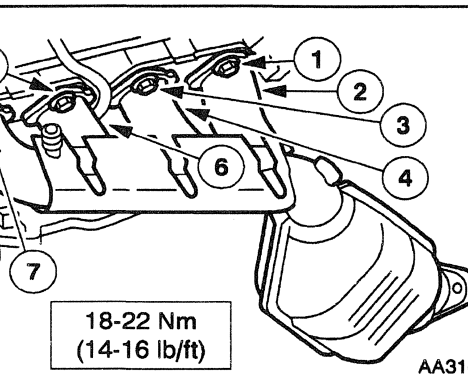

90. Install the two LH exhaust manifold gasket and the manifold assembly. Install the nuts.

Official Licensed Product
Ford Motor Company

ASSEMBLY (Continued)

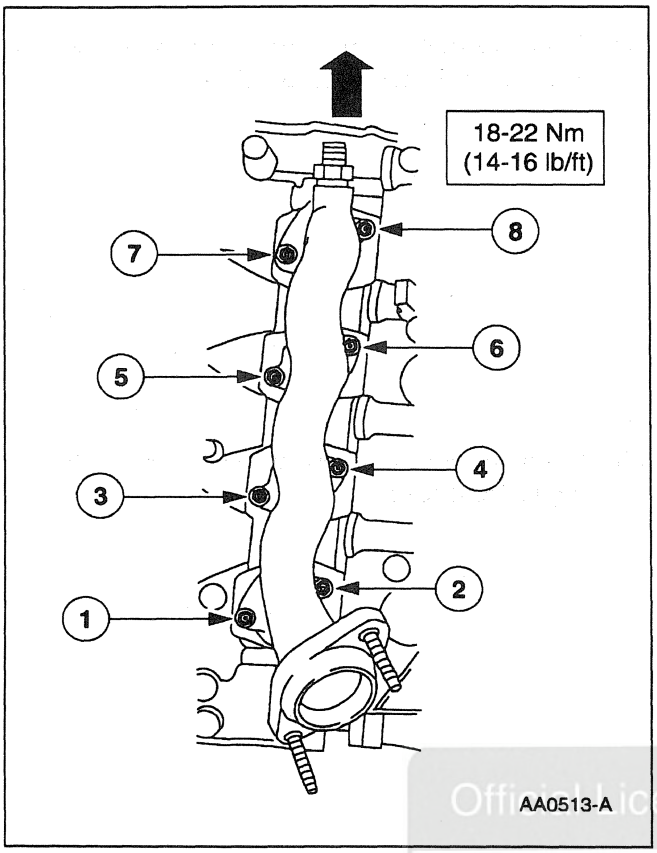

91. Install the RH exhaust manifold gasket (9448) and the exhaust manifold (9430). Install the nuts.

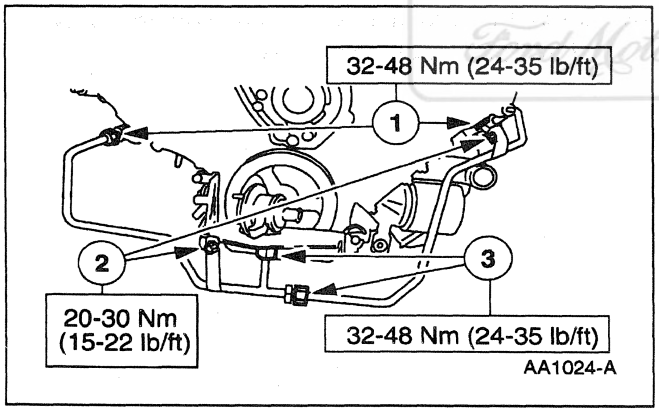

92. Connect the secondary air injection manifold tube (9B449) and the secondary air injection manifold tube.
    1 Connect the tubes to the exhaust manifold.
    2 Attach the tube to the bracket.
    3 Connect the tubes together and to the valve.

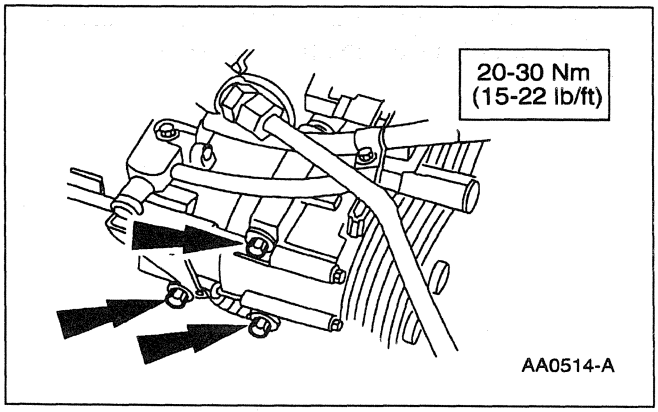

93. Install the A/C compressor (19703) and install the bolts.

Official Licensed Product
Ford Motor Company

ASSEMBLY (Continued)

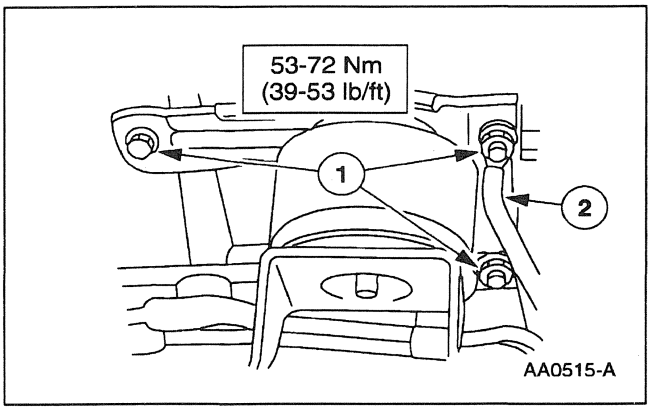

94. Install the RH front engine support insulator (6038).
    1 Install the RH front engine support insulator. Install the bolts.
    2 Install the grounding strap.

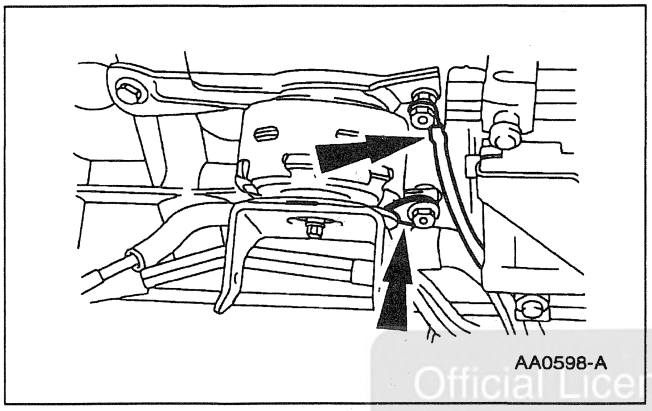

95. Attach the transmission line bracket and the starter ground to the engine insulator.

Official Licensed Product
Ford Motor Company

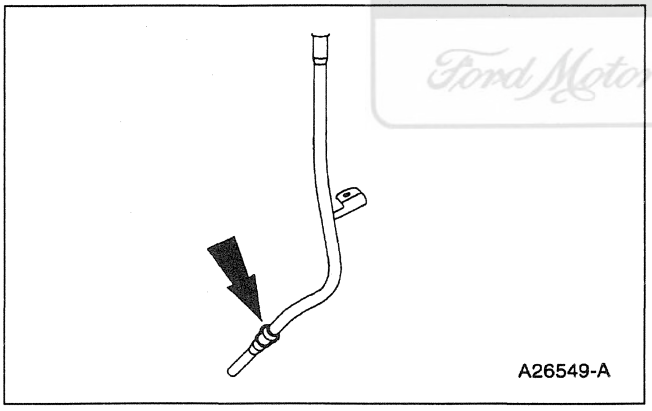

96. Lubricate the O-ring seal on the oil level indicator tube and position in the hole on the cylinder block.
    - Use clean engine oil meeting Ford specification WSS-M2C153-G.

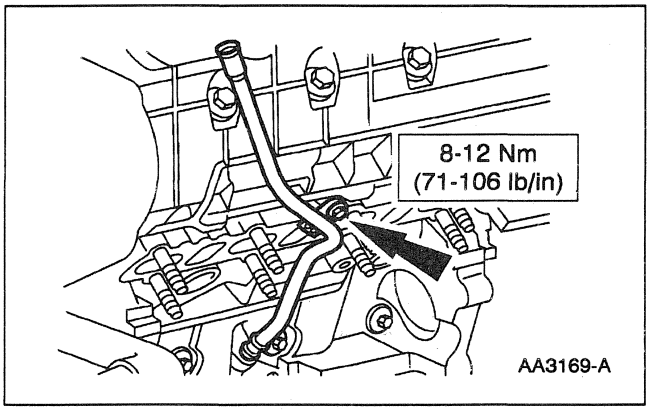

97. Install the oil level indicator tube (6754) and tighten bolt.

ASSEMBLY (Continued)

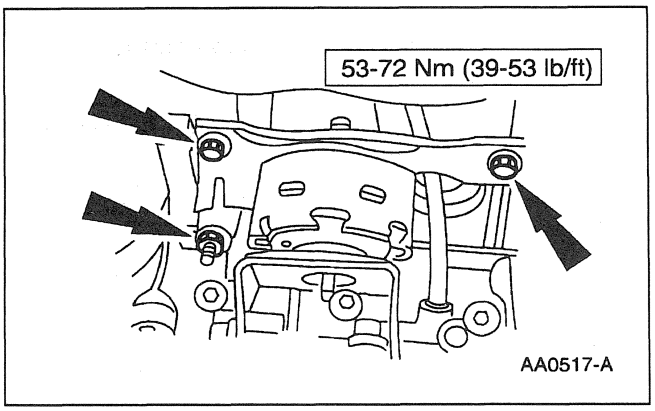

98. Install the LH front engine support insulator and install the bolts.

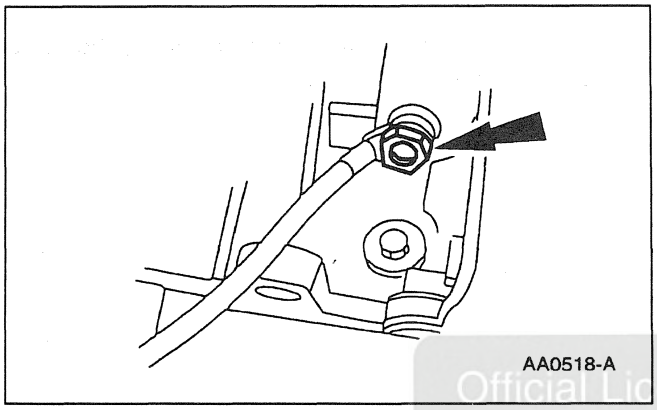

99. Install the grounding strap to the bolt.

Official Licensed Product
Ford Motor Company

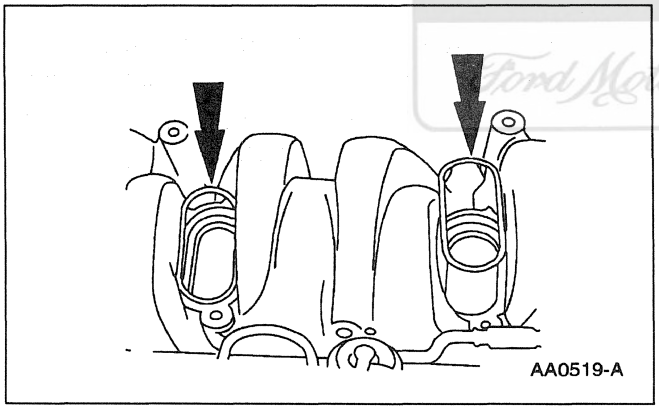

100. Install the intake manifold upper to lower gaskets.

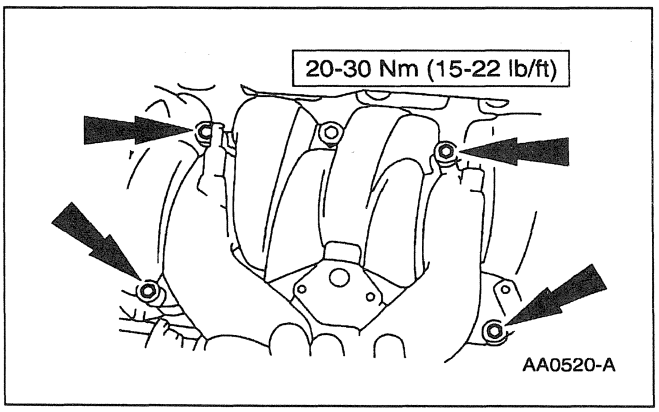

101. Install the upper intake manifold and install the bolts.

ASSEMBLY (Continued)

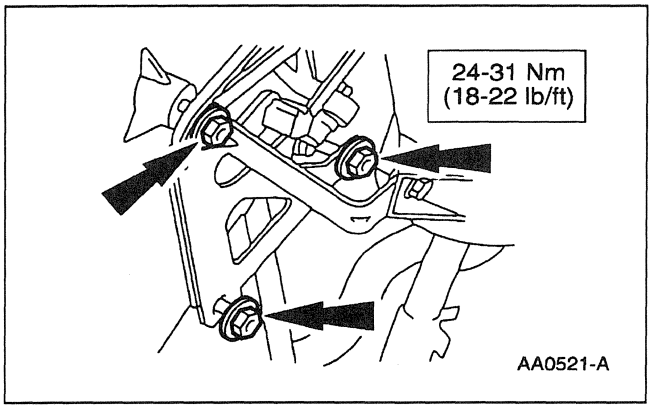

102. Install the bolt and nuts to the power steering reservoir bracket.

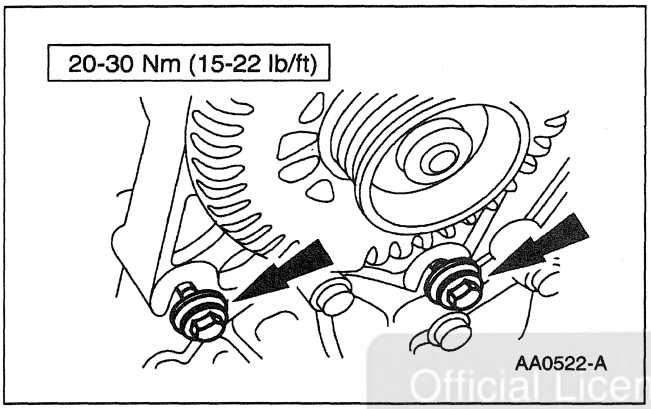

103. Install the generator (GEN)(10300) and the bolts.

Official Licensed Product
Ford Motor Company

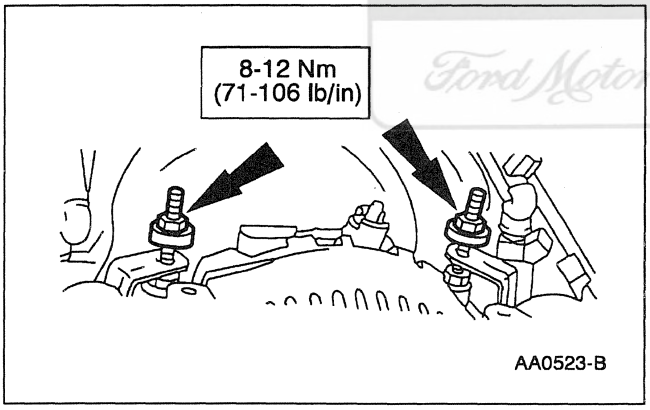

104. Install the water bypass tube (8548) and install the nuts.

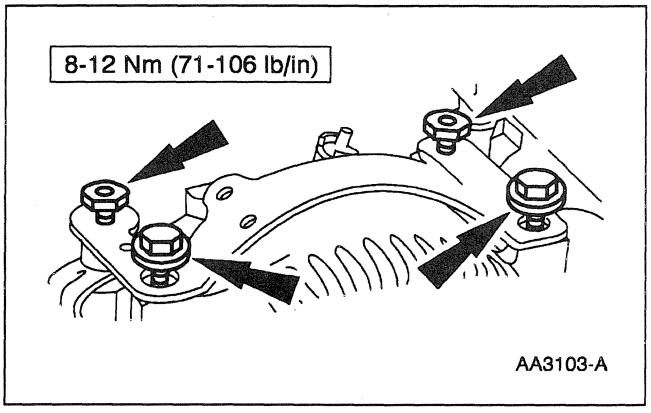

105. Install the generator mounting bracket (10153) and install the bolts and nuts.

ASSEMBLY (Continued)

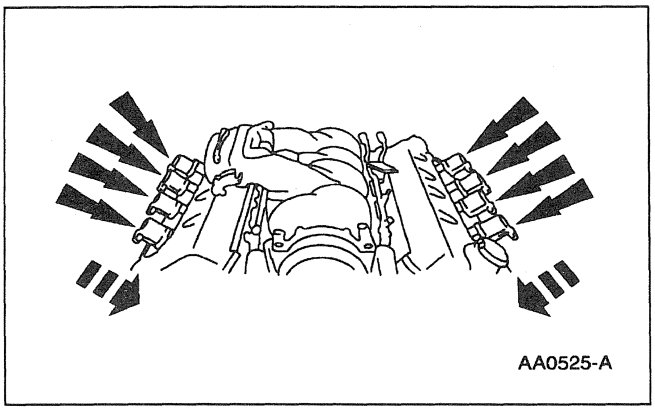

106. Install the ignition coil assy.

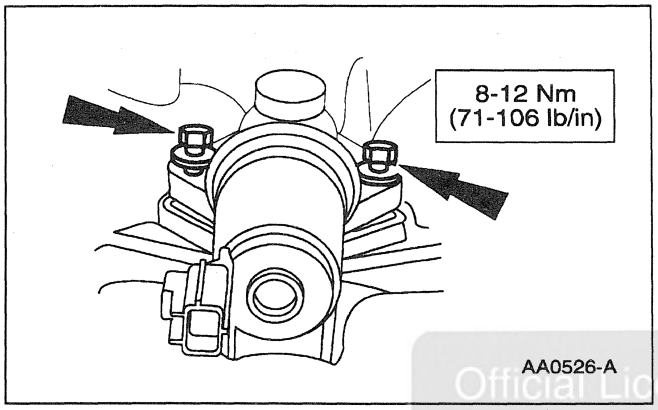

107. If removed, install the idle air control valve (IAC valve)(9F715) and install the bolts.

Official Licensed Product
Ford Motor Company

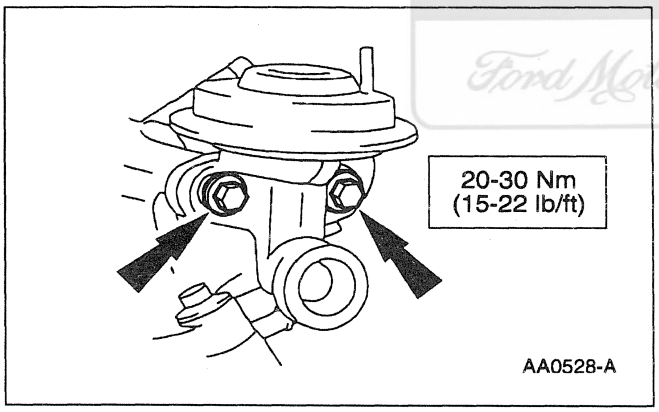

108. If removed, install the EGR valve (EGR valve)(9D475) and install the bolts.

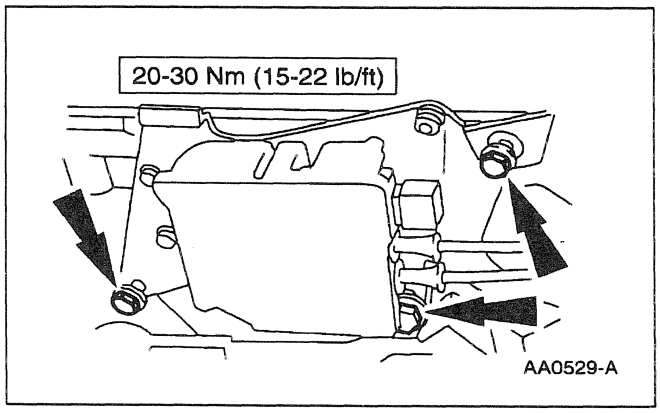

109. Install the Delta PFE and Bracket Assy intake manifold runner control actuator and install the bolts.

ASSEMBLY (Continued)

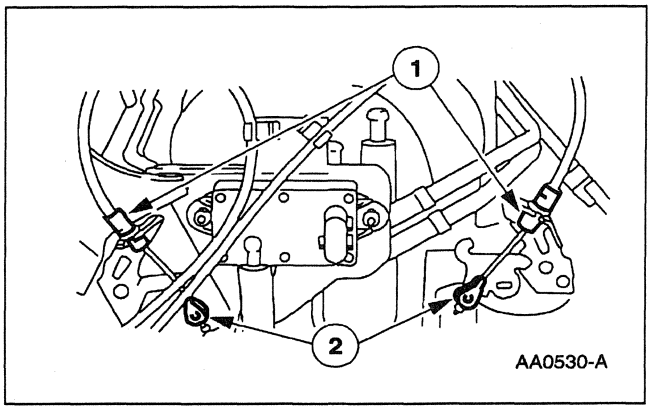

110. Install the IMRC actuator cable.
    1 Connect the IMRC actuator cable to the bracket.
    2 Attach the nail head clip to the lever.

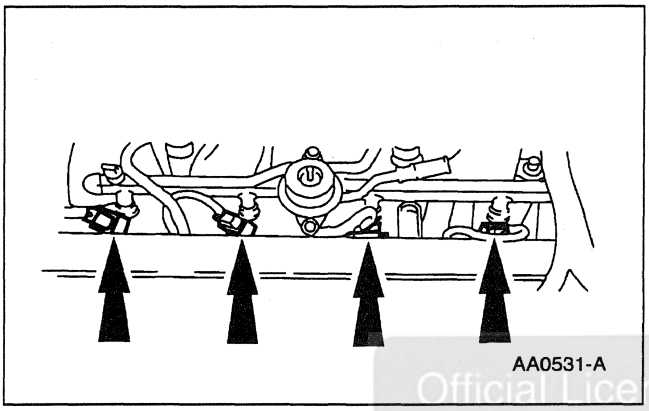

111. Connect the wiring harness connectors to the eight fuel injectors.

Official Licensed Product
Ford Motor Company

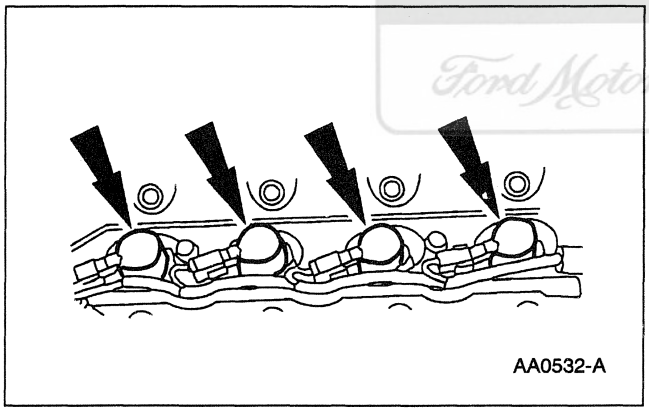

112. Connect the wiring harness connectors to the eight ignition coils.

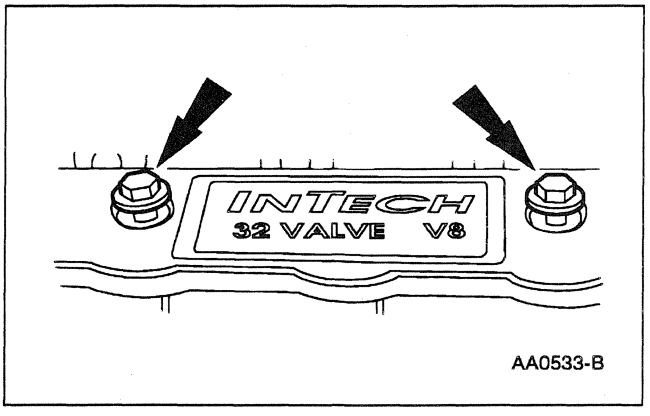

113. Install the RH and LH ignition coil cover. Install the bolts.

ASSEMBLY (Continued)

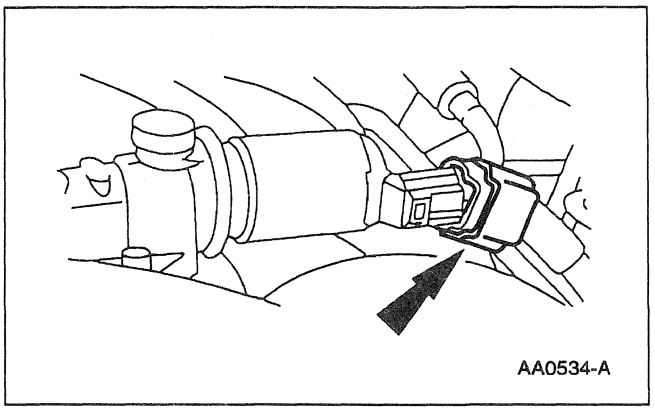

114. Connect the idle air control valve connector.

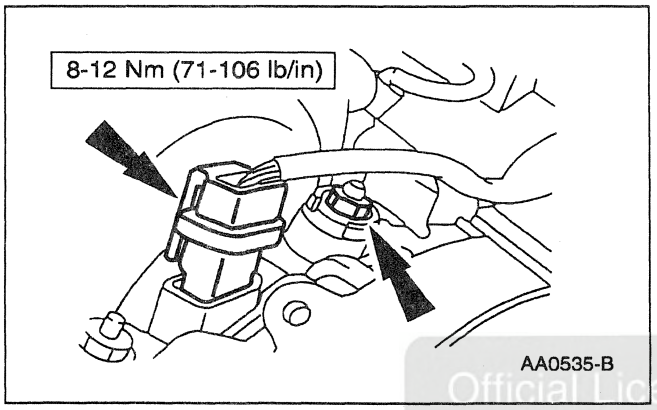

115. Connect the generator connector and attach the grounding wire to the generator bracket.

Official Licensed Product
Ford Motor Company

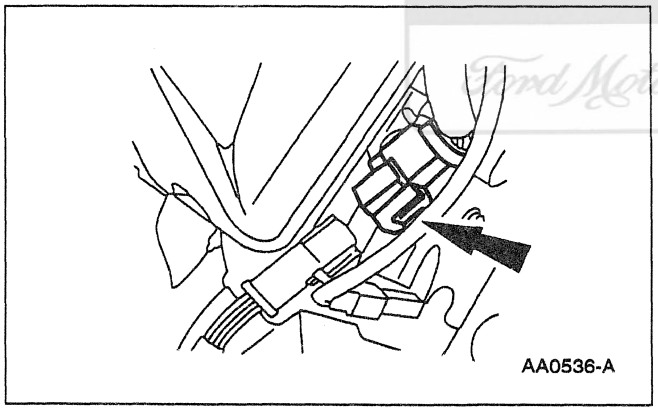

116. Connect the LH oxygen sensor connector.

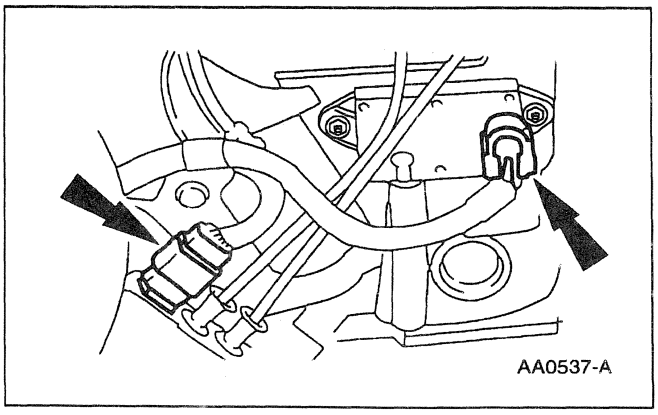

117. Connect the EGR pressure transducer and the IMRC actuator connectors.

ASSEMBLY (Continued)

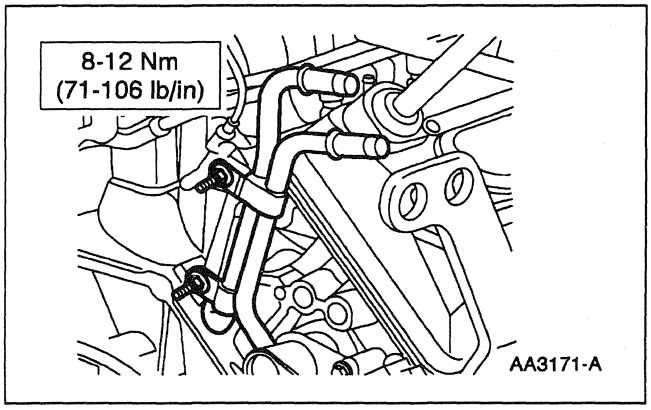

118. Install the heater water tube and install the bolts and nut.

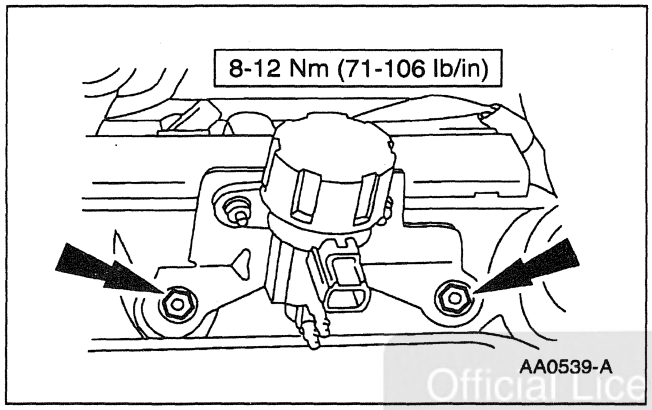

119. Install the EGR vacuum regulator control and bracket assy and install the nuts to the camshaft cover.

Official Licensed Product
Ford Motor Company

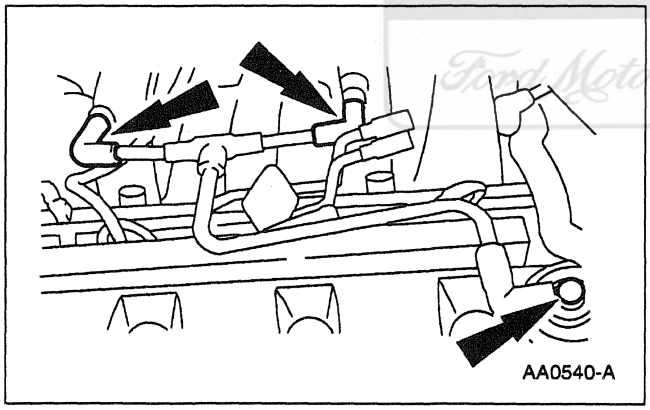

120. Install the crankcase ventilation hose (6853) .

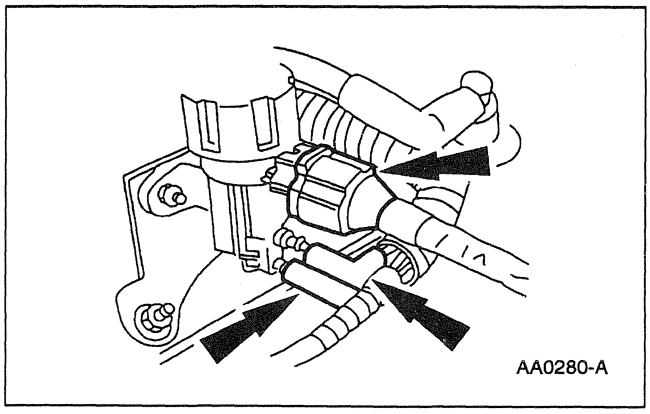

121. Connect the EGR vacuum regulator control connector and vacuum hoses.

ASSEMBLY (Continued)

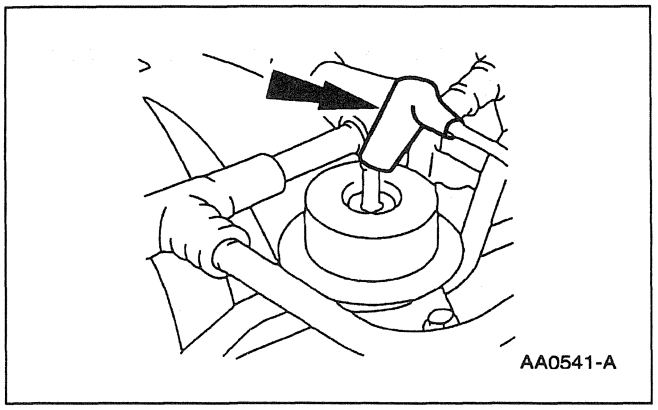

122. Connect the fuel pressure regulator vacuum hose.

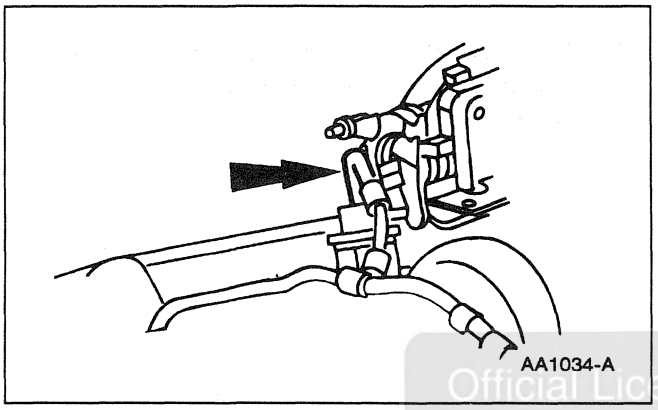

123. Connect the fuel pulse damper connector.

Official Licensed Product
Ford Motor Company

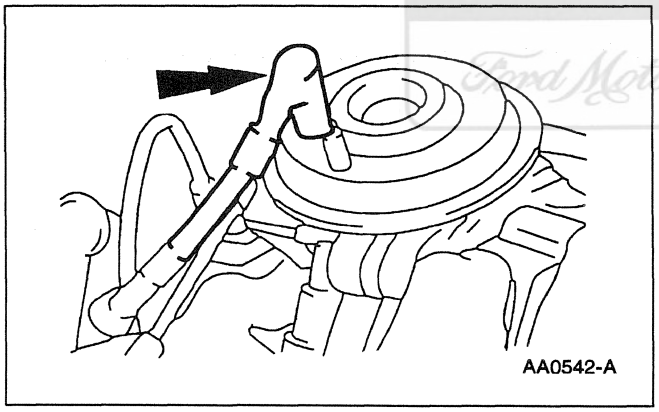

124. Connect the EGR valve vacuum hose.

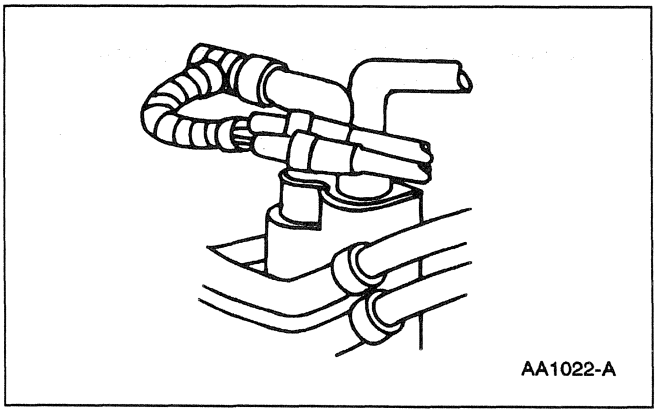

125. Connect the chassis vacuum hoses to the lower intake manifold.

ASSEMBLY (Continued)

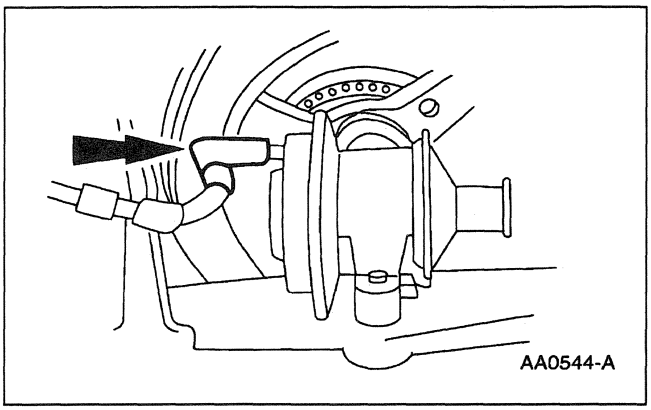

126. Install vacuum hose to the diverter valve.

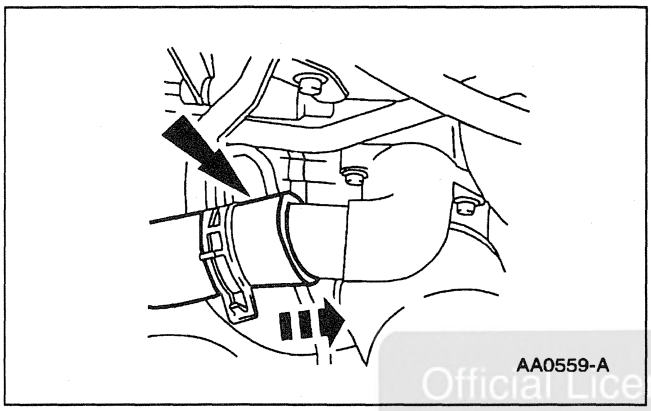

127. Install the thermostat housing to oil filter adaptor hose.

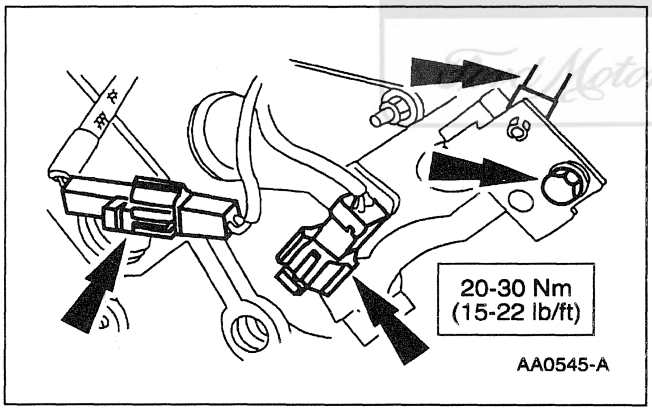

128. Install the RH radio ignition interference capacitor (18801) and connect the connectors.

129. Install the drive belt (8620) .

130. Fill the engine with clean engine oil meeting Ford specification WSS-M2C153-G.

Official Licensed Product
Ford Motor Company

DISASSEMBLY AND ASSEMBLY OF SUBASSEMBLIES

Cylinder Head

Special Tool(s)

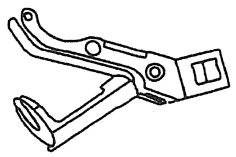 ST1693-A	Valve Spring Compressor (Exhaust Side) 303-567 (T97P-6565-AH)
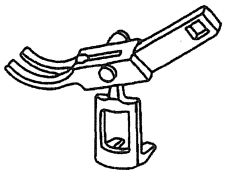 ST1718-A	Valve Spring Compressor (Intake Side) 303-452 (T93P-6565-A)

(Continued)

Special Tool(s)

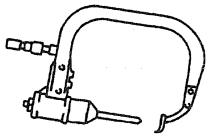 ST1716-A	Valve Spring Compressor, Air Operated 134-R0207 or equivalent
ST1332-A	Valve Stem Seal Replacer 303-383 (T91P-6571-A)

Disassembly

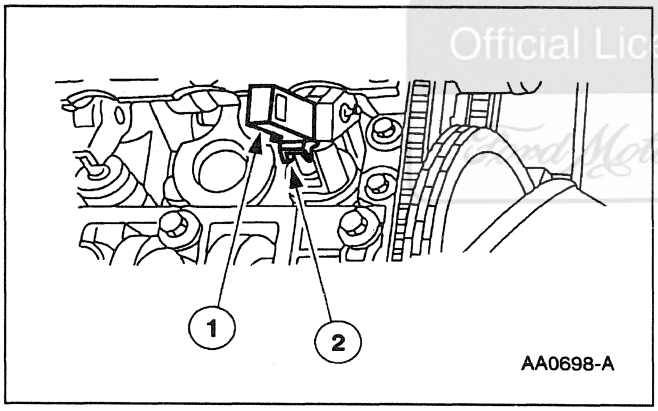

1. **CAUTION: Do not place the cylinder head flat on the bench. The valves will bend.**

   CAUTION: Before disassembly begins, mark the valve position on the face of each valve being removed. The valves must be re-installed into the same positions.

   Remove the roller followers on base circle.

   1 Install the Valve Spring Compressor on the valve spring (6513).

   2 Compress the tool and remove the roller follower.

2. Repeat Step 1 for the remaining roller followers.

3. Remove the hydraulic lash adjusters.

Official Licensed Product Ford Motor Company

DISASSEMBLY AND ASSEMBLY OF SUBASSEMBLIES (Continued)

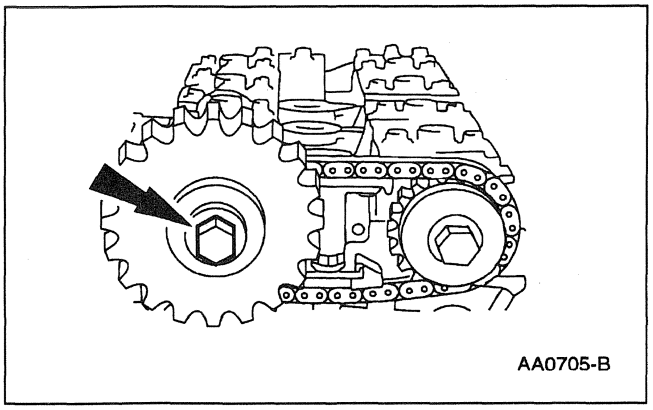
AA0705-B

4. Remove the bolt and remove the camshaft sprocket (6256) .

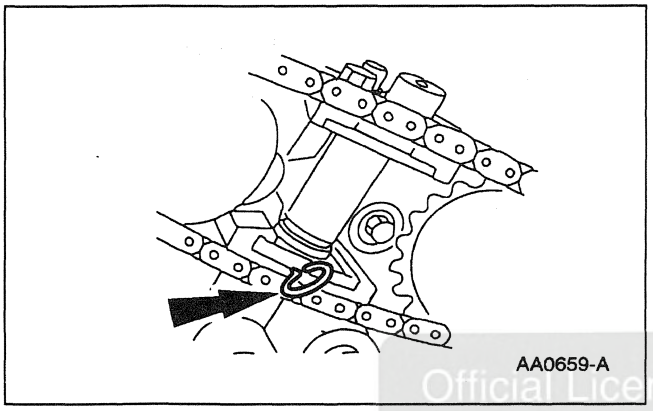
AA0659-A

5. Compress the tensioner and install a lock pin.

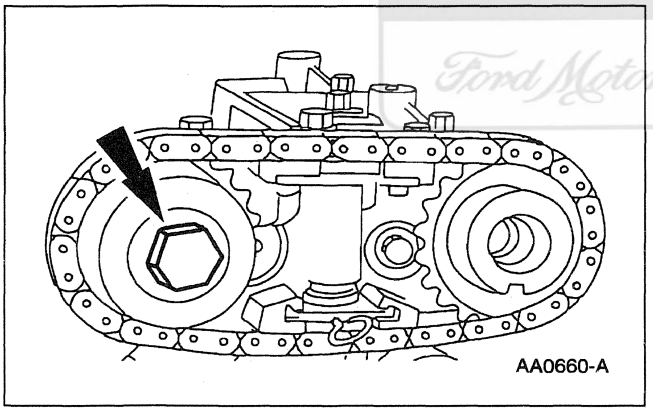
AA0660-A

6. Remove the bolt and washer.

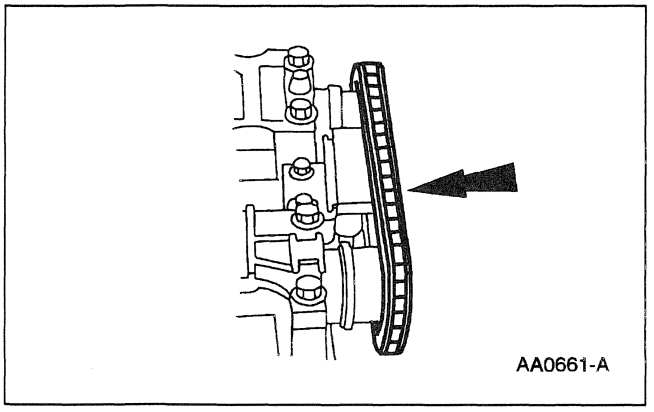
AA0661-A

7. Remove the timing chain and the camshaft sprocket .

Official Licensed Product
Ford Motor Company

DISASSEMBLY AND ASSEMBLY OF SUBASSEMBLIES (Continued)

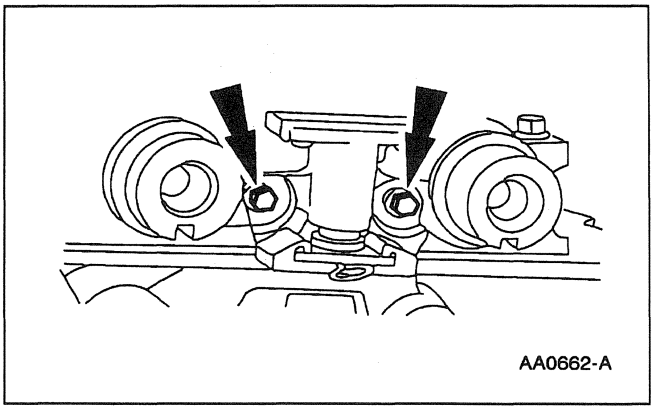

8. Remove the bolts.
   - LH is shown, RH is similar.

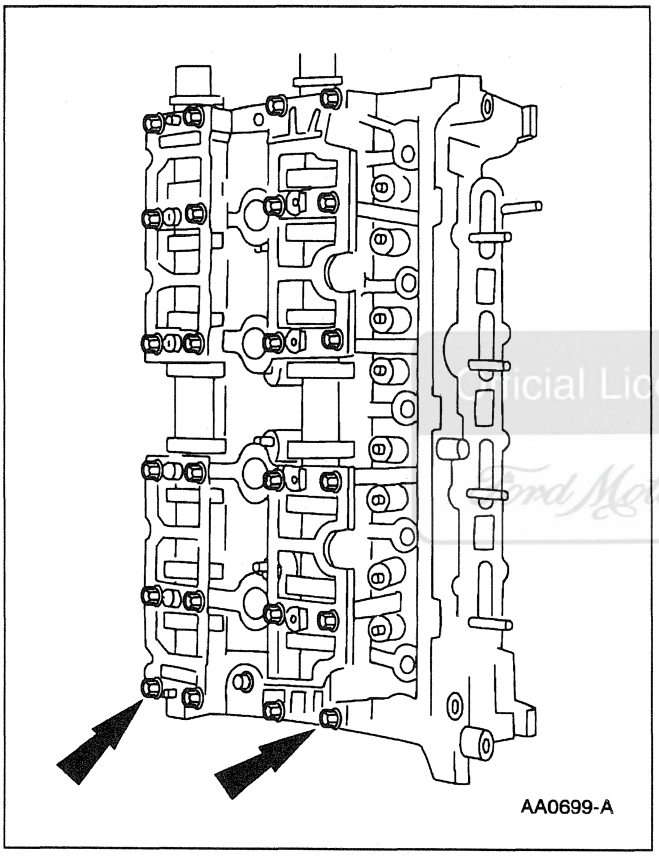

9. Remove the bolts and remove the camshaft cap assemblies.

Official Licensed Product
Ford Motor Company

DISASSEMBLY AND ASSEMBLY OF SUBASSEMBLIES (Continued)

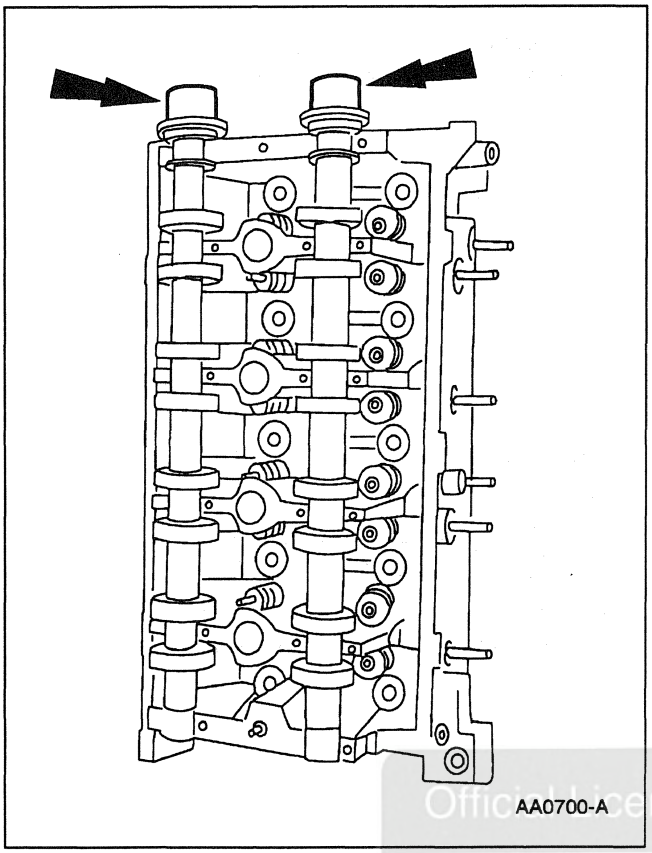
AA0700-A

10. Remove the camshafts (6250) .

Official Licensed Product
Ford Motor Company

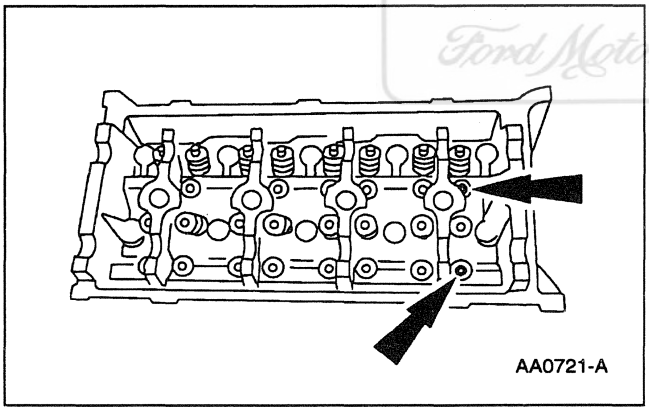
AA0721-A

11. Remove the camshafts .

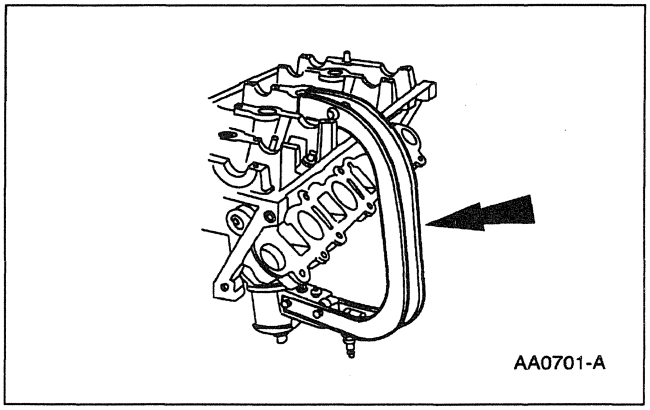
AA0701-A

12. **CAUTION: Make sure the tool is seated properly on the valve spring. Apply a small amount of air at a time. This will prevent the tool from shifting and causing damage to the cylinder head.**

    Install the air-operated spring compressor on the cylinder head.

DISASSEMBLY AND ASSEMBLY OF SUBASSEMBLIES (Continued)

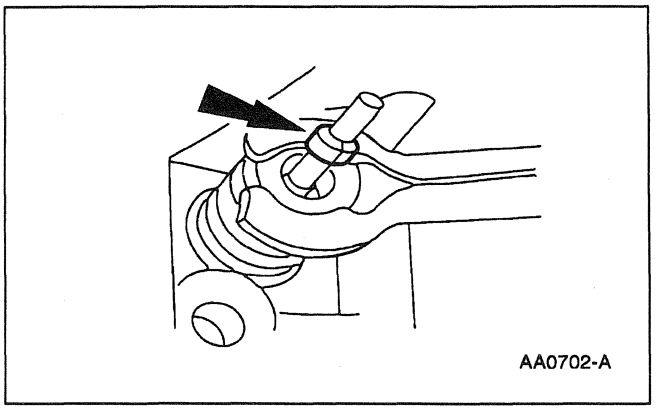
AA0702-A

13. Compress the Valve Spring Compressor and remove the key from the valves.

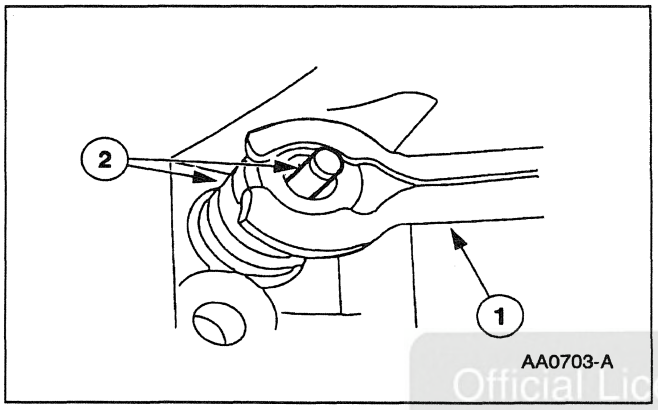

AA0703-A

14. Remove the intake valves (6507) and the valve springs .
    1 Release the pressure and remove the Valve Spring Compressor.
    2 Remove the intake valves and the valve springs from the cylinder head.

Official Licensed Product
Ford Motor Company

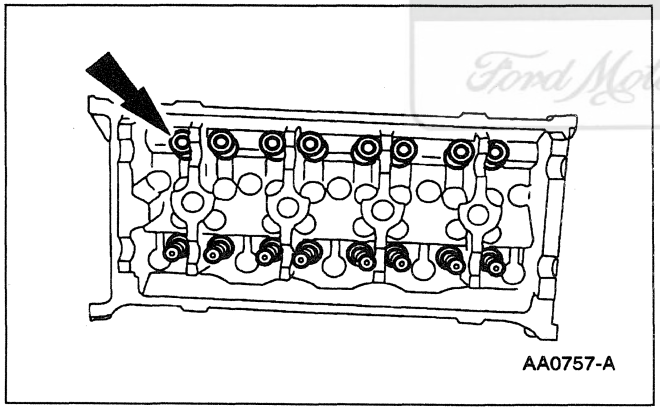
AA0757-A

15. Remove the 16 valve stem seals (6571) .

DISASSEMBLY AND ASSEMBLY OF SUBASSEMBLIES (Continued)

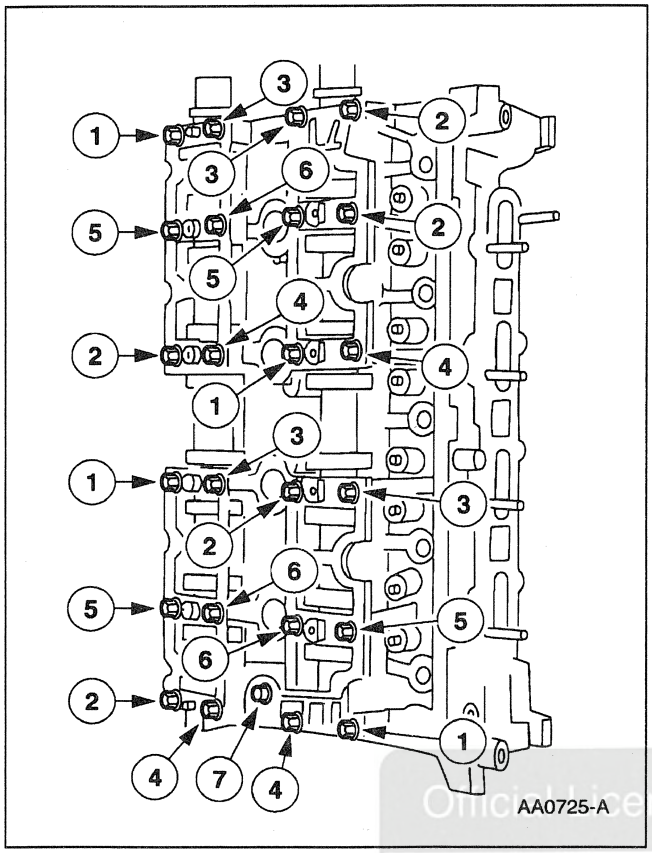

Official Licensed Product
Ford Motor Company

Assembly

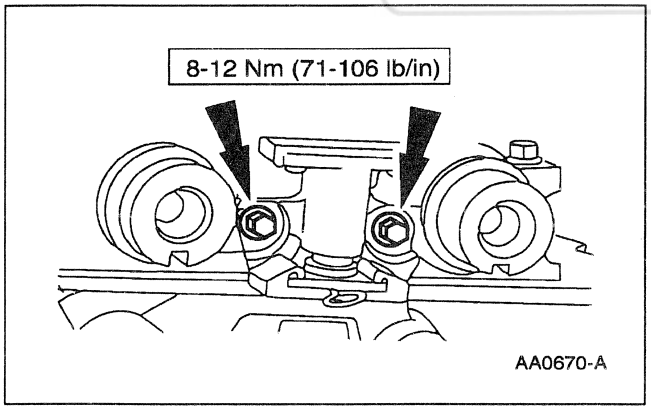

1. Follow the disassembly procedure in reverse order.
   - LH is shown, RH is similar.

DISASSEMBLY AND ASSEMBLY OF SUBASSEMBLIES (Continued)

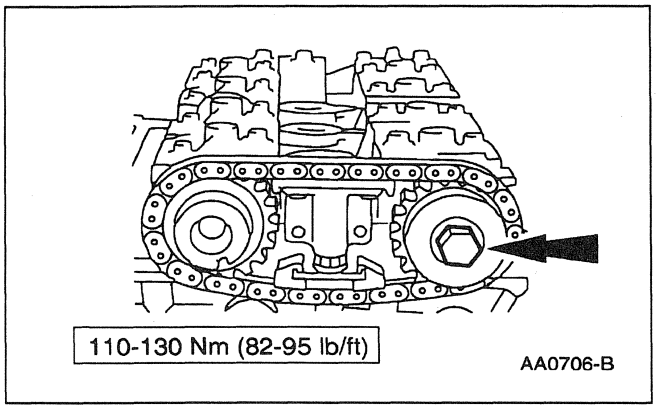

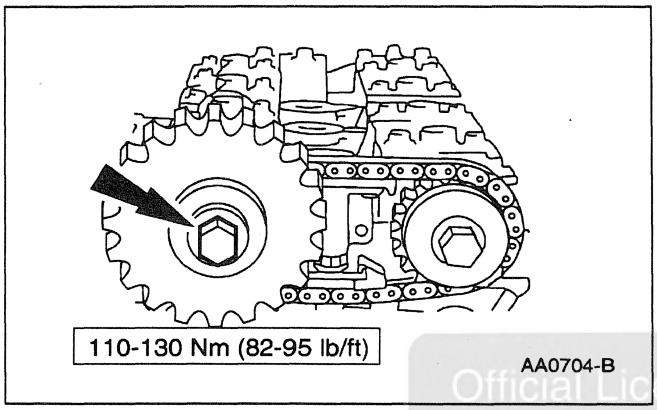

Official Licensed Product
Ford Motor Company

Piston Pin Connecting Rod

Special Tool(s)

ST1336-A	Piston Pin Tool 303-D034 (D81L-6135-A) or equivalent

Disassembly

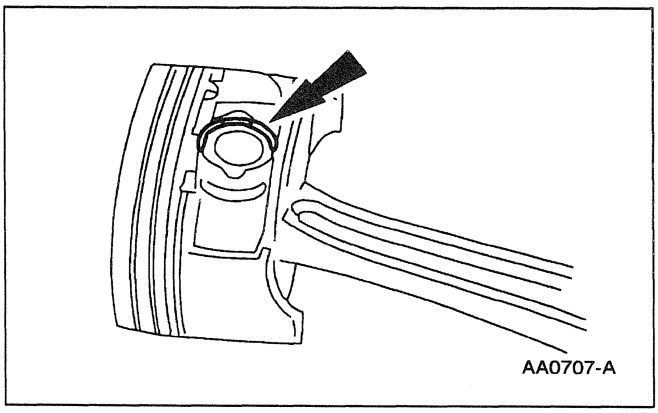

1. Remove the two retainers from the piston pin bore.

DISASSEMBLY AND ASSEMBLY OF SUBASSEMBLIES (Continued)

2. Gradually heat the piston, pin and ring (6102) to approximately 100°C (212°F).

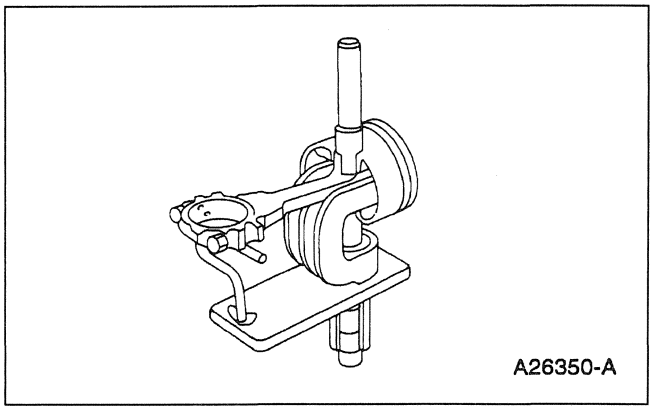

3. Use the Piston Pin Tool to press the piston pin (6135) out from the connecting rod and piston assembly.

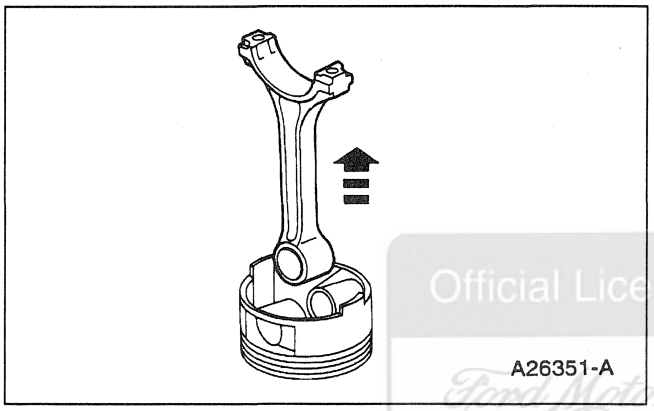

4. Remove the connecting rod (6200) from the piston, pin and ring.

Official Licensed Product
Ford Motor Company

5. Clean and inspect the connecting rod and piston, pin and ring; refer to General Procedures in this section.

Assembly

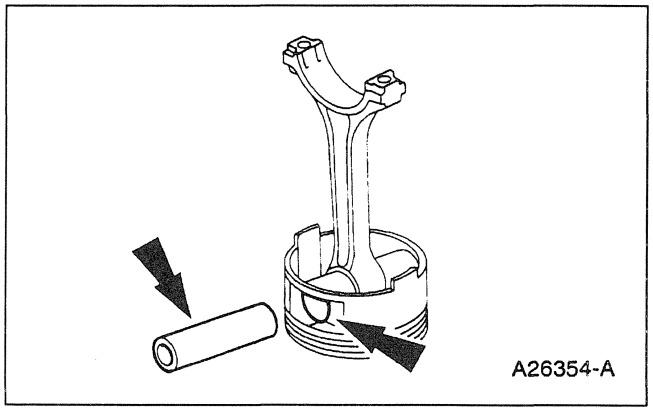

1. Lubricate the piston pin and piston bore.
   - Use engine oil meeting Ford specification WSS-M2C153-G.

DISASSEMBLY AND ASSEMBLY OF SUBASSEMBLIES (Continued)

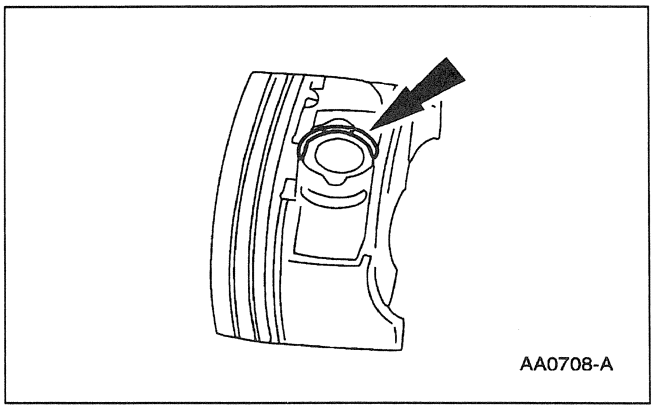
AA0708-A

2. Install a new retainer ring on one side of the piston pin bore.

3. Gradually heat the piston to approximately 100°C (212°F).

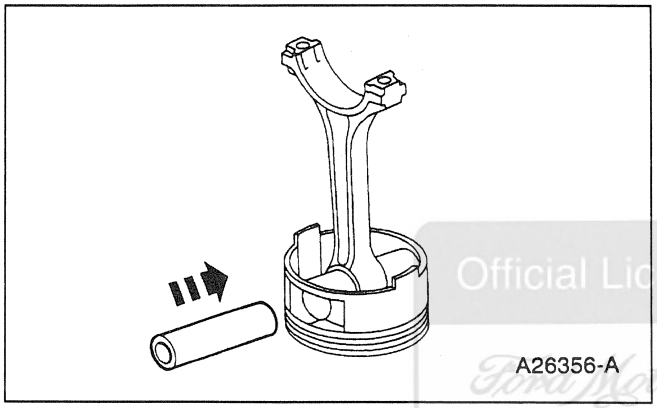
A26356-A

4. **NOTE:** The connecting rod can be installed in either direction.

   Position the piston pin in the bore aligned with the connecting rod bore.

Official Licensed Product
Ford Motor Company

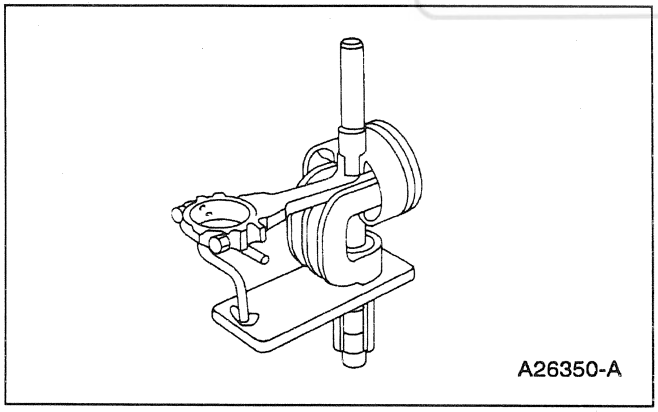
A26350-A

5. Use the Piston Pin Tool to press the piston pin into the piston and the connecting rod until the pin hits retaining ring.

DISASSEMBLY AND ASSEMBLY OF SUBASSEMBLIES (Continued)

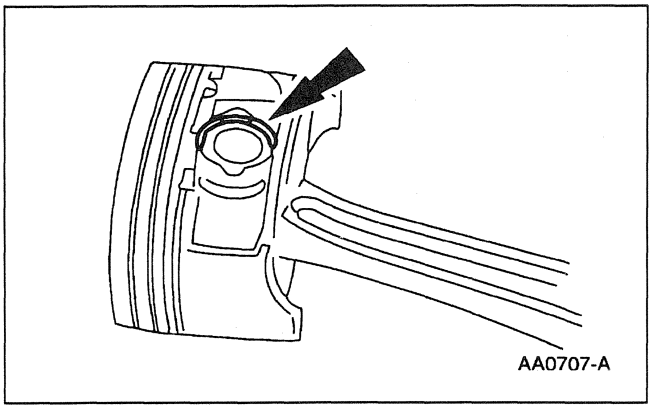

6. Install a new retainer ring on the other side of the piston pin bore.

7. After assembly, make sure the connecting rod swings smoothly on the connecting rod pin.

GENERAL PROCEDURES

Compression Test

Special Tool(s)

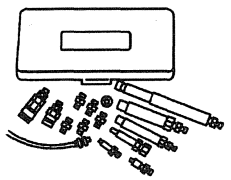 ST1691-A	Engine Cylinder Air Pressurization Kit 303-F011 (014-00707) or equivalent

Official Licensed Product
Ford Motor Company

Compression Gauge Check

1. Make sure the oil in the crankcase is of the correct viscosity and at the proper level. Make sure battery (10655) is properly charged. Operate the vehicle until the engine is at normal operating temperature. Turn the ignition switch OFF. Remove all spark plugs (12405) .

2. Install a compression gauge such as Compression Tester in the No. 1 cylinder.

3. Install an auxiliary starter switch in the starting circuit. Use the auxiliary starter switch, with the ignition switch off, to crank the engine a minimum of five compression strokes and record the highest reading. Note the approximate number of compression strokes required to obtain the highest reading.

GENERAL PROCEDURES (Continued)

4. Repeat the test on each cylinder, cranking the engine approximately the same number of compression strokes.

Test Results

1. The indicated compression pressures are considered within specification if the lowest reading cylinder is within 75 percent of the highest reading. Refer to the Compression Pressure Limit Chart.

COMPRESSION PRESSURE LIMIT CHART

Maximum kPa (PSI)	Minimum kPa (PSI)	Maximum kPa (PSI)	Minimum kPa (PSI)	Maximum kPa (PSI)	Minimum kPa (PSI)	Maximum kPa (PSI)	Minimum kPa (PSI)
924 (134)	696 (101)	1131 (164)	848 (123)	1338 (194)	1000 (145)	1544 (224)	1158 (168)
938 (136)	703 (102)	1145 (166)	855 (124)	1351 (196)	1014 (147)	1558 (226)	1165 (169)
952 (138)	717 (104)	1158 (168)	869 (126)	1365 (198)	1020 (148)	1572 (228)	1179 (171)
965 (140)	724 (105)	1172 (170)	876 (127)	1379 (200)	1034 (150)	1586 (230)	1186 (172)
979 (142)	738 (107)	1186 (172)	889 (129)	1393 (202)	1041 (151)	1600 (232)	1200 (174)
993 (144)	745 (108)	1200 (174)	903 (131)	1407 (204)	1055 (153)	1613 (234)	1207 (175)
1007 (146)	758 (110)	1214 (176)	910 (132)	1420 (206)	1062 (154)	1627 (236)	1220 (177)
1020 (148)	765 (111)	1227 (178)	917 (133)	1434 (208)	1076 (156)	1641 (238)	1227 (178)
1034 (150)	779 (113)	1241 (180)	931 (135)	1448 (210)	1083 (157)	1655 (240)	1241 (180)
1048 (152)	786 (114)	1255 (182)	938 (136)	1462 (212)	1089 (158)	1669 (242)	1248 (181)
1062 (154)	793 (115)	1269 (184)	952 (138)	1476 (214)	1103 (160)	1682 (244)	1262 (183)
1076 (156)	807 (117)	1282 (186)	965 (140)	1489 (216)	1117 (162)	1696 (246)	1269 (184)
1089 (158)	814 (118)	1296 (188)	972 (141)	1503 (218)	1124 (163)	1710 (248)	1282 (186)
1103 (160)	827 (120)	1310 (190)	979 (142)	1517 (220)	1138 (165)	1724 (250)	1289 (187)
1110 (161)	834 (121)	1324 (192)	993 (144)	1531 (222)	1145 (166)		

2. If one or more cylinders reads low, squirt approximately one tablespoon of clean engine oil meeting Ford specification WSS-M2C153-G on top of the pistons in the low-reading cylinders. Repeat the compression pressure check on these cylinders.

Interpreting Compression Readings

1. If compression improves considerably, the piston rings are damaged.

2. If the compression does not improve, the valves are sticking or seating improperly.

GENERAL PROCEDURES (Continued)

3. If two adjacent cylinders indicate low compression pressures and squirting oil on the piston (6108) does not increase the compression, the head gasket (6051) may be leaking between the cylinders. Engine oil and/or coolant in the cylinders could result from this condition.

   Use the Compression Pressure Limit Chart when checking the cylinder compression so that the lowest reading is within 75 percent of the highest reading.

Camshaft End Play

Special Tool(s)

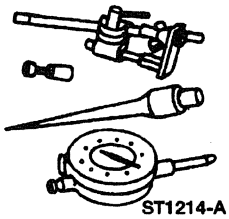 ST1214-A	Dial Indicator with Bracketry 100-002 (TOOL-4201-C) or equivalent

Official Licensed Product
Ford Motor Company

1. Remove the roller followers; refer to Roller Followers in this section.
2. Use Dial Indicator with Bracketry to measure camshaft end play.
3. Position the camshaft to the rear of the cylinder head.
4. Zero the Dial Indicator with Bracketry.
5. Move the camshaft to the front of the cylinder head. Note and record the camshaft end play.
   - If camshaft end play exceeds specifications, replace the camshaft and recheck end play.
   - If camshaft end play exceeds specifications after camshaft replacement, replace the cylinder head.

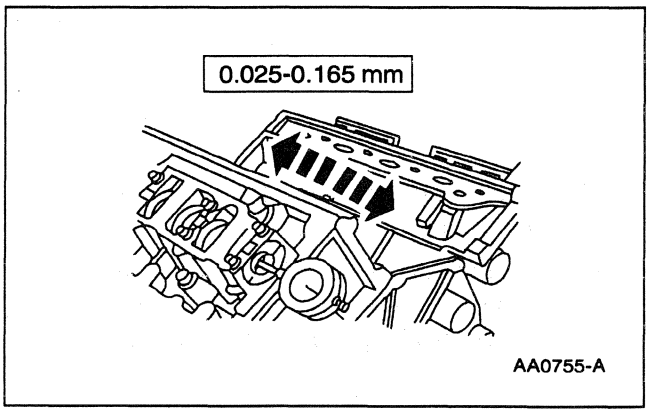

GENERAL PROCEDURES (Continued)

Camshaft Lobe Surface

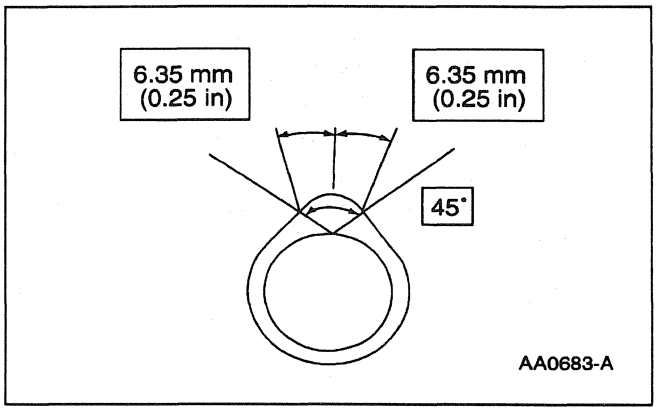

1. Inspect camshaft lobes for pitting or damage in the active area. Minor pitting is acceptable outside the active area.

Camshaft Lobe Lift

Special Tool(s)

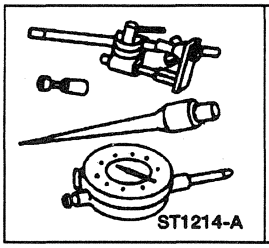 ST1214-A	Dial Indicator with Bracketry 100-002 (TOOL-4201-C) or equivalent

Official Licensed Product
Ford Motor Company

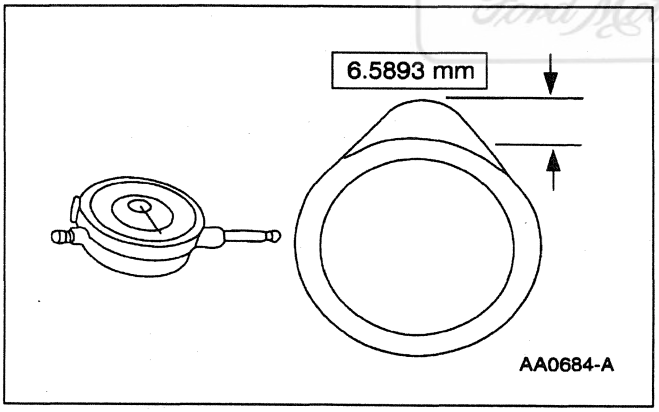

1. Use Dial Indicator with Bracketry to measure camshaft intake lobe lift.
   - Rotate the camshaft and subtract the lowest dial indicator reading from the highest dial indicator reading to figure the camshaft lobe lift.

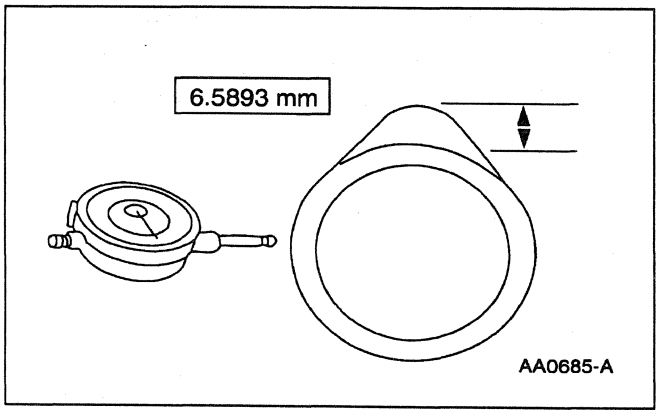

2. Use Dial Indicator with Bracketry to measure camshaft exhaust lobe lift.
   - Rotate the camshaft and subtract the lowest dial indicator reading from the highest dial indicator reading to figure the camshaft lobe lift.

GENERAL PROCEDURES (Continued)

Crankshaft Main Bearing Journal Diameter

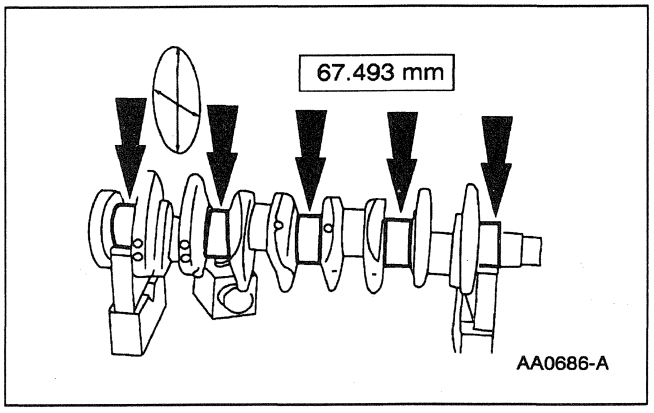

1. Measure each of the crankshaft main bearing journal diameters in at least two directions.
   - If it is out of specification, replace as necessary.

Crankshaft End Play

Special Tool(s)

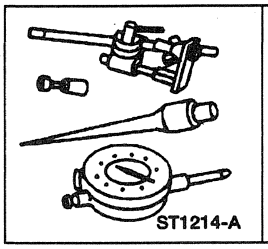 ST1214-A	Dial Indicator with Bracketry 100-002 (TOOL-4201-C) or equivalent

Official Licensed Product
Ford Motor Company

1. Measure the crankshaft end play. Use Dial Indicator with Bracketry to measure crankshaft end play.
2. Position the crankshaft to the rear of the cylinder block.
3. Zero the Dial Indicator with Bracketry.
4. Move the crankshaft to the front of the cylinder block. Note and record the crankshaft end play.
   - If crankshaft end play exceeds specifications, replace the crankshaft thrust washers or thrust bearing.

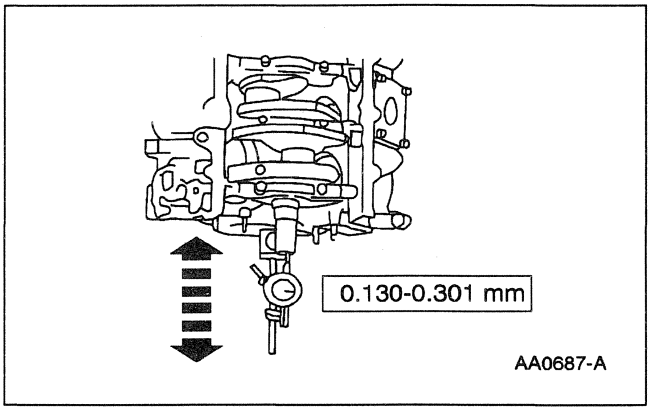

GENERAL PROCEDURES (Continued)

Crankshaft Runout

Special Tool(s)

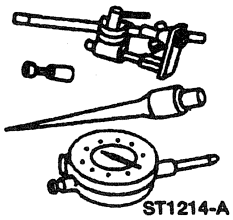 ST1214-A	Dial Indicator with Bracketry 100-002 (TOOL-4201-C) or equivalent

NOTE: Crankshaft main bearing journals must be within specifications before checking runout.

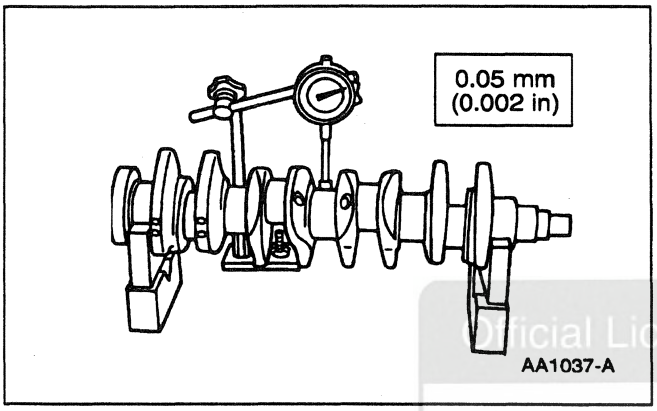

1. Use Dial Indicator with Bracketry to measure crankshaft runout.
   - Rotate the crankshaft and subtract the lowest dial indicator reading from the highest dial indicator reading to figure the crankshaft runout. If it is out of specification, replace as necessary.

Official Licensed Product
Ford Motor Company

Cylinder Bore Taper

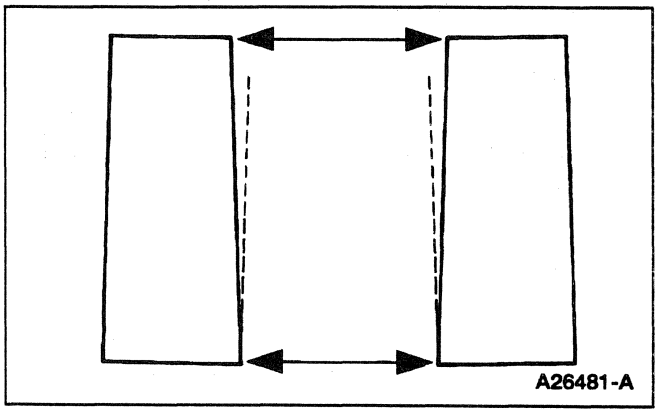

1. Measure the cylinder bore at the top and bottom. Verify the cylinder bore is within the wear limit. The difference indicates the cylinder taper, bore the cylinder to the next oversize.

GENERAL PROCEDURES (Continued)

Cylinder Bore Out-of-Round

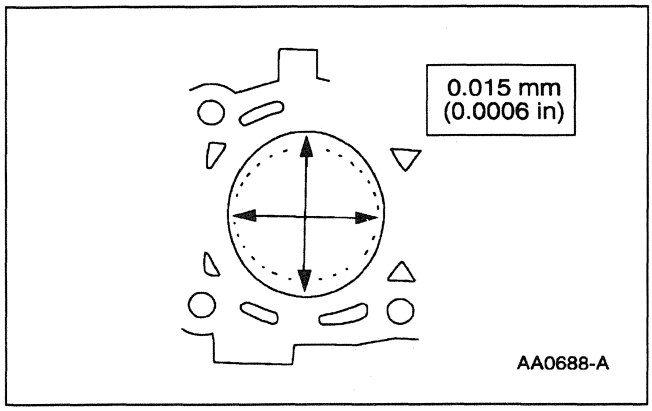

1. Measure the cylinder bore in two directions. The difference is the out-of-round. Verify the out-of-round is within the wear limit and bore the cylinder to the next oversize limit.

Piston Inspection

Special Tool(s)

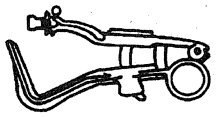 ST1279-A	Piston Ring Groove Cleaner 303-D033 (D81L-6002-D) or equivalent

Official Licensed Product
Ford Motor Company

⚠ CAUTION: Do not use a caustic cleaning solution or a wire brush to clean the piston, pin and ring or damage may occur.

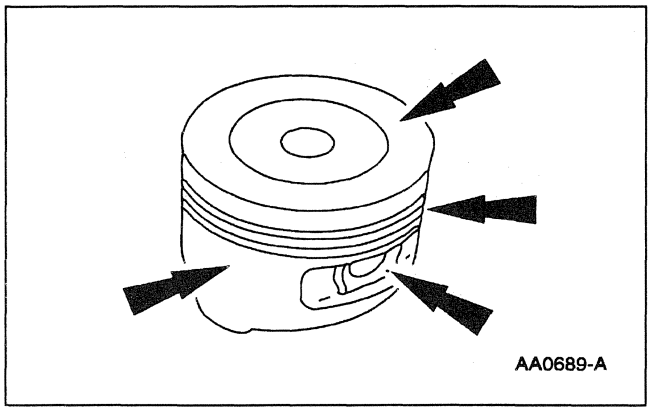

1. Clean and inspect the ring lands, skirts, pin bosses, and the top of the pistons. If wear marks or polishing is found on the piston skirt, check for a bent or twisted connecting rod.

GENERAL PROCEDURES (Continued)

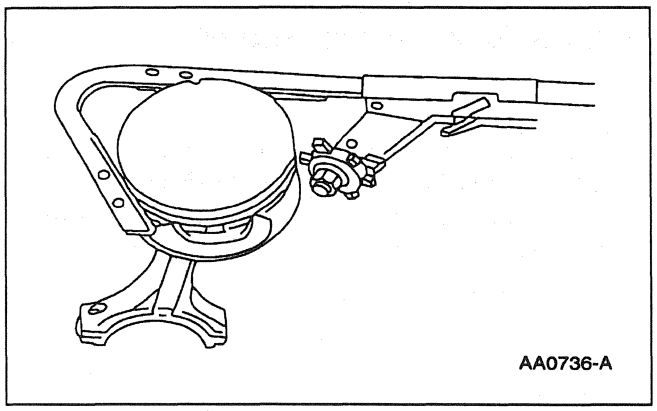

2. Use Piston Ring Groove to clean the piston ring grooves.
   - Make sure oil ring holes are clean.

Piston Pin Bore Diameter

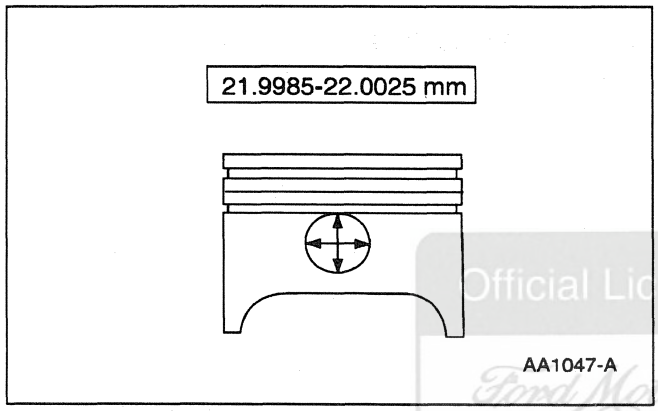

1. **WARNING: COVER THE END OF THE PIN BORE WITH A HAND OR SHOP RAG WHEN REMOVING THE RETAINER RING SINCE IT HAS A TENDENCY TO SPRING OUT. EYE PROTECTION SHOULD BE WORN.**

   NOTE: Piston and piston pins are a matched set and should not be interchanged.

   Measure the piston pin bore diameter in two directions on each side. Verify the diameter is within specification.
   - If it is out of specification, replace as necessary.

Official Licensed Product
Ford Motor Company

Piston Diameter

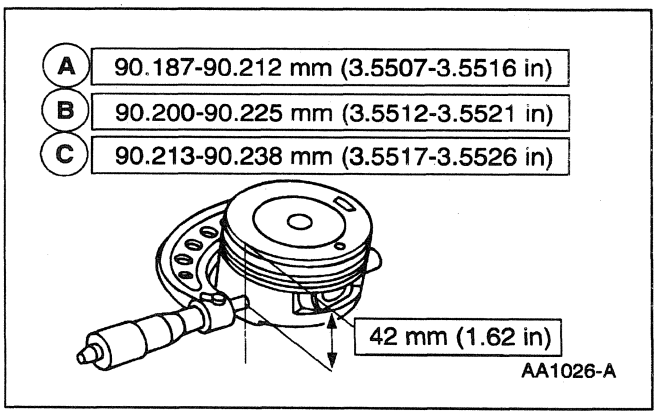

1. With piston pin removed, measure the piston skirt diameter as indicated. Pistons come in three color codes.
   - Coded red (A).
   - Coded blue (B).
   - Coded yellow (C).

GENERAL PROCEDURES (Continued)

Piston to Cylinder Bore Clearance

1. Subtract the piston diameter from the cylinder bore diameter to find the piston to cylinder bore clearance.

Piston Selection

NOTE: The cylinder bore must be within specifications for taper and out-of-round before fitting a piston.

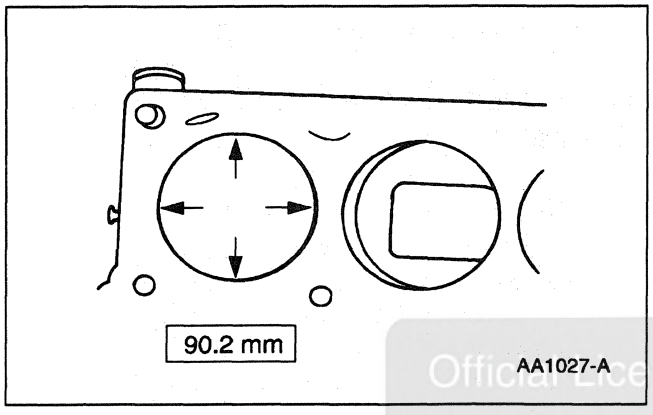

1. Select a piston size based on the cylinder bore.

Official Licensed Product
Ford Motor Company

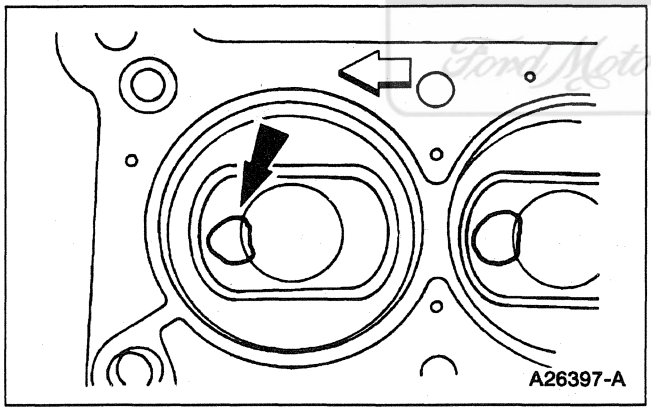

2. **NOTE:** For precision fit, new pistons are divided into three categories within each size range based on their relative position within the range. A paint spot on the new pistons indicates the position withing the size range.

   Choose the piston with the proper paint color.

   - Red—in the lower third of the size range.
   - Blue—in the middle third of the size range.
   - Yellow—in the upper third of the size range.

Piston Ring-to-Groove Clearance

Special Tool(s)

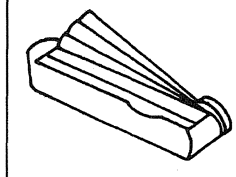 ST1271-A	Feeler Gauge 303-D027 (D81L-4201-A) or equivalent

1. Inspect for a step in the grooves.

GENERAL PROCEDURES (Continued)

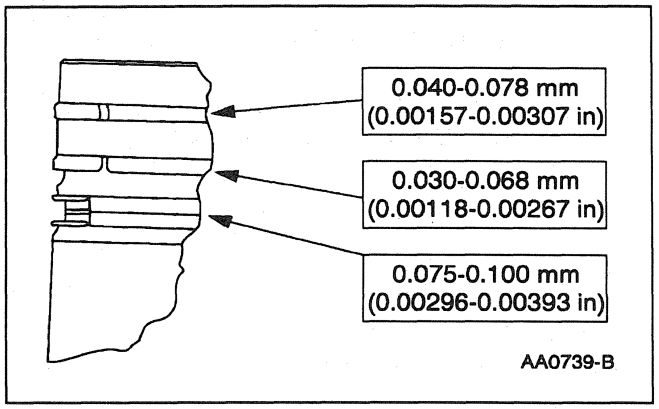

2. Measure the piston ring-to-groove clearance.

3. If it is out of specifications, replace as necessary.

Crankshaft Connecting Rod Journal Diameter

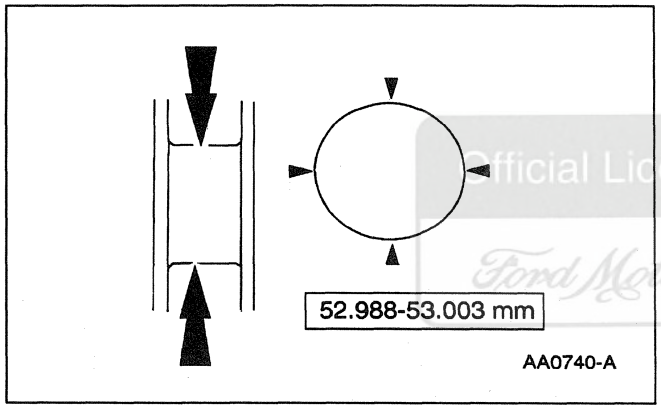

1. Measure the crankshaft connecting rod journal diameters in at least two directions perpendicular of one another. The difference between the measurements is the out-of-round. Verify the journal is within the wear limit specification.

Official Licensed Product
Ford Motor Company

Crankshaft Connecting Rod Journal Taper

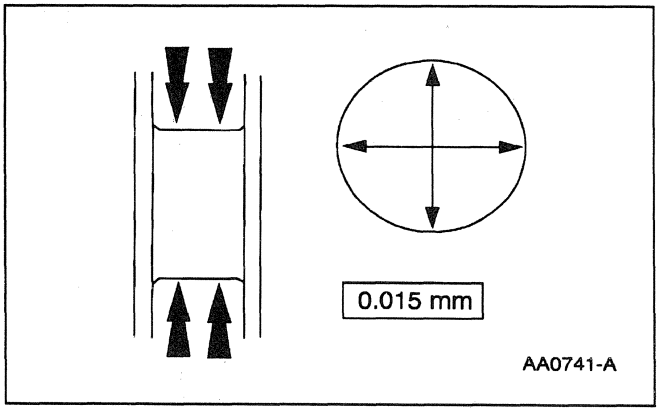

1. Measure the crankshaft connecting rod journal diameters in at least two directions perpendicular of one another. The difference in the measurements from one end to the other is the taper. Verify the measurement is within the wear limit.

GENERAL PROCEDURES (Continued)

Connecting Rod Cleaning

⚠ **CAUTION: Do not use a caustic cleaning solution or damage to connecting rods may occur.**

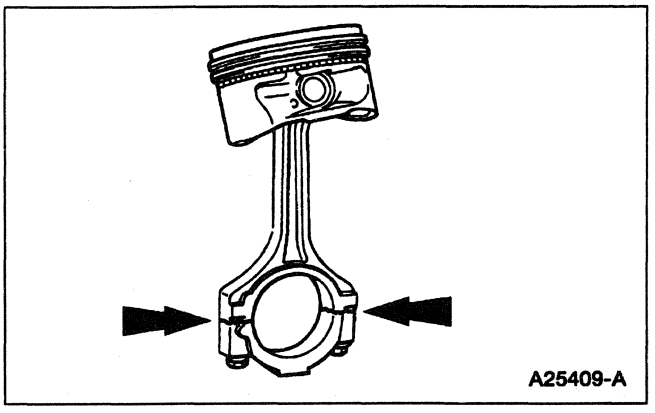

1. **NOTE:** The connecting rod large end is mechanically split to produce a unique parting face. This produces a locking joint. Parts are not interchangeable.

   Mark and separate the parts and clean with solvent.

Connecting Rod Large End Bore

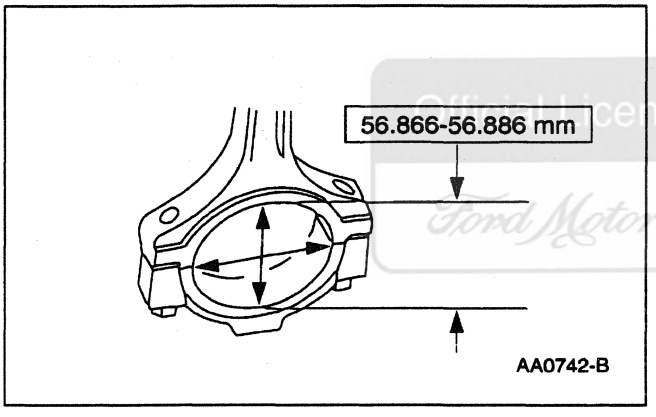

1. Measure the bore in two directions. The difference is the connecting rod bore out-of-round. Verify the out-of-round is within specification.

2. If it is out of specifications, replace as necessary.

Piston Pin Diameter

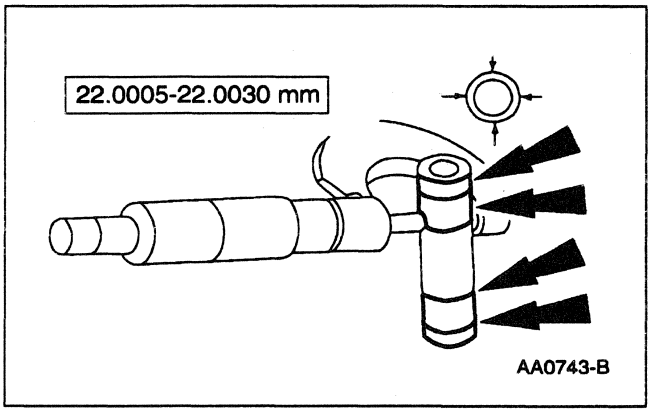

1. Measure the piston pin diameter in two directions at points shown. Verify the diameter is within specification.

GENERAL PROCEDURES (Continued)

Connecting Rod Bushing Diameter

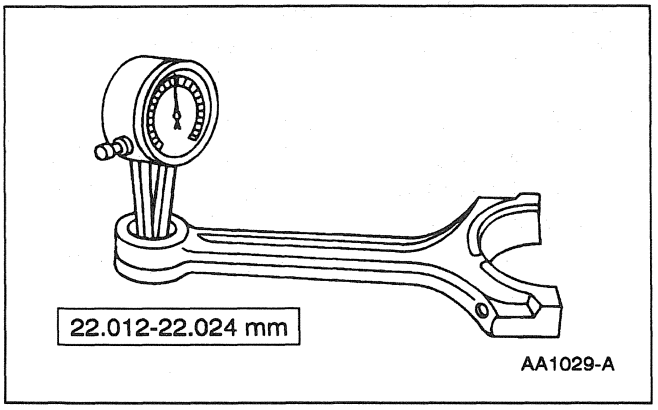

1. Measure the inner diameter of the connecting rod bushing. Verify the diameter is within specification.

2. If it is out of specifications, replace as necessary.

Connecting Rod Bend

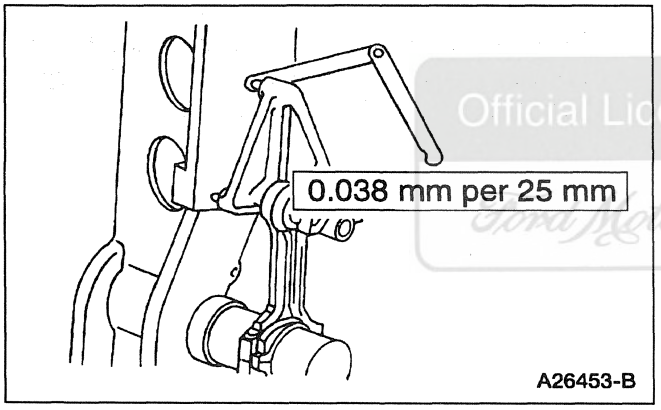

1. Measure the connecting rod bend on a suitable alignment fixture. Follow the instructions of the fixture manufacturer. Verify the bend measurement is within the specification.

2. If it is out of specifications, replace as necessary.

Connecting Rod Twist

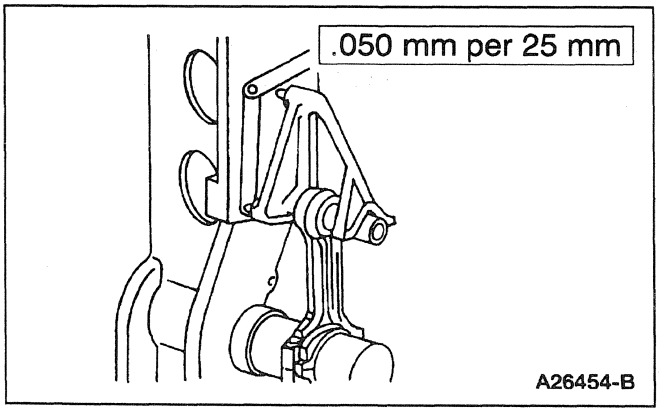

1. Measure the connecting rod twist on a suitable alignment fixture. Follow the instructions of the fixture manufacturer. Verify the measurement is within the specification.

Official Licensed Ford Motor Company

GENERAL PROCEDURES (Continued)

2. If it is out of specifications, replace as necessary.

Connecting Rod Bearing Journal Clearance

Special Tool(s)

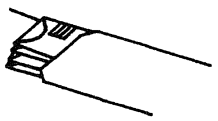 ST1280-A	Plastigage 303-D031 (D81L-6002-B) or equivalent

NOTE: The crankshaft connecting rod journals must be within specifications to check the connecting rod bearing journal clearance.

1. Remove the connecting rod bearing cap; refer to Engine Disassembly in this section.

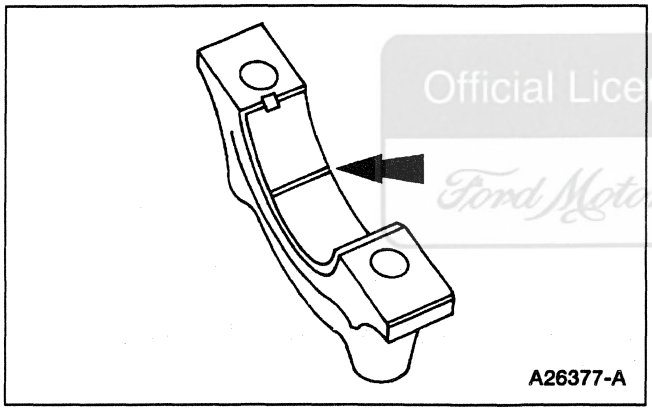

2. Position a piece of Plastigage across the bearing surface.

Official Licensed Product
Ford Motor Company

3. **NOTE:** Do not turn the crankshaft during this step.

   Install and torque to specifications, then remove the connecting rod bearing cap; refer to Engine Disassembly in this section.

GENERAL PROCEDURES (Continued)

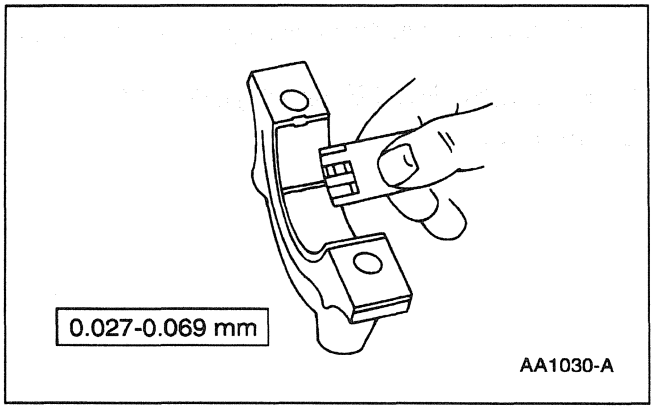

4. Measure the Plastigage to get the connecting rod bearing journal clearance. The Plastigage should be smooth and flat. A changing width indicates a tapered or damaged connecting rod bearing or connecting rod.

Roller Follower Inspection

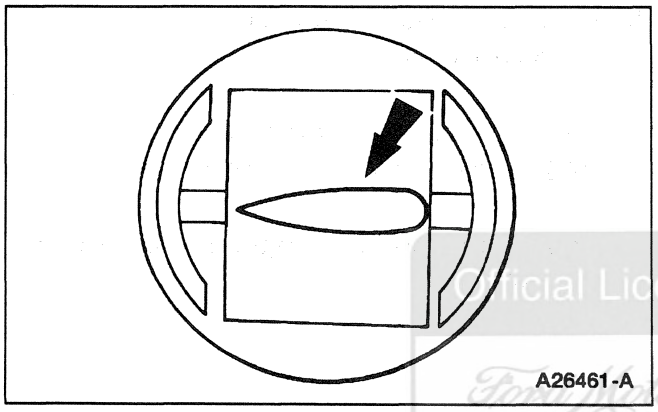

1. Inspect the roller for flat spots or scoring. If any damage is found, inspect the camshaft lobes and hydraulic lash adjusters for damage.

Official Licensed Product
Ford Motor Company

2. Replace parts as necessary.

Hydraulic Lash Adjuster Leakdown Test

1. **NOTE:** The leakdown test will not be accurate if it is done with engine oil in the hydraulic lash adjuster. Use testing fluid. New hydraulic lash adjusters are already filled with testing fluid.

   Compress the hydraulic lash adjuster to remove the engine oil if necessary.

GENERAL PROCEDURES (Continued)

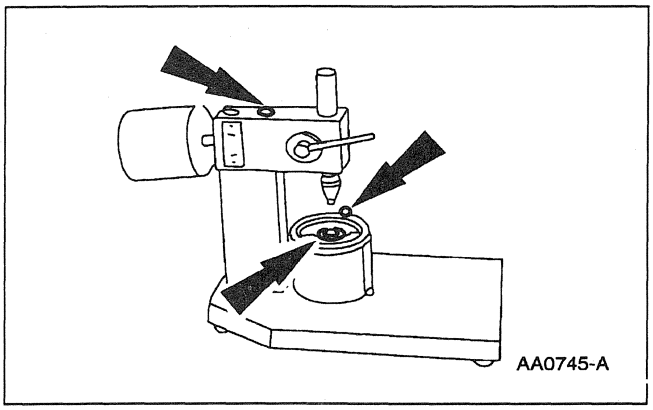

2. Place the hydraulic lash adjuster in a commercially available hydraulic tappet leakdown tester. Add testing fluid to cover the hydraulic lash adjuster and compress the hydraulic tappet leakdown tester until the hydraulic lash adjuster is filled with testing fluid.

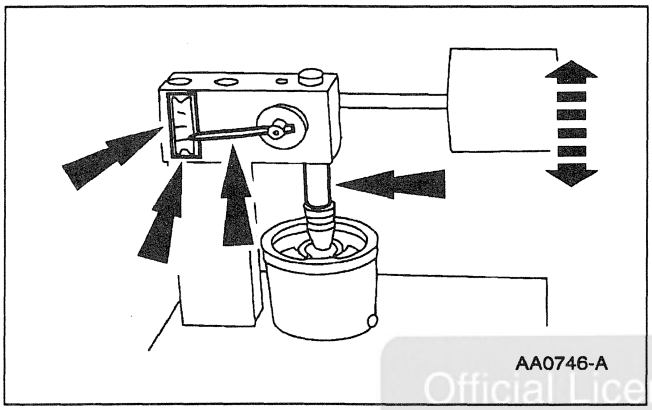

3. Adjust the length of the ram so that the pointer is just below the start timing mark when the ram contacts the hydraulic lash adjuster. Start timing as the pointer passes the start timing mark and end timing as the pointer reaches the center mark.

Official Licensed Product
Ford Motor Company

Valve Stem Diameter

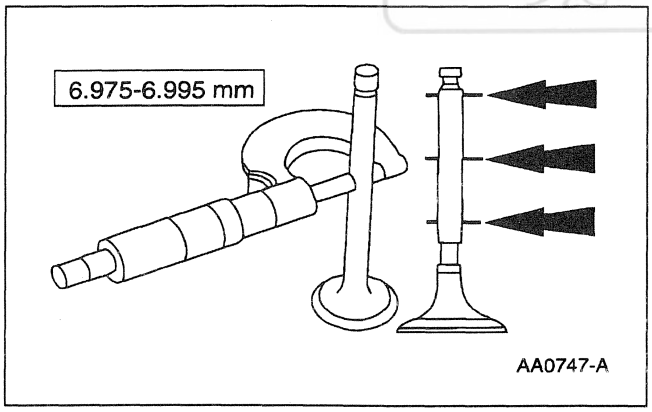

1. Measure the diameter of each intake valve stem at the points shown. Verify the diameter is within specification.

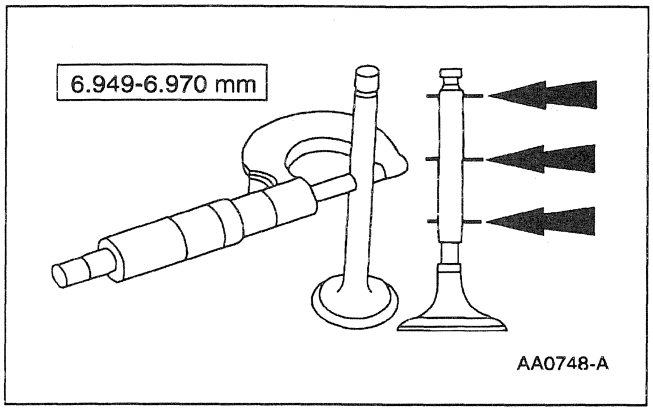

2. Measure the diameter of each exhaust valve stem at the points shown. Verify the diameter is within specification.

GENERAL PROCEDURES (Continued)

3. If it is out of specification, replace as necessary.

Valve Stem to Valve Guide Clearance

Special Tool(s)

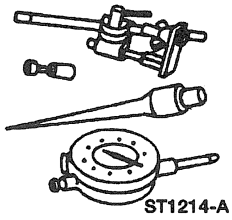 ST1214-A	Dial Indicator with Bracketry 100-002 (TOOL-4201-C) or equivalent
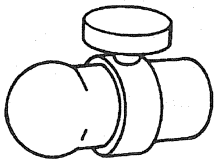 ST1251-A	Valve Stem Clearance Tool 303-004 (TOOL-6505-E) or equivalent

NOTE: Valve stem diameter must be within specifications before checking valve stem to valve guide clearance.

Official Licensed Product
Ford Motor Company

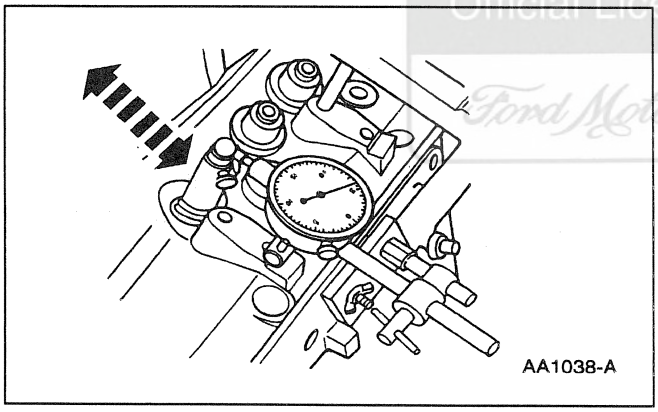

1. Install Valve Stem Clearance Tool on the valve stem and install Dial Indicator with Bracketry. Lower the valve until Valve Stem Clearance Tool contacts the upper surface of the valve guide.

2. Move the Valve Stem Clearance Tool toward the Dial Indicator and zero the Dial Indicator. Move the Valve Stem Clearance Tool away from the Dial Indicator and note the reading. The reading will be double the valve stem to valve guide clearance. Valves with oversize stems will need to be installed if out of specification.

GENERAL PROCEDURES (Continued)

Valve Inspection

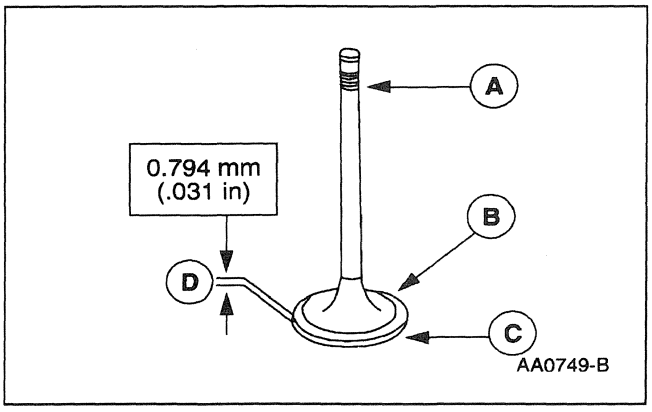

1. Inspect the following valve areas:
   - The end of the stem for grooves or scoring (A).
   - The valve face and the edge for pits, grooves or scores (B).
   - The valve head for signs of burning, erosion, warpage and cracking. Minor pits, grooves and other abrasions may be removed (C).
   - The valve head minimum thickness wear (D).

2. If it is out of specification, replace as necessary.

Valve Guide Inner Diameter

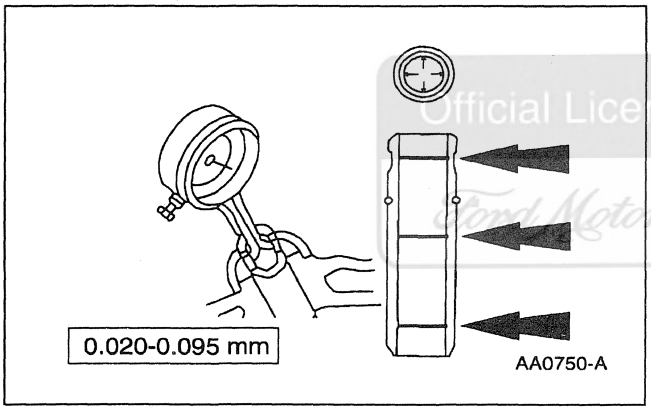

Official Licensed Product
Ford Motor Company

1. Measure the inner diameter of the valve guides in two directions where indicated.

2. If the valve guide is not within specifications, ream the valve guide and install a valve with an oversize stem or remove the valve guide and install a new valve guide.

GENERAL PROCEDURES (Continued)

Valve Spring Installed Length

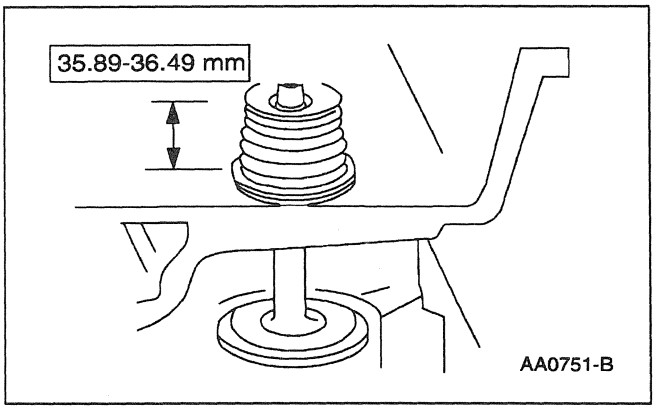

1. Measure the installed length of each valve spring.

2. If it is out of specification replace as necessary.

Valve Spring Free Length

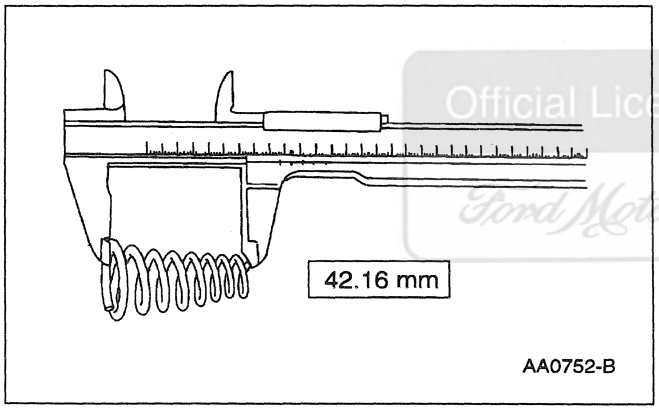

Official Licensed Product
Ford Motor Company

1. Measure the free length of each valve spring.

2. If it is out of specification replace as necessary.

Valve Spring Strength

Special Tool(s)

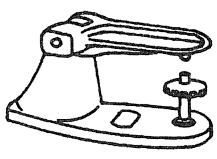 ST1278-A	Valve/Clutch Spring Tester 303-006 (TOOL-6513-DD) or equivalent

GENERAL PROCEDURES (Continued)

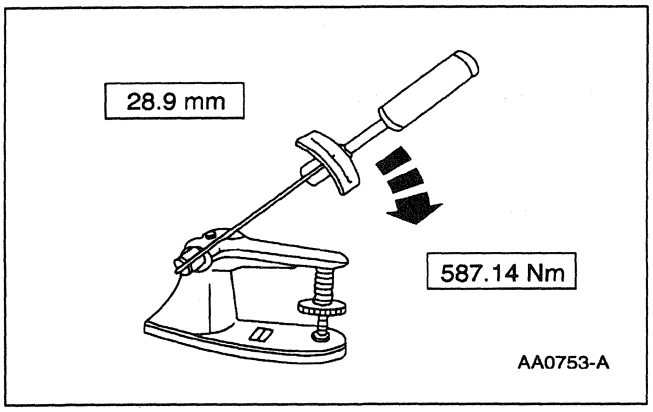

1. Use Valve/Clutch Spring Tester to check the valve springs for proper strength as the specified valve spring length.

2. If it is out of specifications, replace as necessary.

Valve Seat Inspection

Valve and Seat Refacing Measurements

⚠ CAUTION: After grinding valves or valve seats, check valve clearance.

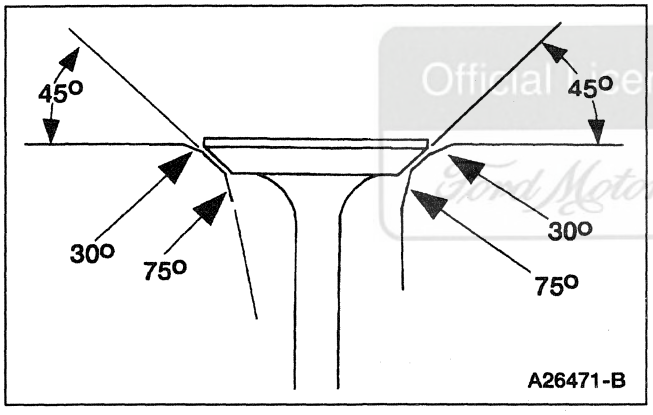

1. Check valve seat and valve angles.

Official Licensed Product
Ford Motor Company

2. If it is out of specifications, replace as necessary.

Valve Seat Width

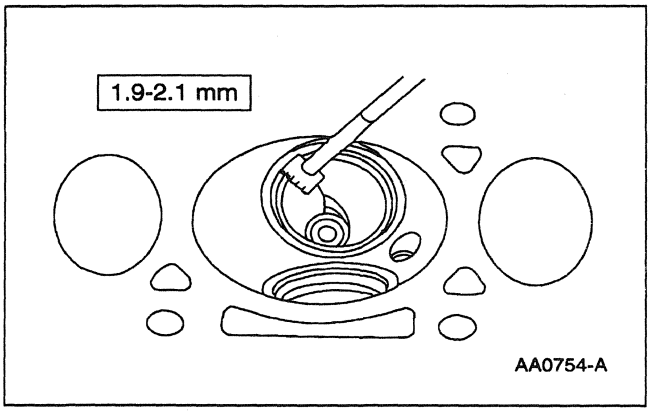

1. Measure the valve seat width. If necessary, grind the valve seat to specification.

GENERAL PROCEDURES (Continued)

2. If it is out of specifications, repair as necessary.

Valve Seat Runout

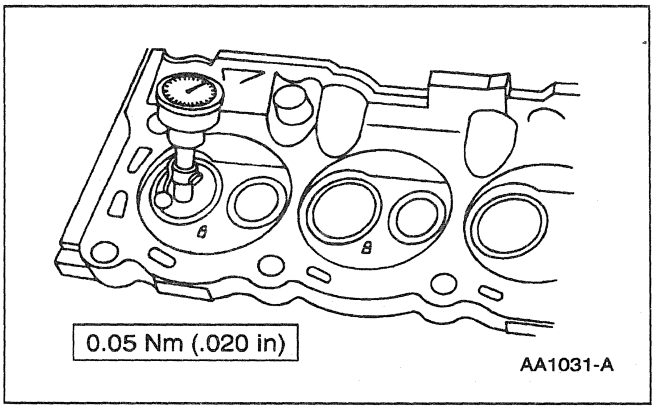

1. Use Valve Seat Runout Gauge to check valve seat runout.

2. If it is out of specifications, repair as necessary.

Flywheel Inspection

Special Tool(s)

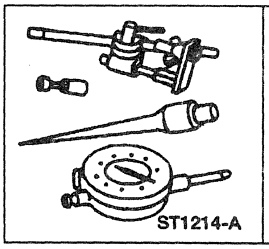 ST1214-A	Dial Indicator with Bracketry 100-002 (TOOL-4201-C) or equivalent

Official Licensed Product
Ford Motor Company

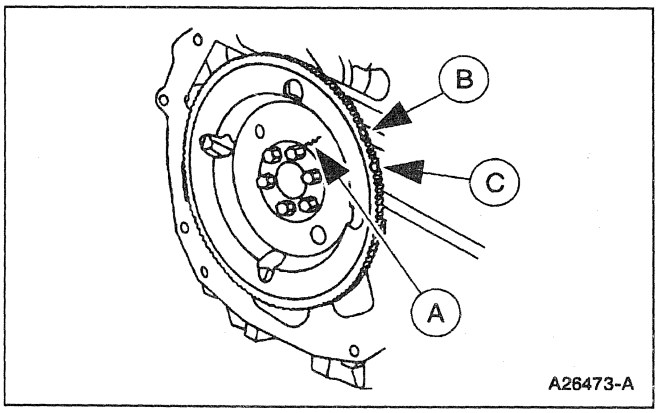

1. Inspect the flywheel for:
   - cracks (A).
   - Worn ring gear teeth (B).
   - chipped or cracked ring gear teeth (C).

2. If it is out of specifications, replace as necessary.

GENERAL PROCEDURES (Continued)

Cylinder Block Distortion

Special Tool(s)

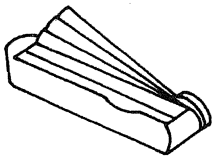 ST1271-A	Feeler Gauge 303-D027 (D81L-4201-A) or equivalent
ST1246-A	Straight Edge 303-D039 (D83L-4201-A) or equivalent

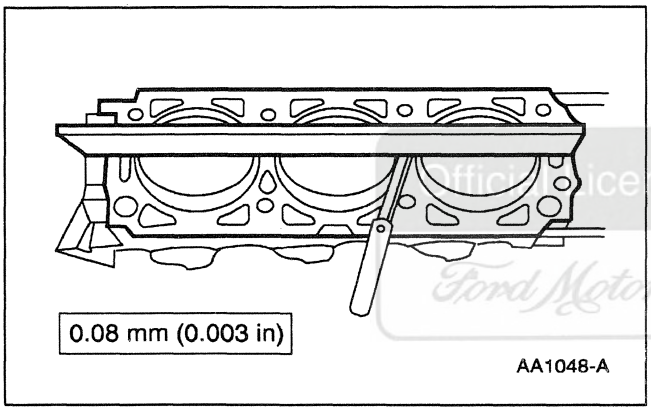

1. Use Straight Edge and Feeler Gauge to inspect the cylinder block for flatness. If the cylinder block (6010) is distorted, resurface the cylinder block within specification.

Officially Licensed Product
Ford Motor Company

2. If it is out of specifications, replace as necessary.

Cylinder Bore Honing

Special Tool(s)

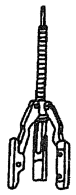 ST1709-A	Engine Cylinder Hone Set 303-S084 (T73L-6011-A)

GENERAL PROCEDURES (Continued)

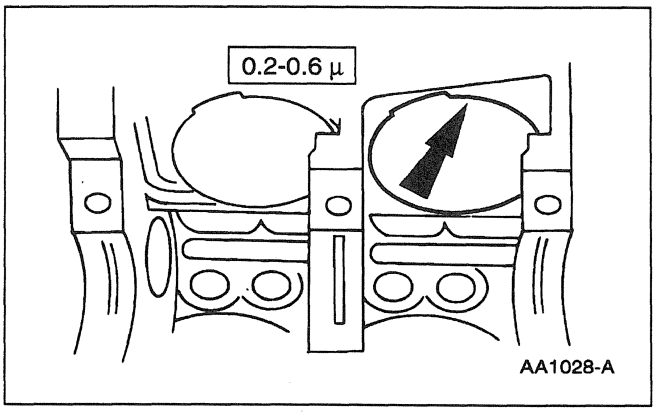

NOTE: Before any cylinder bore is honed, all main bearing caps must be installed so that the crankshaft bearing bores will become distorted.

NOTE: To correct taper or out-of-round, bore the cylinder block.

1. **NOTE:** Honing should be done when fitting new piston rings or to remove minor surface.

   Hone with Engine Cylinder Hone Set at a speed of 300-500 rpm and a hone grit of 180-220 to provide the desired cylinder bore surface finish.

2. If it is out of specifications, replace as necessary.

Cylinder Bore Cleaning

Official Licensed Product
Ford Motor Company

1. **CAUTION: If these procedures are not followed, rusting of the cylinder bores may occur.**

   Clean the cylinder bores with soap or detergent and water.

2. Thoroughly rinse with clean water and wipe dry with a clean, lint-free cloth.

3. Immediately use a clean, lint-free cloth and lubricate the cylinder bores.
   - Use clean engine oil meeting Ford specification WSS-M2C153-G.

Cylinder Block Core Plug Replacement

Special Tool(s)

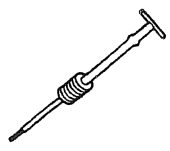 ST1185-A	Impact Slide Hammer 100-001 (T50T-100-A)

GENERAL PROCEDURES (Continued)

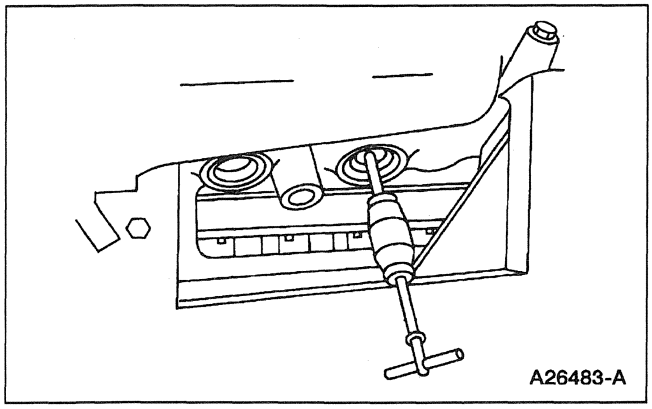

1. Use Impact Slide Hammer to remove the cylinder block core plug.

2. Inspect the cylinder block plug bore for any damage that would interfere with the proper sealing of the plug. If the cylinder block plug bore is damaged, bore for the next oversize plug.

3. **NOTE:** Oversize plugs are identified by the "OS" stamped in the flat located on the cup side of the plug.

   Coat the cylinder block core plug and bore lightly with Threadlock 262 E2FZ-19554-B or equivalent meeting Ford specification WSK-M2G351-A6 and install the cylinder block core plug.

Official Licensed Product
Ford Motor Company

Exhaust Manifold Inspection

Special Tool(s)

ST1246-A	Straight Edge 303-D039 (D83L-4201-A) or equivalent

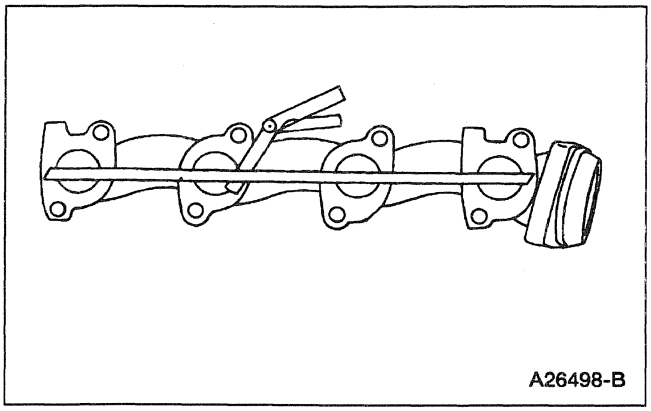

1. Place a straightedge across the exhaust manifold flanges and check for warping with a feeler gauge.

GENERAL PROCEDURES (Continued)

2. If it is out of specification, replace as necessary.

Bearing Inspection

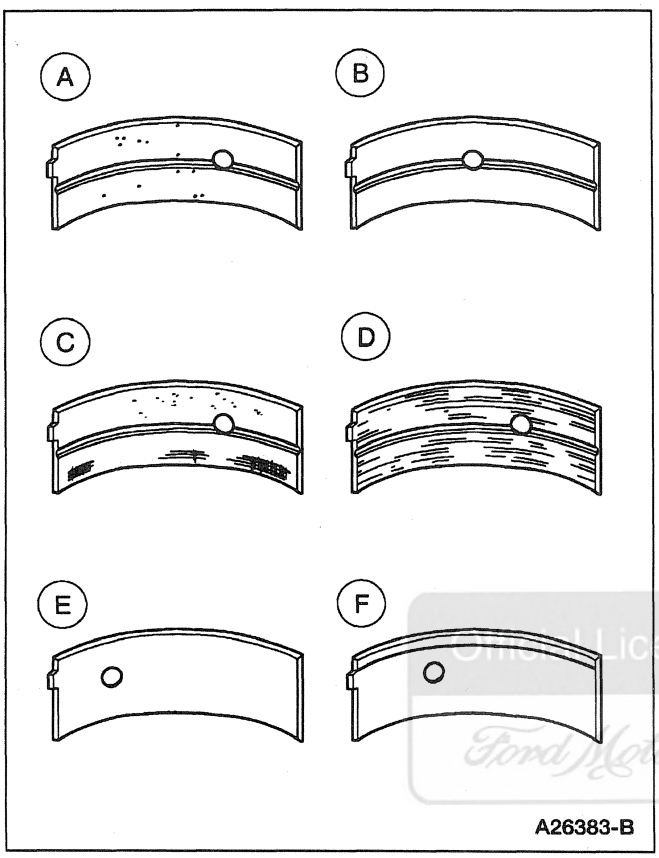

1. Inspect bearings for the following defects. Possible causes are shown:
   - Catering—fatigue failure (A).
   - Spot polishing—improper seating (B).
   - Scratching—dirty (C).
   - Base exposed—poor lubrication (D).
   - Both edges worn—journal damaged (E).
   - One edge worn—journal tapered or bearing not seated (F).

Ford Licensed Product
Ford Motor Company

2. If it is out of specification, replace as necessary.

SPECIFICATIONS

General Specifications

Item	Specification
Silicone Gasket and Sealant F6AZ-19562-AA	WSE-M4G323-A6
Premium Engine Coolant E2FZ-19549-AA	ESE-M97B44-A
Pipe Sealant with Teflon® D8AZ-19554-A	WSK-M2G350-A2 and ESR-M18P7-A
Motorcraft Super Premium 5W-30 Motor Oil XO-5W-30-QSP	WSS-M2C153-G API Certification SJ
Fluorescent Tracer Dye Rotunda 164-R3705	ESE-M99C103-B1

(Continued)

General Specifications

Item	Specification
Stud and Bearing Mount E0AZ-19554-BA	WSK-M2G349-A1
Thread Lock 262 E2F2-19554-B	WSK-M2G351-A6

Engine Specifications

Description	Specification
GENERAL SPECIFICATIONS	
Displacement	4.6L (4V) (281 CID)
Number of Cylinders	8

(Continued)

SPECIFICATIONS (Continued)

Engine Specifications

Description	Specification
Bore and Stroke	90.2 x 90.0 mm (3.55 x 3.54 inch)
Firing Order	1-3-7-2-6-5-4-8
Oil Pressure (HOT 1500 RPM)	138-310 kPa
Drive Belt Tension	[a]
CYLINDER HEAD AND VALVE TRAIN	
• Head Gasket Face Flatness • Head Gasket Surface Finish[b]	0.10 mm (0.004 inch) MAX overall
Combustion Chamber Volume (cc)	52.6±1.5 cm [c]
Valve Seats	
• Width—Intake	1.8-2.2 mm (0.071-0.086 inch)
• Width—Exhaust	1.8-2.2 mm (0.071-0.086 inch)
• Angle	45 degrees
• Runout (T.I.R.) Max	0.05 mm (0.020 inch)
Valve Arrangement (Front-to-Rear) [c]	
• (Left Hand) Intake:	S-P-S-P-S-P-S-P
• Exhaust:	E-E-E-E-E-E-E-E
• (Right Hand) Intake:	P-S-P-S-P-S-P-S
• Exhaust: (C)	E-E-E-E-E-E-E-E
Valve Stem to Guide Clearance	
• Intake	0.020-0.069 mm (0.00078-0.00272 inch)
• Exhaust	0.046-0.095 mm (0.0018-0.0037 inch)
Valve Head Diameter	
• Intake	37 mm (1.46 inch)
• Exhaust	30 mm (1.18 inch)
• Gauge Diameters	35.0 and 28.0 mm (1.378-1.102 inch)
Valve Face Runout Limit	0.05 mm (0.002 inch)
Valve Face Angle	45.5 degrees
Valve Stem Diameter (Std)	
• Intake	6.975-6.995 mm (0.2754-0.2746 inch)
• Exhaust	6.949-6.970 mm (0.2744-0.2736 inch)
Valve Springs	
• Compression Pressure (N (Lb) @ Spec Length)	

(Continued)

Engine Specifications

Description	Specification
• Intake	711.47 N @ 26.19 mm (159.9 Lb-Ft @ 1.031 inch)
• Exhaust	711.47 N @ 26.19 mm (159.9 Lb-Ft @ 1.031 inch)
• Free Length (Approximate)	
• Intake	42.16 mm (1.6598 inch)
• Exhaust	42.16 mm (1.6598 inch)
• Installed Pressure (N (Lb-Ft) @ Spec. Length)	
• Intake	289.1 N @ 36.14 mm (64.99 Lb-Ft @ 1.4228 inch)
• Exhaust	289.1 N @ 36.14 mm (64.99 Lb-Ft @ 1.4228inch)
• Service Limit	10% Pressure Loss @ 28.02 mm (1.103 inch)
Roller Follower	
• Ratio	1.8:1
Hydraulic Lash Adjuster	
• Diameter (Std)	16.000-15.988 mm (0.6299-0.6294 inch)
• Clearance to Bore	0.018-0.069 mm (0.000709-0.002717 inch)
• Service Limit	0.016 mm (1.0006299 inch)
• Hydraulic Leakdown Rate[d]	5-25 seconds
• Collapsed Lash Adjuster Gap—Desired	0.80-1.20 mm (0.0315-0.0472 inch)
CAMSHAFT	
Lobe Lift	
• Intake (Primary)	5.57472 mm (0.219477 inch)
• Intake (Secondary)	5.55672 mm (0.218768 inch)
• Exhaust	5.55152 mm (0.218563 inch)
• Allowable Lobe Lift Loss	
Theoretical Valve Lift @ Zero Lash	
• Intake (Primary)	10.0 mm (0.3937 inch)
• Intake (Secondary)	10.0 mm (0.3937 inch)
• Exhaust	10.0 mm (0.3937 inch)

(Continued)

Official Licensed Product Ford Motor Company

SPECIFICATIONS (Continued)

Engine Specifications

Description	Specification
End Play	0.025-0.165 mm (0.00098-0.00649 inch)
• Service Limit	0.190 mm (0.007480 inch)
Journal to Bearing Clearance	0.025-0.076 mm (0.00098-0.002992 inch)
• Service Limit	0.100 mm (0.003937 inch) MAX
Journal Diameter (All)	26.962-26.936 mm (1.0615-1.0605 inch)
Bearing Inside Diameter (All)	27.012-26.987 mm (1.0635-1.0625 inch)
Front Bearing Location	[e]
CYLINDER BLOCK	
• Head Gasket Face Flatness • Head Gasket Surface Finish[b]	0.15 mm (0.006 in) MAX overall
Main Bearing Bore Diameter	72.400-72.424 mm (2.8504-2.8513 inch)
CRANKSHAFT	
Main Bearing Journal Diameter	67.481-67.505 mm (2.6567269-2.6576718 inch)
Connecting Rod Journal	
• Diameter	52.983-53.003 mm (2.085941-2.086728 inch)
Crankshaft Free End Play	0.130-0.301 mm (0.005118-0.011850 inch)
Crankshaft Runout to Rear Face of Block	0.050 mm (0.01969 inch) MAX
Connecting Rod Bearings	
Clearance to Crankshaft	
• Desired	0.027-0.069 mm (0.0010629-0.0027165 inch)
• Allowable	0.027-0.069 mm (0.0010629-0.0027165 inch)
Bearing Wall Thickness (Std)[f]	1.920-1.928 mm (0.075591-0.075905 inch)
Main Bearings	
Clearance to Crankshaft	
• Desired	0.025-0.045 mm (0.00098-0.00177 inch)

(Continued)

Engine Specifications

Description	Specification
• Allowable	0.025-0.050 mm (0.00098-0.00197 inch)
Bearing Wall Thickness (Std)[f]	2.451 mm (0.0965 inch)
Connecting Rod	
• Pin Bore Diameter	22.012-22.024 mm (0.86661-0.86708 inch)
• Crankshaft Bearing Bore Diameter	56.866-56.886 mm (2.23881-2.23960 inch)
• Length (Center-to-Center)	150.7 mm (5.933 inch)
Alignment (Bore-To-Bore Max. Diff.)[g]	
• Twist	0.050 per 25 mm (0.00197 per 0.9843 inch)
• Bend	0.038 per 25 mm (0.00150 per 0.9843 inch)
Side Clearance (Assembled to Crank)	
• Standard	0.15-0.45 mm (0.00591-0.01772 inch)
• Service Limit	0.50 mm (0.01969 inch) MAX
CYLINDER BORE AND PISTON	
Cylinder Bore	
Diameter[h]	
• Surface Finish (RMS)	0.2-0.6 Microns
• Out-of-Round Limit	0.015 mm (0.000591 inch)
• Out-of-Round Service Limit	0.020 mm (0.000787 inch)
• Taper Service Limit	0.006 mm
Piston	
• Diameter[i]	
• Coded Red 1	90.200-90.213 mm (3.55117-3.551686 inch)
• Coded Blue 2	90.213-90.226 mm (3.551686-3.552198 inch)
• Coded Yellow 3	90.226-90.239 mm (3.552198-3.55271 inch)
Piston-to-Bore Clearance	-0.010/+0.026 mm (-0.0003937/+0.0010236 inch)

(Continued)

Ford Licensed Product

SPECIFICATIONS (Continued)

Engine Specifications

Description	Specification
Pin Bore Diameter	21.9985-22.0025 mm (0.866081-0.866238 inch)
Ring Groove Width	
• Compression (Top)	1.530-1.550 mm (0.06024-0.06102 inch)
• Compression (Bottom)	1.520-1.540 mm (0.05984-0.06062 inch)
• Oil Ring	3.030-3.055 mm (0.11929-0.12028 inch)
Piston Pin	
• Length	61.601-62.030 mm (2.42523-2.44212 inch)
• Diameter	22.0005-22.0030 mm (0.8661596-0.8662581 inch)
Pin to Piston Fit[j]	-0.0045/+0.002 mm (-0.000177/+0.0000787 inch)
Pin to Rod Clearance	
• Standard	0.004-0.0175 mm (0.000157-0.00689 inch)
• Service Limit	0.035 mm (0.001378 inch)
Oil Ring	1.15 mm (0.04528 inch) MAX
• Side Clearance	
• Compression (Top)	0.0090-0.0235 mm (0.000354-0.000925 inch)
• Compression (Bottom)	0.030-0.080 mm (0.00118-0.00315 inch)
• Oil Ring	Snug Fit
Ring Gap[k]	
• Compression (Top)	0.25-0.51 mm (0.0098-0.0201 inch)
• Compression (Bottom)	0.23-0.49 mm (0.009055-0.01929 inch)
• Oil Ring (Steel Rail)	0.15-0.66 mm (0.00591-0.02598 inch)
Piston Rings	
• Ring Gap	
• Compression (Top)	1.00 mm (0.03937 inch) MAX
• Compression (Bottom)	1.00 mm (0.03937 inch) MAX
• Service Limit	1.15 mm (0.04528 inch) MAX

(Continued)

Engine Specifications

Description	Specification
LUBRICATION SYSTEM	
Oil Capacity (Quarts U.S.)	6 ± 0.25[l]

a Newly Installed—Refers to the condition of the "NEW" drive belt before the engine has made no more than one rotation and before the belt has had a chance to stretch or seat into the pulley grooves.
b Head Gasket Surface—WT = 10.0 minus 2.5 Microns. Head Gasket Surface Finish-RZU—13.5 0.8 TPI 63% MIN. Ra 3.0-3.5 J80. This ID is obtained using a hand-held profilometer.
c P=Primary, S=Secondary, E=Exhaust
d Time required for plunger to leak down 1.6 mm of travel with 222 N force and leak down fluid in tappet.
e Distance front edge of bearing is installed below front face of cylinder block.
f 0.050 Undersize—add 0.025 to standard thickness.
g Pin bore and crank bearing bore must be parallel and in same vertical plane within the specified total difference when measured at the ends of a 203 mm bar, 101.5 mm on each side of rod centerline.
h Cylinder Bore Diameter
Red—90.200-90.213
Blue—90.213-90.226
Yellow—90.226-90.239
i Measured at 42 mm from piston dome, at 90 degrees to the piston pin.
j Piston pin outer diameter is larger than piston pin bore, providing a possible interference fit.
k Specification in 90.200 mm diameter gauge.
l With filter change.

DRIVE BELT TENSION

Belt Type	Belt Tension
6 Rib (Fixed)[a]	110-120 Lbs

a "Fixed" refers to systems with manually-adjusted centers which are bolted in place and considered fixed.

Torque Specifications

Description	Nm	Lb/Ft	Lb/In
Air Cleaner Outlet Tube to Throttle Body Bolt	1.8-2.6	—	16-23
Air Cleaner Outlet Tube Clamp	1.7-3.3	—	15-29
Engine Air Cleaner Outlet Tube Bracket Clamp	5.1-7.1	—	45-63

(Continued)

SPECIFICATIONS (Continued)

Torque Specifications

Description	Nm	Lb/Ft	Lb/In
Engine Air Cleaner Outlet Tube Bracket-to-Valve Cover Nuts	8-12	—	71-106
Main Bearing Cap Adjusting Screws (a)	—	—	—
Main Bearing Cap Adjusting Screw Bolts (b)	—	—	—
Camshaft Sprocket Bolt	110-130	81-95	—
Connecting Rod Bolt (c)	—	—	—
Engine Front Cover Bolt	20-30	15-22	—
Drive Belt Tensioner Bolts	20-30	15-22	—
Drive Belt Idler Pulley Bolt	20-30	15-22	—
Engine Lifting Eyes	40-50	30-37	—
Cylinder Head Bolt (d)	—	—	—
Pulley to Crankshaft Bolt (i)	—	—	—
EGR Valve to Intake Manifold (j)	—	—	—
EGR Vacuum Regulator Solenoid Brackets Nuts	8-12	—	71-106
Exhaust Manifold-to-Cylinder Head Nuts	18-22	14-16	—
Lower Intake Manifold-to-Cylinder Head Bolt (e) (f)	—	—	—
Main Bearing Cap—Bolt (g) (f)	—	—	—
Low Oil Level Sensor	20-30	15-22	—
Oil Filter Adapter Bolt	20-30	15-22	—
Oil Bypass Filter to Adapter (h)	—	—	—
Oil Pump Screen Cover and Tube-to-Oil Pump Bolt	8-12	—	71-106
Oil Pan Drain Plug	11-16	8-12	—
Oil Pan-to-Cylinder Block Bolt (k)	—	—	—
Oil Pan-to-Engine Front Cover Bolts (k)	—	—	—
Oil Pump-to-Cylinder Block Bolt	8-12	—	71-106

(Continued)

Torque Specifications

Description	Nm	Lb/Ft	Lb/In
Oil Pump Screen Cover and Tube-to-Main Bearing Cap Stud Spacer Bolt	20-30	15-22	—
Water Pump Pulley Bolts	20-30	15-22	—
Generator to Cylinder Block	20-30	15-22	—
Valve Cover Bolt	8-12	—	71-106
Water Pump-to-Cylinder Block Bolt	20-30	15-22	—
Flywheel Bolts	73-87	54-64	—
HO2S	37-45	27-33	—
EGR Tube Connector	45-65	33-48	—
EGR Valve to Exhaust Manifold Tube Nuts	40-45	30-33	—
Exhaust Manifold Nuts	18-22	14-16	—
Engine Insulators	20-30	15-22	—
Front Engine Support Insulator Through Bolts	20-30	15-22	—
Power Steering Pump to Engine	20-30	15-22	—
Power Steering Pump Reservoir Retaining Bolts	8-12	—	71-106
Fuel Injection Supply Manifold Retaining Bolts	8-12	—	71-106
Rear Oil Seal Retainer Screws	8-12	—	71-106
Outlet Heater Water Hose Retaining Stud Bolts	20-30	15-22	—
Camshaft Cap Cluster to Cylinder Head	8-12	—	71-106
Engine to Transmission Retaining Bolts	40-60	30-44	—
Inlet Heater Water Tube to RH Cylinder Head	8-12	—	71-106
Front Suspension Upper Arm-to-Front Wheel Hub and Spindle	68-92	50-68	—
Front Suspension Lower Arms to Strut Bolt	160-220	118-162	—
IMRC Bolts to Intake (f)	8-10	—	71-89
Water Bypass Tube Nuts	8-12	—	71-106
Torque Converter Retaining Nuts	30-35	22-25	—

(Continued)

Official Licensed Product

SPECIFICATIONS (Continued)

Torque Specifications

Description	Nm	Lb/Ft	Lb/In
Timing Chain Tensioner Bolts—Primary	20-30	15-22	—
Timing Chain Tensioner Bolts—Secondary	8-12	—	71-106
A/C Compressor Retaining Bolts	20-30	15-22	—
CKP and CMP Sensor Retaining Bolts	8-12	—	71-106
ECT Sensor	16-24	12-17	—
Idle Air Control Valve Bolts	8-12	—	71-106
Coolant Temperature Switch	16-24	12-17	—
Throttle Body Bolts (l)	—	—	—
Spark Plugs	16-20	12-15	—
Ignition Coil Cover Bolts	8-12	—	71-106
Air Cleaner Outlet Tube Support Bracket Retainers	8-12	—	71-106
Fuel Injection Supply Manifold Retaining Screws	8-12	—	71-106
Generator Mounting Bracket Retainers	8-12	—	71-106
Oil Level Indicator Tube Retainer	8-12	—	71-106

(Continued)

Torque Specifications

Description	Nm	Lb/Ft	Lb/In
Front Sub-Frame to Body Bolts	95-130	70-96	—
Rear Engine Support Insulator-to-Support	20-30	15-22	—
Primary Timing Chain Guide-to-Engine Bolts	8-12	—	71-106
Timing Chain Tensioner Arm Bolts	10-15	7-11	—
Oil Pressure Sensor	12-16	9-12	—
Accelerator Cable Bracket	8-12	—	71-106
Air Valve Assembly to Front Cover Bolts	8-12	—	71-106
Battery Cable Harness Bracket to Front Cover Bolt	8-12	—	71-106
Air Tube to Air Valve Nuts	32-48	24-35	—
Air Tube to Exhaust Manifold Fittings	32-48	24-35	—
Air Tube Fittings to Exhaust Manifold	32-48	24-35	—
Rear Axle Assembly-to-Rear Sub-Frame Nuts	98-120	72-89	—

(Continued)

Official Licensed Ford Motor Company

SPECIFICATIONS (Continued)

Torque Specifications

Description	Nm	Lb/Ft	Lb/In
Rear Axle Differential Nuts	102-127	75-8	—
Driveshaft Centering Socket Yoke-to-Rear Axle Universal Joint Flange Bolts	95-130	70-96	—

A. Tighten in 2 steps:
   a. 5 Nm (44 Lb-In)
   b. 10 Nm (89 Lb-In)

B. Tighten in 2 Steps:
   a. 10 Nm (7 Lb-Ft)
   b. 19-23 Nm (14-17 Lb-Ft)

C. Tighten in 2 steps:
   a. 25-35 Nm (18-25 Lb-Ft)
   b. rotate 85-95 degrees

D. Tighten in 3 steps:
   a. 37-43 Nm (27-32 Lb-Ft)
   b. rotate 85-95 degrees
   c. rotate 85-95 degrees

E. Tighten 1-20 in numerical sequence as follows:
   a. 5, 7, 9 and 11 to 12-15 Nm (8.8-11.0 Lb-Ft) all others 18-22 Nm (13-16 Lb-Ft)

F. Rotate in numerical sequence 85-95 degrees.

G. Tighten fasteners in sequence as shown:
   a. Fasteners 1 through 8 to 8-12 Nm (71-106 Lb-In)
   b. Fasteners 10 through 18 to 8-12 Nm (71-106 Lb-In)
   c. Seat thrust washer
   d. Fasteners 9, 10, 19 and 20 in order to 8-12 Nm (71-106 Lb-In)
   e. Fasteners 1 through 10 to 22-28 Nm (16-21 Lb-Ft)
   f. Fasteners 11 through 20 to 37-43 Nm (27-32 Lb-Ft)

H. 3/4 turn after gasket contacts sealing surface.

I. Tighten in 4 Steps:
   a. 90 Nm (66 Lb-Ft)
   b. Loosen one complete turn
   c. 47-53 Nm (35-39 Lb-Ft)
   d. rotate 85-95 degrees

J. Tighten in 2 Steps:
   a. 18-22 Nm (14-16 Lb-Ft)
   b. rotate 90 degrees

K. Tighten in 2 Steps:
   a. 20 Nm (15 Lb-Ft)
   b. rotate 60 degrees

L. Tighten in 2 Steps:
   a. 8-10 Nm (71-88 Lb-In)
   b. rotate 85-95 degrees

Official Licensed Product Ford Motor Company

SECTION 303-03 Engine Cooling

VEHICLE APPLICATION: Mark VIII

SUBJECT **PAGE**

DESCRIPTION AND OPERATION
Engine Cooling 303-03-2
DIAGNOSIS AND TESTING
Engine Cooling 303-03-4
Component Tests 303-03-12
Inspection and Verification 303-03-4
Pinpoint Tests 303-03-5
Symptom Chart 303-03-4
REMOVAL AND INSTALLATION
Bypass Tube 303-03-20
Degas Bottle 303-03-33
Fan — Motor, Fan Blade and Shroud 303-03-27
Hose — Radiator 303-03-28
Housing, Thermostat 303-03-19
Motor, Fan 303-03-31
Radiator 303-03-22
Sensor — Engine Coolant Temperature (ECT) 303-03-34
Thermostat 303-03-17
Water Pump 303-03-22
GENERAL PROCEDURES
Backflushing — Heater Core 303-03-43
Cooling System Draining, Filling and Bleeding 303-03-38
Cooling System Inspection 303-03-35
Flushing — Engine and Radiator 303-03-42
SPECIFICATIONS 303-03-45

Official Licensed Product
Ford Motor Company

DESCRIPTION AND OPERATION

Engine Cooling

Engine Cooling System

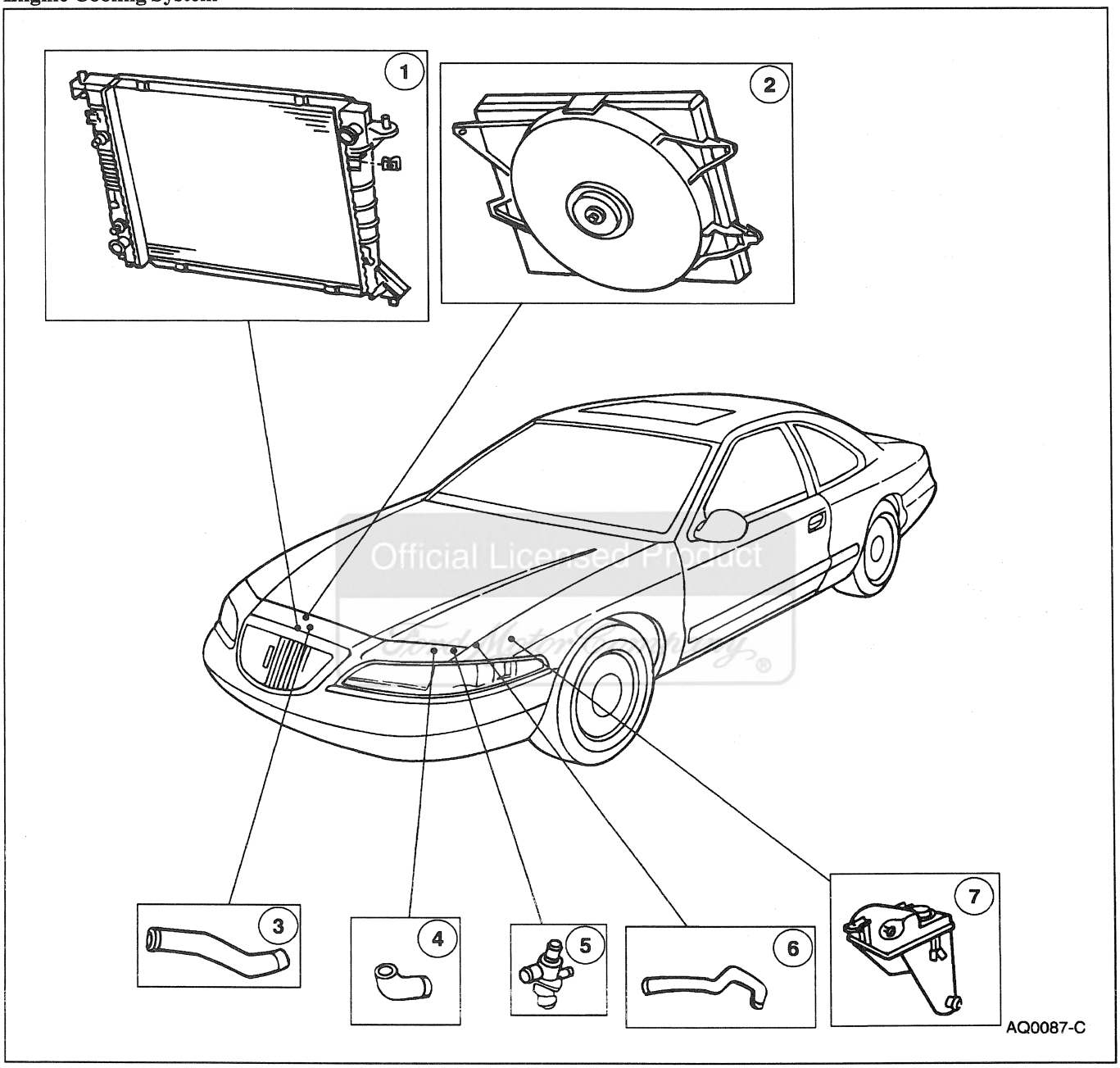

Item	Part Number	Description
1	8005	Radiator
2	8C607	Fan Motor
3	8260	Upper Radiator Hose
4	8286	Lower Radiator Hose

Item	Part Number	Description
5	8592	Water Hose Connection
6	8075	Radiator Overflow Hose
7	8A080	Radiator Coolant Recovery Reservoir

(Continued)

DESCRIPTION AND OPERATION (Continued)

Walter C. Avrea, the owner of patents 3,601,181 and RE 27,965, has granted Ford Motor Company rights with respect to cooling systems covered by these patents.

The cooling system includes the following:

- block heater (6A051)
- engine coolant temperature sensor (ECT sensor)(12A648) — 4.6L engine
- fan blade (8600)
- fan clutch (8A616)
- fan shroud (8146)
- radiator (8005)
- pressure relief cap
- degas bottle
- radiator draincock (8115)
- water pump (8501)
- water temperature indicator sender unit (10884)
- water thermostat (8575)
- oil filter adapter (6881)
- the radiator allows excess engine heat to be transferred to the air.
- radiator tanks cannot be serviced, replace as an assembly.

The water pump circulates the coolant.

The water thermostat :

- controls the engine coolant temperature.
- allows quicker engine warm-up.

The radiator coolant recovery reservoir (8A080) :

- holds surplus engine coolant when hot.
- returns the engine coolant back to the radiator when cool.

The degas bottle:

- provides a location for service fill.
- contains coolant expansion and system pressurization.
- provides air separation during operation.
- replenishes the engine coolant to the system.

The fan blade draws air through the radiator to help cool the engine coolant.

The fan clutch is a thermostatically controlled clutch that controls the fan drive.

The fan motor (8C607) :

- operates only when the ignition switch is in the RUN position.
- will not operate with the switch in the OFF position.

The engine coolant flows:

- from the lower radiator hose (8286) to the water pump.
- from the water pump to the engine block and the cylinder heads.

A closed water thermostat returns the engine coolant to the water pump; an open water thermostat allows the engine coolant to flow to the radiator.

Recycled coolant:

- use Ford Rotunda recycled engine coolant
- Ford Specification ESE-M97B44-A

Unsatisfactory coolant materials:

- alcohol-type antifreeze does not provide adequate water pump lubrication
  - — has lower boiling point
  - — reduced antifreeze protection
- alkaline brine solutions will cause serious engine cooling system damage

The water temperature indicator sender unit provides a signal to the temperature gauge.

The optional block heater :

- electrical heating element is installed in the core plug opening.
  - — uses a standard 110V electrical supply
- keeps the engine coolant warm during cold weather.

Official Licensed Product
Ford Motor Company

DIAGNOSIS AND TESTING

Engine Cooling

Special Tool(s)

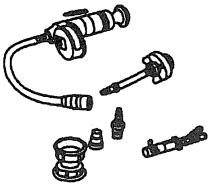 ST1474-A	Radiator/Heater Core Pressure Tester 014-R1072 or equivalent
ST1137-A	Rotunda 73 Digital Multimeter 105-R0051 or equivalent
ST1491-A	Digital Photoelectric Tachometer 055-00108 or equivalent
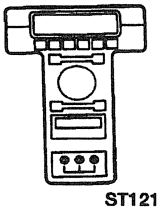 ST1217-A	New Generation Star Tester (NGS) 418-F052 (007-00520) or equivalent

Inspection and Verification

1. Verify the customer's concern by operating the engine to duplicate the condition.
2. Inspect to determine if any of the following mechanical or electrical concerns apply.

Visual Inspection Chart

Mechanical	Electrical
• Leaks • Damaged hoses • Loose/damaged hose clamps • Damaged water gasket • Damaged head gaskets • Damaged intake manifold gasket • Damaged water pump • Damaged radiator • Damaged degas bottle • Damaged heater core • Damaged fan/fan clutch	• Damaged engine coolant temperature sensor • Damaged wiring

3. If the inspection reveals an obvious concern that can be readily identified, repair it as required.
4. If the concern remains after the inspection, determine the symptom(s) and go to the Symptom Chart.

Official Licensed Product Ford Motor Company

Symptom Chart

SYMPTOM CHART

Condition	Possible Source	Action
• Loss of Engine Coolant	• Radiator. • Water pump seal. • Radiator hoses. • Heater hoses. • Heater core. • Engine gaskets. • Degas bottle.	• GO to Pinpoint Test A.
• The Engine Overheats	• Water thermostat. • Water pump. • Internal engine coolant leak. • Radiator. • Heater core. • Cooling fan. • Pressure relief cap.	• GO to Pinpoint Test B.

DIAGNOSIS AND TESTING (Continued)

SYMPTOM CHART (Continued)

Condition	Possible Source	Action
• The Cooling Fan Operates Continuously	• Circuit. • Variable load control module. • Powertrain control module. • Engine coolant temperature sensor.	• REFER to the Powertrain Control/Emissions Diagnosis Manual [1].
• The Cooling Fan Is Inoperative	• Circuit. • Variable load control module. • Powertrain control module. • Cooling fan motor.	• REFER to the Powertrain Control/Emissions Diagnosis Manual [1].
• The Cooling Fan Runs With No Low Speed	• Circuit. • Variable load control module. • Powertrain control module. • Cooling fan motor.	• REFER to the Powertrain Control/Emissions Diagnosis Manual [1].
• The Cooling Fan Runs With No High Speed	• Circuit. • Variable load control module. • Powertrain control module. • Cooling fan motor.	• REFER to the Powertrain Control/Emissions Diagnosis Manual [1].
• The Engine Does Not Reach Normal Operating Temperature	• Water thermostat.	• GO to Pinpoint Test C.
• The Block Heater Does Not Operate Properly	• Block heater power cable. • Block heater.	• GO to Pinpoint Test D.

Pinpoint Tests

Official Licensed Product

PINPOINT TEST A: LOSS OF COOLANT

TEST CONDITIONS	TEST DETAILS/RESULTS/ACTIONS
A1 CHECK THE ENGINE COOLANT LEVEL	
NOTE: Allow the engine to cool before checking the engine coolant level.	
1 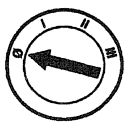	2 Visually check the engine coolant level at the degas bottle. • Is the engine coolant level within specification? → **Yes** GO to **A2.** → **No** REFILL the engine coolant as necessary. GO to **A6.**

(Continued)

1 Can be purchased as a separate item.

DIAGNOSIS AND TESTING (Continued)

PINPOINT TEST A: LOSS OF COOLANT (Continued)

TEST CONDITIONS	TEST DETAILS/RESULTS/ACTIONS
A2 CHECK THE PRESSURE RELIEF CAP	
	1 Perform the pressure relief cap test; refer to Cap in this section. • Is pressure relief cap OK? → **Yes** GO to **A3**. → **No** REPLACE the damaged pressure relief cap. TEST the system for normal operation.
A3 CHECK THE ENGINE COOLANT FOR INTERNAL LEAK	
1 	2 Inspect the engine coolant in degas bottle for signs of transmission fluid or engine oil. • Is oil or transmission fluid evident in coolant? → **Yes** If engine oil is evident, GO to Section 303-01. If transmission fluid is evident, REPAIR or REPLACE the radiator as necessary. → **No** GO to **A4**.
A4 CHECK THE ENGINE AND THE TRANSMISSION FOR COOLANT	
	1 Remove the oil level dipsticks from the engine and the transmission. • Is coolant evident in oil or transmission fluid? → **Yes** If coolant is in engine, GO to Section 303-01. If coolant is in transmission , REPAIR or REPLACE the radiator as necessary. GO to Section 307-01 to repair the automatic transmission. → **No** GO to **A5**.

(Continued)

Official Licensed Reproduction
Ford Motor Company

DIAGNOSIS AND TESTING (Continued)

PINPOINT TEST A: LOSS OF COOLANT (Continued)

TEST CONDITIONS	TEST DETAILS/RESULTS/ACTIONS
A5 PRESSURE TEST THE ENGINE COOLING SYSTEM	
	1 Pressure test the engine cooling system; refer to the Component Tests in this section. • Does the engine cooling system leak? → **Yes** REPAIR or REPLACE leaking components. TEST the system for normal operation. → **No** The cooling system is operational. RETURN to the Symptom Chart.
A6 CHECK THE COOLANT RECOVERY SYSTEM	
	1 **⚠ WARNING: NEVER REMOVE THE PRESSURE RELIEF CAP UNDER ANY CONDITIONS WHILE THE ENGINE IS OPERATING. FAILURE TO FOLLOW THESE INSTRUCTIONS COULD RESULT IN DAMAGE TO THE COOLING SYSTEM OR ENGINE AND/OR PERSONAL INJURY. TO AVOID HAVING SCALDING HOT COOLANT OR STEAM BLOW OUT OF THE COOLING SYSTEM, USE EXTREME CARE WHEN REMOVING THE PRESSURE RELIEF CAP FROM A HOT DEGAS BOTTLE. WAIT UNTIL THE ENGINE HAS COOLED, THEN WRAP A THICK CLOTH AROUND THE PRESSURE RELIEF CAP AND TURN IT SLOWLY ONE TURN (COUNTERCLOCKWISE). STEP BACK WHILE THE PRESSURE IS RELEASED FROM THE COOLING SYSTEM. WHEN CERTAIN ALL THE PRESSURE HAS BEEN RELEASED, REMOVE THE PRESSURE RELIEF CAP (STILL WITH A CLOTH).** Allow the engine to cool. 2 Remove the pressure relief cap.

(Continued)

Official Licensed Ford Motor Co

DIAGNOSIS AND TESTING (Continued)

PINPOINT TEST A: LOSS OF COOLANT (Continued)

TEST CONDITIONS	TEST DETAILS/RESULTS/ACTIONS
A6 CHECK THE COOLANT RECOVERY SYSTEM (Continued)	
	[3] Inspect the pressure relief cap for foreign material between the sealing gasket and the diaphragm. • Is the pressure relief cap OK? → **Yes** GO to A7. → **No** CLEAN or REPLACE the pressure relief cap. TEST the system for normal operation. GO to **A1**.
A7 CHECK THE DEGAS BOTTLE	
	[1] **NOTE:** The engine must be cool when coolant is added to the degas bottle. Add coolant to the degas bottle until fluid is between the coolant fill level marks. • Does the degas bottle leak? → **Yes** REPLACE the degas bottle. TEST the system for normal operation. → **No** PERFORM the cooling system pressure test; REFER to the Pressure Test in this section. REPAIR as necessary. TEST the system for normal operation.

Official Licensed Product
Ford Motor Company

DIAGNOSIS AND TESTING (Continued)

PINPOINT TEST B: THE ENGINE OVERHEATS

TEST CONDITIONS	TEST DETAILS/RESULTS/ACTIONS
B1 CHECK THE ENGINE COOLANT LEVEL	
NOTE: If the engine is hot, allow the engine to cool before proceeding.	
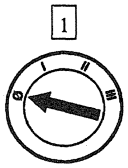	1 **WARNING: NEVER REMOVE THE PRESSURE RELIEF CAP UNDER ANY CONDITIONS WHILE THE ENGINE IS OPERATING. FAILURE TO FOLLOW THESE INSTRUCTIONS COULD RESULT IN DAMAGE TO THE COOLING SYSTEM OR ENGINE AND/OR PERSONAL INJURY. TO AVOID HAVING SCALDING HOT COOLANT OR STEAM BLOW OUT OF THE COOLING SYSTEM, USE EXTREME CARE WHEN REMOVING THE PRESSURE RELIEF CAP FROM A HOT DEGAS BOTTLE. WAIT UNTIL THE ENGINE HAS COOLED, THEN WRAP A THICK CLOTH AROUND THE PRESSURE RELIEF CAP AND TURN IT SLOWLY ONE TURN (COUNTERCLOCKWISE). STEP BACK WHILE THE PRESSURE IS RELEASED FROM THE COOLING SYSTEM. WHEN CERTAIN ALL THE PRESSURE HAS BEEN RELEASED, REMOVE THE PRESSURE RELIEF CAP (STILL WITH A CLOTH).** 2 Check the engine coolant level at the degas bottle. • Is the engine coolant OK? → **Yes** GO to **B2**. → **No** REFILL the engine coolant at the degas bottle. GO to Pinpoint Test A.
B2 CHECK THE COOLANT CONDITION	
	1 Check the coolant for contaminants such as rust, corrosion, or discoloration. • Is the coolant condition OK? → **Yes** GO to **B3**. → **No** FLUSH the engine cooling system; REFER to Flushing—Engine and Radiator in this section. TEST the system for normal operation.

(Continued)

Official Licensed Ford Motor Company

DIAGNOSIS AND TESTING (Continued)

PINPOINT TEST B: THE ENGINE OVERHEATS (Continued)

TEST CONDITIONS	TEST DETAILS/RESULTS/ACTIONS
B3 CHECK FOR AN AIRFLOW OBSTRUCTION	
	1 Inspect the A/C condenser core and radiator for obstructions such as leaves or dirt. • Is there an obstruction? → **Yes** REMOVE the obstruction. CLEAN the A/C condenser core and radiator . TEST the system for normal operation. → **No** GO to **B4**.
B4 CHECK THE HEATER CORE OPERATION	
1 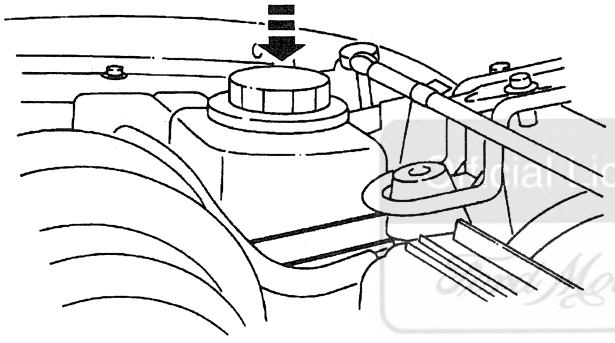 Q4194-B 2 	1 Install the pressure relief cap. 3 As the engine starts to heat up, feel the inlet and outlet heater water hoses. They should feel approximately the same after three or four minutes. • Is the heater water hose approximately the same temperature as the inlet heater water hose ? → **Yes** GO to **B5**. → **No** TURN the engine off. REPAIR or REPLACE heater core. REFER to Section 412-02. TEST the system for normal operation.

(Continued)

DIAGNOSIS AND TESTING (Continued)

PINPOINT TEST B: THE ENGINE OVERHEATS (Continued)

TEST CONDITIONS	TEST DETAILS/RESULTS/ACTIONS
B5 CHECK THE WATER THERMOSTAT OPERATION	
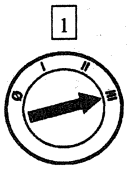	[1] Start the engine and allow the engine to run for ten minutes. [2] Feel the inlet and outlet heater water hoses and the underside of the upper radiator hose. • Are the upper radiator hose and the heater water hoses cold? → **Yes** REPLACE the water thermostat; REFER to Thermostat in this section. TEST the system for normal operation. → **No** GO to **B6**.
B6 CHECK THE COOLING FAN OPERATION	
	[1] Perform the cooling fan component tests; refer to the Component Tests in this section. • Is the cooling fan operation OK? → **Yes** GO to Section 303-01 for diagnosis and testing of the engine. → **No** REPLACE the fan component determined; REFER to Thermostat in this section. TEST the system for normal operation.

Official Licensed Product
Ford Motor Company

PINPOINT TEST C: THE ENGINE DOES NOT REACH NORMAL OPERATING TEMPERATURE

TEST CONDITIONS	TEST DETAILS/RESULTS/ACTIONS
C1 CHECK THE ENGINE TEMPERATURE	
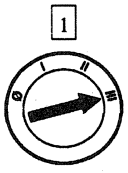	[1] Start the engine and allow the engine to idle for ten minutes.

(Continued)

DIAGNOSIS AND TESTING (Continued)

PINPOINT TEST C: THE ENGINE DOES NOT REACH NORMAL OPERATING TEMPERATURE (Continued)

TEST CONDITIONS	TEST DETAILS/RESULTS/ACTIONS
C1 CHECK THE ENGINE TEMPERATURE (Continued)	
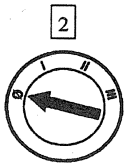	2 Feel the inlet and heater water hoses and the underside of the upper radiator hose. • Are the upper radiator hose and the heater water hoses cold? → **Yes** REPLACE the water thermostat; REFER to Thermostat in this section. TEST the system for normal operation. → **No** GO to Section 413-01 for diagnosis and testing of the engine coolant temperature gauge.

PINPOINT TEST D: THE BLOCK HEATER DOES NOT OPERATE PROPERLY

TEST CONDITIONS	TEST DETAILS/RESULTS/ACTIONS
D1 CHECK THE POWER CABLE	
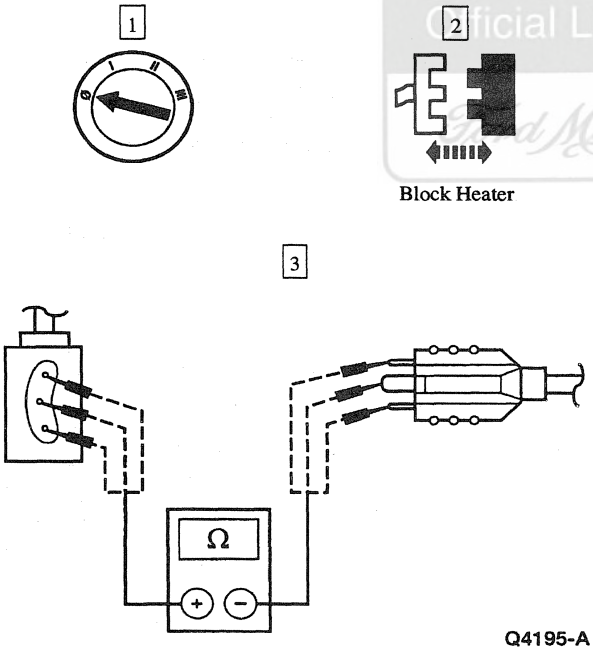	3 Check resistance in circuits 1, 2, and 3 of the block heater. • Is the resistance in circuits 1, 2, and 3 less than 5 ohms? → **Yes** REPLACE the block heater. → **No** REPLACE the power cable. TEST the system for normal operation.

Official Licensed Product Ford Motor Company

Component Tests

Pressure Test

1. Turn the engine OFF.

DIAGNOSIS AND TESTING (Continued)

2. **WARNING: NEVER REMOVE THE PRESSURE RELIEF CAP UNDER ANY CONDITIONS WHILE THE ENGINE IS OPERATING. FAILURE TO FOLLOW THESE INSTRUCTIONS COULD RESULT IN DAMAGE TO THE COOLING SYSTEM OR ENGINE AND/OR PERSONAL INJURY. TO AVOID HAVING SCALDING HOT COOLANT OR STEAM BLOW OUT OF THE COOLING SYSTEM, NEVER REMOVE THE PRESSURE RELIEF CAP FROM A HOT DEGAS BOTTLE. WAIT UNTIL THE ENGINE HAS COOLED, THEN WRAP A THICK CLOTH AROUND THE PRESSURE RELIEF CAP AND TURN IT SLOWLY ONE TURN (COUNTERCLOCKWISE). STEP BACK WHILE THE PRESSURE IS RELEASED FROM THE COOLING SYSTEM. WHEN CERTAIN ALL THE PRESSURE HAS BEEN RELEASED, REMOVE THE PRESSURE RELIEF CAP (STILL WITH A CLOTH).**

   Check the engine coolant level; refer to Cooling System Draining, Filling and Bleeding in this section.

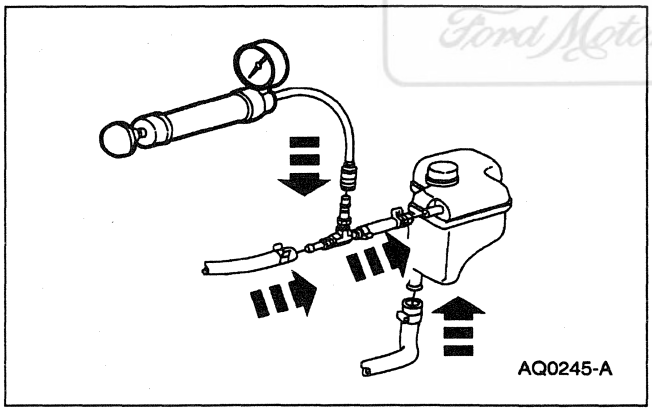

3. Connect Radiator Heater Core Pressure Tester to the degas bottle nipple and overflow hose. Install a pressure test pump to the quick-connect fitting of the test adapter.

4. **NOTE:** If the plunger of the pump is depressed too fast, an erroneous pressure reading will result.

   Slowly depress the plunger of the pressure test pump until the pressure gauge reading stops increasing and note the highest pressure reading obtained.

5. If the pressure relief cap does not hold pressure, remove and wash the pressure relief cap in clean water to dislodge all foreign particles from the gaskets. Check the sealing surface in the filler neck.

6. If 89 kPa (13 psi) cannot be reached, replace the pressure relief cap. If more than 12 kPa (18 psi) shows on gauge, replace the pressure relief cap.

7. **CAUTION: If the pressure drops, check for leaks at the engine to heater core hoses, engine-to-radiator hoses, water valve hose (if applicable), oil cooler return tube gasket (6N789), radiator and heater core or other system components and connections. Any leaks which are found must be corrected and the system rechecked.**

   Pressurize the engine cooling system as described in Step 4 (using a pressure relief cap that operates within the specified upper and lower pressure limits). Observe the gauge reading for approximately two minutes; refer to General Specifications. Pressure should not drop during this time.

8. Release the system pressure by loosening the pressure relief cap. Check the engine coolant level and replenish, if necessary, with the correct engine coolant mixture; refer to Cooling System Draining, Filling and Bleeding in this section.

Ford Licensed Product
Ford Motor Company

DIAGNOSIS AND TESTING (Continued)

Cap

WARNING: NEVER REMOVE THE PRESSURE RELIEF CAP UNDER ANY CONDITIONS WHILE THE ENGINE IS OPERATING. FAILURE TO FOLLOW THESE INSTRUCTIONS COULD RESULT IN DAMAGE TO THE COOLING SYSTEM OR ENGINE AND/OR PERSONAL INJURY. TO AVOID HAVING SCALDING HOT COOLANT OR STEAM BLOW OUT OF THE COOLING SYSTEM, USE EXTREME CARE WHEN REMOVING THE PRESSURE RELIEF CAP FROM A HOT DEGAS BOTTLE. WAIT UNTIL THE ENGINE HAS COOLED, THEN WRAP A THICK CLOTH AROUND THE PRESSURE RELIEF CAP AND TURN IT SLOWLY ONE TURN (COUNTERCLOCKWISE). STEP BACK WHILE THE PRESSURE IS RELEASED FROM THE COOLING SYSTEM. WHEN CERTAIN ALL THE PRESSURE HAS BEEN RELEASED, REMOVE PRESSURE RELIEF CAP (STILL WITH A CLOTH).

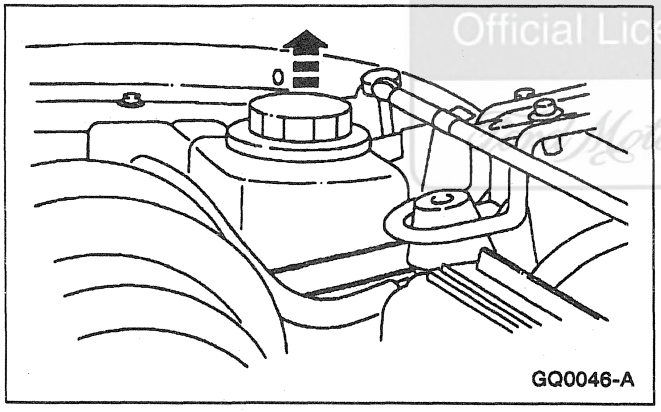
GQ0046-A

1. Remove the pressure relief cap from the degas bottle.
2. Immerse the pressure relief cap in water and install it on the shallow filler neck of Radiator/Heater Core Pressure Tester and Radiator Cap Adapter, part of Radiator/Heater Core Pressure Tester.
3. Immerse the filler neck seal in water and install it in the filler neck adapter.
4. Install the filler neck adapter with the filler neck seal to the Radiator Cap Adapter.
5. Connect the female quick-connect fitting of the pressure test pump to the male quick-connect fitting of the filler neck adapter.
6. **NOTE:** If the plunger of the pump is depressed too fast, an erroneous pressure reading will result.

   Slowly depress the plunger of the pressure test pump until the pressure gauge reading stops increasing and note the highest pressure reading obtained.
7. Release the pressure by turning the relief screw counterclockwise. Then tighten the pressure relief screw and repeat Step 6 (at least twice) to make sure the reading is repeatable within the specifications of the pressure relief cap.
8. If the pressure test gauge readings are not within specifications, replace the pressure relief cap. If the pressure test gauge readings are within specifications, perform the cooling system Pressure Test.

Thermostat—Water

The water thermostat should be replaced only after the following electrical and mechanical tests have been performed.

Thermostat—Electrical Test

CAUTION: Always vent the exhaust to the outside when performing this test.

NOTE: The electrical thermostat test is most accurate if performed indoors at less than 37.8°C (100°F) ambient air. This test may be performed with or without the hood open and with the engine warm or cold.

1. Check the engine coolant level. Fill as needed.
2. With the ignition OFF, remove the engine coolant temperature (ECT) sensor harness connector and attach ECT Sensor "T" Cable as a jumper between the powertrain control module and the ECT Sensor. Attach the 73 Digital Multimeter to the ECT Sensor "T" Cable. Voltage values (0-5 V) may now be monitored while the sensor retains its connection to the wiring harness.

   New Generation STAR (NGS) Tester or the Service Bay Diagnostic System (SBDS) may be used to monitor the ECT on vehicles equipped with data link connector (DLC). The SBDS sequence to use for the screen is: Toolbox-Electronic Engine Control and DCL-Item.

Official Licensed Product

DIAGNOSIS AND TESTING (Continued)

3. **NOTE:** Running this test with the vehicle in gear or with the A/C compressor clutch engaged (running) will cause improper diagnosis.

   Place the transmission in PARK (P) or NEUTRAL (N).

4. Start the engine and allow the engine to idle throughout this test. Allow the engine to run for 2 minutes, then record the ECT voltage. Record the ECT voltage every 60 seconds. When the ECT voltage trend changes direction or only changes slightly (0.03 voltage or less) from the previous reading, record this as the thermostat opening voltage. Use the voltage and corresponding coolant temperature chart listed below.

Coolant Temperature °C (°F)	ECT (Volts)
22 (71)	3.00
43 (109)	2.01
71 (159)	1.01
82 (180)	0.75
91 (195)	0.059
97 (206)	0.050
105 (221)	0.040

5. If the thermostat opening voltage is greater than 0.75 volts and less than 82°C (180°F), replace the water thermostat.
6. If the thermostat opening voltage is less than 0.75 volts and greater than 82°C (180°F), the water thermostat is good and should not be replaced. Refer to the Symptom Chart for further instructions.

Thermostat—Mechanical Test

1. Remove the water thermostat.
2. Check the water thermostat for seating. Hold the water thermostat up to a lighted background. Leakage of light around the thermostat valve at room temperature indicates that the water thermostat should be replaced. Some water thermostats have a small leakage notch at one location on the perimeter of the thermostat valve, which is considered normal.
3. Immerse the water thermostat in a boiling antifreeze and water mixture.
4. See the General Specifications chart for water thermostat opening temperatures.

Radiator Leak Test, Removed From the Vehicle

CAUTION: Never leak test an aluminum radiator in the same water that copper/brass radiators are tested in. Flux and caustic cleaners may be present in the cleaning tank and they will damage aluminum radiators.

NOTE: Always install plugs in the oil cooler fittings before leak-testing or cleaning any radiator.

NOTE: Clean the radiator before leak-testing to avoid contamination of tank.

1. Leak-test the radiator in clean water with 138 kPa (20 psi) air pressure.

Fan Clutch Test

1. Spin the fan blade (8600) by hand. A light resistance should be felt. If there is no resistance or very high resistance, the minimum and maximum fan speeds must be checked as follows:

Fan Clutch Test—Minimum Speed Requirement

1. Use a suitable marker to mark the water pump pulley (8509), one of the fan blade retaining bolts and the crankshaft pulley (6312).
2. Connect a tachometer to the engine.
3. Install a throttle adjusting tool.
4. Connect the Digital Photoelectric Tachometer.
5. **WARNING: TO AVOID THE POSSIBILITY OF PERSONAL INJURY OR DAMAGE TO THE VEHICLE, DO NOT OPERATE THE ENGINE UNTIL THE FAN BLADE HAS BEEN FIRST EXAMINED FOR POSSIBLE CRACKS AND SEPARATION.**

   Start the engine and run it at approximately 1500 rpm until the normal operating temperature has been achieved.
6. Adjust the engine speed to 2300 rpm.
7. Operate the strobe light at 3000 rpm and aim it at the water pump pulley. Adjust the engine speed until the light flash and the water pump pulley mark are synchronized.
8. Aim the strobe light at the fan blade bolts. Adjust the strobe light until the light flash is synchronized with the marked fan blade bolt (the fan blade appears to stand still).

Official Licensed Ford Motor Company

DIAGNOSIS AND TESTING (Continued)

9. The fan blade speed must not be greater than 1500 rpm at 3000 water pump rpm.
10. Turn the engine off.
11. If the fan blade speed was greater than 1500 rpm, replace the fan clutch (8A616).

Fan Clutch Test—Maximum Speed Requirement

1. Perform Steps 1 through 5 of the Fan Clutch Test—Minimum Speed Requirement.
2. **NOTE:** The temperature should be above 96°C (205°F) for maximum fan speed.

   Block off areas on each side of the radiator in the engine compartment and the front of the radiator grille (8200). This will raise the temperature of the air striking the fan clutch and should cause the fan blade to operate at maximum speed.
3. Place the climate control function selector switch in the MAX A/C position and the blower motor switch in the HI position.
4. Adjust the strobe to 3000 rpm.
5. **WARNING: TO AVOID THE POSSIBILITY OF PERSONAL INJURY OR DAMAGE TO THE VEHICLE, DO NOT OPERATE THE ENGINE UNTIL THE FAN BLADE HAS BEEN FIRST EXAMINED FOR POSSIBLE CRACKS AND SEPARATION.**

   Start the engine and adjust the engine speed until the strobe light flash and the water pump pulley mark are synchronized.
6. Aim the strobe light at the fan blade retaining bolts. Adjust the strobe light until the light flash is synchronized with the marked fan blade bolt (the fan blade appears to stand still).
7. If the fan blade speed is less than 2300 rpm, replace the fan clutch.

Cap—Pressure Relief

1. Inspect the pressure relief cap and seals for damage or deterioration. Replace the pressure relief cap if necessary.

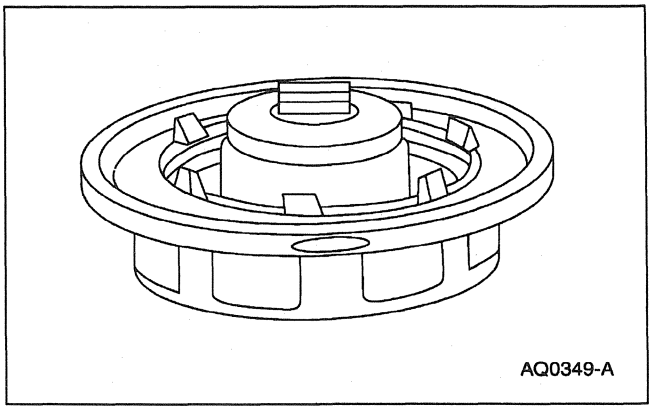

2. Fit pressure relief cap to Radiator/Heater Core Pressure Tester Kit using the aftermarket adapter.

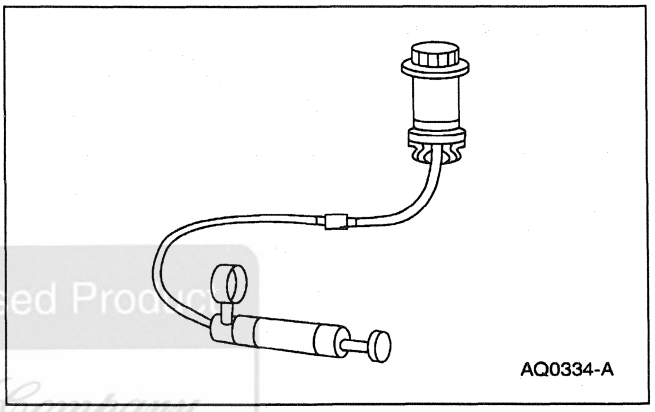

3. **NOTE:** If the plunger of the pressure tester is depressed too fast, an incorrect pressure reading will result.

   Slowly pump the pressure tester until the pressure gauge stops increasing and note the highest pressure reading. Release pressure and repeat test. Replace the pressure relief cap if the pressure is not 99.3-121.4 kPa (14.4-17.6 psi).

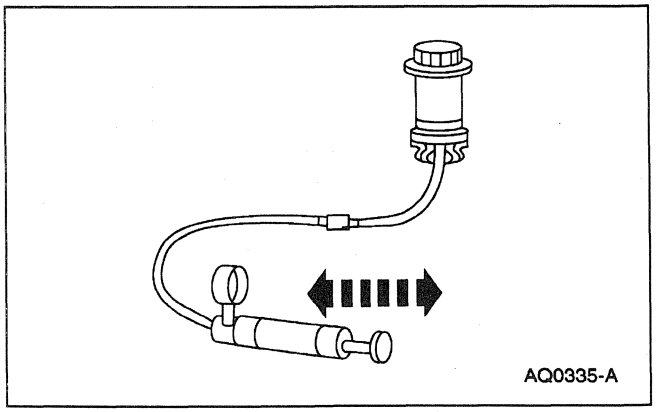

Ford Motor Company Proprietary Licensed Product

REMOVAL AND INSTALLATION

Thermostat

Removal

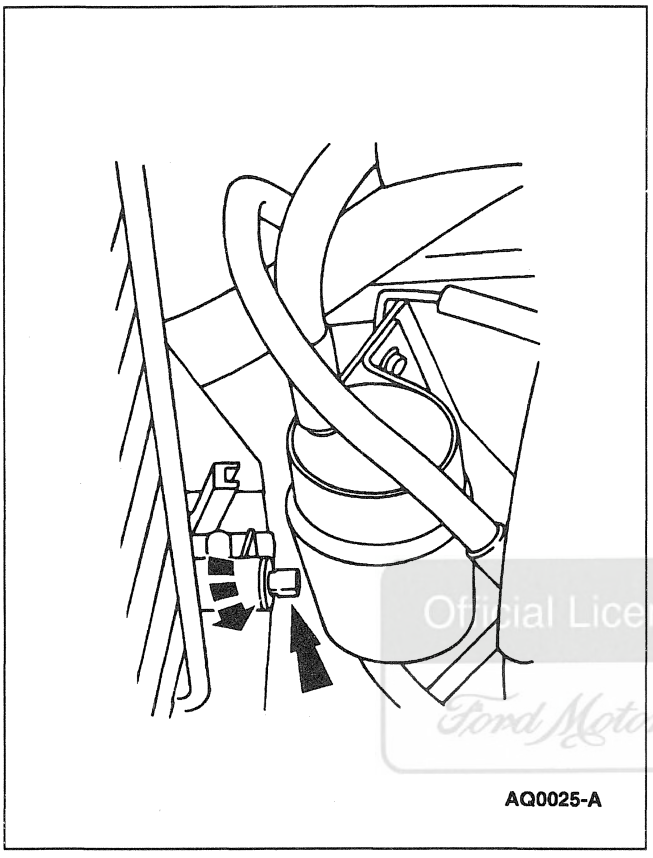

1. **WARNING: NEVER REMOVE THE PRESSURE RELIEF CAP UNDER ANY CONDITIONS WHILE THE ENGINE IS OPERATING. FAILURE TO FOLLOW THESE INSTRUCTIONS COULD RESULT IN DAMAGE TO THE COOLING SYSTEM OR ENGINE AND/OR PERSONAL INJURY. TO AVOID HAVING SCALDING HOT COOLANT OR STEAM BLOW OUT OF THE COOLING SYSTEM OR DEGAS BOTTLE, USE EXTREME CARE WHEN REMOVING THE PRESSURE RELIEF CAP FROM A HOT COOLING SYSTEM OR DEGAS BOTTLE. WAIT UNTIL THE ENGINE HAS COOLED, THEN WRAP A THICK CLOTH AROUND THE PRESSURE RELIEF CAP AND TURN IT SLOWLY UNTIL PRESSURE BEGINS TO RELEASE. STEP BACK WHILE THE PRESSURE IS RELEASED FROM THE COOLING SYSTEM. WHEN CERTAIN ALL PRESSURE HAS BEEN RELEASED, REMOVE THE PRESSURE CAP (STILL WITH A CLOTH).**

   Drain the engine cooling system so the engine coolant level is below the water thermostat (8575).

Official Licensed Ford Motor Company

REMOVAL AND INSTALLATION (Continued)

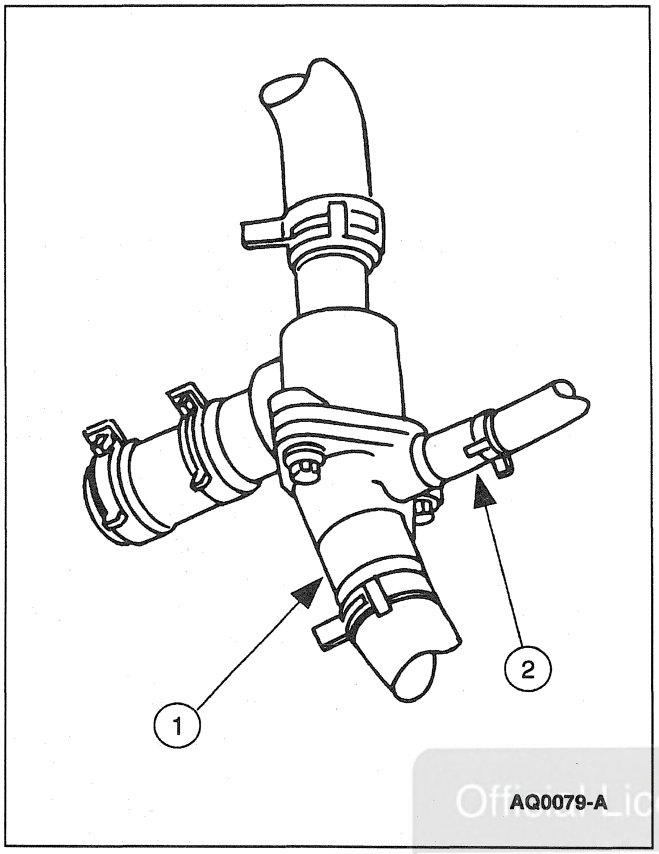

2. Remove the hoses from the water inlet connector.
   1 Disconnect the lower radiator hose (8286).
   2 Disconnect the hold-down clamp (12270).

Official Licensed Product
Ford Motor Company

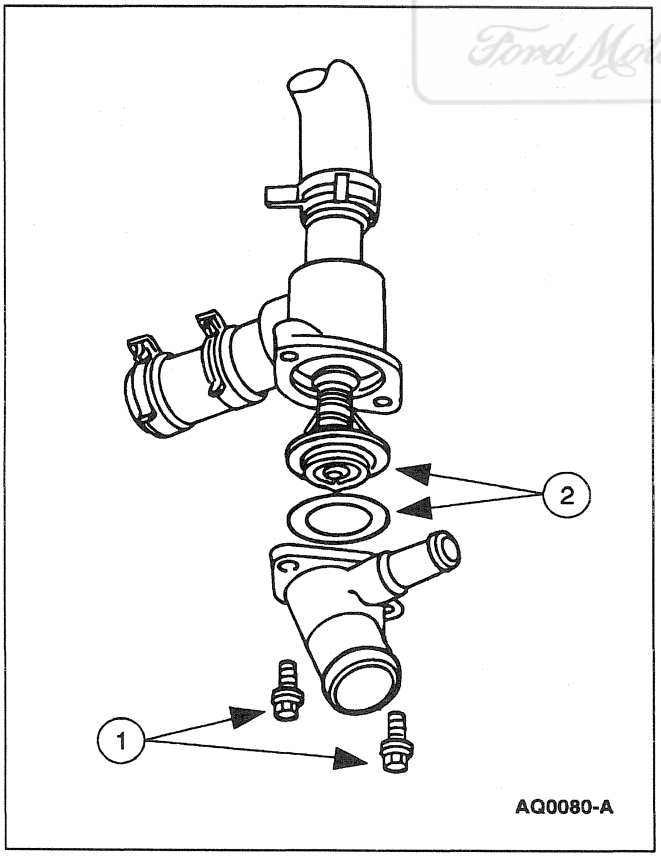

3. Remove the water thermostat.
   1 Remove the bolts.
   2 Remove the water thermostat and O-ring.

REMOVAL AND INSTALLATION (Continued)

4. Inspect the O-ring for damage and replace it if necessary.

Installation

1. Follow the removal procedure in reverse order.
2. Fill the cooling system; refer to Cooling System Draining, Filling and Bleeding in this section.

Housing, Thermostat

Removal

1. Remove the water thermostat (8575); refer to Thermostat in this section.
2. Remove the water hose connection (8592).
   1 Remove the water bypass hose (8597).
   2 Remove the engine coolant hose.
   3 Remove the water inlet connection.

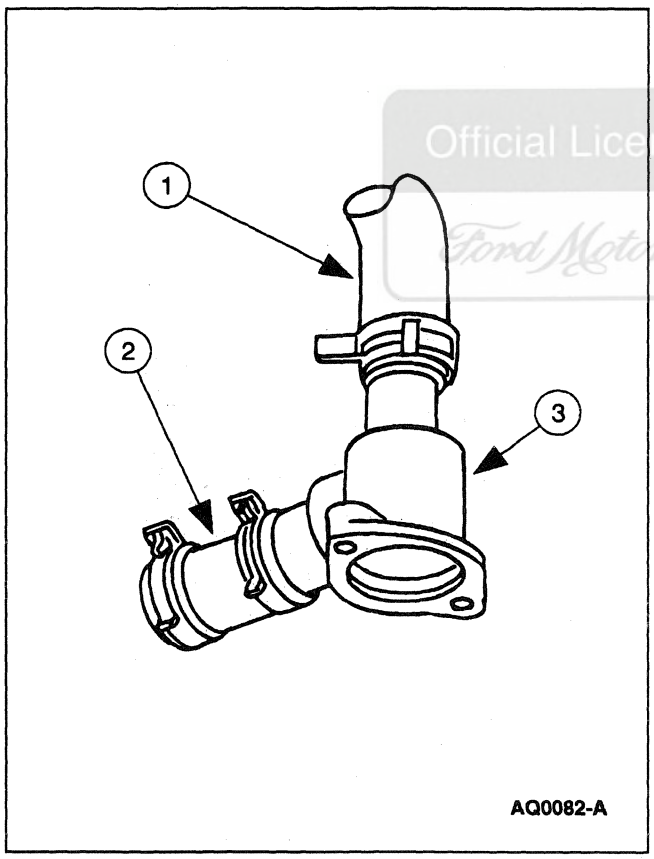

Official Licensed Product
Ford Motor Company

Installation

1. Follow removal procedure in reverse order.

REMOVAL AND INSTALLATION (Continued)

Bypass Tube

Removal

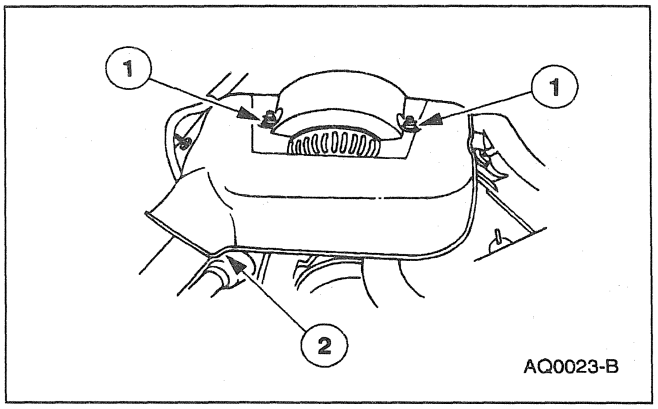

1. Remove the generator cover.
   1 Remove the nuts.
   2 Lift and remove the generator cover.

2. Disconnect the battery ground cable (14301).

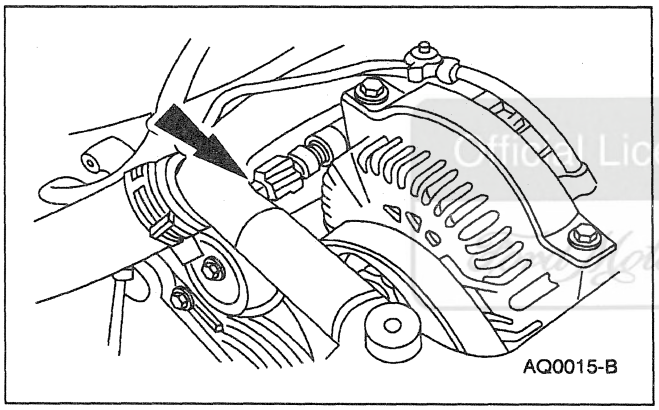

3. Disconnect the engine control sensor wiring (12A581) from the engine coolant temperature sensor (ECT sensor)(12A648).

Official Licensed Product
Motor Company

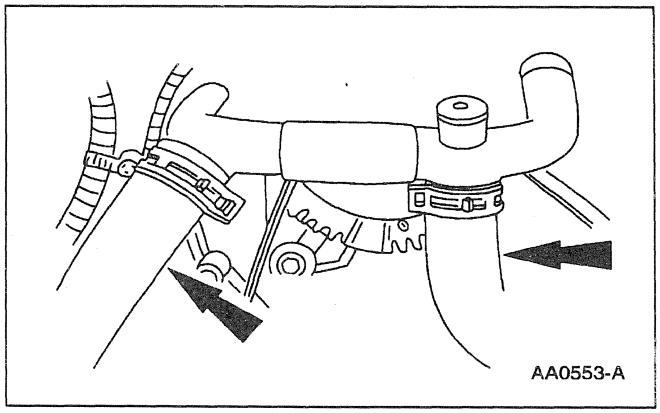

4. Remove the hoses from the water bypass tube (8548).

REMOVAL AND INSTALLATION (Continued)

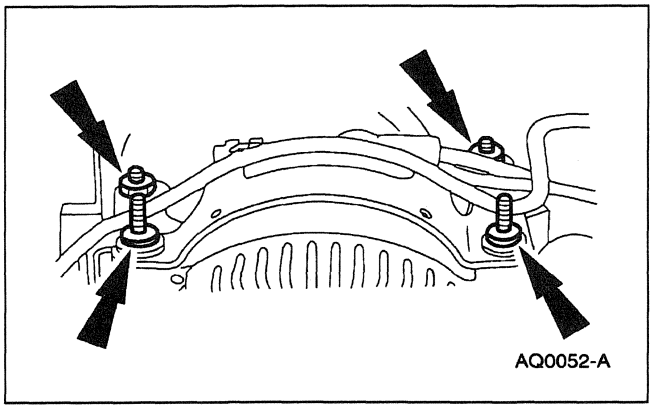

5. Remove the nuts and bolts and remove the generator mounting bracket (10153).

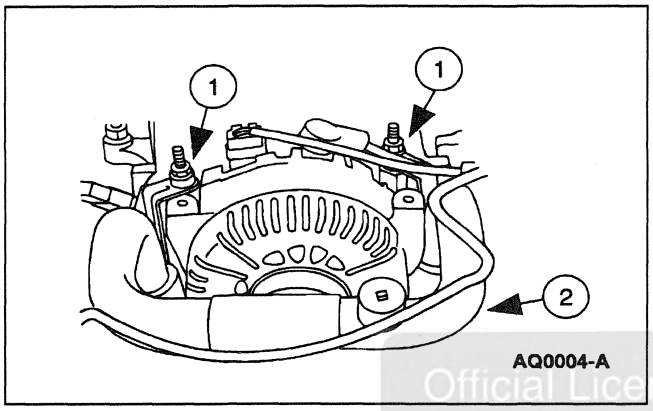

6. Remove the water bypass tube.
   1 Remove the nuts.
   2 Lift and remove the water bypass tube.

Official Licensed Product
Ford Motor Company

Installation

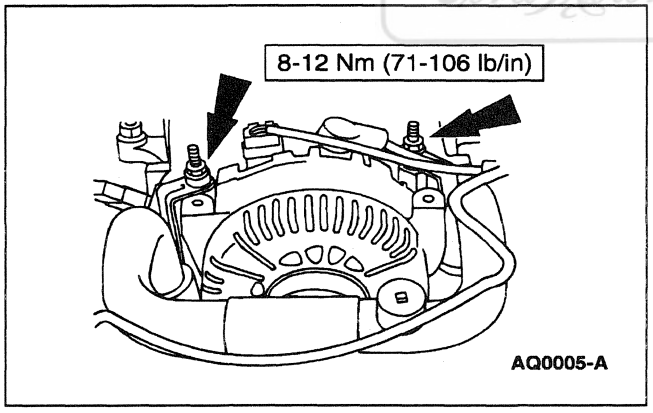

1. Follow the removal procedure in reverse order.

REMOVAL AND INSTALLATION (Continued)

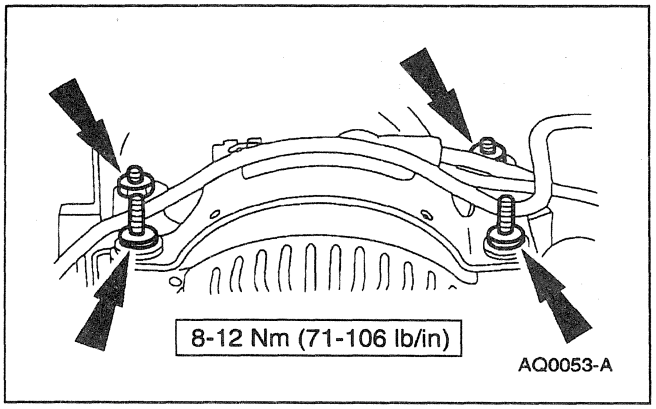

Water Pump

Refer to Section 303-01.

Radiator

Removal

Official Licensed Reader
Ford Motor Company

1. Remove the fan motor (8C607); refer to Fan—Motor, Fan Blade and Shroud in this section.
2. Remove the radiator upper sight shield (8C291).

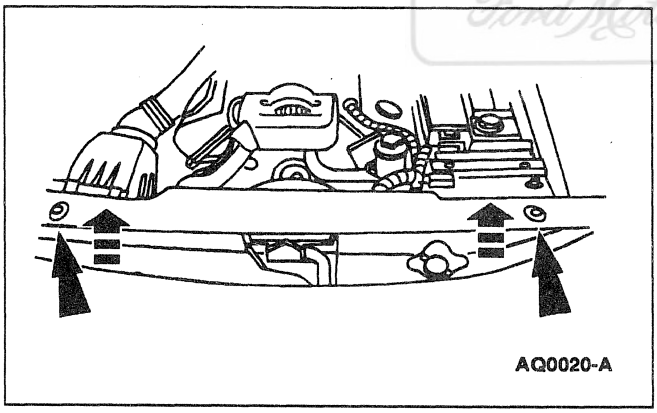

REMOVAL AND INSTALLATION (Continued)

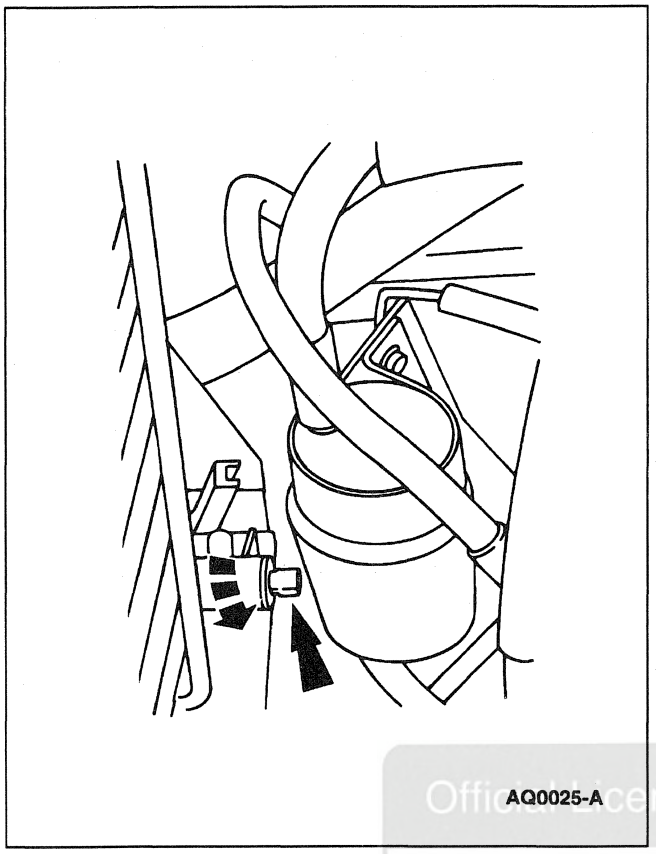

AQ0025-A

3. **WARNING: NEVER REMOVE THE PRESSURE RELIEF CAP UNDER ANY CONDITIONS WHILE THE ENGINE IS OPERATING. FAILURE TO FOLLOW THESE INSTRUCTIONS COULD RESULT IN DAMAGE TO THE COOLING SYSTEM OR ENGINE AND/OR PERSONAL INJURY. TO AVOID HAVING SCALDING HOT COOLANT OR STEAM BLOW OUT OF THE COOLING SYSTEM OR DEGAS BOTTLE, USE EXTREME CARE WHEN REMOVING THE PRESSURE RELIEF CAP FROM A HOT COOLING SYSTEM OR DEGAS BOTTLE. WAIT UNTIL THE ENGINE HAS COOLED, THEN WRAP A THICK CLOTH AROUND THE PRESSURE RELIEF CAP AND TURN IT SLOWLY UNTIL PRESSURE BEGINS TO RELEASE. STEP BACK WHILE THE PRESSURE IS RELEASED FROM THE COOLING SYSTEM. WHEN CERTAIN ALL PRESSURE HAS BEEN RELEASED, REMOVE THE PRESSURE CAP (STILL WITH A CLOTH).**

   Drain the engine cooling system.

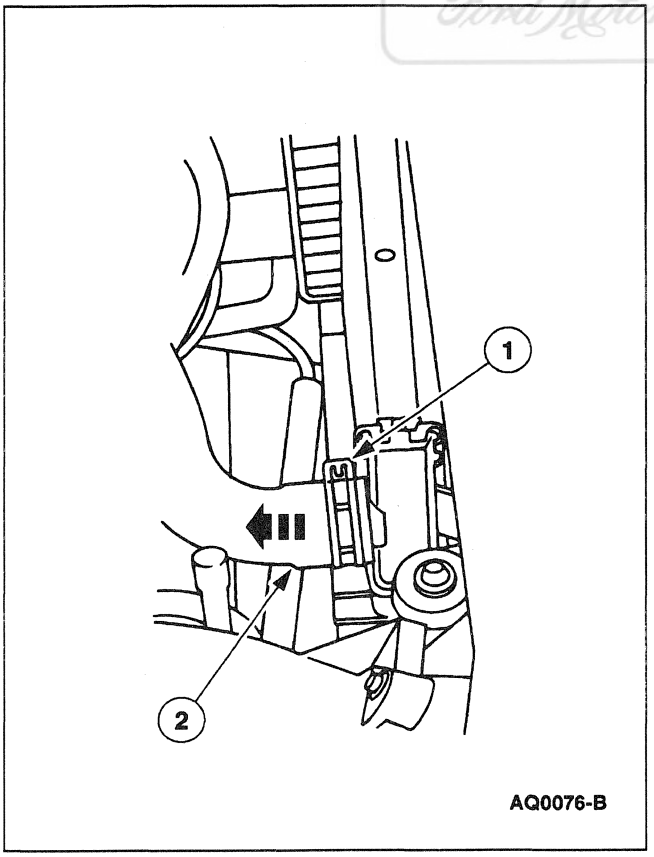

AQ0076-B

4. Disconnect the upper radiator hose (8260).
   1 Compress and move the hose clamp.
   2 Slide the hose off the radiator outlet.

Official Licensed Ford Motor Company

REMOVAL AND INSTALLATION (Continued)

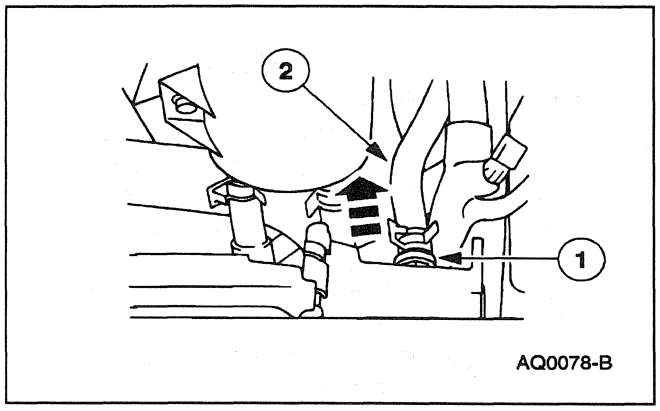

5. Disconnect the radiator overflow hose (8075).
   1 Compress and move the hose clamp.
   2 Slide the hose off the radiator outlet.

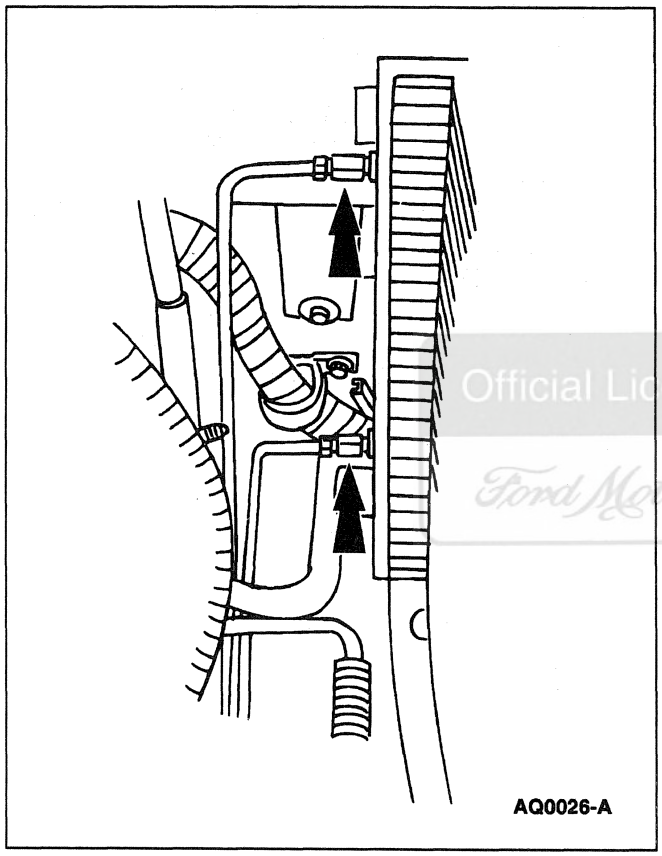

6. **NOTE:** Loosen the transmission fluid cooler lines while holding the radiator connector with another wrench.

   Disconnect the transmission fluid cooler inlet and outlet lines.

Official Licensed Product
Ford Motor Company

REMOVAL AND INSTALLATION (Continued)

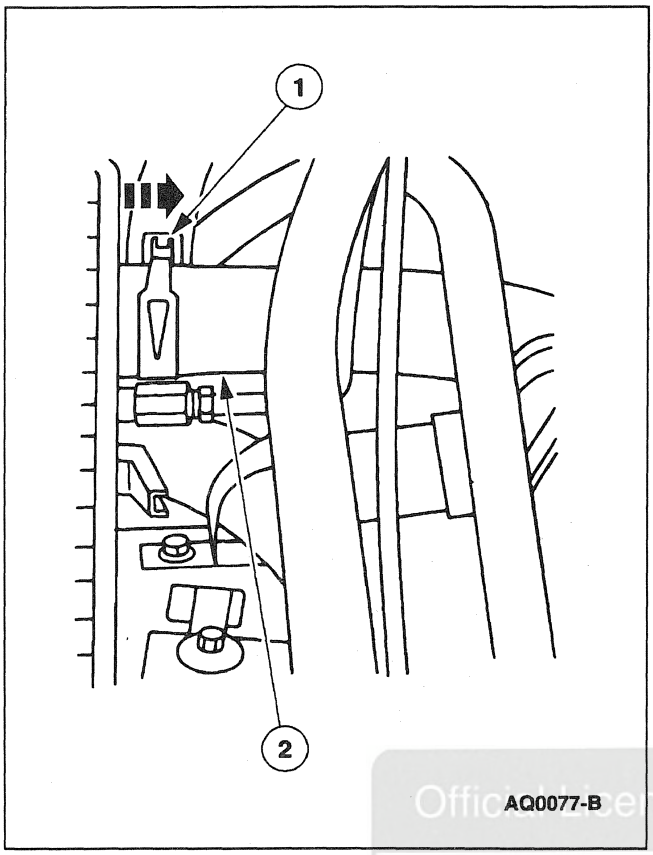

7. Disconnect the lower radiator hose (8286).
   1 Compress and move the hose clamp.
   2 Slide the hose off the radiator outlet.

Official Licensed Product
Ford Motor Company

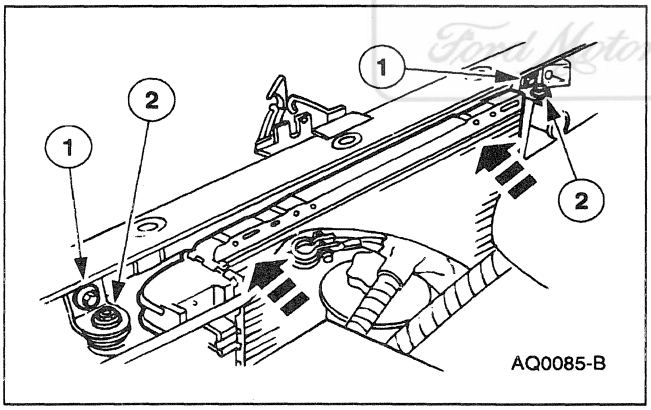

8. Remove the radiator (8005).
   1 Remove the bolts.
   2 Remove the radiator retaining brackets.
   3 Lift and remove the radiator.

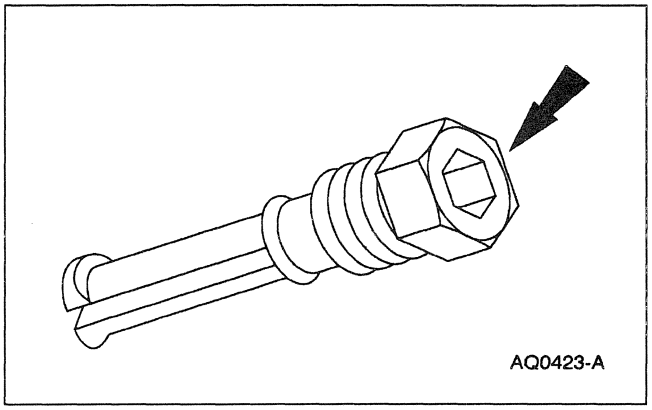

9. **NOTE:** Top oil tube connector (7D273) is shown, the bottom oil tube connector is similar.

   If installing a new radiator, remove the two oil tube connectors.

REMOVAL AND INSTALLATION (Continued)

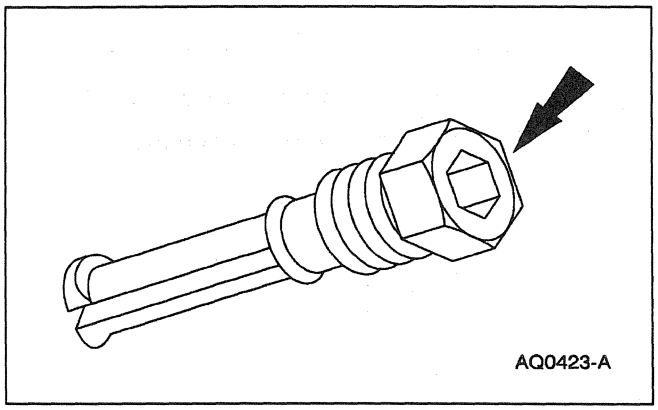

10. Remove and replace the O-ring on the radiator draincock (8115).

Installation

1. Follow the removal procedure in reverse order.

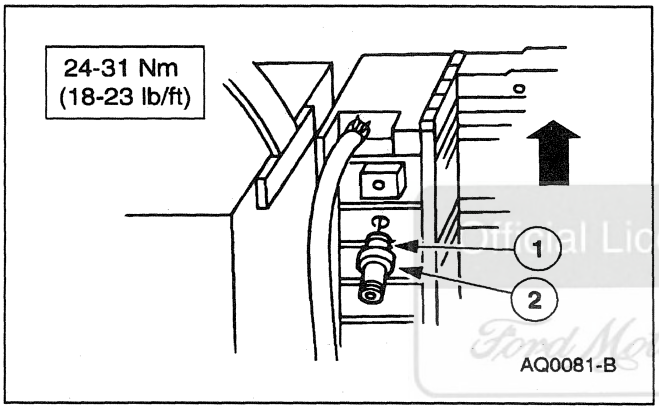

2. Note if the oil tube connectors are removed.
   1 Use Pipe Sealant with Teflon® D8AZ-19554-A or an equivalent oil-resistant sealer meeting the Ford specifications WSK-M2G350-A2 and ESR-M18P7-A.
   2 Install the two oil tube connectors.

Ford Motor Company

REMOVAL AND INSTALLATION (Continued)

Fan — Motor, Fan Blade and Shroud

Removal

⚠ WARNING: TO AVOID THE POSSIBILITY OF PERSONAL INJURY OR DAMAGE TO THE VEHICLE, DO NOT OPERATE THE ENGINE WITH THE HOOD OPEN UNTIL THE FAN BLADE HAS BEEN FIRST EXAMINED FOR POSSIBLE CRACKS AND SEPARATION.

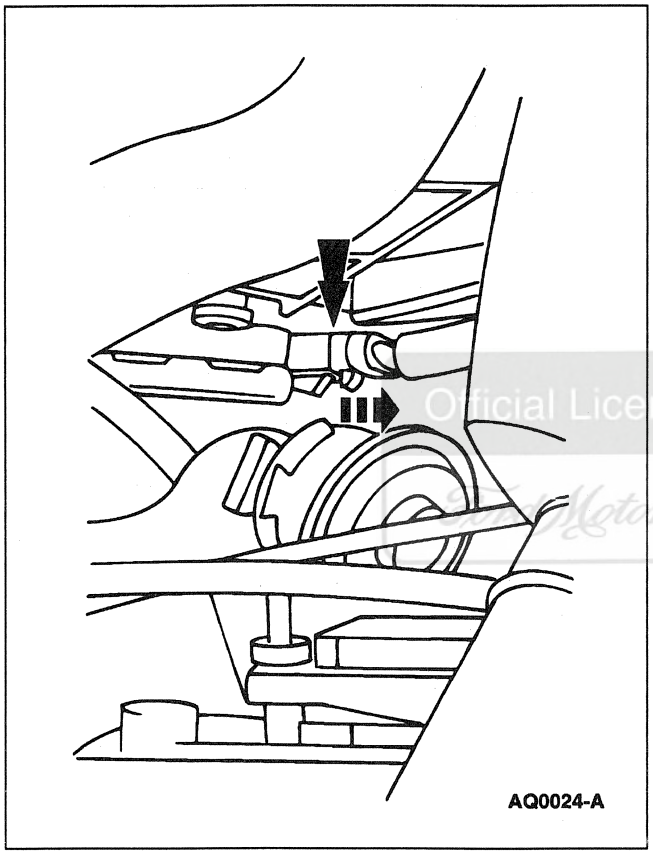

1. Disconnect the connector.

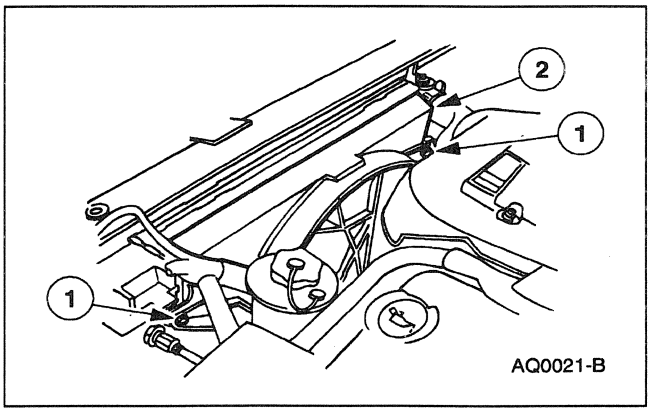

2. Remove the fan motor, fan and shroud.
   1 Remove the bolts.
   2 Remove the fan motor, fan and shroud from the radiator (8005).

Official Licensed Product Ford Motor Company

REMOVAL AND INSTALLATION (Continued)

Installation

1. Follow the removal procedure in reverse order.

Hose — Radiator

Removal

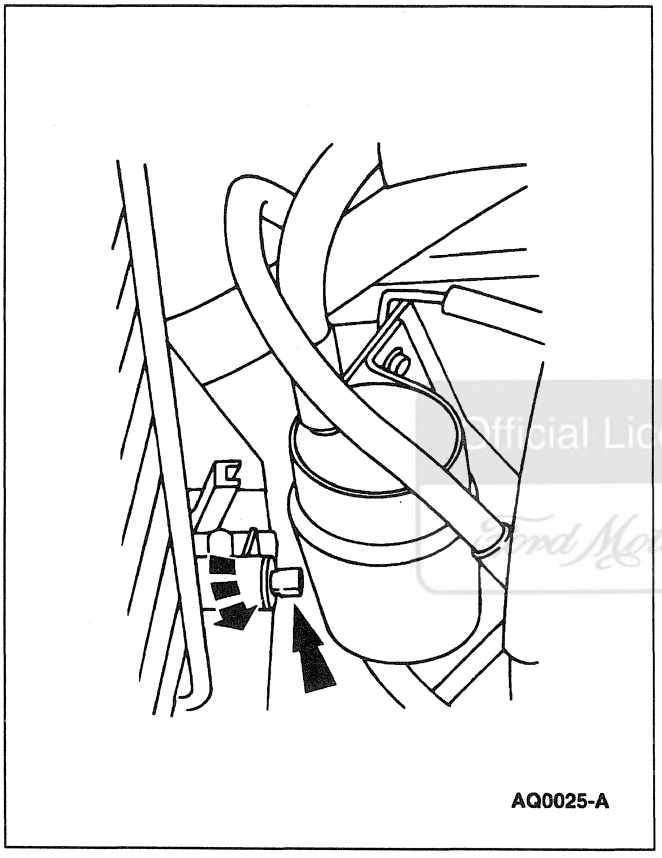

1. **WARNING: NEVER REMOVE THE PRESSURE RELIEF CAP UNDER ANY CONDITIONS WHILE THE ENGINE IS OPERATING. FAILURE TO FOLLOW THESE INSTRUCTIONS COULD RESULT IN DAMAGE TO THE COOLING SYSTEM OR ENGINE AND/OR PERSONAL INJURY. TO AVOID HAVING SCALDING HOT COOLANT OR STEAM BLOW OUT OF THE COOLING SYSTEM OR DEGAS BOTTLE, USE EXTREME CARE WHEN REMOVING THE PRESSURE RELIEF CAP FROM A HOT COOLING SYSTEM OR DEGAS BOTTLE. WAIT UNTIL THE ENGINE HAS COOLED, THEN WRAP A THICK CLOTH AROUND THE PRESSURE RELIEF CAP AND TURN IT SLOWLY UNTIL PRESSURE BEGINS TO RELEASE. STEP BACK WHILE THE PRESSURE IS RELEASED FROM THE COOLING SYSTEM. WHEN CERTAIN ALL PRESSURE HAS BEEN RELEASED, REMOVE THE PRESSURE CAP (STILL WITH A CLOTH).**

   Drain the engine cooling system.

Official Licensed Ford Motor Company

REMOVAL AND INSTALLATION (Continued)

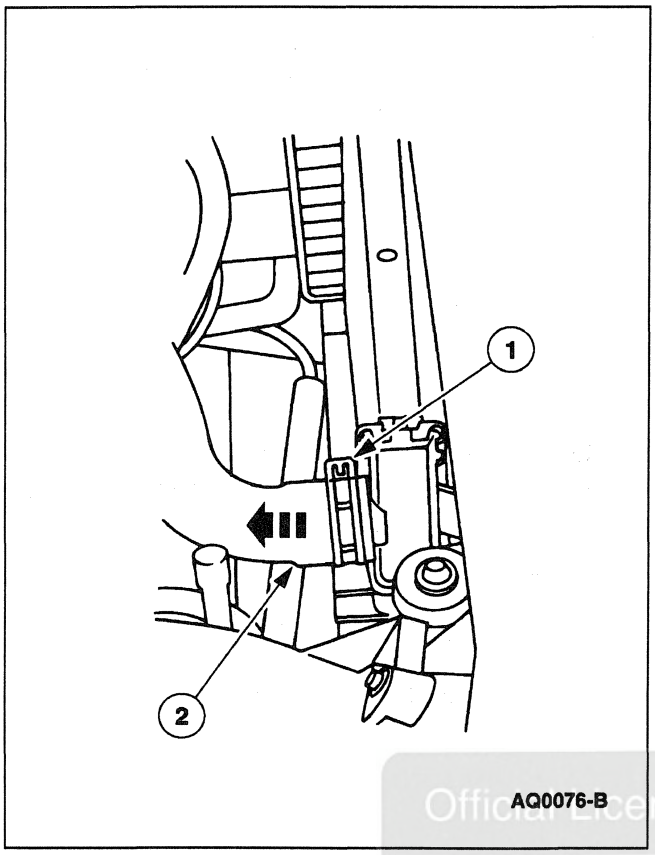

2. Radiator hoses should be checked as directed in the applicable maintenance schedule. Replace them whenever they become cracked, rotted or have a tendency to collapse.
   1 Release the upper clamp and position it away from the radiator.
   2 Disconnect the upper radiator hose (8260) from the radiator (8005).

Official Licensed Product
Ford Motor Company

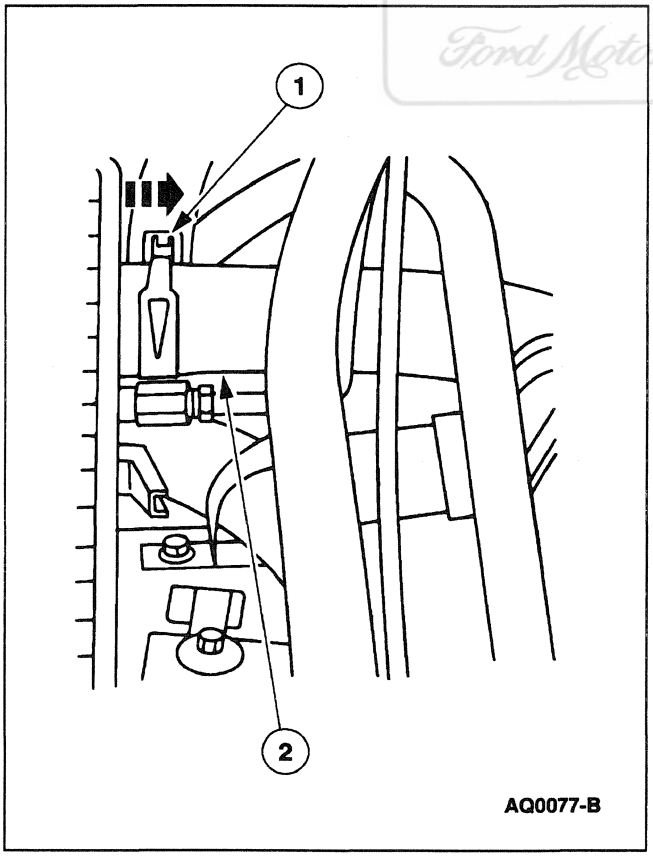

3. Disconnect the lower radiator hose (8286) from the radiator.
   1 Loosen clamp.
   2 Remove lower radiator hose.

REMOVAL AND INSTALLATION (Continued)

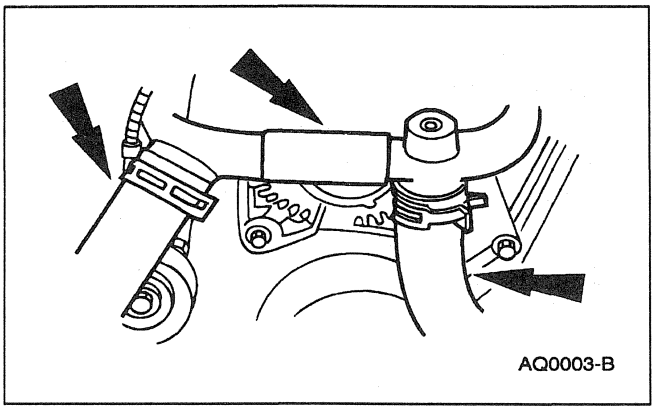

4. Remove the upper radiator hose and the water bypass hose (8597) from the water bypass tube (8548).

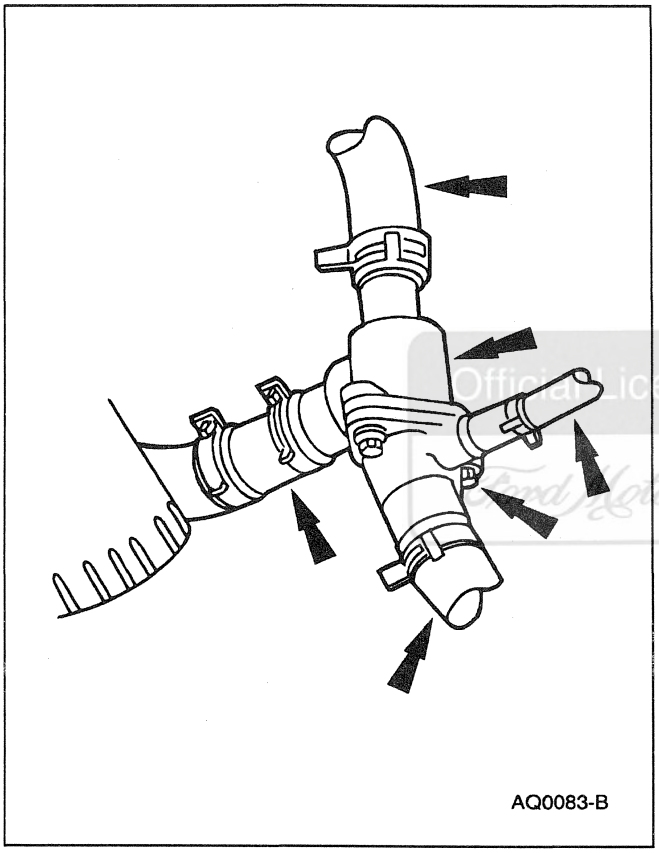

5. Remove the four hoses from the water inlet connection and the water hose connection (8592).
   - Remove the water bypass hose.
   - Remove the heater hose.
   - Remove the engine coolant hose from both ends.
   - Remove the lower radiator hose.

Official Licensed Product
Ford Motor Company

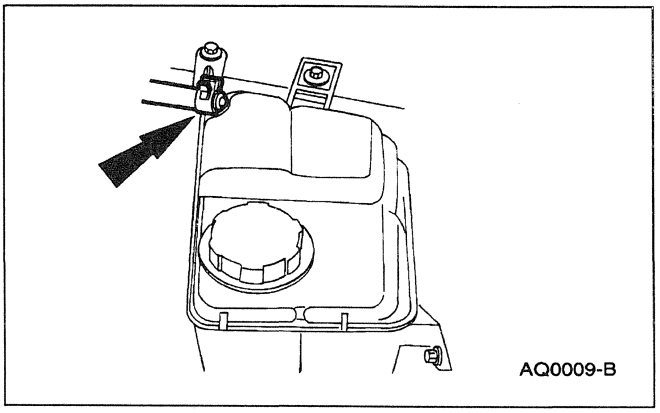

6. Remove the radiator overflow hose (8075).

REMOVAL AND INSTALLATION (Continued)

Installation

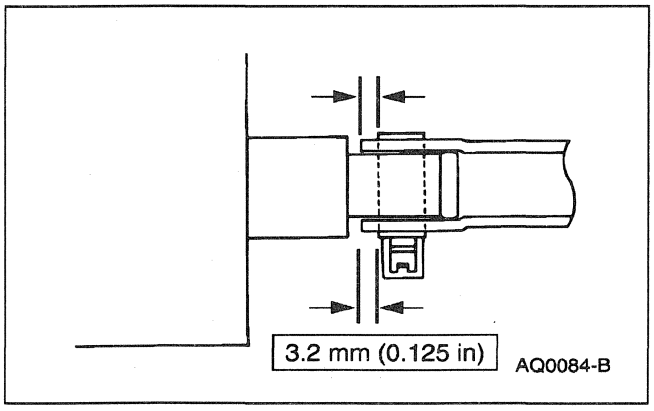

1. **CAUTION: Make sure the clamps are beyond the bead and placed in the center of the clamping surface of the connections or potential damage to the vehicle may occur.**
   Follow removal procedure in reverse order.

2. Fill the radiator; refer to Cooling System Draining, Filling and Bleeding in this section.

Motor, Fan

Removal

Official Licensed Product
Ford Motor Company

1. Remove the fan motor (8C607) assembly; refer to Fan—Motor, Fan Blade and Shroud in this section.

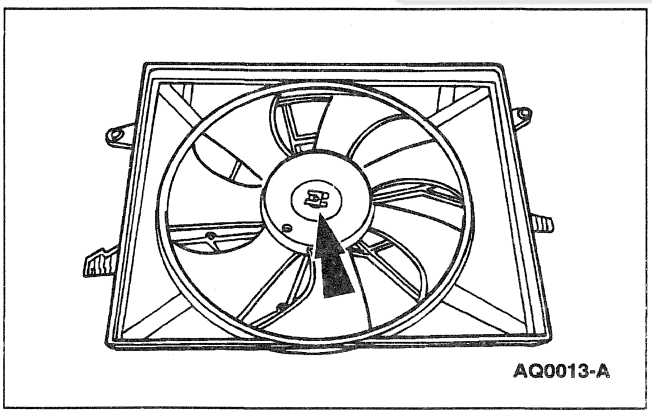

2. Remove the clip.

REMOVAL AND INSTALLATION (Continued)

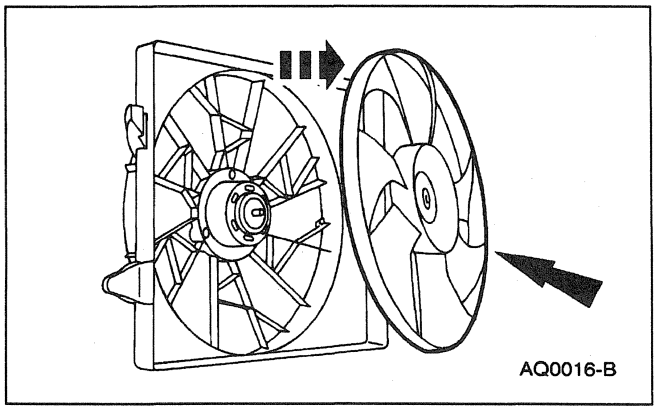

3. Separate the fan blade (8600) from the fan shroud (8146).

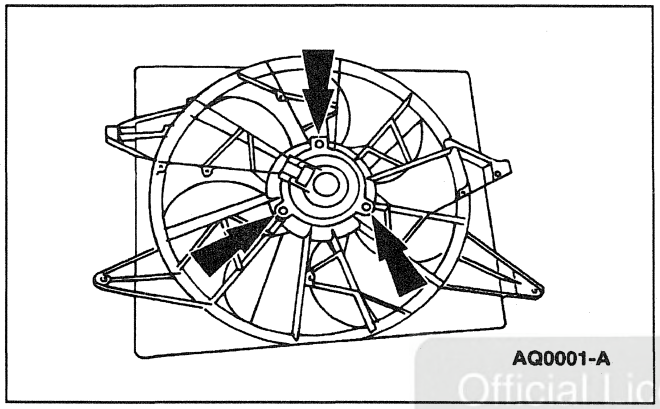

4. Remove the rivets and the fan motor.

Official Licensed Product
Ford Motor Company

Installation

1. Follow the removal procedure in reverse order.

REMOVAL AND INSTALLATION (Continued)

Degas Bottle

Removal

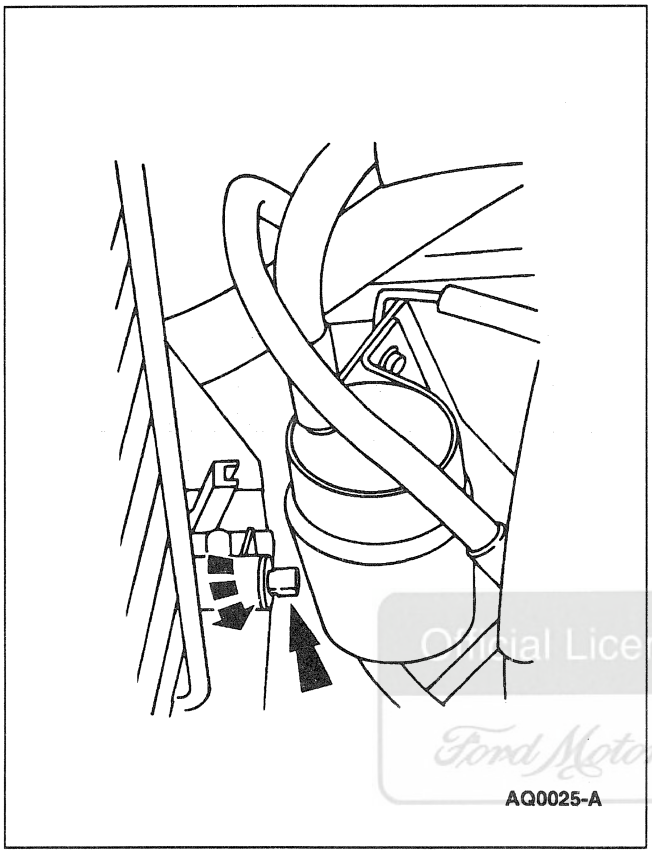
AQ0025-A

1. ⚠ **WARNING: NEVER REMOVE THE PRESSURE RELIEF CAP UNDER ANY CONDITIONS WHILE THE ENGINE IS OPERATING. FAILURE TO FOLLOW THESE INSTRUCTIONS COULD RESULT IN DAMAGE TO THE COOLING SYSTEM OR ENGINE AND/OR PERSONAL INJURY. TO AVOID HAVING SCALDING HOT COOLANT OR STEAM BLOW OUT OF THE COOLING SYSTEM OR DEGAS BOTTLE, USE EXTREME CARE WHEN REMOVING THE PRESSURE RELIEF CAP FROM A HOT COOLING SYSTEM OR DEGAS BOTTLE. WAIT UNTIL THE ENGINE HAS COOLED, THEN WRAP A THICK CLOTH AROUND THE PRESSURE RELIEF CAP AND TURN IT SLOWLY UNTIL PRESSURE BEGINS TO RELEASE. STEP BACK WHILE THE PRESSURE IS RELEASED FROM THE COOLING SYSTEM. WHEN CERTAIN ALL PRESSURE HAS BEEN RELEASED, REMOVE THE PRESSURE CAP (STILL WITH A CLOTH).**

   Drain the engine cooling system.

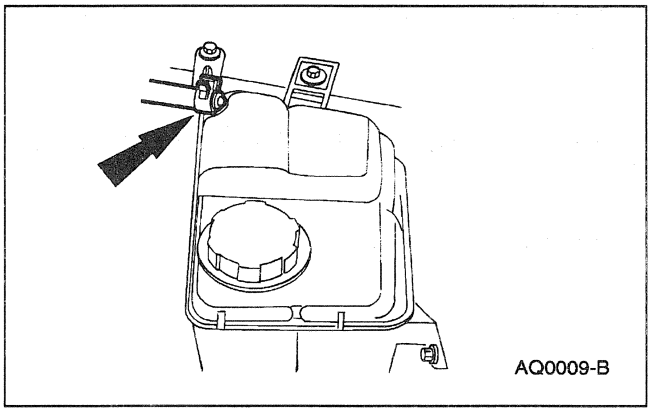
AQ0009-B

2. Remove the radiator overflow hose (8075).

REMOVAL AND INSTALLATION (Continued)

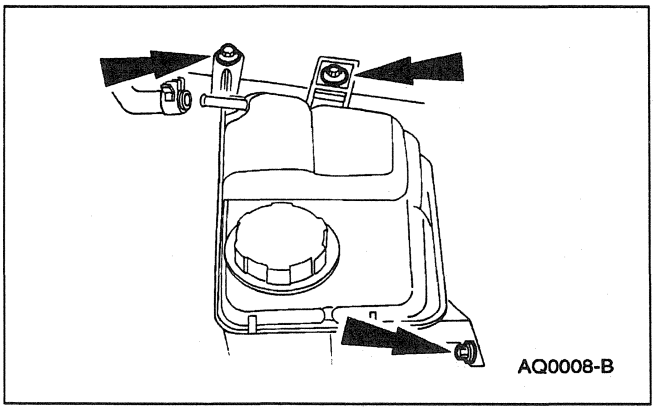

3. Remove the bolts and lift the degas bottle.

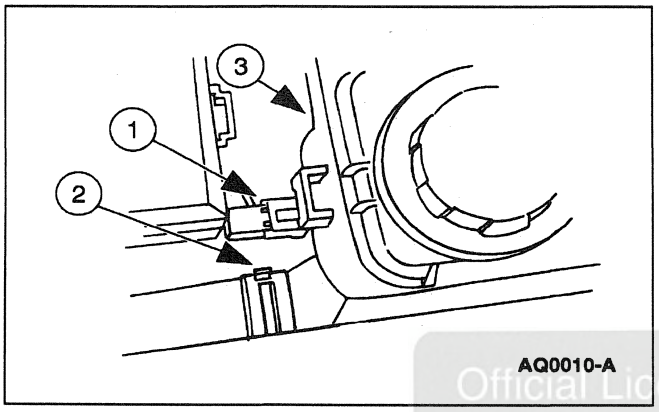

4. Remove the degas bottle.
   1 Remove the connector.
   2 Remove the degas bottle supply hose.
   3 Lift and remove the degas bottle from the vehicle.

Official Licensed Product
Ford Motor Company

Installation

1. Follow the removal procedure in reverse order.
2. Fill the radiator (8005); refer to Cooling System Draining, Filling and Bleeding in this section.

Sensor — Engine Coolant Temperature (ECT)

Removal and Installation

Refer to Section 303-14.

GENERAL PROCEDURES

Cooling System Inspection

Special Tool(s)

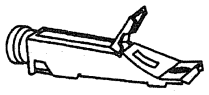 ST1720-A	Battery/Anti-Freeze Tester 014-R1060 or equivalent

1. ⚠ **WARNING: NEVER REMOVE THE PRESSURE RELIEF CAP WHILE THE ENGINE IS OPERATING OR WHEN THE COOLING SYSTEM IS HOT. FAILURE TO FOLLOW THESE INSTRUCTIONS CAN RESULT IN DAMAGE TO THE COOLING SYSTEM OR ENGINE OR PERSONAL INJURY. TO AVOID HAVING SCALDING HOT COOLANT OR STEAM BLOW OUT OF THE DEGAS BOTTLE WHEN REMOVING THE PRESSURE RELIEF CAP, WAIT UNTIL THE ENGINE HAS COOLED, THEN WRAP A THICK CLOTH AROUND THE PRESSURE RELIEF CAP AND TURN IT SLOWLY. STEP BACK WHILE THE PRESSURE IS RELEASED FROM THE COOLING SYSTEM. WHEN YOU ARE SURE ALL THE PRESSURE HAS BEEN RELEASED, (STILL WITH A CLOTH) TURN AND REMOVE THE PRESSURE RELIEF CAP.**

   ⚠ **CAUTION: If there is engine coolant in the engine oil the cause must be corrected and the oil changed or engine damage may occur.**

   ⚠ **CAUTION: If there is coolant in the transmission fluid, the cause must be corrected or transmission damage may occur.**

   NOTE: Check the engine coolant in the degas bottle and radiator (8005), if vehicle has not been allowed to reach normal operating temperature. This will make sure sufficient engine coolant exchange has occurred.

   Once pressure is released, remove the pressure relief cap.

   Allow the engine to cool and remove the pressure relief cap.

Official Licensed Product
Ford Motor Company

GENERAL PROCEDURES (Continued)

2. Inspect the coolant in both the radiator and the degas bottle for coolant color:
   - Clear, light green or blue indicates higher water content than required.
   - Dark brown indicates unauthorized stop leak may have been used. Use cooling system Stop Leak Powder E6AZ-19558-A or equivalent meeting Ford specification ESE-M99B170-A only.
   - A light or reddish-brown color indicates rust in the cooling system. Flush the system and refill with the correct mixture of water and Premium Cooling System Fluid, E2FZ-19549-AA or equivalent meeting Ford specification ESE-M97B44-A.
   - An iridescent sheen on top of the coolant indicates a trace of oil is entering the cooling system.
   - A milky-brown color indicates that oil is entering the cooling system.
   - A reddish milky appearance indicates transmission fluid is entering the system.
   - The causes of the leak might be:
     - A blown head gasket (6051).
     - A cracked or warped cylinder head (6049).
     - A crack in the engine oil gallery and the cooling passageways.
   - The causes of the leak might be:
     - A leaking radiator.
     - A leaking auxiliary fluid cooler.
   - If engine coolant is present in the engine oil, the cause of the leak might be:
     - A blown head gasket.
     - A cracked or warped cylinder head.
     - A crack in the engine oil gallery and cooling passageways.
   - If engine coolant is present in the transmission fluid, the cause might be:
     - A leaking radiator.
     - A leaking auxiliary fluid cooler.

Official Licensed Product
Ford Motor Company

GENERAL PROCEDURES (Continued)

3. If the engine coolant appearance is good, test the engine coolant range with the battery and antifreeze tester:
   - maximum range is 60/40.
   - minimum range is 45/55.

4. Check the engine coolant system conditions:
   - If the engine cooling fluid is low, add specified coolant mixture only.
   - If the engine coolant fluid tests weak, add straight engine coolant until the readings are within acceptable levels.
   - If the engine coolant tests strong, remove some of the engine coolant and add water until readings are within acceptable levels.

Cooling System Hoses and Clamps

1. Inspect the hoses for:
   - Visual signs of cracking or checking.
   - Swelling near the clamps and the hose ends.
   - Deterioration due to oil or oily dirt from the engine leaks.
   - Cuts that are not superficial.
   - Relocate the hoses and the clamps if in contact with objects.

Official Licensed Product
Ford Motor Company

Fan Blade

WARNING: DO NOT ATTEMPT TO STRAIGHTEN OR REPAIR THE FAN, REPLACE THE FAN IF DAMAGED.

1. Inspect the fan for:
   - Cracking.
   - Damage.

GENERAL PROCEDURES (Continued)

Cooling System Draining, Filling and Bleeding

Draining

⚠ WARNING: NEVER REMOVE THE PRESSURE RELIEF CAP WHILE THE ENGINE IS OPERATING OR WHEN THE COOLING SYSTEM IS HOT. FAILURE TO FOLLOW THESE INSTRUCTIONS CAN RESULT IN DAMAGE TO THE COOLING SYSTEM OR ENGINE OR PERSONAL INJURY. TO AVOID HAVING SCALDING HOT COOLANT OR STEAM BLOW OUT OF THE DEGAS BOTTLE WHEN REMOVING THE PRESSURE RELIEF CAP, WAIT UNTIL THE ENGINE HAS COOLED, THEN WRAP A THICK CLOTH AROUND THE PRESSURE RELIEF CAP AND TURN IT SLOWLY. STEP BACK WHILE THE PRESSURE IS RELEASED FROM THE COOLING SYSTEM. WHEN YOU ARE SURE ALL THE PRESSURE HAS BEEN RELEASED, (STILL WITH A CLOTH) TURN AND REMOVE THE PRESSURE RELIEF CAP.

Official Licensed Reprint
Ford Motor Company

⚠ CAUTION: The coolant must be recovered in a suitable, clean container for reuse. If the coolant is contaminated it must be recycled or disposed of properly.

NOTE: About 80% of coolant capacity can be recovered with the engine in the vehicle. Dirty, rusty or contaminated coolant requires replacement.

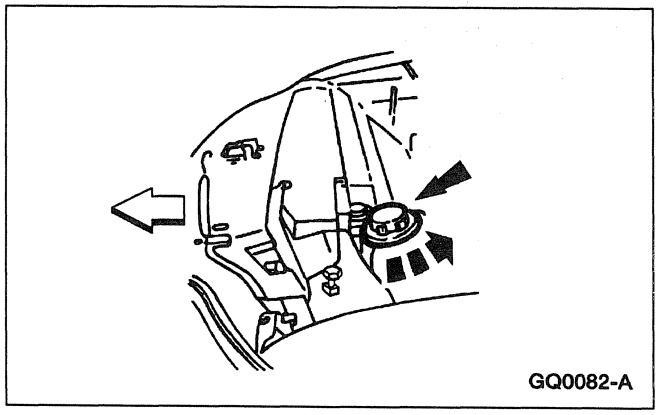
GQ0082-A

1. Release the pressure in the cooling system by slowly turning the pressure relief cap one half turn counterclockwise. When the pressure is released, remove the pressure relief cap.

GENERAL PROCEDURES (Continued)

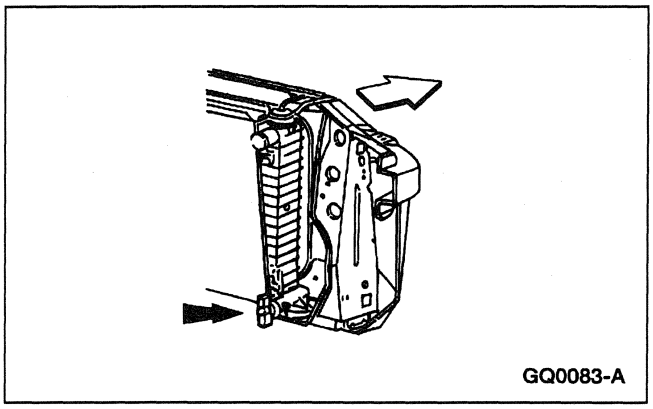
GQ0083-A

2. Place a suitable container below the radiator draincock (8115). If equipped disconnect the coolant return hose at the fluid cooler.

3. Open the radiator draincock. Remove the cylinder drain plug, if equipped, to drain the coolant from the cylinder block (6010).

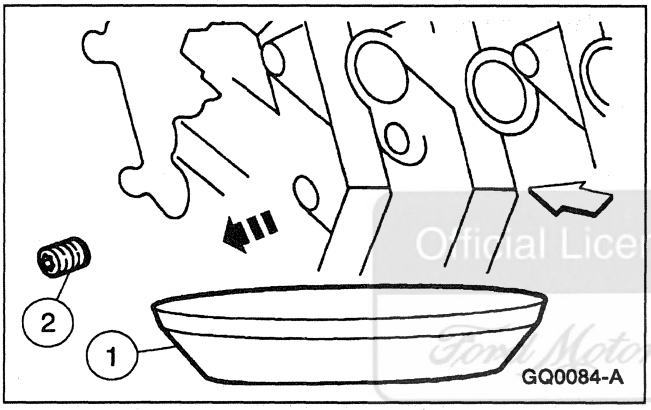

GQ0084-A

4. When the coolant is drained, make sure drain plugs are installed and tight.
   1 Place a drain pan below the cylinder block.
   2 Remove the drain plugs.

Original Licensed Product
Ford Motor Company

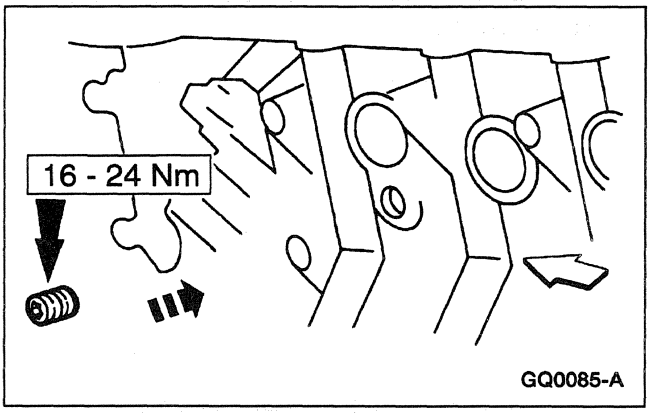

GQ0085-A

5. Close the radiator draincock when finished.

GENERAL PROCEDURES (Continued)

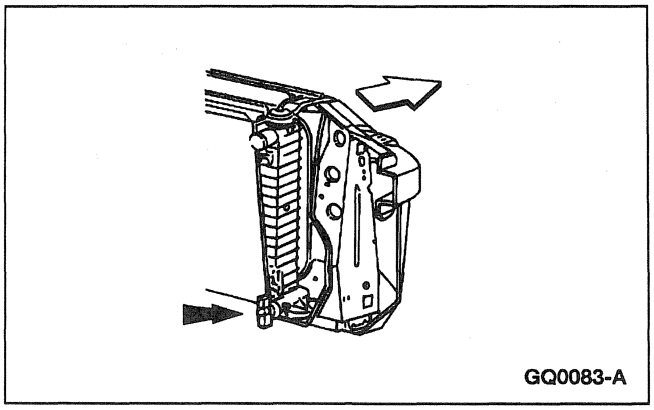
GQ0083-A

Filling

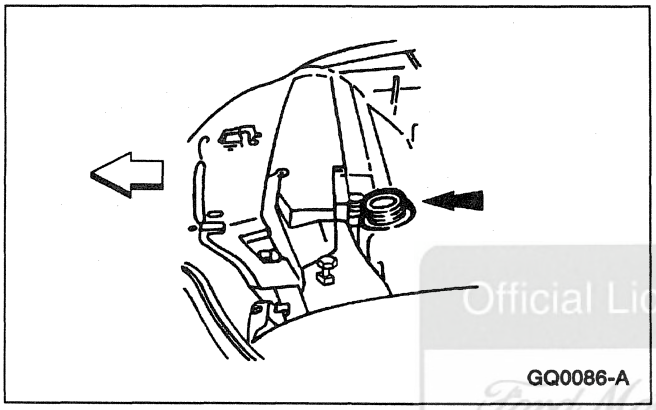
GQ0086-A

1. Add the proper engine coolant mixture to the degas bottle.

Official Licensed Product
Ford Motor Company

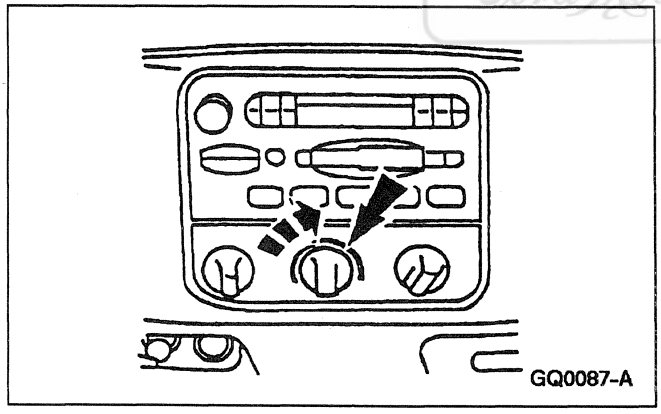
GQ0087-A

2. Move the temperature blend selector to the full warm position.

3. Run the engine until it reaches operating temperature.

4. Add the proper engine coolant mixture to the degas bottle until the coolant level is between the "COOLANT FILL LEVEL" marks.

5. Turn off the engine and allow the cooling system to cool.

GENERAL PROCEDURES (Continued)

6. Repeat Steps 1 through 5 until the degas bottle level is OK.

Bleeding

1. Select the maximum heater temperature and blower motor speed settings. Position the control to discharge air at A/C vents in instrument panel (04320).

2. Start the engine and allow to idle. While engine is idling, feel for hot air at A/C vents.

3. ⚠ **CAUTION: If air discharge remains cool and engine coolant temperature gauge does not move, engine coolant level is low in engine and must be filled. Stop engine, allow to cool and fill cooling system.**

   Start engine and allow to idle until normal operating temperature is reached. Hot air should discharge from A/C vents. The engine coolant temperature gauge should maintain a stabilized reading in the middle of the NORMAL range and the upper radiator hose (8260) should feel hot to the touch.

Official Licensed Ford Motor Company

4. Shut the engine off and allow to cool.

5. Check the engine for coolant leaks.

6. Check the engine coolant level in degas bottle and fill as necessary.

GENERAL PROCEDURES (Continued)

Flushing — Engine and Radiator

Special Tool(s)

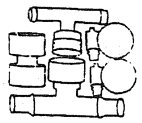 ST1168-A	Flush Kit Hardware Package 164-R3658 or equivalent
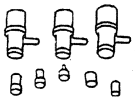 ST1167-A	Drain Kit 164-R3662 or equivalent
ST1166-A	Flush-All Flusher 164-R3663 or equivalent

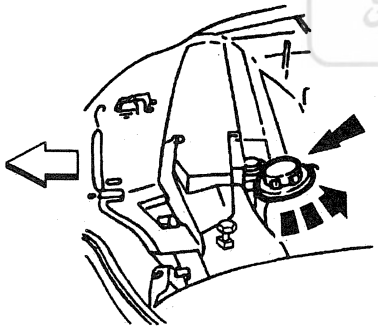
GQ0082-A

Official Licensed Product
Ford Motor Company

1. **⚠ WARNING: NEVER REMOVE THE PRESSURE RELIEF CAP WHILE THE ENGINE IS OPERATING OR WHEN THE COOLING SYSTEM IS HOT. FAILURE TO FOLLOW THESE INSTRUCTIONS CAN RESULT IN DAMAGE TO THE COOLING SYSTEM OR ENGINE OR PERSONAL INJURY. TO AVOID HAVING SCALDING HOT COOLANT OR STEAM BLOW OUT OF THE DEGAS BOTTLE WHEN REMOVING THE PRESSURE RELIEF CAP, WAIT UNTIL THE ENGINE HAS COOLED, THEN WRAP A THICK CLOTH AROUND THE PRESSURE RELIEF CAP AND TURN IT SLOWLY. STEP BACK WHILE THE PRESSURE IS RELEASED FROM THE COOLING SYSTEM. WHEN YOU ARE SURE ALL THE PRESSURE HAS BEEN RELEASED, (STILL WITH A CLOTH) TURN AND REMOVE THE PRESSURE RELIEF CAP.**

   Once pressure is released, remove the pressure relief cap.

   Drain the cooling system; refer to Cooling System Draining, Filling and Bleeding in this section.

GENERAL PROCEDURES (Continued)

2. Remove the water thermostat (8575); refer to Thermostat in this section.

3. Install the water hose connection (8592) without the water thermostat.

4. **NOTE:** Refer to the cooling system Flush-All Operating Instructions for specific vehicle hook-up.

   Use cooling system Flush-All, Flush Kit Hardware Package and Drain Kit to flush the engine and radiator.

   Use Ford Premium Cooling System Flush F1AZ-19A503-A meeting Ford specification ESR-M14P7A.

5. Install the water thermostat; refer to Thermostat in this section.

6. Backflush the heater core (18476) if necessary; refer to Backflushing—Heater Core in this section.

7. Fill the cooling system; refer to Cooling System Draining, Filling and Bleeding in this section.

Official Licensed Product
Ford Motor Company®

Backflushing — Heater Core

Special Tool(s)

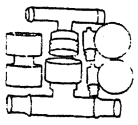 ST1168-A	Flush Kit Hardware Package 164-R3658 or equivalent
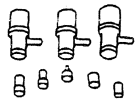 ST1167-A	Drain Kit 164-R3662 or equivalent

GENERAL PROCEDURES (Continued)

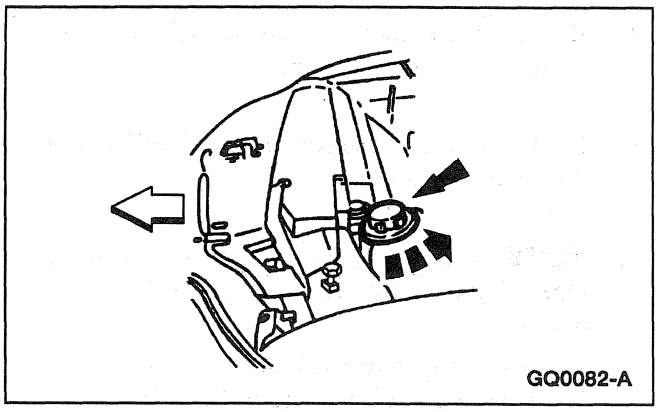

1. **WARNING: NEVER REMOVE THE PRESSURE RELIEF CAP WHILE THE ENGINE IS OPERATING OR WHEN THE COOLING SYSTEM IS HOT. FAILURE TO FOLLOW THESE INSTRUCTIONS CAN RESULT IN DAMAGE TO THE COOLING SYSTEM OR ENGINE OR PERSONAL INJURY. TO AVOID HAVING SCALDING HOT COOLANT OR STEAM BLOW OUT OF THE DEGAS BOTTLE WHEN REMOVING THE PRESSURE RELIEF CAP, WAIT UNTIL THE ENGINE HAS COOLED, THEN WRAP A THICK CLOTH AROUND THE PRESSURE RELIEF CAP AND TURN IT SLOWLY. STEP BACK WHILE THE PRESSURE IS RELEASED FROM THE COOLING SYSTEM. WHEN YOU ARE SURE ALL THE PRESSURE HAS BEEN RELEASED, (STILL WITH A CLOTH) TURN AND REMOVE THE PRESSURE RELIEF CAP.**

   Once pressure is released, remove the pressure relief cap.

Official Licensed Product
Ford Motor Company

2. Partially drain the cooling system; refer to Cooling System Draining, Filling and Bleeding in this section.

3. **NOTE:** Refer to the cooling system Flush-All Operating Instructions for particular vehicle hook-up.

   Use cooling system Flush-All, Flush Kit Hardware Package and Drain Kit to backflush the hater core. Use Ford Premium Cooling System Flush F1AZ-19A503-A meeting Ford specification ESR-M14P7A.

4. Fill the cooling system; refer to Cooling System Draining, Filling and Bleeding in this section.

SPECIFICATIONS

Cooling System Refill Capacity

Liters	Quarts
15.1	16.0

To convert to imperial measure, multiply U.S. quarts shown by 0.83.

Capacities shown include radiator coolant recovery reservoir filled to FULL COLD mark.

Cooling System Pressure Specifications

Description	Pressure
Radiator Pressure Test	138 kPa (20 psi)
Pressure Relief Cap Pressure	110 kPa (16 psi) + 14 kPa (2 psi)-21 kPa (3psi)

Water Thermostat Opening Temperature

Starts to Open	Fully Open
86.7-90.6° C (180°-193° F)	100° C (212° F)

General Specifications

Item	Specification
Premium Engine Coolant E2FZ-19549-AA E2FZ-19549-B (in Oregon, F5FZ-19549-CC, in Canada, Motorcraft CXC-8-B) or recycled Coolant	ESE-M97B44-A
Premium Cooling System Flush F1AZ-19A503-A	ESR-M14P7-A
Pipe Sealant with Teflon® D8AZ-19554-A	WSK-M2G350-AZ EST-M18P7-A
Dow Corning Silastic 734-R7V	—
Dow Corning	1200 Primer
Premium Long-Life Grease XG-1-C	ESA-M1C75-B

Torque Specifications

Description	Nm	Lb/Ft	Lb/In
Fan Shroud-to-Radiator	5.7-7.2	—	46-64
Fluid Cooler Line Nut-to-Fitting	24-31	18-23	—
Thermostat Housing Bolts	20-30	15-22	—
Radiator Draincock	0.7-1.4	—	6-12
Transmission Oil Cooler Line Connectors-to-Radiator	24.4-28.5	18-21	—
Degas Bottle Retaining Bolt	5.2-7.2	—	46-64
VCRM Bracket Bolt	9.5	—	85
Water Temperature Indicator Sender Unit	16-24	12-17	—
Water Pump-to-Cylinder Block	20-30	15-22	—
Water Pump Pulley-to-Water Pump	20-30	15-22	—
Water Bypass Tube Fill Plug	15-18	11-13	—
Engine Appearance Cover Retaining Bolt	9-12	—	80-106
Engine Appearance Cover Retaining Nut	5.2-7.2	—	46-64
Block Heater Retaining Screw	1.6-1.8	—	14-16
Water Bypass Tube Retaining Bolts	8-12	—	71-106

Ford Motor Company Licensed Product

SECTION 303-04 Fuel Charging and Controls

VEHICLE APPLICATION: Mark VIII

SUBJECT	PAGE
DESCRIPTION AND OPERATION	
Fuel Charging and Controls	303-04-2
DIAGNOSIS AND TESTING	
Fuel Charging and Controls	303-04-5
REMOVAL AND INSTALLATION	
Fuel Injectors	303-04-8
Fuel Pulse Damper	303-04-13
Pressure Regulator — Fuel	303-04-12
Pressure Relief Valve	303-04-15
Supply Manifold — Fuel Injection	303-04-9
Throttle Body	303-04-5
SPECIFICATIONS	303-04-16

Official Licensed Product
Ford Motor Company

DESCRIPTION AND OPERATION

Fuel Charging and Controls

⚠ WARNING: DO NOT SMOKE, CARRY LIGHTED TOBACCO OR OPEN FLAME OF ANY TYPE WHEN WORKING ON OR NEAR ANY FUEL-RELATED COMPONENT. HIGHLY FLAMMABLE MIXTURES ARE ALWAYS PRESENT AND MAY BE IGNITED, RESULTING IN POSSIBLE PERSONAL INJURY.

NOTE: When the battery (10653) has been disconnected and reconnected, some abnormal drive symptoms may occur while the powertrain control module (PCM)(12A650) relearns its adaptive strategy. The vehicle may need to be driven 18 km (10 miles) or more to relearn the strategy; refer to Section 414-01.

An on-board vehicle powertrain control module :

- accepts signals from various electronic engine sensors to compute the required fuel flow rate necessary to maintain a prescribed air/fuel ratio throughout the entire engine operational range.
- sends a command to the fuel injectors to meter the appropriate quantity of fuel.
- determines and compensates for the age of the vehicle and its uniqueness.
- automatically senses and compensates for changes in altitude (for example, from sea level to mountains).

The fuel delivery subsystem delivers fuel to the fuel charging system and consists of:

- a high-pressure, in-tank mounted, electric fuel pump (9350) .
- a fuel filter/reservoir delivering fuel from the fuel tank through a 20-micron fuel filter (9155) to a fuel injection supply manifold (9F792) to the fuel injector to the fuel pressure regulator (9C968) .
- the fuel injection supply manifold which incorporates electrically-actuated fuel injectors directly above each of the engine's intake ports.
- the fuel injectors, which when energized, spray a metered quantity of fuel into the intake air stream.

A constant fuel pressure drop is maintained across the fuel injectors by a fuel pressure regulator which is:

- connected in series with the fuel injectors.
- positioned downstream from fuel injectors.

Excess fuel supplied by the fuel pump , but not required by the engine, passes through the fuel pressure regulator and returns to the fuel tank (9002) through a fuel return line.

Fuel Injection Timing

For fuel injection timing:

- Each fuel injector is energized once every other crankshaft revolution in sequence with ignition firing order.
- The period of time that the fuel injectors are energized (injector ON time or pulse width) is controlled by the vehicle's powertrain control module .
- Air entering the engine is monitored by flow and temperature sensors.
- The outgoing signals of the electronic engine control sensors are processed by the powertrain control module .
- The powertrain control module determines the needed injector pulse width and sends a command to the fuel injectors to meter the exact quantity of fuel.

Official Licensed Product
Ford Motor Company

Sequential Multiport Fuel Injection (SFI)

The sequential multiport fuel injection (SFI) system is classified as follows:

- multi-point
- pulse time
- mass air flow-controlled

Fuel is metered into each intake port in sequence with the ignition firing order in accordance with engine demand through the fuel injectors mounted on the tuned lower intake manifolds (9424) .

Air Induction System

The air induction system supplies filtered air to the engine to mix with the fuel for combustion purposes and consists of the following:

- engine air cleaner (ACL)(9600) with air cleaner element (ACL element)(9601)
- air cleaner outlet tube (9B659)
- throttle body (9E926)
- engine intake air resonator (9F763)

DESCRIPTION AND OPERATION (Continued)

- upper intake manifold
- the lower intake manifolds which incorporate the intake manifold runner control (IMRC) assemblies located between the upper intake manifold and the cylinder heads (6049)

Throttle Body

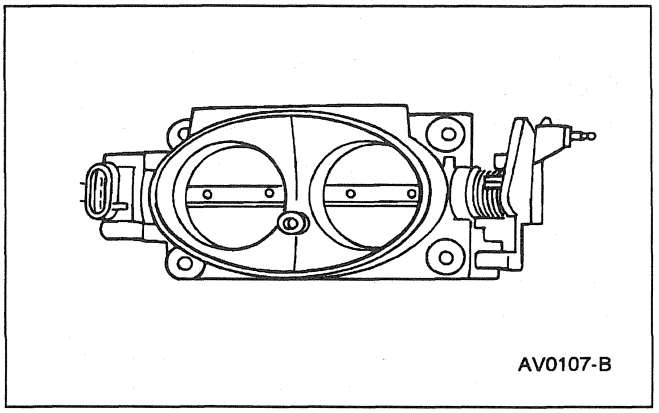

The throttle body functions as follows:

- The throttle body controls airflow to the engine.
- A single lever and accelerator cable (9A758) rotate the throttle shaft from idle to wide open throttle (WOT) position.
- The plate position at idle is set by the lever contacting a throttle return control screw. The head of the throttle return control screw is removed to make the idle plate set permanent.
- The idle airflow is controlled by an idle air control valve (IAC valve)(9F715) which is mounted on the upper intake manifold .
- The WOT plate position is obtained when the lever contacts the body casting.
- At all throttle positions, the throttle position sensor (TP sensor)(9B989) produces an electrical signal which is sent to the powertrain control module .
- A sealant is applied to the downstream side of the throttle body plate and bore to reduce plate-to-bore leakage. The sealant may be deteriorated by cleaning solvent. Do not remove sealant by cleaning the throttle body.

Intake Manifold

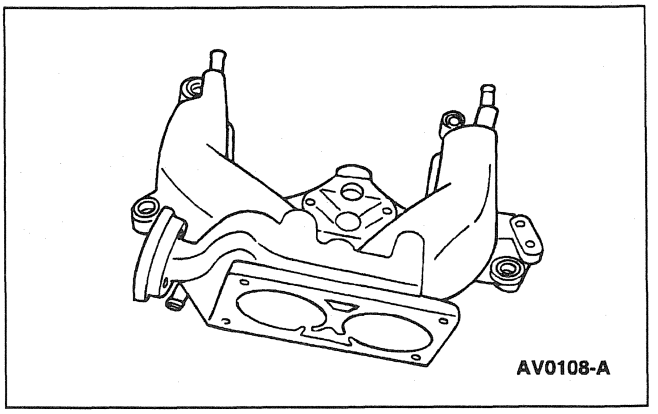

The upper intake manifold :

- is a one-piece aluminum casting used in conjunction with lower intake manifolds (IMRC)located between the upper intake manifold and the cylinder heads .
- has runner lengths which are tuned to optimize engine torque and power output.
- has pockets for the fuel injectors, which are machined to prevent both air and fuel leakage into the lower intake manifolds (IMRC).
- has fuel injectors mounted in position to direct the fuel spray immediately in front of each engine intake valve (6507) .

Fuel Injectors

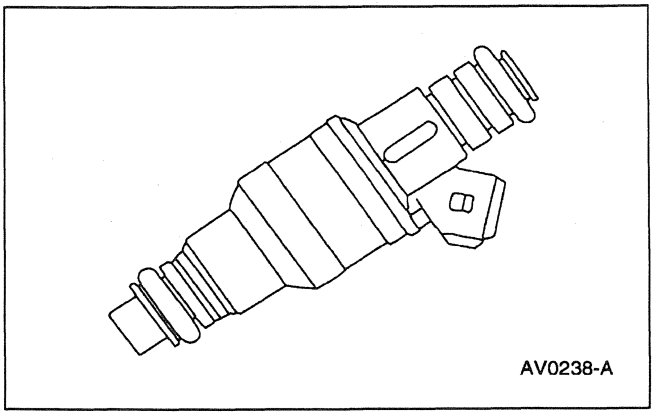

Ford Motor Company Licensed Product

DESCRIPTION AND OPERATION (Continued)

The eight fuel injectors are:

- electro-mechanical devices which both meter and atomize fuel delivered to the engine.
- mounted in the lower intake manifolds (IMRC) and positioned so that their tips direct fuel just ahead of the engine intake valves .

The fuel injector bodies consist of the following:

- solenoid
- needle and valve assembly
- director/metering plate

An electrical control signal from the powertrain control module activates the injector solenoid, causing the needle to move inward off the seat and allowing fuel to flow. Since the fuel injector flow orifice is fixed and the fuel pressure drop across the injector tip is constant:

- fuel flow to the engine is regulated by the length of time the solenoid is energized.
- atomization is obtained by the contour of the pintle at the outlet of the fuel injectors.

Fuel Injection Supply Manifold

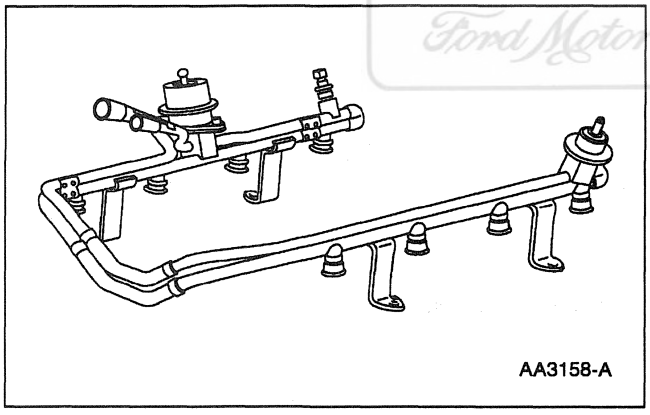

AA3158-A

The fuel injection supply manifold delivers high-pressure fuel from the vehicle fuel supply line to the eight fuel injectors. The fuel injection supply manifold consists of the following:

- a tubular fuel rail
- eight fuel injector connectors
- mounting flange for the fuel pressure regulator
- mounting adapter for fuel pressure adapter
- mounting attachments which locate the fuel injection supply manifold and provide fuel injector retention
- fuel inlet and outlet connections with push connect fittings
- fuel pulse damper retaining cup.

Fuel Pressure Regulator

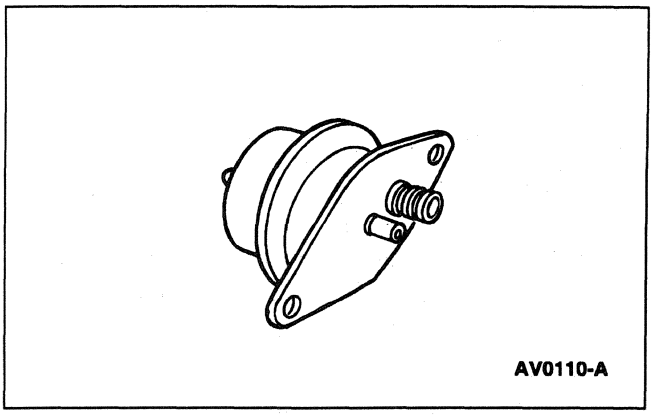

AV0110-A

The fuel pressure regulator :

- is mounted on the fuel injection supply manifold downstream of the fuel injectors.
- regulates the fuel pressure supplied to the fuel injectors.
- is a diaphragm-operated relief valve. One side of the diaphragm senses fuel pressure and the other side is subjected to intake manifold vacuum.
- obtains nominal fuel pressure by a spring preload applied to the diaphragm.
- balances one side of the diaphragm with manifold pressure to maintain a constant fuel pressure drop across the fuel injectors.
- bypasses and returns excess fuel to the fuel tank.

Fuel Pressure Relief Valve

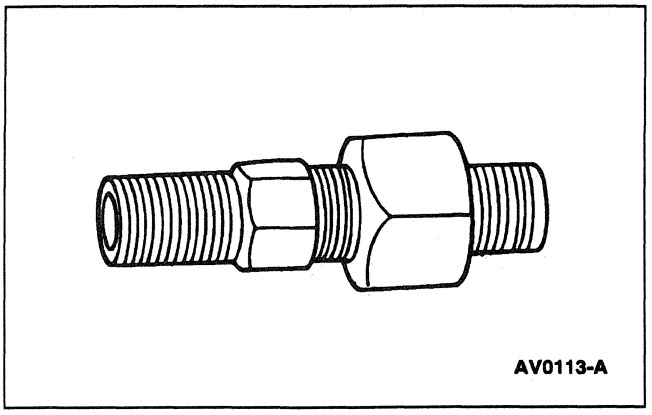

AV0113-A

Official Licensed Product
Ford Motor Company

DESCRIPTION AND OPERATION (Continued)

The fuel pressure relief valve (9H321) :

- is used to relieve fuel pressure from the fuel delivery system.
- is located on the fuel injection supply manifold .

For fuel system pressure relief procedures, refer to Section 310-00.

Fuel Charging Wiring

The fuel charging wiring (9D930) :

- connects the engine wiring harness to each fuel injector and other electronic engine controls such as throttle position sensor and idle air control valve .
- receives fuel injector signals from the powertrain control module and transfers the signals to the fuel injectors.

The signals from the powertrain control module determine the fuel injection sequence and duration each fuel injector will stay open to allow fuel into the combustion chambers.

Inertia Fuel Shutoff (IFS) Switch

The inertia fuel shutoff switch (IFS switch)(9341) :

- is used in conjunction with an electric fuel pump .
- shuts off the fuel pump in the event of a collision.
- consists of a steel ball held in place by a magnet.

When a sharp impact occurs:

- the ball breaks loose from the magnet, rolls up a ramp and strikes a target plate which opens the electrical contacts of the inertia fuel shutoff switch . This shuts off the fuel pump .
- the inertia fuel shutoff switch must be manually reset before restarting the vehicle.

Fuel Pump Relay

The fuel pump relay (14N089) supplies power to the fuel pump when the powertrain control module grounds the relay during START and engine RUN conditions.

Official Licensed Product
Ford Motor Company

DIAGNOSIS AND TESTING

Fuel Charging and Controls

Refer to Powertrain Control/Emissions Diagnosis Manual [1].

REMOVAL AND INSTALLATION

Throttle Body

Removal

WARNING: DO NOT SMOKE, CARRY LIGHTED TOBACCO OR AN OPEN FLAME OF ANY TYPE WHEN WORKING ON OR NEAR ANY FUEL-RELATED COMPONENT. HIGHLY FLAMMABLE MIXTURES ARE ALWAYS PRESENT AND MAY BE IGNITED, RESULTING IN POSSIBLE PERSONAL INJURY.

1. Remove the air cleaner outlet tube (9B659) ; refer to Section 303-12.

1 Can be purchased as a separate item.

REMOVAL AND INSTALLATION (Continued)

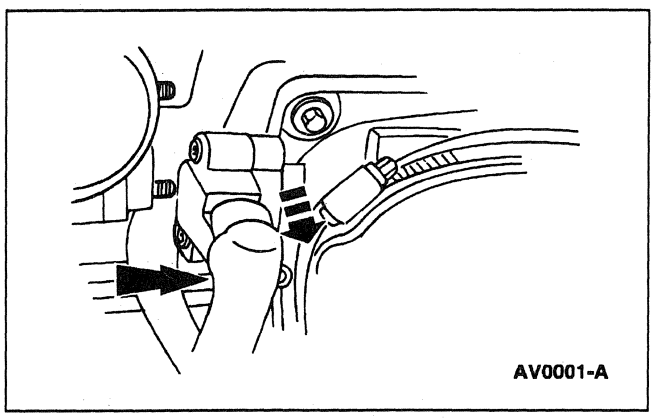

2. Slide boot on fuel charging wiring (9D930) back from the throttle position sensor (TP sensor)(9B989) .

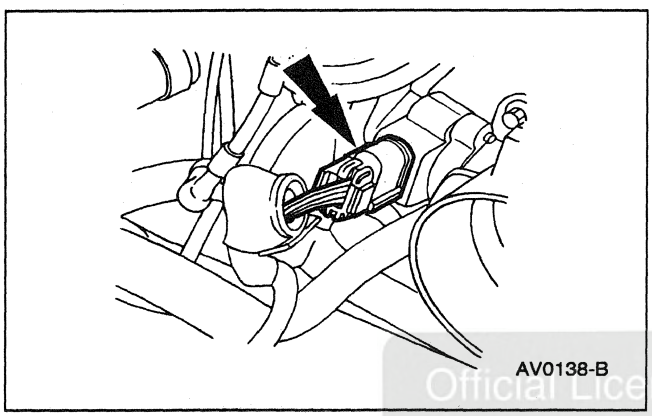

3. Disconnect the fuel charging wiring from the throttle position sensor .

Official Licensed Product
Ford Motor Company

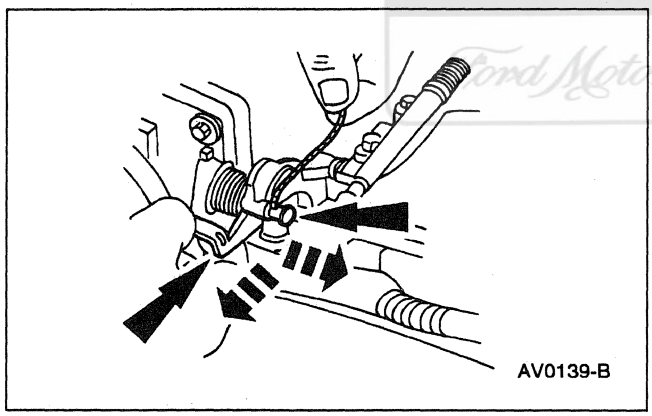

4. Move the throttle lever and disconnect the accelerator cable (9A758) .

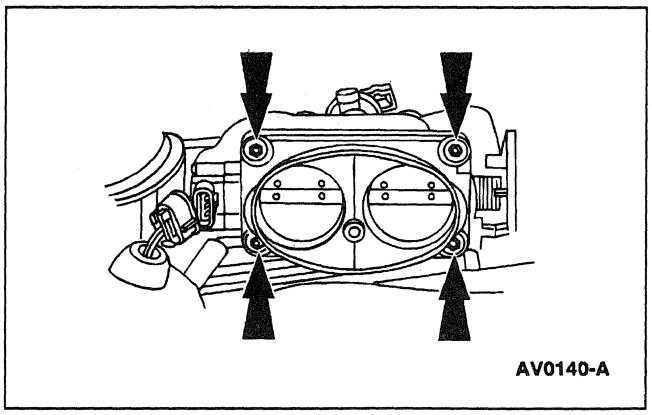

5. Remove the bolts from the throttle body (9E926) .

REMOVAL AND INSTALLATION (Continued)

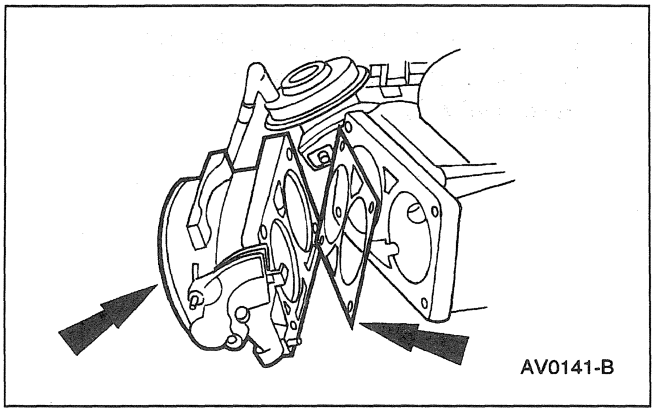

6. Remove the throttle body and the gasket from the vehicle.

7. The throttle body for this vehicle is a sludge-resistant design with a coating on the bore and plate. Sludge accumulation will not affect the throttle body airflow. Any attempt to clean the bore and plate area will impair the effectiveness of the co ating. Do not clean the bore and plate area of the throttle body .

8. The throttle body for this vehicle cannot be adjusted.

Official Licensed Product
Ford Motor Company

9. Clean the gasket mating surfaces.

Installation

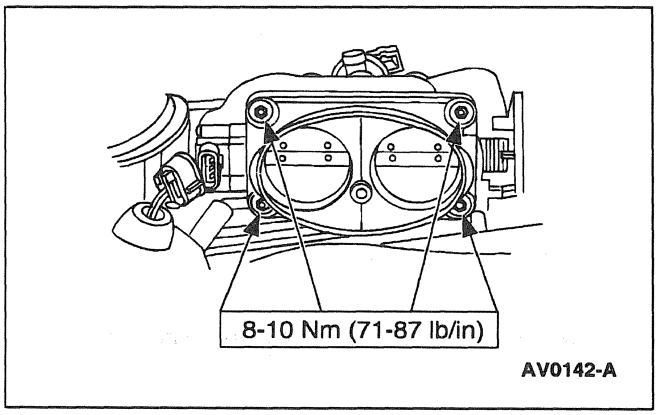

1. Follow the removal procedure in reverse order.

2. After the bolts are tightened, rotate an additional 85-95 degrees.

REMOVAL AND INSTALLATION (Continued)

Fuel Injectors

Removal

1. Relieve the fuel system pressure.
2. Remove the fuel injection supply manifold (9F792) ; refer to Supply Manifold—Fuel Injection in this section.
3. Grasping fuel injector body, pull up while gently rocking the fuel injectors from side to side.

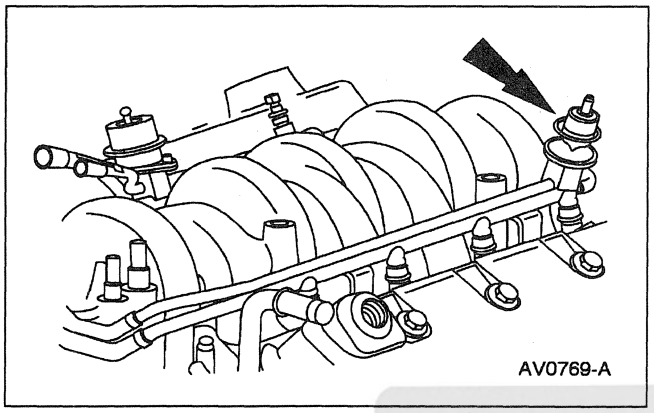

Official Licensed Product
Ford Motor Company

4. Inspect the fuel injector O-rings for deterioration.

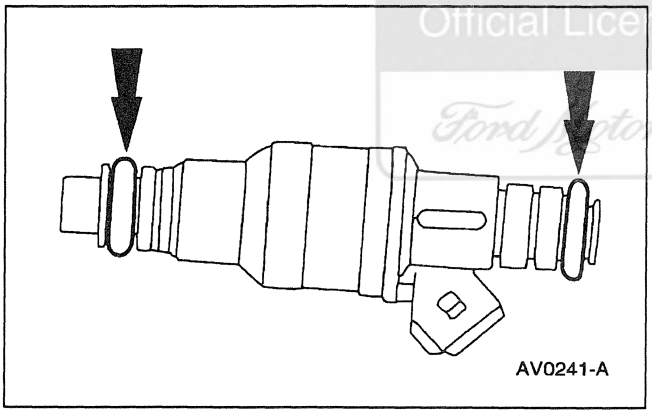

5. Inspect the fuel injector cap, the body and the washer for dirt or signs of deterioration.

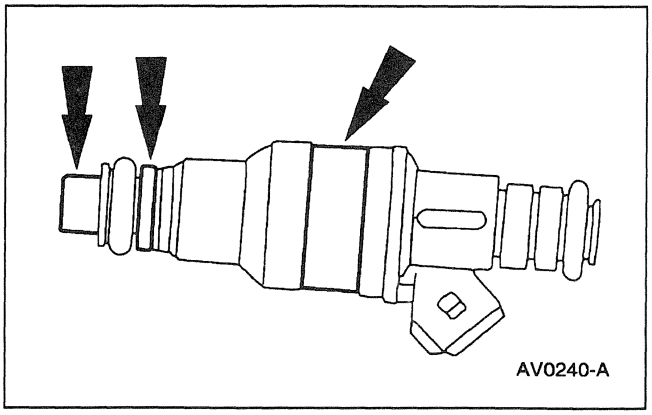

REMOVAL AND INSTALLATION (Continued)

6. ⚠ **CAUTION: Never use silicone grease. Silicone grease will clog the fuel injectors.**

   Replace the O-rings as required.

   - Lubricate the new O-rings with clean engine oil meeting Ford specification WSS-M2C153-G.

Installation

1. Follow the removal procedure in reverse order.
2. Pressurize the system and inspect for leaks.

Supply Manifold — Fuel Injection

Removal

1. Relieve the fuel system pressure.
2. Remove the air cleaner outlet tube (9B659) ; refer to Section 303-12.
3. Remove the upper intake manifold (9424) ; refer to Section 303-01.
4. Disconnect the vacuum line from the fuel pressure regulator (9C968).

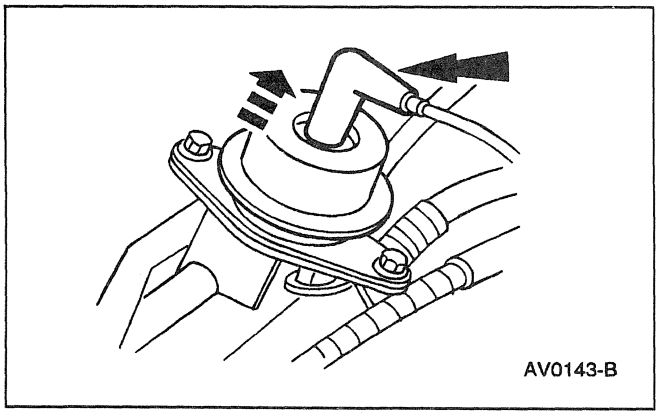

Official Licensed Product
Ford Motor Company

REMOVAL AND INSTALLATION (Continued)

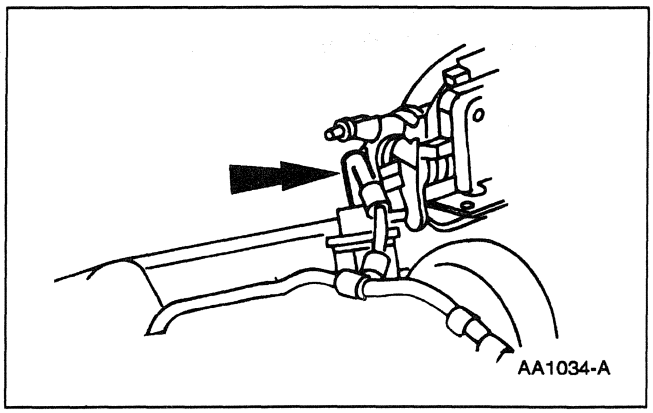

5. Disconnect the vacuum line from the fuel pulse damper.

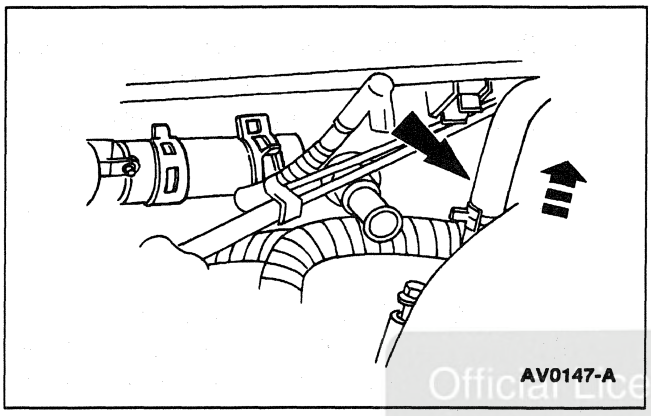

6. Disconnect the power brake booster vacuum line from the upper intake manifold .

Official Licensed Product
Ford Motor Company

7. Disconnect the spring lock coupling; refer to Section 310-00.

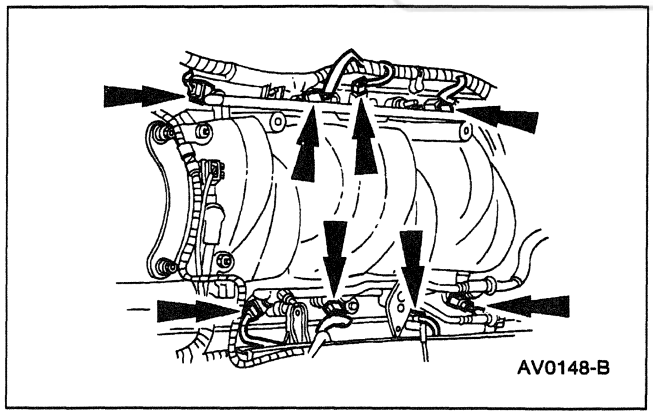

8. Disconnect the fuel charging wiring connectors.

REMOVAL AND INSTALLATION (Continued)

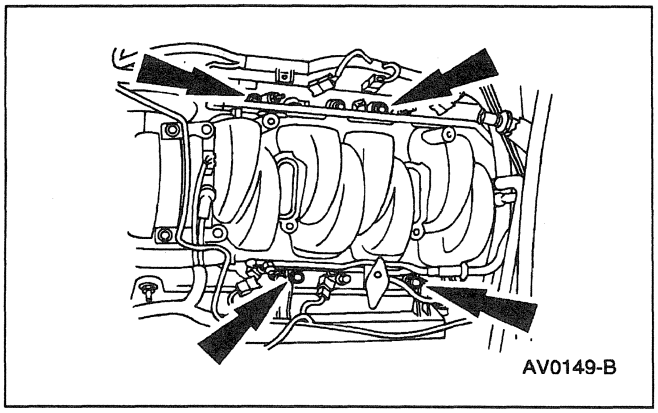

9. Remove the bolts from the fuel injection supply manifold (9F792) .

10. **NOTE:** Use a rocking, side-to-side motion while lifting the fuel injection supply manifold .

    Remove the fuel injection supply manifold from the vehicle.

Installation

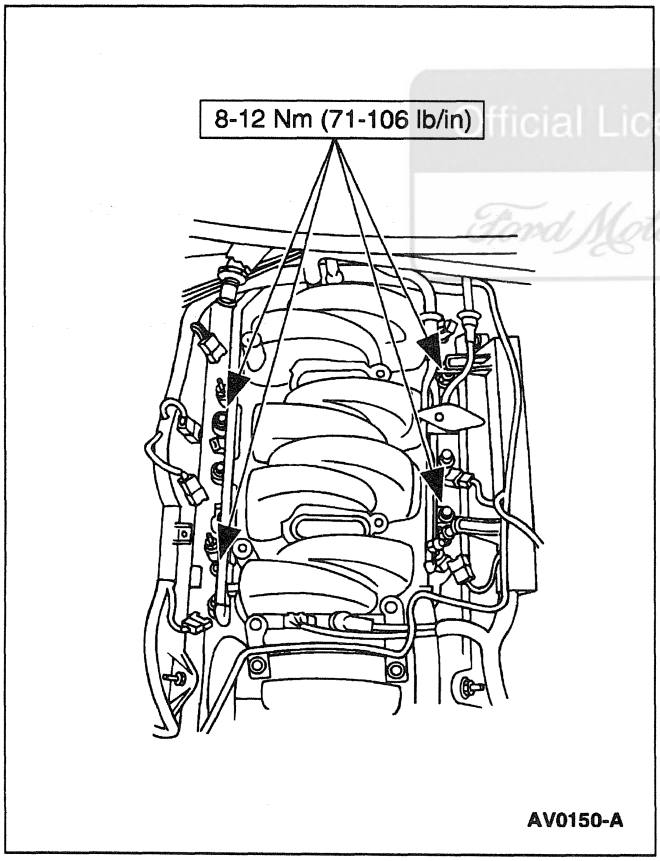

1. ⚠ **CAUTION: When installing fuel injection supply manifold , make sure that the fuel injector O-rings are properly seated so no fuel leaks exist.**

   Follow the removal procedure in reverse order.

2. Pressurize the system and inspect for leaks.

Official Licensed Ford Motor Company

REMOVAL AND INSTALLATION (Continued)

Pressure Regulator — Fuel

Removal

1. Relieve the fuel system pressure.

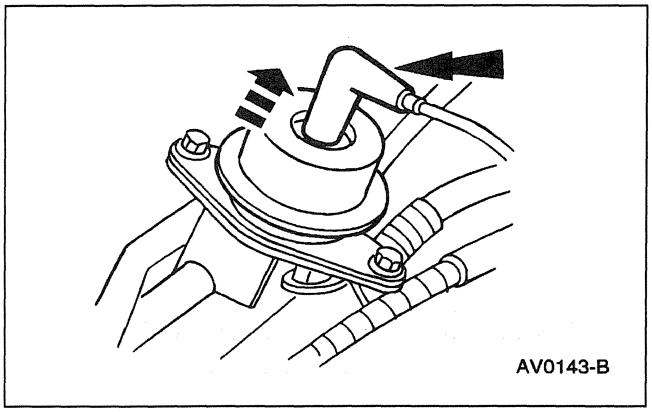

2. Remove the vacuum line from the fuel pressure regulator (9C968) .

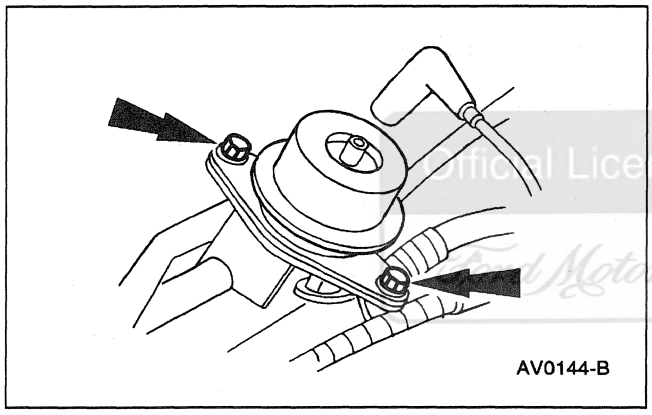

3. Remove the bolts from the fuel pressure regulator .

Official Licensed Product
Ford Motor Company

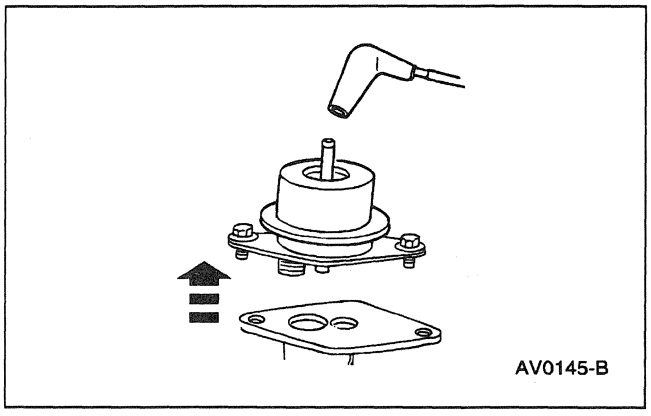

4. Remove the fuel pressure regulator .

5. **CAUTION: Never use silicone grease. Silicone grease will clog the fuel injectors (9F593) .**

   Lubricate the new fuel pressure regulator O-rings with clean engine oil meeting Ford specification WSS-M2C153-G.

REMOVAL AND INSTALLATION (Continued)

Installation

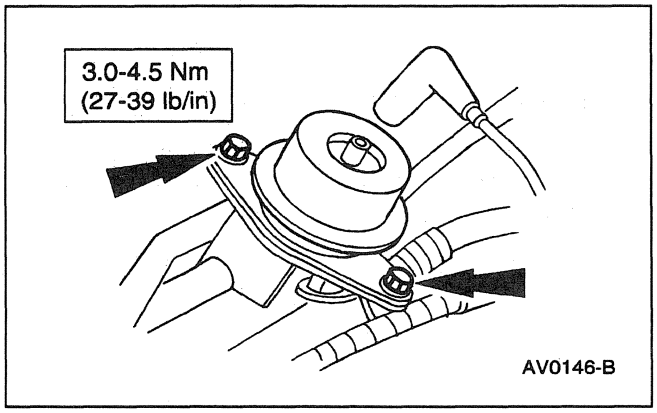

1. Follow the removal procedure in reverse order.

2. Pressurize the system and inspect for leaks.

Fuel Pulse Damper

Removal

Official Licensed Product
Ford Motor Company

1. Relieve the fuel system pressure.

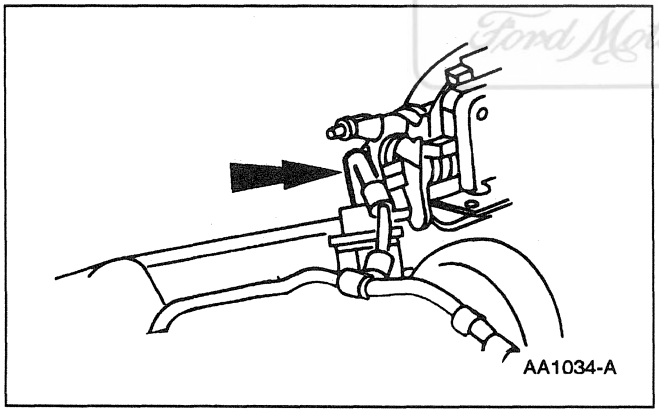

2. Disconnect the vacuum line.

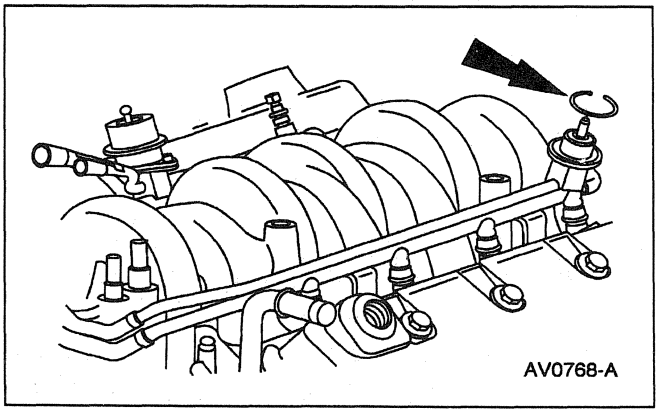

3. Remove the snap ring.

REMOVAL AND INSTALLATION (Continued)

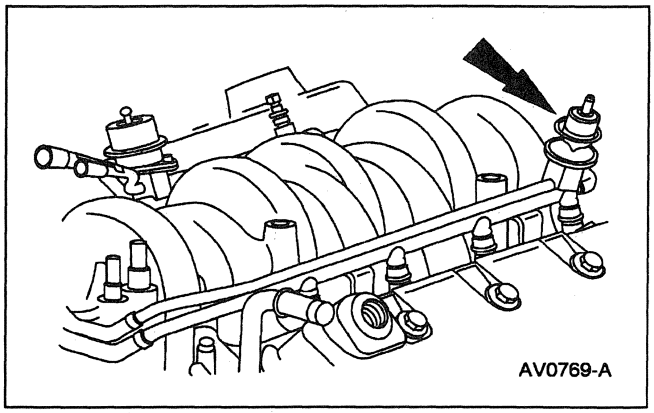

4. Remove the fuel pulse damper.

5. Remove and discard the O-ring.

Installation

1. **CAUTION: Never use silicone grease. Silicone grease will clog the fuel injectors.**
   Lubricate the O-ring with clean engine oil XO-10W30-QSP or -DSP or equivalent meeting Ford specification WSS-M2C153-G.

Official Licensed Product
Ford Motor Company

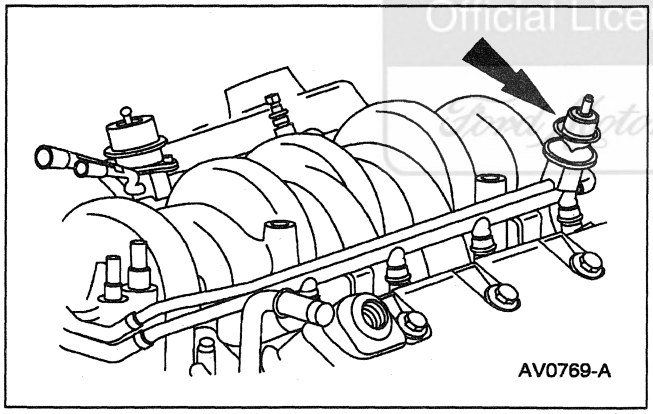

2. Install the fuel pulse damper and O-ring.

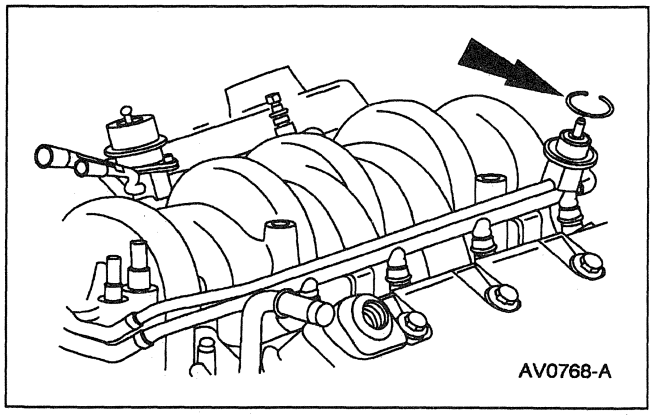

3. Install the snap ring.

REMOVAL AND INSTALLATION (Continued)

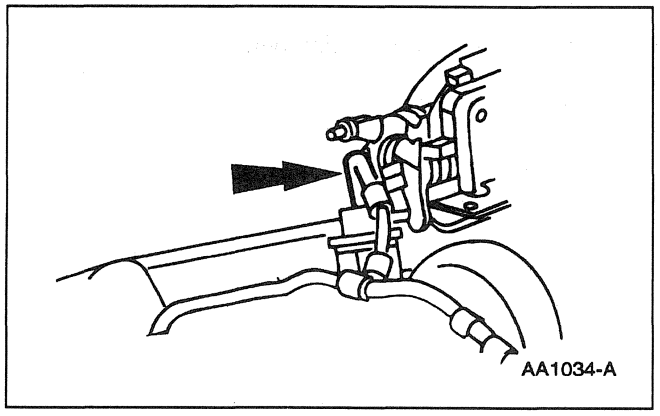

4. Connect the vacuum line.

5. Pressurize the system and inspect for leaks.

Pressure Relief Valve

Removal

WARNING: DO NOT SMOKE OR CARRY LIGHTED TOBACCO OR OPEN FLAME OF ANY TYPE WHEN WORKING ON OR NEAR ANY FUEL RELATED COMPONENTS. HIGHLY FLAMMABLE MIXTURES ARE ALWAYS PRESENT AND MAY BE IGNITED, RESULTING IN POSSIBLE PERSONAL INJURY.

WARNING: FUEL IN THE FUEL SYSTEM REMAINS UNDER HIGH PRESSURE EVEN WHEN THE ENGINE IS NOT RUNNING.

WARNING: BEFORE WORKING ON OR DISCONNECTING ANY OF THE FUEL LINES OR FUEL SYSTEM COMPONENTS, THE FUEL SYSTEM PRESSURE MUST BE RELIEVED.

1. Relieve the fuel pressure; refer to Section 310-00.

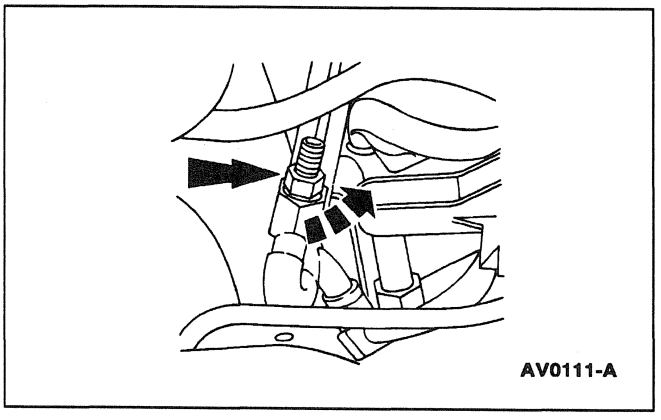

2. Remove the fuel pressure relief valve (9H321) .

REMOVAL AND INSTALLATION (Continued)

Installation

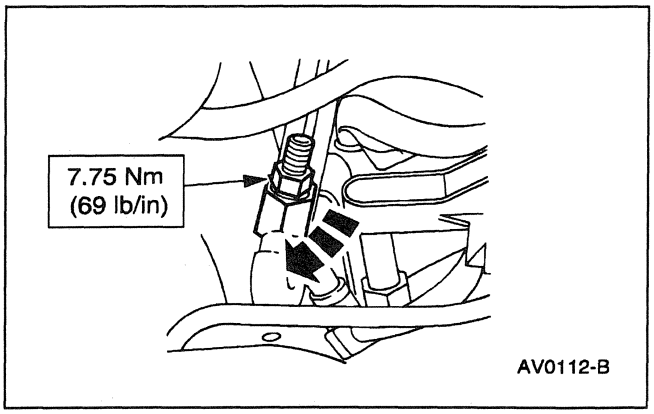

1. Follow the removal procedure in reverse order.

SPECIFICATIONS

Torque Specifications

Description	Nm	Lb/In
Throttle Body-to-Upper Intake Manifold	[a]	[a]
Fuel Pressure Regulator-to-Fuel Injection Supply Manifold	3.0-4.5	27-39
Fuel Injection Supply Manifold-to-Lower Intake Manifold	8-12	71-106

(Continued)

Torque Specifications

Description	Nm	Lb/In
Fuel Pressure Relief Valve-To-Fuel Injection Supply Manifold	7.75	68
Fuel Pressure Relief Valve Cap	0.6	5

a Tighten to 8-10 Nm (71-88 lb/in). Rotate an additional 85-95 degrees.

Official License Product
Ford Motor Company

SECTION 303-05 Accessory Drive

VEHICLE APPLICATION: Mark VIII

SUBJECT	PAGE
DESCRIPTION AND OPERATION	
Accessory Drive	303-05-2
DIAGNOSIS AND TESTING	
Accessory Drive	303-05-3
Component Test	303-05-4
Inspection and Verification	303-05-3
Symptom Chart	303-05-4
REMOVAL AND INSTALLATION	
Belt — Drive	303-05-5
Belt Tensioner — Automatic	303-05-6
GENERAL PROCEDURES	
Belt Adjustment	303-05-7
SPECIFICATIONS	303-05-8

Official Licensed Product
Ford Motor Company

DESCRIPTION AND OPERATION

Accessory Drive

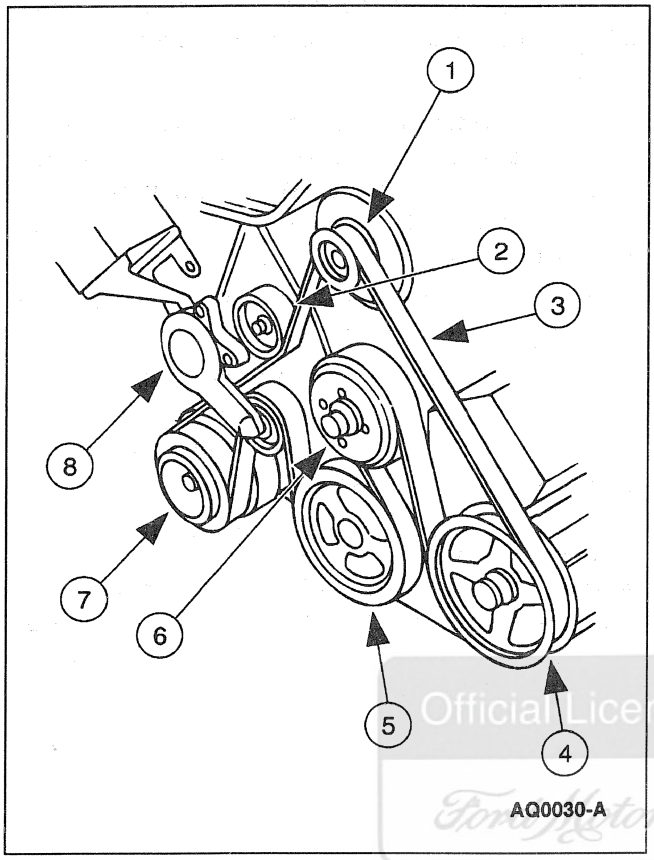

Item	Part Number	Description
1	10300	Generator
2	8678	Belt Idler Pulley
3	8620	Drive Belt
4	3A674	Power Steering Pump
5	6312	Crankshaft Pulley
6	8509	Water Pump Pulley
7	19703	A/C Compressor
8	6B209	Drive Belt Tensioner

NOTE: Drive belts (8620) with automatic drive belt tensioners (6B209) do not require adjustment.

NOTE: When an accessory drive belt is replaced or reinstalled after a service procedure, the drive belt does not fully seat into pulley grooves until the engine has run for several minutes.

This vehicle is equipped with:

- a V-ribbed serpentine accessory drive belt.
- automatic drive belt tensioner.

Replacement drive belts should be of the same type as originally installed.

The drive belt condition should be checked:

- at 160,000 km (100,000 miles)
- then every 40,000 km (25,000 miles)

V-Ribbed Drive Belt

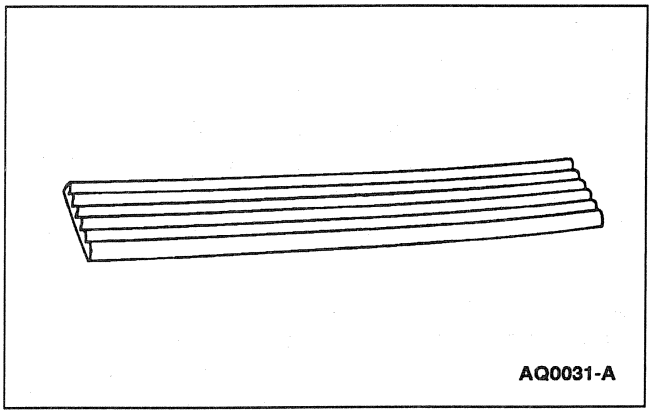

Drive belt chirp is a regularly occurring chirping noise that occurs due to:

- pulley misalignment.
- excessive pulley runout.

It can be a result of a damaged pulley or an improperly replaced pulley that was not properly aligned.

To correct drive belt chirp:

- Determine the area from which the noise originates.
- Check each of the pulleys in that area with a straightedge to the crankshaft pulley (6312).
- Look for the accessory pulley to be out of position in the fore/aft direction or at an angle to the straightedge.

Drive belt squeal is an intermittent noise that occurs when the drive belt slips on a pulley during certain conditions such as:

- engine start-up
- rapid engine acceleration
- A/C clutch engagement

Official Licensed Product
Ford Motor Company

DESCRIPTION AND OPERATION (Continued)

Drive belt squeal can occur under the following conditions:

- If the A/C discharge pressure goes above 2895 kPa (420 psi); this can occur if:
  - — the A/C system is overcharged.
  - — the A/C condenser airflow is blocked.
  - — the engine cooling fan is not engaging fully at idle.
- If A/C OFF equalized pressure (the common discharge and suction pressure that occurs after several minutes) exceeds 965 kPa (140 psi), which is a rare occurrence at high ambient temperatures with a hot engine, turn A/C OFF for a few seconds and then back ON after engine cooling fan begins to cool condenser.
- If any of the accessories are damaged, have a worn or damaged bearing or internal torsional resistance above normal for any reason; all of the accessories should be rotatable by hand in the unloaded condition. If any are not, the accessory should be inspected.
- If fluids get on the drive belt; this would include power steering fluid, engine coolant, engine oil, air conditioning system lubricant.

If fluids get on the drive belt during service, it is best to clean the drive belt with soap and water, then thoroughly rinse with clean water. The drive belt does not have to be replaced if no apparent damage has occurred.

- A drive belt that is too long will allow the drive belt tensioner arm to go all the way to stop under certain load conditions, which will take tension off the drive belt. If the drive belt tensioner is resting on the stop, replace the drive belt.
- If the drive belt tensioner is worn or damaged refer to the Component Test in this section.
- The drive belt tensioners are calibrated at the factory. There is no need to check the drive belt tensioner for proper tension unless the spring or other mechanical part of the drive belt tensioner fails.
- If a check is required, do the following: Remove the drive belt. Rotate the drive belt tensioner from its relaxed position through its full stroke and back to the relaxed position. Check to make sure that there is no stick, grab or bind. Check that there is tension on the drive belt tensioner spring.

Official Licensed Product
Ford Motor Company

DIAGNOSIS AND TESTING

Accessory Drive

Inspection and Verification

1. Verify the customer's concern by operating the engine to duplicate the condition.
2. Inspect to determine if any of the following mechanical concerns apply:

Visual Inspection Chart

Mechanical
• Drive belt noise or squeal • Pulley misalignment or excessive pulley runout

3. Inspect for drive belt cracking/chunking/wear; refer to the illustrations.
4. If the concerns remain after the inspection, determine the symptoms and go to the Symptom Chart.

Drive Belt Cracking/Chunking/Wear

Under severe operating conditions (high temperatures, low humidity), drive belt rib cracking can occur at less than 160,000 km, (100,000 miles). Drive belt rib cracking:

- is not a reason for concern.
- has no detrimental effect on drive belt performance.

The drive belt (8620) is still perfectly functional until rib chunking occurs. Drive belt chunking is where the rubber material actually chunks out between the cracks. The drive belt should be replaced if the chunks are 5 mm (0.019 inch) or longer.

DIAGNOSIS AND TESTING (Continued)

V-Ribbed Serpentine Drive Belt With Cracks Across Backing

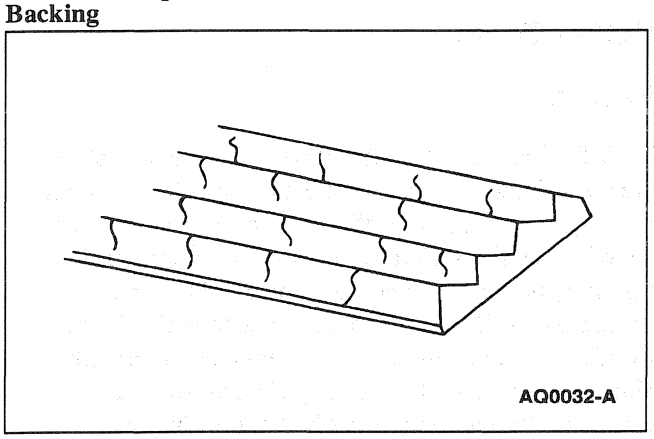

V-Ribbed Serpentine Drive Belt With Chunks of Rib Missing

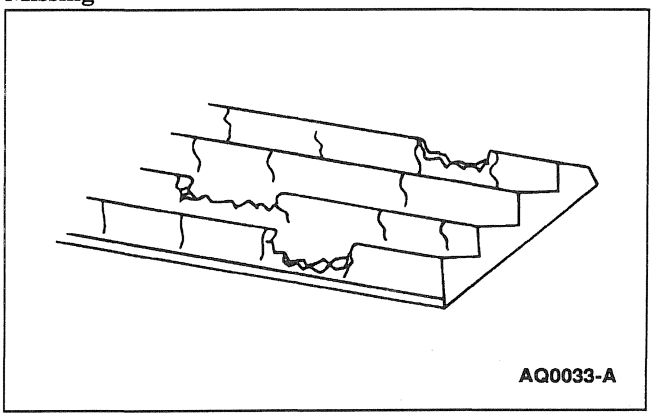

Symptom Chart

SYMPTOM CHART

Condition	Possible Source	Action
• Drive Belt Cracking	• Drive belt.	• System OK.
• Drive Belt Chunking	• Drive belt.	• REPLACE drive belt. REFER to Belt-Drive in this section.
• Drive Belt Noise or Squeal	• Drive belt. • Pulley(s).	• DETERMINE from which area of the pulley(s) the noise originates. Then CHECK that area with a straightedge and LOOK for the accessory pulley(s) to be out of position in the fore/aft direction or at an angle to the straightedge.

Officially Licensed Product
Ford Motor Company

Component Test

Belt Tensioner—Automatic

1. With the engine running, observe drive belt tensioner movement. The drive belt tensioner (6B209) should move (respond) when the A/C compressor (19703) cycles or when the engine is accelerated rapidly. If the drive belt tensioner movement is constant and excessive, a pulley or shaft is probably bent or a pulley is out of round. In rare cases, excessive drive belt rideout (uneven depth of grooves in drive belt, can cause excessive drive belt tensioner movement. This condition can be checked by replacing the suspect drive belt with a new drive belt and repeating the observation.
2. With engine off, check for proper routing of the drive belt. Refer to the illustrations under Belt—Drive, Removal and Installation. Service as required.
3. Inspect the drive belt tensioner wear indicator, refer to Belt Adjustment procedure in this section.

   Make sure the drive belt is within operating range. Replace the drive belt as required.
4. Rotate the front engine mounting lower bracket (6B029) and check for a binding or frozen condition. Replace drive belt tensioner as required.

REMOVAL AND INSTALLATION

Belt — Drive

Removal

NOTE: Cracks on the rib side of a drive belt (8620) are considered acceptable. If the drive belt has chunks missing from the ribs or if two or more adjacent ribs have lost sections 13 mm (0.5 inch) or longer or if the missing chunks are creating a noise, vibration or harshness (NVH) condition, replace the drive belt . Conditions requiring drive belt replacement are rib chunk-out, severe glazing, frayed cords or other concerns. Replace any drive belt exhibiting one of these conditions.

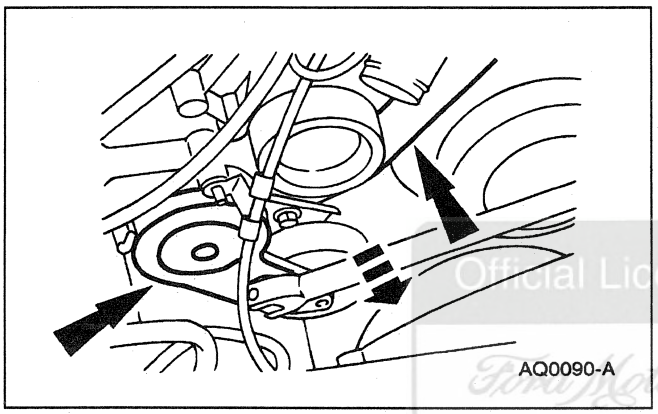

1. Rotate the drive belt tensioner (6B209) to remove the drive belt .

Official Licensed Product
Ford Motor Company

REMOVAL AND INSTALLATION (Continued)

Installation

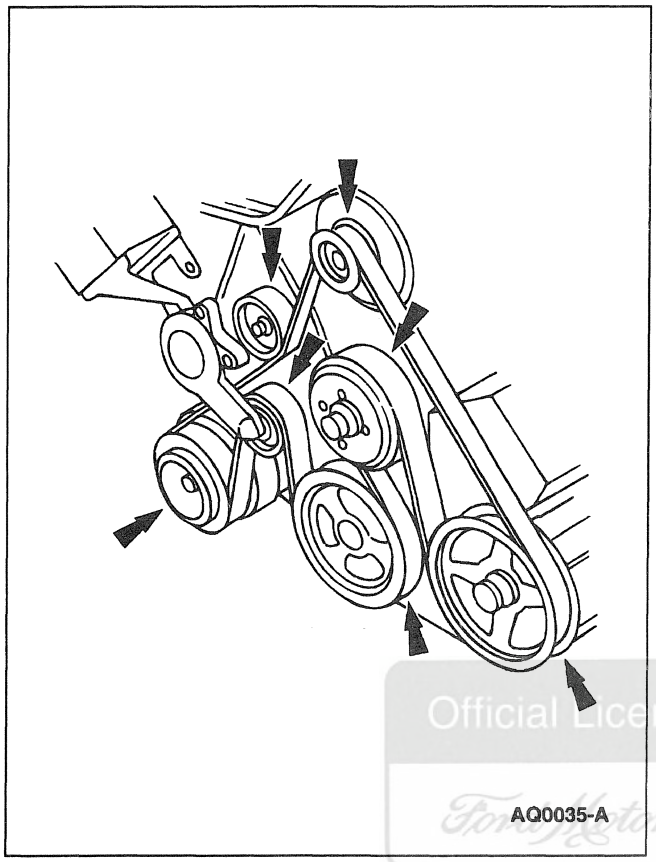

1. **NOTE:** Refer to the drive belt routing illustration for drive belt alignment.

   Follow the removal procedure in reverse order.

Official Licensed Product
Ford Motor Company

Belt Tensioner — Automatic

Removal

1. Remove the drive belt (8620); refer to Belt—Drive in this section.

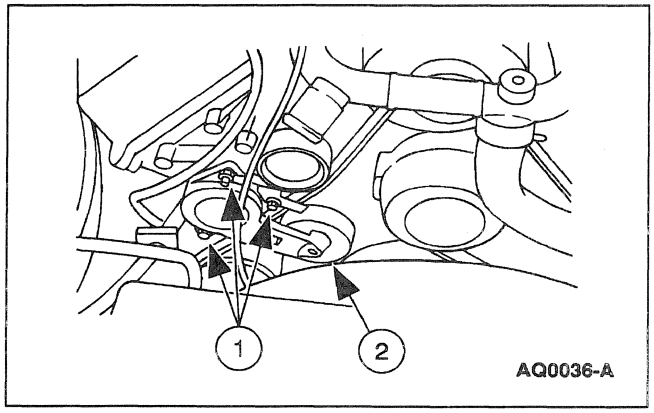

2. Remove the drive belt tensioner (6B209).
   1 Remove the bolts from the drive belt tensioner.
   2 Remove the drive belt tensioner from the vehicle.

REMOVAL AND INSTALLATION (Continued)

Installation

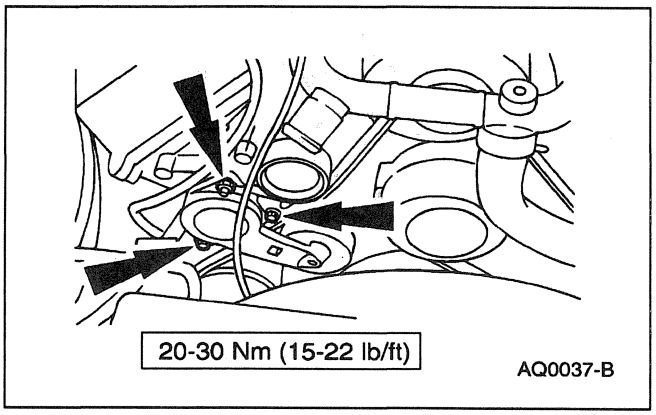

1. Follow the removal procedure in reverse order.

GENERAL PROCEDURES

Belt Adjustment

NOTE: The drive belt tensioner indicator mark inspection is done with the engine off at 160,000 km (100,000 mile) intervals.

Official Licensed Product
Ford Motor Company

1. Automatic drive belt tensioners are spring-loaded devices which set and maintain the drive belt tension. The drive belt should not require tension adjustment for the life of the drive belt. The drive belt is worn or an incorrect drive belt has been installed if the tab is resting against a stop.

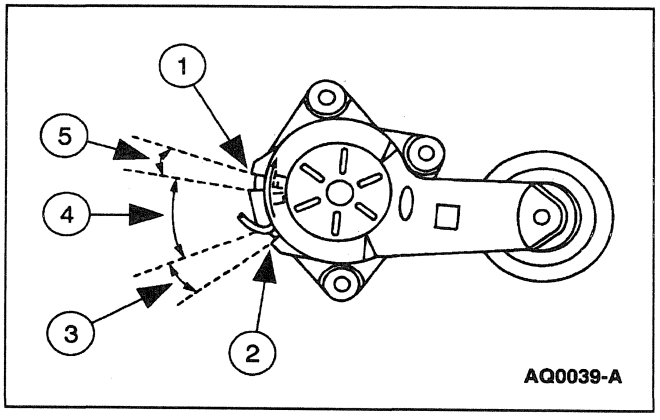

2. Locate the tab on the mounting plate of the drive belt tensioner. The tab should be approximately between the stops of the drive belt tensioner arm.
   - 1 Stop
   - 2 Stop
   - 3 Tab in this area, belt length is incorrect. Replace belt.
   - 4 Tab in this area, belt OK.
   - 5 Tab in this area, belt worn or incorrect length. Replace belt.

SPECIFICATIONS

Torque Specifications

Description	Nm	Lb/Ft
Drive Belt Tensioner Retaining Bolts	20-30	15-22

Official Licensed Product
Ford Motor Company

SECTION 303-06 Starting System

VEHICLE APPLICATION: Mark VIII

SUBJECT	PAGE
DESCRIPTION AND OPERATION	
Starting System	303-06-2
DIAGNOSIS AND TESTING	
Starting System	303-06-5
Component Tests	303-06-24
Individual Cable	303-06-26
Motor Feed Circuit	303-06-25
Motor Ground Circuit	303-06-26
Voltage Drop Tests	303-06-25
Inspection and Verification	303-06-6
Pinpoint Tests	303-06-11
Symptom Chart	303-06-10
REMOVAL AND INSTALLATION	
Starter Motor	303-06-27
GENERAL PROCEDURES	
Starter Drive/Flywheel Ring Gear Inspection	303-06-28
SPECIFICATIONS	303-06-29

Official Licensed Product
Ford Motor Company

DESCRIPTION AND OPERATION

Starting System

Component Locations

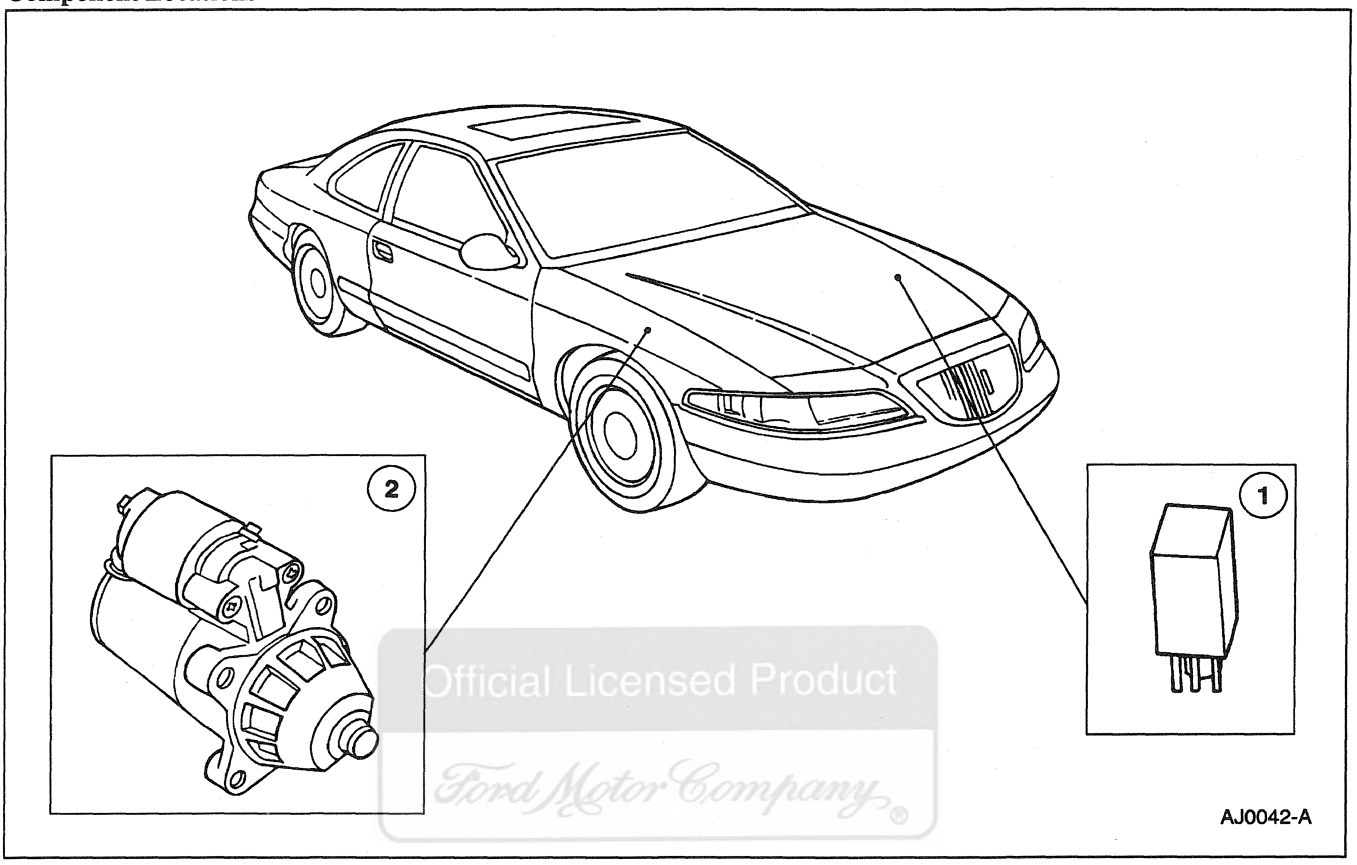

Official Licensed Product
Ford Motor Company

Item	Part Number	Description
1	14B192	Starter Interrupt Relay
2	11002	Starter Motor

DESCRIPTION AND OPERATION (Continued)

Starter Motor Components

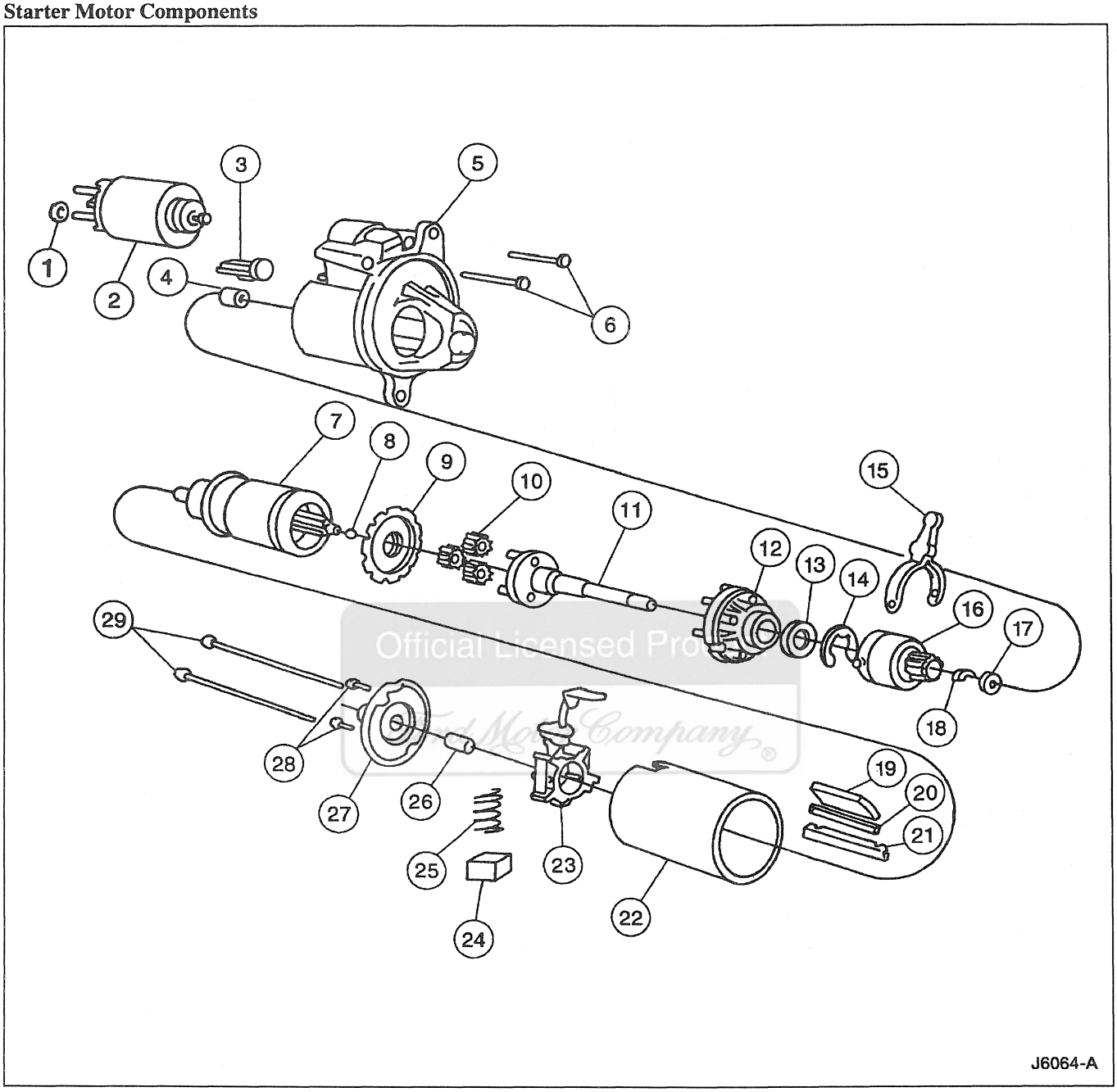

Item	Part Number	Description
1	N805403	M-Terminal Nut
2	11390	Starter Solenoid
3	11A171	Seal
4	—	Bushing
5	11130	Drive End Housing
6	N805405	Solenoid Bolts (2 Req'd)
7	11005	Starter Motor Armature

(Continued)

Item	Part Number	Description
8	11A172	Armature Thrust Ball
9	11A167	Planet Gear Retainer
10	11K190	Planet Gear
11	11355	Output Shaft
12	11A165	Stationary Gear
13	11036	Pinion Thrust Washer
14	N805404	E-Ring

(Continued)

DESCRIPTION AND OPERATION (Continued)

Item	Part Number	Description
15	11067	Drive Lever and Pin
16	11350	Starter Drive
17	11223	Stop Ring Retainer
18	11222	Starter Drive Stop Ring
19	—	Magnet Pole Piece (Part of 11075)
20	—	Pole Shunt (Part of 11075)
21	—	Magnet Retainer (Part of 11075)

(Continued)

Item	Part Number	Description
22	11075	Starter Frame and Magnet
23	11434	Brush Holder
24	11057	Brush Set
25	11059	Brush Springs
26	—	Bushing
27	11050	Brush End Plate and Bushing
28	N805406	Brush Plate Bolts (2 Req'd)
29	N805428	Through Bolts (2 Req'd)

The starting system cranks the engine at a speed fast enough to permit the engine to start.

- Heavy cables, connectors and switches are used because of the large current required by the starter motor (11002) while it cranks the engine.
- The amount of resistance in the starting circuit must be kept to a minimum to provide maximum current for starter motor operation.
- A discharged or damaged battery (10653) , loose or corroded connections or partially broken cables will cause slower than normal cranking speeds and may prevent the starter motor from cranking the engine.

For starting system concerns:

- The operator may have discharged the battery before calling for assistance.

The starting system includes:

- the permanent magnet gear-reduction starter motor with a solenoid-actuated drive
- the battery
- the ignition switch (11572))
- the transmission range (TR) sensor
- starter interrupt relay (14N089)
- heavy circuit wiring
- a starter solenoid (11390)
- the steering column/ignition/lighting control module

The transmission range (TR) sensor prevents operation of the starter motor unless the selector lever is in the NEUTRAL or PARK position.

Starter Motor

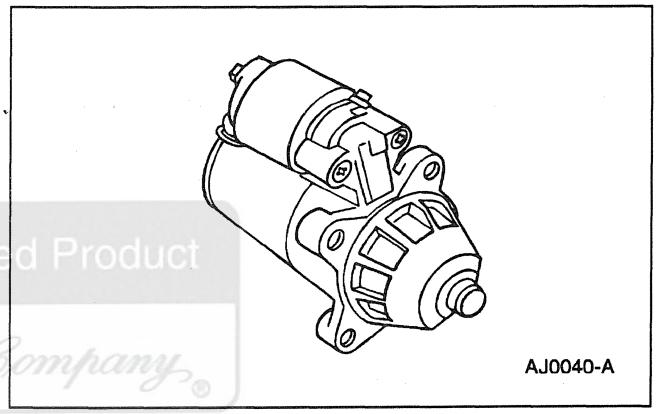

The starter motor is a 12-volt unit that has the starter solenoid mounted on the drive end housing.

- The motor is energized when the starter solenoid contacts are closed.
- This engages the starter drive (11350) with the flywheel ring gear, starting the engine.
- An overrunning clutch in the starter drive protects the starter motor from excessive speed when the engine starts.
- The current flows through the solenoid energizing coil until the solenoid plunger is at the end of its travel.
- The plunger then closes a set of contacts that bypass the energizing coil.
- The holding coil keeps the starter drive engaged and passes starting current to the starter motor.

Official Licensed Product Motorcraft Company

DESCRIPTION AND OPERATION (Continued)

Starter Interrupt Relay

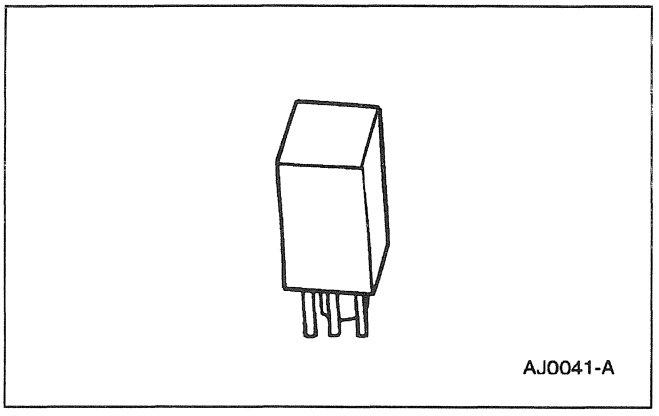

The starter interrupt relay consists of:

- pull-in coil
- contacts

When the ignition switch is in the START position:

- pull-in coil is activated by the steering column/ignition/lighting control module and pulls the contacts together
- current passes through the starter interrupt relay from the engine compartment power distribution box to the starter solenoid

Sequence of Operation

1. Battery positive voltage is constantly supplied to the starter interrupt relay normally open contact through the power distribution box maxifuse 27 (30A).
2. The ignition switch is turned to START, sending a start signal to the steering column/ignition/lighting control module and supplying voltage to the high side of the starter interrupt relay coil through fuse junction panel Fuse 6 (10A).
3. The steering column/ignition/lighting control module will ground the coil of the starter interrupt relay if:
   - the keycode matches the code stored in memory; refer to Section 419-01B for more information.
   - the engine rpm does not exceed 200 rpm.
   - the digital transmission range (TR) sensor is in PARK or NEUTRAL.
4. A magnetic field is created in the starter interrupt relay, closing the contact points and supplying voltage to the starter solenoid.
5. The iron plunger core is drawn into the solenoid coil.
6. A lever connected to the starter drive engages the drive pinion gear to the flywheel ring gear.
7. When the iron plunger core is all the way into the coil, its contact disc closes the circuit between the battery and the starter motor terminals.
8. The current flows to the motor and the starter drive cranks the flywheel (6375) and the crankshaft (6303).
9. As current flows to the motor, the solenoid pull-in coil is bypassed.
10. The hold-in coil keeps the starter drive engaged with the flywheel .
11. The starter drive remains engaged until the ignition switch is released from the START position.

An overrunning clutch in the starter drive protects the starter motor from excessive speeds during the brief period before the driver releases the ignition switch from the START position (as the engine starts).

Official Licensed Product
Ford Motor Company

DIAGNOSIS AND TESTING

Starting System

Refer to Electrical and Vacuum Troubleshooting Manual, Cell 20, Starting System for schematic and connector information.

DIAGNOSIS AND TESTING (Continued)

Refer to Electrical and Vacuum Troubleshooting Manual, Cell 58, Lighting Control Module for schematic and connector information.

Special Tool(s)

ST1137-A	73 Digital Multimeter 105-R0051 or equivalent
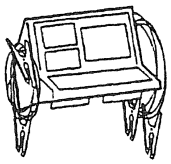 ST1179-A	Alternator, Regulator, Battery and Starter Tester (ARBST) 010-00725 or equivalent
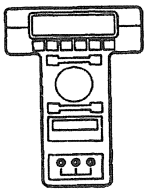 ST1217-A	New Generation Star (NGS) Tester 418-F048 (007-00500) or equivalent

Inspection and Verification

1. **WARNING: WHEN SERVICING STARTER MOTOR (11002) OR PERFORMING OTHER UNDERHOOD WORK IN THE AREA OF THE STARTER MOTOR, BE AWARE THAT THE HEAVY GAUGE BATTERY INPUT LEAD AT THE STARTER SOLENOID (11390) IS "ELECTRICALLY HOT" AT ALL TIMES. A PROTECTIVE CAP OR BOOT IS PROVIDED OVER THIS TERMINAL THAT MUST BE REPLACED AFTER SERVICING. BE SURE TO DISCONNECT BATTERY GROUND CABLE (14301) BEFORE SERVICING STARTER.**

   WARNING: WHEN WORKING IN AREA OF THE STARTER MOTOR, BE CAREFUL TO AVOID TOUCHING HOT EXHAUST COMPONENTS.

   Verify the customer's concern by operating the starter system to duplicate the concern.

2. Inspect to determine if any of the following mechanical or electrical concerns apply:

Visual Inspection Chart

Mechanical	Electrical
• Starter motor mounting misaligned • Flywheel ring gear tooth damage	• Connections loose, damaged or shorting • Damaged battery • Damaged Fuse — Power Distribution Box Fuse 27 (30A) — Fuse Junction Panel Fuse 5 (10A), Fuse 6 (10A) — Fuse 2 (15A), Fuse 19 (10A), Fuse 26 (15A), Fuse 1 (10A), Fuse 25 (10A), Fuse 13 (15A), Fuse 7 (15A), Fuse 12 (15A) and Fuse 31 (10A)

3. If inspection reveals obvious concern(s) that can be readily identified, repair as required.
4. If concern remains after the inspection, use the Rotunda New Generation Star (NGS) Tester connected to the data link connector (DLC) to perform Data Link Diagnostic Test; refer to Section 418-00. If after performing Data Link Diagnostic Test, the NGS responds with NO RESPONSE/NOT EQUIPPED for steering column/ignition/lighting control module, go to Pinpoint Test A. If the Data Link Diagnostic Test passes, retrieve continuous diagnostic trouble codes (DTCs) and execute self-test diagnostics for steering column/ignition/lighting control module; refer to Section 418-00.
5. If self-test is passed and no diagnostic trouble codes (DTCs) are retrieved, go to the Symptom Chart to continue diagnostics.
6. If diagnostic trouble codes (DTCs) are retrieved, go to the Steering Column/Ignition/Lighting Control (SCIL) Module Diagnostic Trouble Code (DTC) Index to continue diagnostics.

Official Licensed Publication
Ford Motor Company

DIAGNOSIS AND TESTING (Continued)

STEERING COLUMN/IGNITION/LIGHTING CONTROL (SCIL) MODULE DIAGNOSTIC TROUBLE CODE (DTC) INDEX

DTC	Description	DTC caused by	Action to Take
C1446	Brake Switch Circuit Failure	SCIL	GO to Section 206-05.
B1246	Panel Dim Potentiometer Switch Circuit Failure	SCIL	GO to Section 417-02.
B1312	Lamp Headlamp Input Circuit Short to Battery	SCIL	GO to Section 417-01.
B1334	Luggage Compartment Door Ajar Circuit Short to Ground	SCIL	GO to Section 417-02.
B1342	ECU Defective	SCIL	GO to Section 417-01.
B1353	Ignition Key-In Circuit Open	SCIL	GO to Section 501-12.
B1360	Ignition RUN/ACC Circuit Open	SCIL	GO to Section 501-12.
B1364	Ignition START Circuit Open	SCIL	GO to Section 501-12.
B1446	Wiper Park Sense Circuit Failure	SCIL	GO to Section 417-01.
B1509	Flash-to-Pass Switch Circuit Short to Battery	SCIL	GO to Section 417-01.
B1522	Hood Switch Circuit Short to Ground	SCIL	GO to Section 419-01A.
B1562	Door Lock Cylinder Circuit Short to Ground	SCIL	GO to Section 419-01A.
B1566	Door Ajar Circuit Short to Ground	SCIL	GO to Section 417-02.
B1600	PATS Ignition Key Transponder Signal Is Not Received	SCIL	GO to Section 419-01B.
B1601	PATS Received Incorrect Key Code from Ignition Key Transponder	SCIL	GO to Section 419-01B.
B1676	Battery Voltage Out of Range	SCIL	GO to Section 417-01.
B1682	PATS is Disabled (Check Link Between PATS and Transponder)	SCIL	GO to Section 419-01B.
B1687	Dome Lamp Input Circuit Short to Battery	SCIL	GO to Section 417-02.
B1689	Autolamp Delay Circuit Failure	SCIL	GO to Section 417-01.
B1796	Headlamp Low Beam Circuit Short to Battery	SCIL	GO to Section 417-01.
B1875	Turn Signal/Hazard Switch Signal Circuit Short to Battery	SCIL	GO to Section 417-01.
B1980	Bulb Outage Condition Detected	SCIL	GO to Section 417-01.
B2328	Steering Column Reach Feedback Potentiometer Circuit Failure	SCIL	GO to Section 211-05.
B2332	Steering Column Tilt Feedback Potentiometer Circuit Failure	SCIL	GO to Section 211-05.
B2351	Steering Column Switch Signal Circuit Failure	SCIL	GO to Section 211-05.
U1027	SCP Invalid or Missing Data for Engine RPM	PCM	REFER to Powertrain Control/Emissions Diagnosis Manual [1].
U1041	SCP Invalid or Missing Data for Vehicle Speed	ABS	GO to Section 206-09, Inspection and Verification to continue diagnosis.
U1057	SCP Invalid or Missing Data for Vehicle Configuration	SCIL	GO to Section 417-01, Inspection and Verification to continue diagnosis.

(Continued)

Official Licensed Product Ford Motor Company

1 Can be purchased as a separate item.

DIAGNOSIS AND TESTING (Continued)

STEERING COLUMN/IGNITION/LIGHTING CONTROL (SCIL) MODULE DIAGNOSTIC TROUBLE CODE (DTC) INDEX

DTC	Description	DTC caused by	Action to Take
U1059	SCP Invalid or Missing Data for Transmission/Transaxle/PRNDL	PCM	REFER to Powertrain Control/Emissions Diagnosis Manual [2].
U1123	SCP Invalid or Missing Data for Odometer	ABS	GO to Section 206-09, Inspection and Verification to continue diagnosis.
U1147	SCP Invalid or Missing Data for Vehicle Security	PCM	PERFORM J1850 Communication Network Diagnostics. GO to Communication Network Diagnostics in Section 418-00.
U1180	SCP Invalid or Missing Data for Personalization (Memory) Features	DDM	GO to Section 501-09, Inspection and Verification to continue diagnosis.
U1181	SCP Invalid or Missing Data for Personalization (Memory) Features	DDM	GO to Section 501-09, Inspection and Verification to continue diagnosis.
U1197	SCP Invalid or Missing Data for Door Locks	DDM	GO to Section 501-14B, Inspection and Verification to continue diagnosis.
U1198	SCP Invalid or Missing Data for External Access (Doors)	DDM	GO to Section 501-14B, Inspection and Verification to continue diagnosis.
U1199	SCP Invalid or Missing Data for External Access (Doors)	DDM	GO to Section 417-02, Inspection and Verification to continue diagnosis.
U1211	SCP Invalid or Missing Data for Restraints	DSM	GO to Section 413-08, Inspection and Verification to continue diagnosis.
U1222	SCP Invalid or Missing Data for Interior Lamps	DDM	GO to Section 501-14B, Inspection and Verification to continue diagnosis.

STEERING COLUMN/IGNITION/LIGHTING CONTROL (SCIL) MODULE PARAMETER IDENTIFICATION INDEX

PID	Description	PID Value
CCNTSCI	Number of Continuous DTCs on SCIL	one count per bit
BOO__SCI	Brake Switch Input	ON OFF
PARK__BRK	Parking Brake Switch Input	ON OFF
TILT	Steering Column Tilt Switch	SHORT UP DOWN OFF
TELESCP	Steering Column Telescope Switch	SHORT IN OUT OFF
TILTPOS	Tilt Position Sensor	SENSED notSEN
TELEPOS	Telescope Position Sensor	SENSED notSEN
TURN__SW	Left and Right Turn Signal Switch	OFF LEFT RIGHT SHORT
LBEAMSW	Low Beam Switch	ON OFF

(Continued)

STEERING COLUMN/IGNITION/LIGHTING CONTROL (SCIL) MODULE PARAMETER IDENTIFICATION INDEX

PID	Description	PID Value
HBEAMSW	High Beam Switch	ON OFF
PARK__SW	Parking Switch	ON OFF
LIGHTSN	Ambient Light	DAY NIGHT
FLASH	Flash to Pass Switch	ON OFF
FTURN__L	Left and Right Front Turn Lamp	R__OPEN, L__OPEN, L/R__OPEN OK
RTURN__L	Left and Right Rear Turn Lamp	R__OPEN, L__OPEN, L/R__OPEN OK
TAILLMP	Left and Right Tail Lamp	OPEN OK
LOWBEAM	Low Beam Lamp	R__OPEN, L__OPEN, L/R__OPEN OK
AUTOLMP	Autolamp Switch	ON OFF

(Continued)

2 Can be purchased as a separate item.

DIAGNOSIS AND TESTING (Continued)

STEERING COLUMN/IGNITION/LIGHTING CONTROL (SCIL) MODULE PARAMETER IDENTIFICATION INDEX

PID	Description	PID Value
ALP__IMP	Autolamp Analog Input	0-100%
DOMESW	Dome Lamp Switch	ACTIVE notACT
PANLDIM	Panel Dim Intensity Switch	0-100%
HOOD__SW	Hood Ajar Switch	AJAR CLOSED
DECKLID	Decklid Ajar Switch	AJAR CLOSED
P__DR__SW	Passenger Door Ajar Switch	AJAR CLOSED
IGN__KEY	Ignition Key In/Out	IN OUT
IGN__SCI	Ignition Switch	START RUN OFF ACCSSY
WPPRKSW	Windshield Wiper Park Sense	notPRK PARKED
NUMKEYS	Number of Ignition Key Codes Supported	BCD (valid range 0-16)
DRLKCYL	Door Lock Cylinder	ON OFF
ENABLE	PATS System Status	ON OFF
FAILSAF	PATS System Status	ON OFF

STEERING COLUMN/IGNITION/LIGHTING (SCIL) CONTROL MODULE ACTIVE COMMAND INDEX

Active Command	Display	Function
PID Latch	PID LATCH	ON OFF
One Touch Window Dwn and Accy Delay	ACCY RLY	ON OFF
Warning Lamps and Chime	CHIME	ON OFF
	ANTI-THEFT	ON OFF
	AUTOLMP	ON OFF

(Continued)

STEERING COLUMN/IGNITION/LIGHTING (SCIL) CONTROL MODULE ACTIVE COMMAND INDEX

Active Command	Display	Function
	HIGH BEAM	ON OFF
Interior Courtesy Lamps	INT LAMPS	ON OFF
	MIRRORLAMP	ON OFF
Decklid Release	RELEASE	ON OFF
Turn Signal and Marker Lamps	LF TURN	ON OFF
	RF TURN	ON OFF
	LR TURN	ON OFF
	RR TURN	ON OFF
	PARKLAMPS	ON OFF
Headlamp Control	LEFT LOW	ON OFF
	RIGHT LOW	ON OFF
	HIGH BEAM	ON OFF
	DRUN LAMP	ON OFF
	LF CORNER	ON OFF
	RF CORNER	ON OFF
Horn Control	HORN	ON OFF
Backlighting Intensity	INTENSITY	0%-100%
Courtesy Lamp Intensity	INTENSITY	0%-100%
Door Ajar Signal	DOOR AJAR	ON OFF
Transmit Signal Command	TRANSMIT	ON OFF
Brake System	BRK/SHIFT	ON OFF
	PARK BRK	ON OFF
Steering Column Control	TILT UP	ONE SECOND TIME OUT
	TILT DOWN	ONE SECOND TIME OUT
	TELSCP IN	ONE SECOND TIME OUT
	TELSCPOUT	ONE SECOND TIME OUT
Keycode Erase Time Set	MINUTES	8-63 MINUTES

Official Licensed Product Ford Motor Company

DIAGNOSIS AND TESTING (Continued)

Symptom Chart

SYMPTOM CHART

Condition	Possible Source	Action
• No Communication With The Steering Column/Ignition/Lighting (SCIL) Control Module	• Steering column/ignition/lighting control module. • Circuitry.	• GO to Pinpoint Test A.
• The Engine Does Not Crank or The Relay Does Click	• Low battery. • Open fuse. • Open ignition switch. • Shorts to ground. • Engine system. • Inoperative starter motor. • High resistance in battery feed to starter solenoid B+ or S terminals or ground circuit. • Starter interrupt relay, if incorporated.	• GO to Pinpoint Test B.
• The Engine Cranks Slowly	• Low battery. • Ground not secure. • Connections loose. • Inoperative starter motor. • Shorted fuse or ignition switch. • High resistance in battery feed to starter solenoid B+ or ground circuit. • Ring gear runout is excessive.	• GO to Pinpoint Test C.
• Unusual Starter Noise	• Starter motor. • Worn or damaged flywheel ring gear tooth, damage or excessive ring gear runout. • Inoperative components.	• GO to Pinpoint Test D.

Ford Motor Company

DIAGNOSIS AND TESTING (Continued)

Pinpoint Tests

PINPOINT TEST A: NO COMMUNICATION WITH THE STEERING COLUMN/IGNITION/LIGHTING (SCIL) CONTROL MODULE

TEST CONDITIONS	TEST DETAILS/RESULTS/ACTIONS
A1 CHECK CIRCUIT 875 (BK/LB) FOR AN OPEN	
1 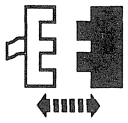 Steering Column/Ignition/Lighting Control Module Connector C288 2 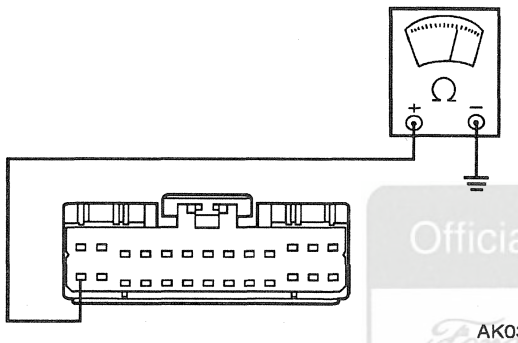 AK0313-B	2 Connect an ohmmeter between the steering column/ignition/lighting control module connector Pin C288-14, Circuit 875 (BK/LB) and ground. • Is the resistance reading 5 ohms or less? → **Yes** GO to **A2.** → **No** REPAIR Circuit 875 (BK/LB) for an open. RESTORE the vehicle. REPEAT the steering column/ignition/lighting control module self test.
A2 CHECK CIRCUIT 57 (BK) FOR AN OPEN	
1 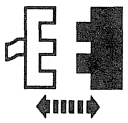 Steering Column/Ignition/Lighting Control Module Connector C287 2 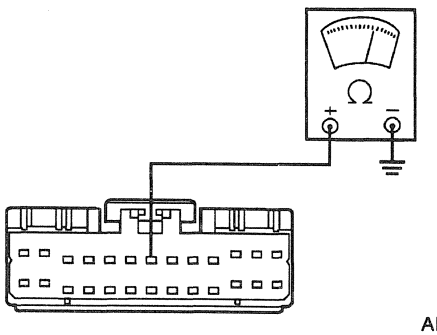 AK0314-B	2 Connect an ohmmeter between the steering column/ignition/lighting control module connector Pin C287-7, Circuit 57 (BK) and ground. • Is the resistance reading 5 ohms or less? → **Yes** GO to **A3.** → **No** REPAIR Circuit 57 (BK) for an open. RESTORE the vehicle. REPEAT the steering column/ignition/lighting control module self test.

(Continued)

Official Licensed Product Ford Motor Company

DIAGNOSIS AND TESTING (Continued)

PINPOINT TEST A: NO COMMUNICATION WITH THE STEERING COLUMN/IGNITION/LIGHTING (SCIL) CONTROL MODULE (Continued)

TEST CONDITIONS	TEST DETAILS/RESULTS/ACTIONS
A3 CHECK FOR B+ SUPPLY ON THE STEERING COLUMN/IGNITION/LIGHTING CONTROL MODULE CONNECTOR C287	
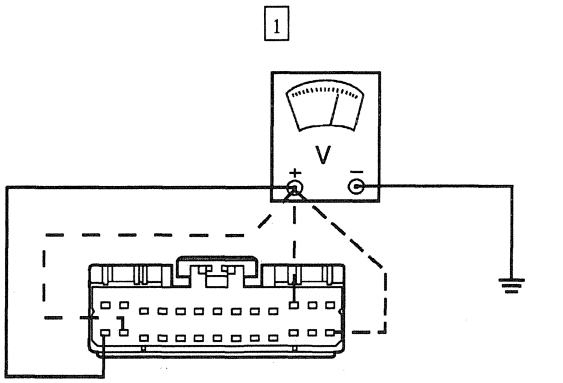 AK1260-A	[1] Connect a voltmeter to each of the following steering column/ignition/lighting control module connector C287 Pins. Note the voltage reading at each pin: • C287-14, Circuit 906 (R/O) • C287-26, Circuit 19 (LB/R) • C287-15, Circuit 1055 (W/LG) • C287-11, Circuit 1056 (DB/LG) • Is the voltage reading on any circuit B+? → **Yes** GO to Communication Network Diagnostics in Section 418-00 to diagnose network concern. → **No** For each suspect circuit, REFER to the Electrical Vacuum and Troubleshooting Manual, Cell 58, Lighting Control Module and Cell 11, Circuit Protection/Fuse Panel to identify the subsystem in need of repair. REPAIR as required. GO to **A4**.

Official Licensed Product
Ford Motor Company

(Continued)

DIAGNOSIS AND TESTING (Continued)

PINPOINT TEST A: NO COMMUNICATION WITH THE STEERING COLUMN/IGNITION/LIGHTING (SCIL) CONTROL MODULE (Continued)

TEST CONDITIONS	TEST DETAILS/RESULTS/ACTIONS
A4 CHECK FOR B+ SUPPLY ON THE STEERING COLUMN/IGNITION/LIGHTING CONTROL MODULE CONNECTOR C289	
1 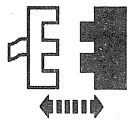 Steering Column/Ignition/Lighting Control Module Connector C289 2 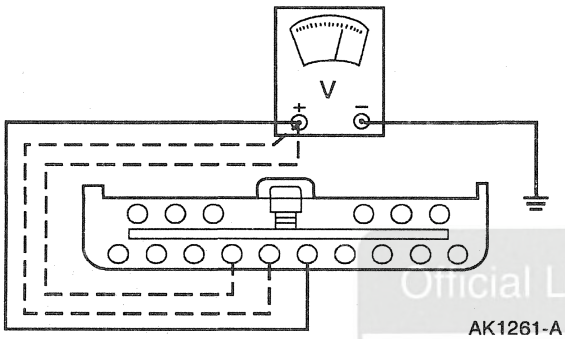 AK1261-A	2 Connect a voltmeter to each of the following steering column/ignition/lighting control module connector C289 Pins. Note the voltage reading at each pin: • C289-5, Circuit 1058 (BR/W) • C289-6, Circuit 1057 (O/BK) • C289-7, Circuit 908 (PK/LG) • Is the voltage reading on any circuit B+? → **Yes** GO to Communication Network Diagnostics in Section 418-00 to diagnose network concern. → **No** For each suspect circuit, REFER to the Electrical Vacuum and Troubleshooting Manual, Cell 58, Lighting Control Module and Cell 11, Circuit Protection/Fuse Panel to identify the subsystem in need of repair. REPAIR as required. RESTORE the vehicle. REPEAT the steering column/ignition/lighting control module self test.

PINPOINT TEST B: THE ENGINE DOES NOT CRANK OR THE RELAY DOES CLICK

TEST CONDITIONS	TEST DETAILS/RESULTS/ACTIONS
B1 CHECK FOR VOLTAGE AT STARTER	
1 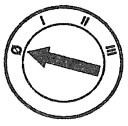 2 	3 Raise the vehicle on hoist; refer to Section 100-02.

(Continued)

DIAGNOSIS AND TESTING (Continued)

PINPOINT TEST B: THE ENGINE DOES NOT CRANK OR THE RELAY DOES CLICK (Continued)

TEST CONDITIONS	TEST DETAILS/RESULTS/ACTIONS
B1 CHECK FOR VOLTAGE AT STARTER (Continued)	
4 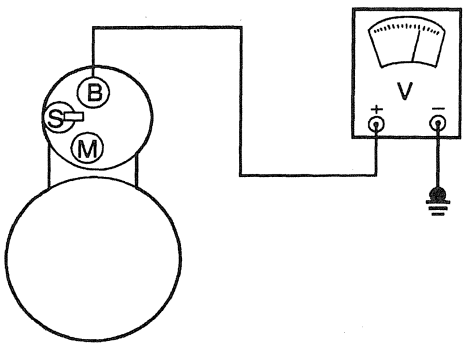 AJ0031-A	4 **NOTE:** Remove plastic safety cap on starter solenoid and connector at starter solenoid S terminal. Connect a voltmeter to starter B+ terminal. • Is voltage 11 volts or more? → **Yes** GO to **B2.** → **No** CHECK the wire connections between battery and starter solenoid. If no concerns are noticed, REFER to Section 414-00 and CHECK battery charging system.
B2 MANUALLY CRANK STARTER	
1 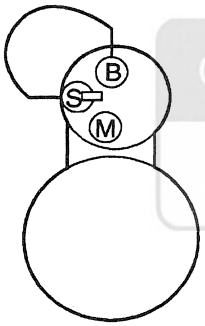 AJ0032-A	1 Connect a jumper wire to the B+ starter terminal and momentarily touch the other end to starter solenoid S terminal. • Does the starter motor crank and crank quickly? → **Yes** RESTORE the starter connections. GO to **B3.** → **No** REPLACE the starter motor. TEST the system for normal operation.
B3 CHECK THE STEERING COLUMN/IGNITION LIGHTING CONTROL MODULE FOR START INPUT	
1 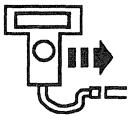 New Generation Star (NGS) Tester 2 Read Steering Column/Ignition/Lighting Control Module PID IGN__SCI 3 	• Does PID IGN__SCI read START? → **Yes** GO to **B4.** → **No** REFER to Section 501-12 for ignition switch diagnostics. TEST the starter system.

(Continued)

Official Licensed Product
Ford Motor Company

DIAGNOSIS AND TESTING (Continued)

PINPOINT TEST B: THE ENGINE DOES NOT CRANK OR THE RELAY DOES CLICK (Continued)

TEST CONDITIONS	TEST DETAILS/RESULTS/ACTIONS
B4 CHECK THE STEERING COLUMN/IGNITION/LIGHTING CONTROL MODULE	
1 2 3 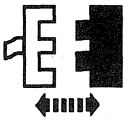 Steering Column/Ignition/ Lighting Control Module Connector C287	
4 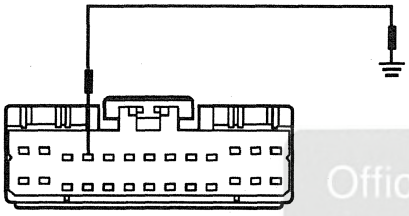 AJ0033-B	4 Using a jumper wire connected to ground, connect the other end to steering column/ignition/lighting control module connector Pin C287-4, Circuit 33 (W/PK).
5	• Does the starter crank? → **Yes** REPLACE the steering column/ignition/lighting control module. TEST the system for normal operation. → **No** GO to **B5**.

Official Licensed Product
Ford Motor Company

(Continued)

DIAGNOSIS AND TESTING (Continued)

PINPOINT TEST B: THE ENGINE DOES NOT CRANK OR THE RELAY DOES CLICK (Continued)

TEST CONDITIONS	TEST DETAILS/RESULTS/ACTIONS
B5 CHECK CIRCUIT 37 (Y) FOR OPEN	
1 Starter Relay 2 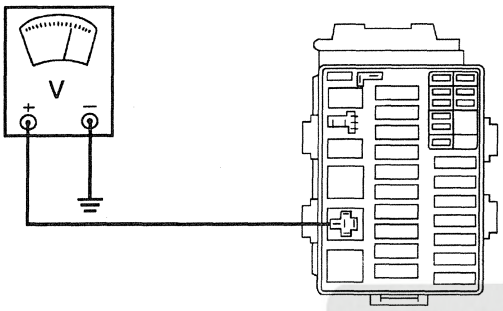 AJ0034-B	2 Connect a voltmeter between starter relay connector Pin C1028-30, Circuit 37 (Y) and ground. • Is the voltage reading B+? → **Yes** GO to **B6**. → **No** REPAIR open in Circuit 37 (Y). TEST the system for normal operation.
B6 CHECK FOR VOLTAGE AT STARTER RELAY PIN 86, CIRCUIT 655 (R/O)	
1 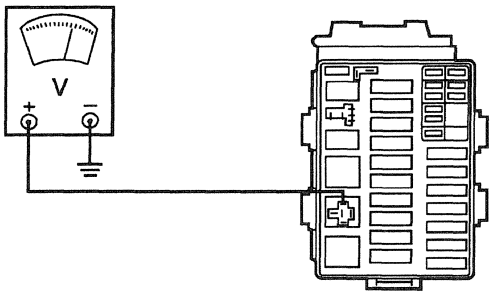 AJ0035-B 2 	1 Connect a voltmeter between starter relay connector Pin C1028-86, Circuit 655 (R/O) and ground. 2 Turn the ignition switch to START and observe reading. • Is the voltage reading B+? → **Yes** GO to **B11**. → **No** GO to **B7**.

(Continued)

Official Licensed Product Ford Motor Company

DIAGNOSIS AND TESTING (Continued)

PINPOINT TEST B: THE ENGINE DOES NOT CRANK OR THE RELAY DOES CLICK (Continued)

TEST CONDITIONS	TEST DETAILS/RESULTS/ACTIONS
B7 CHECK FUSE 6 (10A)	
1 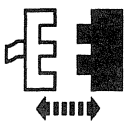 Fuse Junction Panel Fuse 6 (10A) 2 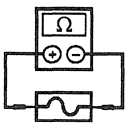 Fuse Junction Panel Fuse 6 (10A)	• Is fuse OK? → **Yes** GO to **B8**. → **No** REPAIR Circuit 655 (R/O) short to ground. TEST the system for normal operation.
B8 CHECK FUSE 6 (10A) INPUT	
2 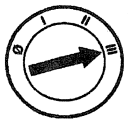	1 Connect a voltmeter to the input cavity of the fuse junction panel, Fuse 6 (10A), Circuit 1000 (R/BK).

Official Licensed Product
Ford Motor Company

(Continued)

DIAGNOSIS AND TESTING (Continued)

PINPOINT TEST B: THE ENGINE DOES NOT CRANK OR THE RELAY DOES CLICK (Continued)

TEST CONDITIONS	TEST DETAILS/RESULTS/ACTIONS
B8 CHECK FUSE 6 (10A) INPUT (Continued)	
3 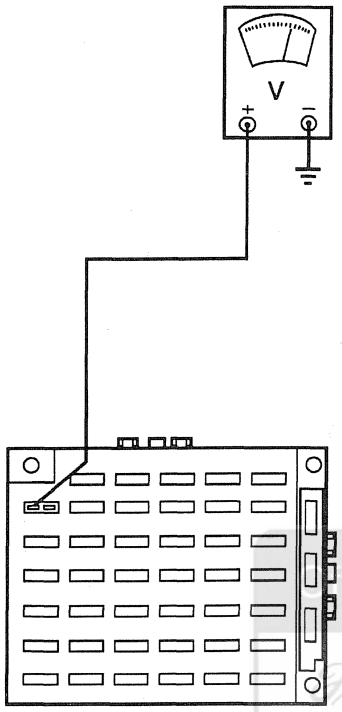 AJ0134-A	• Is the voltage reading B+? → **Yes** REPAIR Circuit 655 (R/O) for open. TEST the system for normal operation. → **No** GO to **B9**.

Official Licensed Product
Ford Motor Company

(Continued)

DIAGNOSIS AND TESTING (Continued)

PINPOINT TEST B: THE ENGINE DOES NOT CRANK OR THE RELAY DOES CLICK (Continued)

TEST CONDITIONS	TEST DETAILS/RESULTS/ACTIONS
B9 CHECK IGNITION SWITCH	
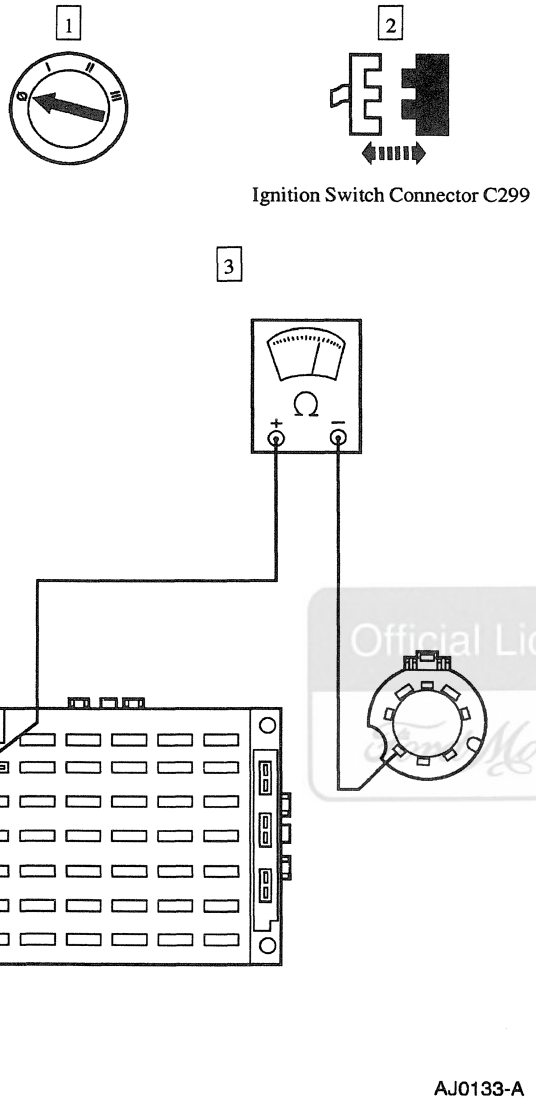	3 Connect an ohmmeter between the ignition switch connector Pin C299-3 and the input cavity of the fuse junction panel, Fuse 6 (10A), Circuit 1000 (R/BK). • Is the resistance 5 ohms or less? → **Yes** GO to **B10**. → **No** REPAIR Circuit 1000 (R/BK) for an open. TEST the system for normal operation.

Official Licensed Product Ford Motor Company

(Continued)

DIAGNOSIS AND TESTING (Continued)

PINPOINT TEST B: THE ENGINE DOES NOT CRANK OR THE RELAY DOES CLICK (Continued)

TEST CONDITIONS	TEST DETAILS/RESULTS/ACTIONS
B10 CHECK CIRCUIT 1000 (R/BK) FOR SHORT TO GROUND	
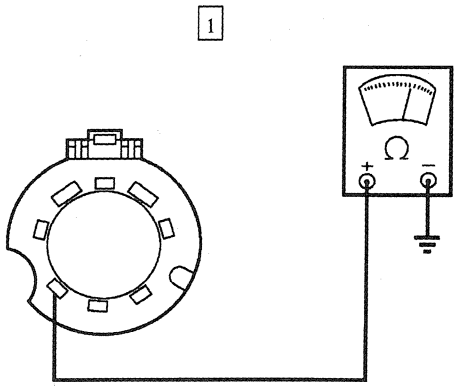 AJ0135-A	1 Connect an ohmmeter between the ignition switch connector Pin C299-3, Circuit 1000 (R/BK) and ground. • Is the resistance 10 K ohms or less? → **Yes** REPAIR Circuit 1000 (R/BK) for a short to ground. TEST the system for normal operation. → **No** REPLACE the ignition switch. TEST the system for normal operation.
B11 CHECK CIRCUIT 113 (Y/LB) FOR OPEN	
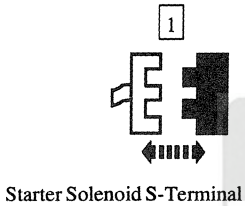 Starter Solenoid S-Terminal Connector 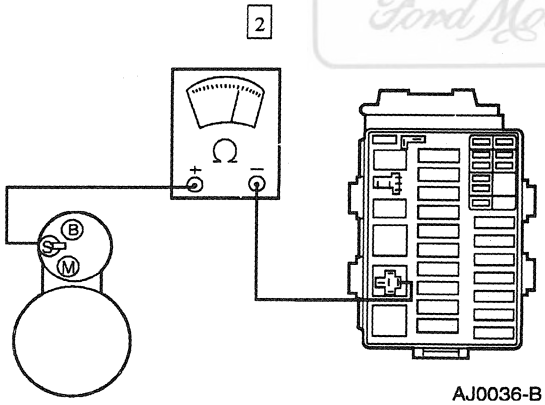 AJ0036-B	2 Connect an ohmmeter between starter relay connector Pin C1028-87, Circuit 113 (Y/LB) and starter solenoid S terminal connector. • Is the resistance 5 ohms or less? → **Yes** GO to **B12**. → **No** REPAIR Circuit 113 (Y/LB) for an open. TEST the system for normal operation.

Official Licensed Product
Ford Motor Company

(Continued)

DIAGNOSIS AND TESTING (Continued)

PINPOINT TEST B: THE ENGINE DOES NOT CRANK OR THE RELAY DOES CLICK (Continued)

TEST CONDITIONS	TEST DETAILS/RESULTS/ACTIONS
B12 CHECK CIRCUIT 113 (Y/LB) FOR SHORT TO GROUND	
1 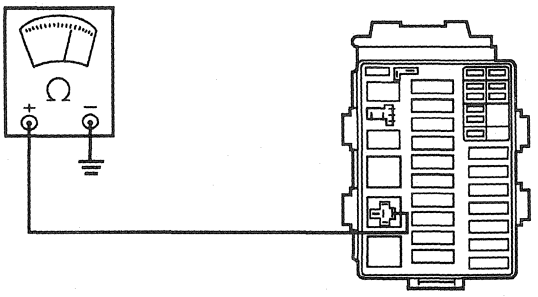 AJ0037-B	1 Connect an ohmmeter between starter relay connector Pin C1028-87, Circuit 113 (Y/LB) and ground. • Is the resistance 10 K ohms or less? → **Yes** REPAIR Circuit 113 (Y/LB) for short to ground. TEST the system for normal operation. → **No** GO to **B13**.
B13 CHECK CIRCUIT 32 (R/LB) FOR OPEN	
1 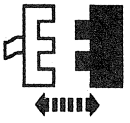 Transmission Range (TR) Sensor Connector C127 2 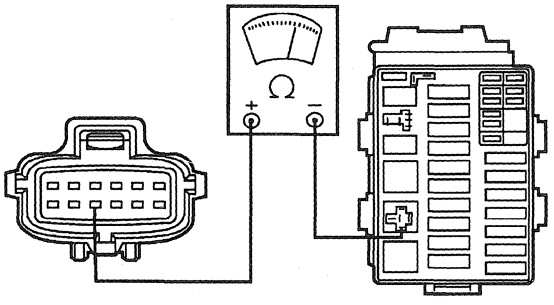 AJ0038-B	2 Connect an ohmmeter between starter relay connector Pin C1028-85, Circuit 32 (R/LB) and transmission range (TR) sensor connector Pin C127-10. • Is the resistance 5 ohms or less? → **Yes** GO to **B14**. → **No** REPAIR Circuit 32 (R/LB) for open. TEST the system for normal operation.

Official Licensed Product
Ford Motor Company

(Continued)

DIAGNOSIS AND TESTING (Continued)

PINPOINT TEST B: THE ENGINE DOES NOT CRANK OR THE RELAY DOES CLICK (Continued)

TEST CONDITIONS	TEST DETAILS/RESULTS/ACTIONS
B14 CHECK CIRCUIT 33 (W/PK) FOR OPEN	
1 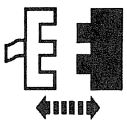 Steering Column/Ignition/Lighting Control (SCIL) C287 2 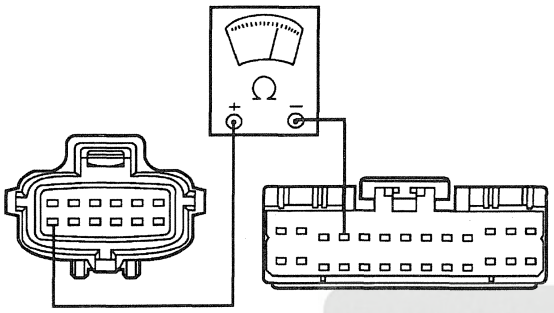 AJ0039-B	2 Connect an ohmmeter between steering column/ignition/lighting control module connector Pin C287-4 and transmission range (TR) sensor connector Pin C127-12. • Is the resistance 5 ohms or less? → **Yes** REPLACE the transmission range (TR) sensor. TEST the system for normal operation. → **No** REPAIR Circuit 33 (W/PK) for open. TEST the system for normal operation.

PINPOINT TEST C: THE ENGINE CRANKS SLOWLY

TEST CONDITIONS	TEST DETAILS/RESULTS/ACTIONS
C1 CHECK FOR VOLTAGE AT STARTER	
1 2 	3 Raise the vehicle on a hoist; refer to Section 100-02.

(Continued)

DIAGNOSIS AND TESTING (Continued)

PINPOINT TEST C: THE ENGINE CRANKS SLOWLY (Continued)

TEST CONDITIONS	TEST DETAILS/RESULTS/ACTIONS
C1 CHECK FOR VOLTAGE AT STARTER (Continued)	
4 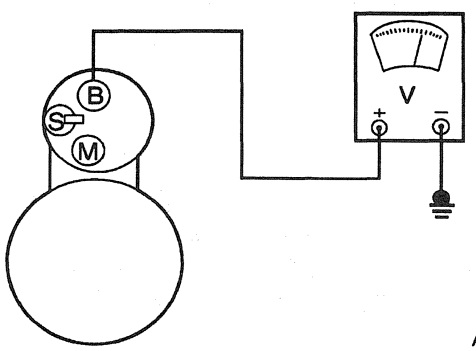 AJ0031-A	4 **NOTE:** Remove plastic safety cap on starter solenoid and connector at starter solenoid S terminal. Connect a voltmeter to starter B+ terminal. • Is voltage 11 volts or more? → **Yes** GO to **C2**. → **No** CHECK the wire connections between the battery and starter solenoid. If no concerns are noticed; REFER to Section 414-00 and CHECK battery charging system.
C2 MANUALLY CRANK STARTER	
1 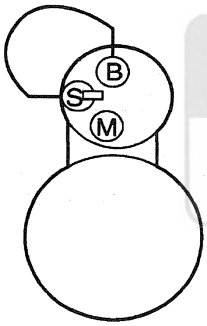 AJ0032-A	1 Connect a jumper wire to the B+ starter terminal and momentarily touch the other end to starter solenoid S terminal. • Does the starter motor crank and crank quickly? → **Yes** REPAIR Circuit 113 (Y/LB) or starter interrupt relay for loose or corroded connections. → **No** REPLACE the starter motor. TEST the system for normal operation.

Official Licensed Product
Ford Motor Company

PINPOINT TEST D: UNUSUAL STARTER NOISE

TEST CONDITIONS	TEST DETAILS/RESULTS/ACTIONS
D1 CHECK STARTER MOUNTING	
	1 Check that starter is properly mounted. 2 Check that all the connections are secure.

(Continued)

DIAGNOSIS AND TESTING (Continued)

PINPOINT TEST D: UNUSUAL STARTER NOISE (Continued)

TEST CONDITIONS	TEST DETAILS/RESULTS/ACTIONS
D1 CHECK STARTER MOUNTING (Continued)	
	3 Check other starter system components for proper mounting and connection, starter relay, battery, digital transmission range (TR) sensor and steering column/ignition/lighting control module. • Are the starting system components and wiring secure and undamaged? → **Yes** GO to **D2**. → **No** REPAIR as required. TEST the system for normal operation.
D2 CRANK ENGINE	
1 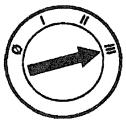 2	3 As engine is starting listen to individual components for noise due to gear tooth damage, shorting, sparking or knocking. • Is the noise due to ring gear tooth damage? → **Yes** REPLACE the ring gear. EXAMINE the starter pinion teeth. If damaged, REPLACE the starter motor or starter drive. TEST the system for normal operation. → **No** If noise sounds like shorting or sparking CHECK the ground feeds to battery or starter motor; REFER to Section 414-00. If noise sounds like knocking, REFER to Section 303-01 for engine repair diagnosis.

Official Licensed Product
Ford Motor Company

Component Tests

Starter Motor—Load Test

Conduct this test if the starter motor cranks slowly and to compare the current to specifications.

1. Connect Rotunda Alternator, Regulator, Battery and Starter Tester (ARBST). Make sure that current is not flowing through ammeter and heavy-duty carbon pile rheostat portion of circuit (rheostat at maximum counterclockwise position).

DIAGNOSIS AND TESTING (Continued)

2. **NOTE:** Make sure ignition switch is in the OFF position and S-terminal connector has been removed so engine does not start.

   Place transmission in NEUTRAL or PARK. Crank engine with ignition switch OFF and determine exact reading on voltmeter. This test is accomplished by disconnecting the connector S at starter solenoid and by connecting a remote-control starter switch from positive battery terminal to S-terminal of starter solenoid.
3. Stop cranking engine. Reduce resistance of carbon pile until voltmeter indicates same reading as that obtained while starter motor cranked the engine. The ammeter will indicate starter current draw under load. Check this with value listed in specifications.

Voltage Drop Tests

If the starter motor cranks slowly and the battery (10653) is satisfactory, there may be a malfunction of the starter motor or in the cranking circuit wiring. To determine if the problem is in the wiring, a voltage drop test must be performed.

These tests are performed to determine if there is excessive resistance in the starter motor circuit. Always make the volt-ohmmeter connections at the component terminal rather than at the wiring end connector. Making a connection at the wiring end connector could result in false readings because the meter will not pick up a high resistance between the wiring connector and the component.

Motor Feed Circuit

1. Disconnect the inertia fuel shutoff switch (IFS switch)(9341).
2. Connect a remote starter switch between the starter solenoid S-terminal and the battery positive (+) terminal.
3. Connect Rotunda 73 Digital Multimeter positive lead to the battery positive (+) post. Connect negative lead to the starter solenoid M-terminal.
4. Engage the remote starter switch. Read and record the voltage. The voltage reading should be 0.5 volt or less.
5. If the voltage reading is higher than this, indicating excessive resistance, move the volt-ohmmeter negative lead to the starter solenoid B-terminal and repeat the test. If the voltage reading at the B-terminal is lower than 0.5 volt, the concern is either in the connections at the starter solenoid or in the solenoid contacts.
6. Remove the cables from solenoid B-, S- and M-terminals. Clean the cables and connections and reinstall the cables to the proper terminals. Repeat Steps 1 through 5 above. If the voltage drop reading is still higher than 0.5 volt when checked at the M-terminal or lower when checked at the B-terminal, the concern is in the solenoid contacts. Remove and replace the starter motor or starter solenoid if available.
7. If the voltage reading taken at the solenoid B-terminal is still higher than 0.5 volt after cleaning the cables and connections at the solenoid, the concern is either in the positive (+) battery cable connection or in the positive battery cable itself.
8. By moving the volt-ohmmeter negative lead toward the battery and checking each mechanical connection point, the excessive voltage drop can be located. When the high reading disappears, the last mechanical point that was checked is the concern.

Official Licensed Product
Ford Motor Company

DIAGNOSIS AND TESTING (Continued)

Motor Feed Circuit

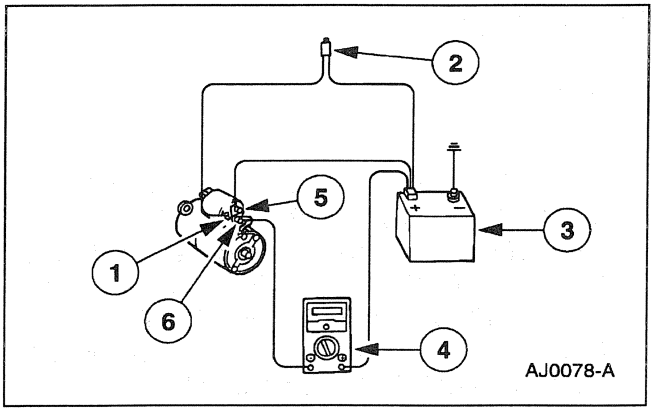

Item	Part Number	Description
1	—	S-Terminal
2	—	Remote Starter Switch
3	—	12V Battery
4	—	Rotunda 73 Digital Multimeter
5	—	B-Terminal
6	—	M-Terminal

Motor Ground Circuit

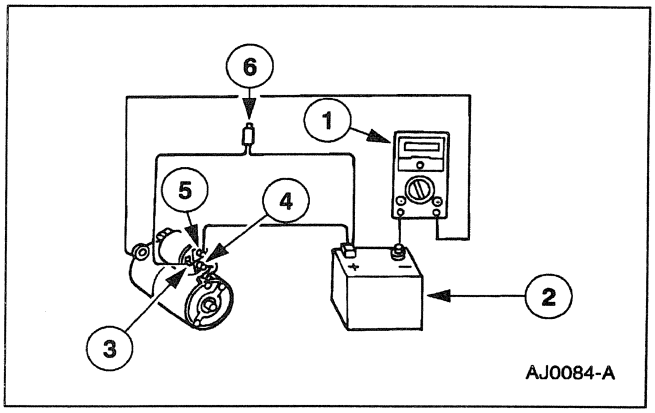

Item	Part Number	Description
1	—	Rotunda 73 Digital Multimeter
2	10653	Battery
3	—	S-Terminal
4	—	M-Terminal
5	—	B-Terminal
6	—	Remote Starter Switch

Official Licensed Product

Motor Ground Circuit

A slow cranking condition can be caused by resistance in the ground or return portion of the cranking circuit. Check the voltage drop in the ground circuit as follows:

1. Prevent the engine from starting by disconnecting the powertrain control module (PCM) relay.
2. Connect a remote starter switch between the starter solenoid S-terminal and the battery positive (+) terminal.
3. Connect Rotunda 73 Digital Multimeter positive lead to the starter motor housing (connection must be clean and free of rust or grease). Connect negative lead to the negative (-) battery terminal.
4. Engage the remote starter switch and crank the engine. Read and record the volt-ohmmeter reading. The reading should be 0.2 volt or less.
5. If the voltage drop is more than 0.2 volt, clean the negative cable connections at the battery and body connections, and retest. If the voltage drop is still too high, perform the following test.

Individual Cable

The resistance of any cable can be checked in the same manner by using Rotunda 73 Digital Multimeter.

1. Determine which way the current is flowing in the cable. Connect Rotunda 73 Digital Multimeter positive lead to the end of the cable nearest battery positive.
2. Connect multimeter negative lead to the terminal at the other end of the cable.
3. Crank the engine and observe multimeter. The voltage reading should be 0.2 volt or lower. If the voltage drop is too high, clean the terminal ends. Retest, and if still high, replace the cable.

REMOVAL AND INSTALLATION

Starter Motor

Removal

1. **WARNING: WHEN PERFORMING MAINTENANCE ON THE STARTING SYSTEM BE AWARE THAT HEAVY GAUGE LEADS ARE CONNECTED DIRECTLY TO THE BATTERY (10653). MAKE SURE PROTECTIVE CAPS ARE IN PLACE WHEN MAINTENANCE IS COMPLETE.**

   Disconnect the battery ground cable (14301).

2. Raise and support the vehicle; refer to Section 100-02.

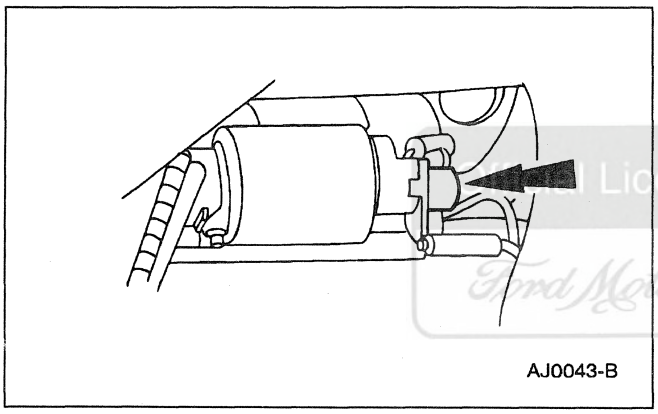

3. Remove the starter motor solenoid terminal cover (11N087).

Licensed Product
Ford Motor Company

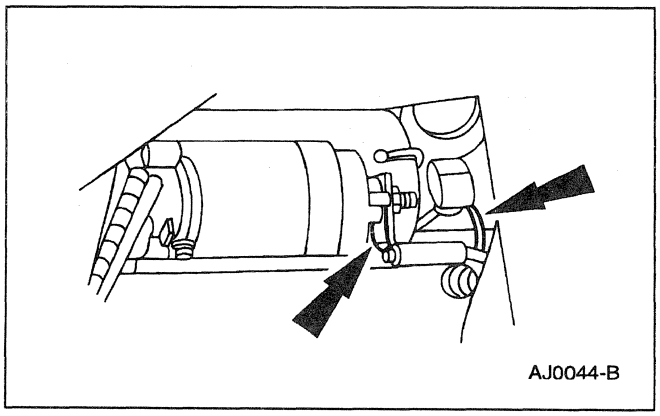

4. Remove the starter solenoid connector and the starter cable.

REMOVAL AND INSTALLATION (Continued)

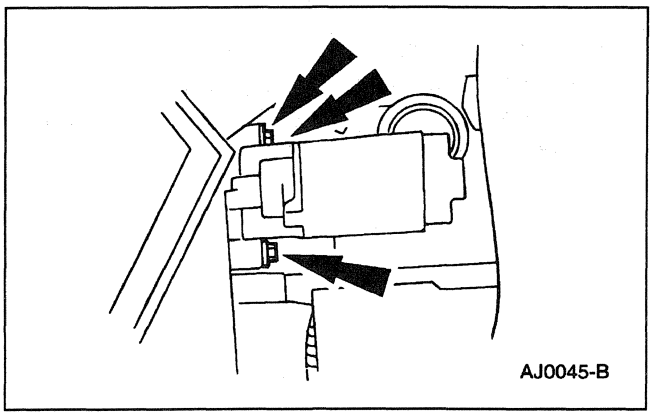

5. Remove the bolts from the starter motor (11002).

Installation

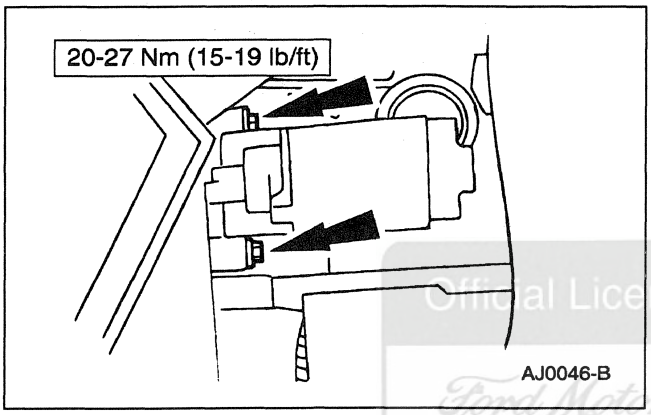

1. Follow the removal procedure in reverse order.

Official Licensed Product
Ford Motor Company

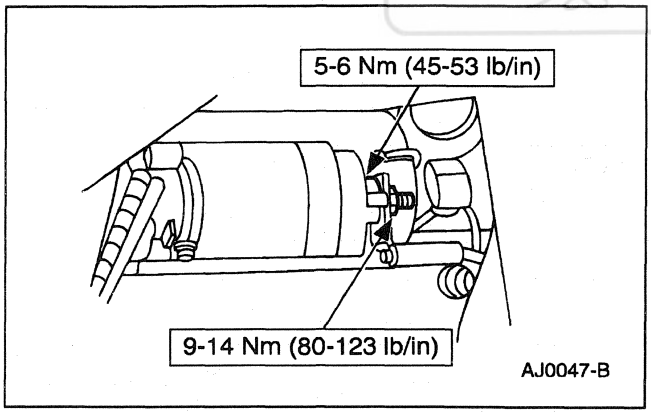

GENERAL PROCEDURES

Starter Drive/Flywheel Ring Gear Inspection

1. Remove the starter motor; refer to Starter Motor in this section.

GENERAL PROCEDURES (Continued)

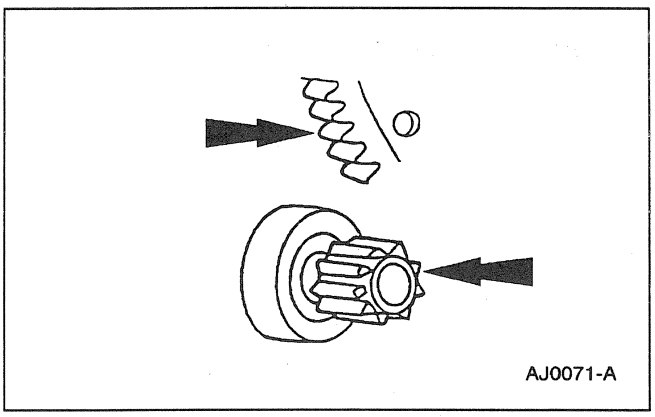
AJ0071-A

2. Check the wear patterns on the starter drive (11350) and the flywheel ring gear. If the wear pattern is normal, install the starter motor; refer to Starter Motor in this section.

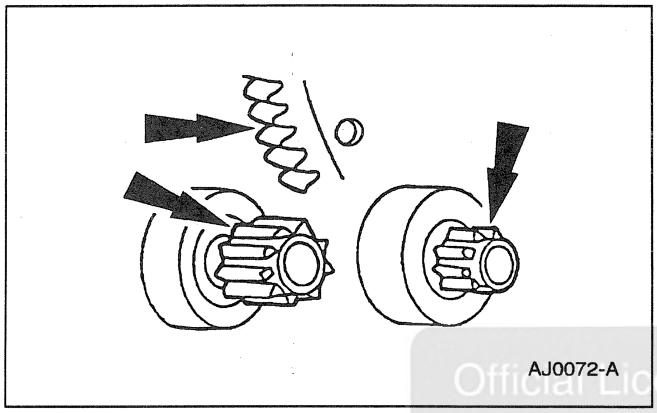
AJ0072-A

3. If the starter drive gear and the flywheel ring gear are not fully meshing or the gears are milled or damaged, replace the starter motor; refer to Starter Motor in this section, and replace the flywheel ring gear; refer to Section 303-01.

Official Licensed Product
Ford Motor Company

SPECIFICATIONS

General Specifications

Item	Specification
Normal Engine Cranking Speed rpm	140-220
Starter Motor Diameter mm (inches)	78 (3)
Starter Motor Maximum Load Amperes	800
Starter Motor Minimum Stall Torque (at 5 Volts) Nm (Lb-Ft)	14.7 (11.0)
Starter Motor No Load Current Draw Amperes	60/80
Starter Motor Normal Load Current Draw Amperes	130/220
Starting Circuit Maximum Voltage Drop (Engine Temperature Normal) Volts	0.5
Lubricants	
Syncolube (PTFE) Low Temperature Grease	WSG-M1C218-B2

(Continued)

General Specifications

Item	Specification
Dow Formulation Silastic 737 or GE Silicone RTV 123	ESA-M4G294-A
Super Premium SAE 10W-30 Engine Oil XO-10W-30 QSP	WSS-M2C153-F

Torque Specifications

Description	Nm	Lb/Ft	Lb/In
Starter Motor Bolts	20-27	15-19	—
Starter Motor Ground Cable Nut	7-9	—	62-79
Starter Solenoid M-Terminal Nut	9-14	—	80-123
Starter Solenoid B-Terminal Nut	7-9	—	62-79
Threaded "S" Terminal	5-6	—	45-53

SECTION 303-07 Engine Ignition

VEHICLE APPLICATION: Mark VIII

SUBJECT	PAGE
DESCRIPTION AND OPERATION	
Ignition System	303-07-2
DIAGNOSIS AND TESTING	
Ignition System	303-07-3
REMOVAL AND INSTALLATION	
Ignition Coil	303-07-3
Spark Plug	303-07-6
SPECIFICATIONS	303-07-8

Official Licensed Product
Ford Motor Company

DESCRIPTION AND OPERATION

Ignition System

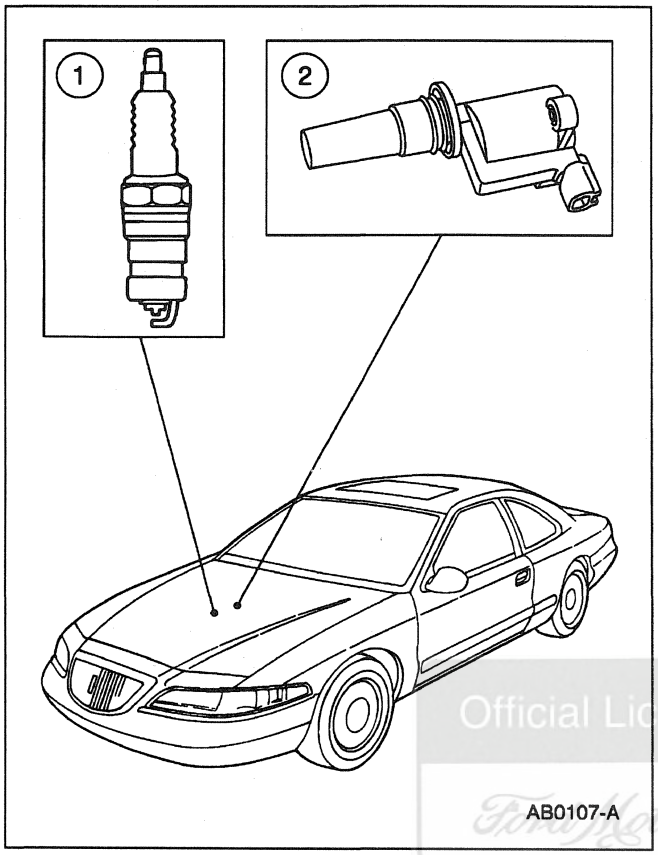

Item	Part Number	Description
1	12405	Spark Plug
2	12029	Ignition Coil

The electronic ignition (EI) system for the 4.6L engine consists of the following components:

- crankshaft position sensor (CKP sensor)(6C315)
- camshaft position sensor (CMP sensor)(6B288)
- ignition coil
- the spark angle portion of powertrain control module (PCM)(12A650)
- related wiring

Crankshaft Position (CKP) Sensor

NOTE: Initial engine ignition timing is set at 10 ± 2 degrees BTDC and is not adjustable.

The crankshaft position sensor is a variable reluctance sensor, which is triggered by a 36-minus-1 tooth trigger pulse wheel located inside the engine front cover (6019). The sine-wave type signal generated from the crankshaft position sensor provides two types of information:

- the position of the crankshaft (6303) in 10-degree increments.
- crankshaft speed (rpm).

The powertrain control module uses this information to determine ignition coil turn on and turn off time and for misfire detection.

Camshaft Position (CMP) Sensor

The camshaft position sensor :

- is a variable reluctance sensor.
- is triggered by the high point mark on the LH exhaust camshaft (6250).
- provides camshaft rotational location information to powertrain control module.

The powertrain control module uses the camshaft position (CMP) signal for ignition coils fire sequencing. The powertrain control module also uses the CMP signal for fuel injector synchronization.

Ignition Coil

The 4.6L engine uses eight separate ignition coils. Each ignition coil is controlled by the powertrain control module.

Each ignition coil is mounted directly above each spark plug (12405) and activates its own spark plug in the proper sequence as controlled by the powertrain control module; refer to Powertrain Control/Emissions Diagnosis Manual [1] for additional information on the ignition system.

Official Licensed Product

1 Can be purchased as a separate item.

DESCRIPTION AND OPERATION (Continued)

Failure Mode Effects Management

During some electronic ignition system faults, the failure mode effects management portion of the powertrain control module will maintain vehicle operation:

- If the spark output signal is interrupted, the powertrain control module will automatically turn the ignition coils ON and OFF using the CKP signal input. This will result in fixed-spark timing (10 degrees BTDC) and fixed dwell time (no CCD).
- If the powertrain control module loses CMP input while the engine is running, the powertrain control module will retain the proper firing sequence and it will continue to fire the ignition coil to maintain engine operation.

For additional information on the electronic ignition system, Refer to Powertrain Control/Emissions Diagnosis Manual [2].

Ignition Diagnostic Monitor

The ignition diagnostic monitor is a function of the powertrain control module. The powertrain control module stores the information for use during diagnostic test mode.

DIAGNOSIS AND TESTING

Ignition System

Refer to Powertrain Control/Emissions Diagnosis Manual [2].

Official Licensed Product
Ford Motor Company

REMOVAL AND INSTALLATION

Ignition Coil

Removal

1. Disconnect the battery ground cable (14301).
2. Remove air cleaner outlet tube (9B659); refer to Section 303-12.
3. Remove the RH spark plug cover (6P068).
   - Remove the bolts from the RH spark plug cover.
   - Remove the spark plug cover.

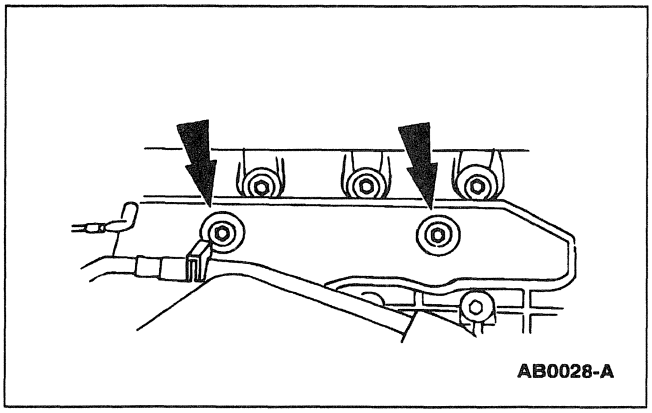

2 Can be purchased as a separate item.

REMOVAL AND INSTALLATION (Continued)

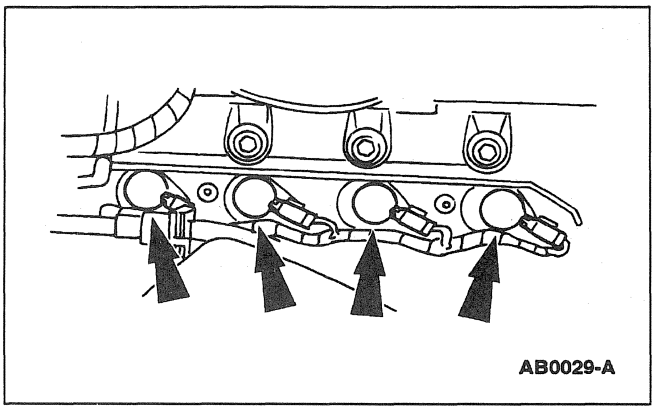

4. Pull the ignition coil (12029) from the spark plugs (12405).

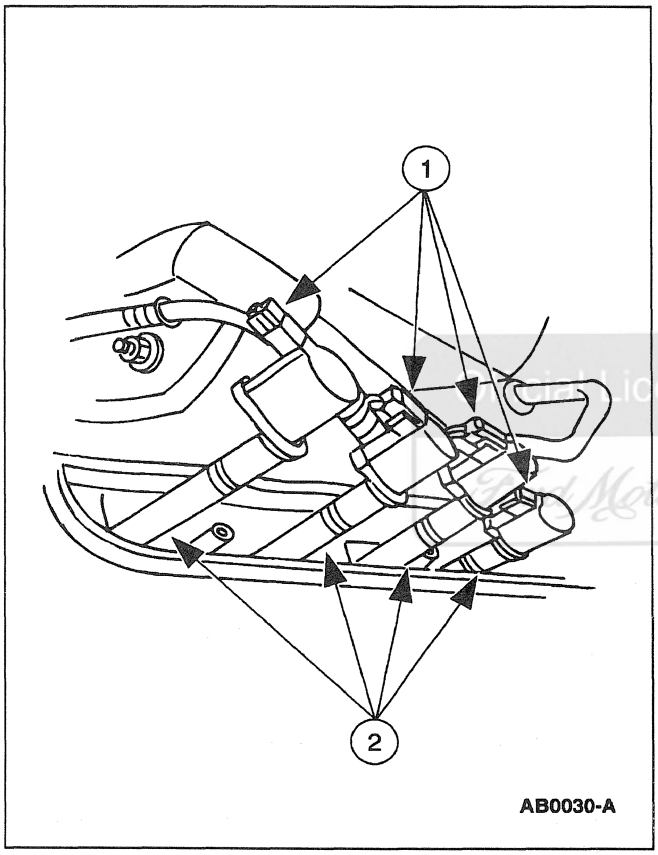

5. Remove the ignition coil.
   1 Disconnect the connectors from the ignition coil.
   2 Remove the ignition coil from the spark plugs.

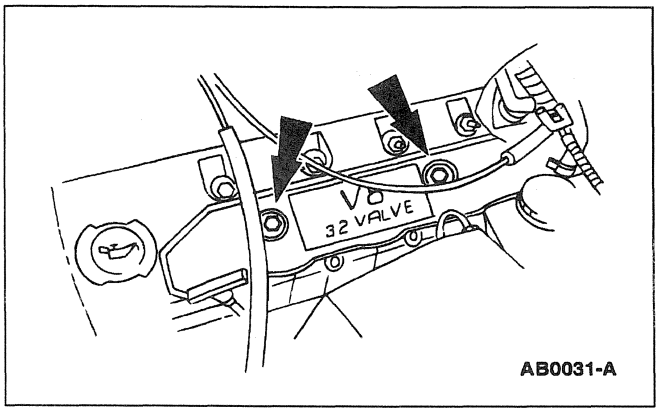

6. Remove the bolts from the LH ignition coil cover and remove the ignition coil cover.

Ford Licensed Product
Ford Motor Company

REMOVAL AND INSTALLATION (Continued)

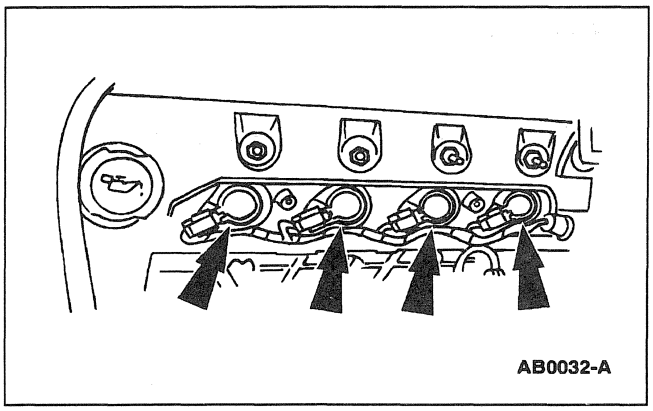

7. Pull the ignition coil from the spark plugs.

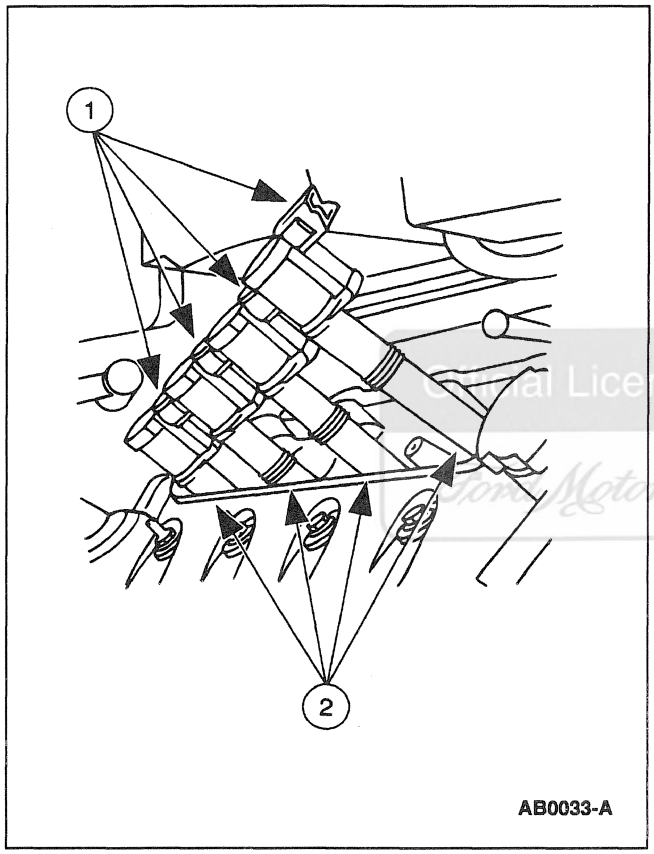

8. Remove the ignition coil.
   1 Disconnect the connectors from the ignition coil.
   2 Remove the ignition coil from the spark plugs.

Ford Motor Company Licensed Product

9. Inspect ignition coil for cracks, carbon tracking and dirt.

REMOVAL AND INSTALLATION (Continued)

Installation

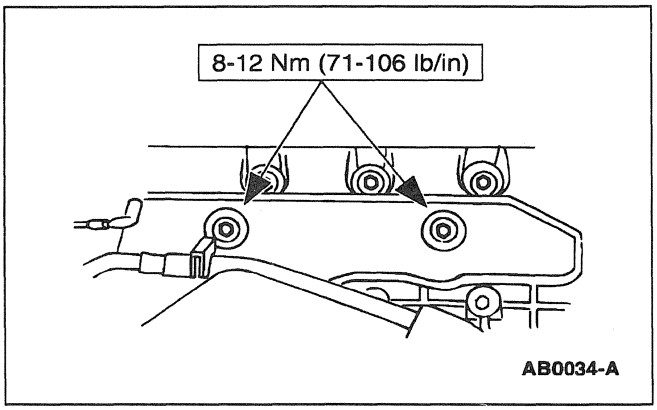

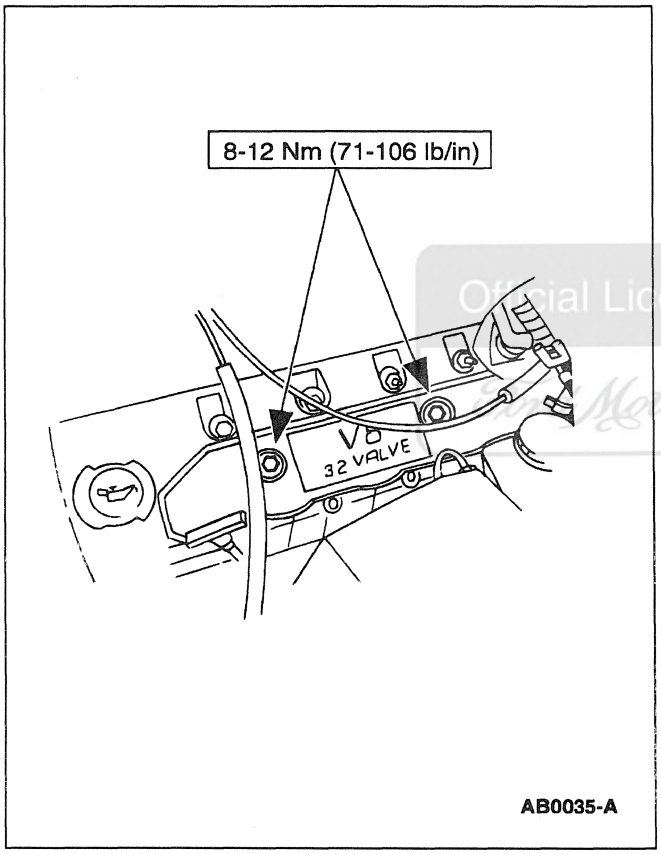

1. Follow the removal procedure in reverse order.

Official Licensed Product
Ford Motor Company

Spark Plug

Removal

1. Remove the ignition coil; refer to Ignition Coil in this section.

REMOVAL AND INSTALLATION (Continued)

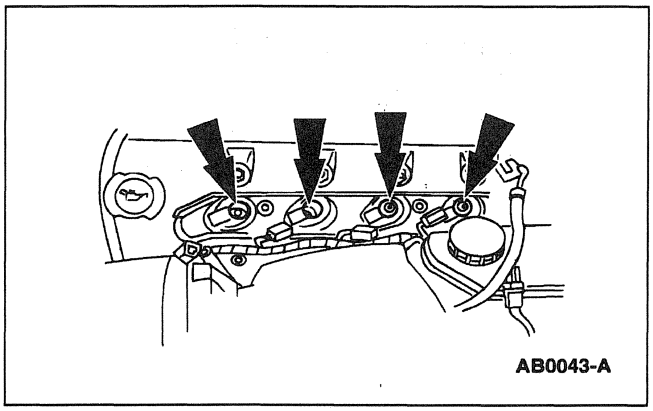
AB0043-A

2. Remove the LH spark plugs (12405).

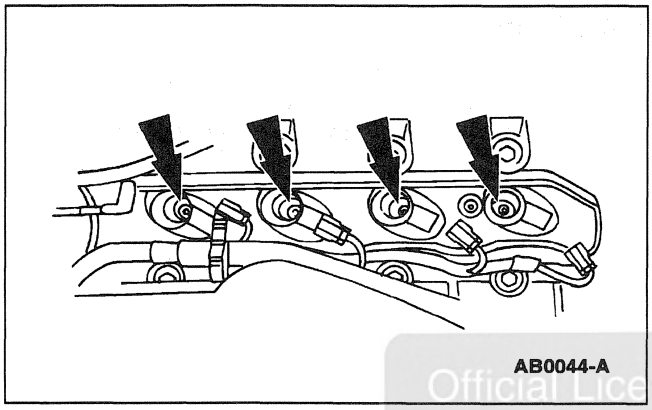
AB0044-A

3. AWSF-32E indicates the center electrode is enhanced with platinum. These are used in all 8 cylinders of the engine.

   Remove the RH spark plugs.

Official Licensed Product
Ford Motor Company

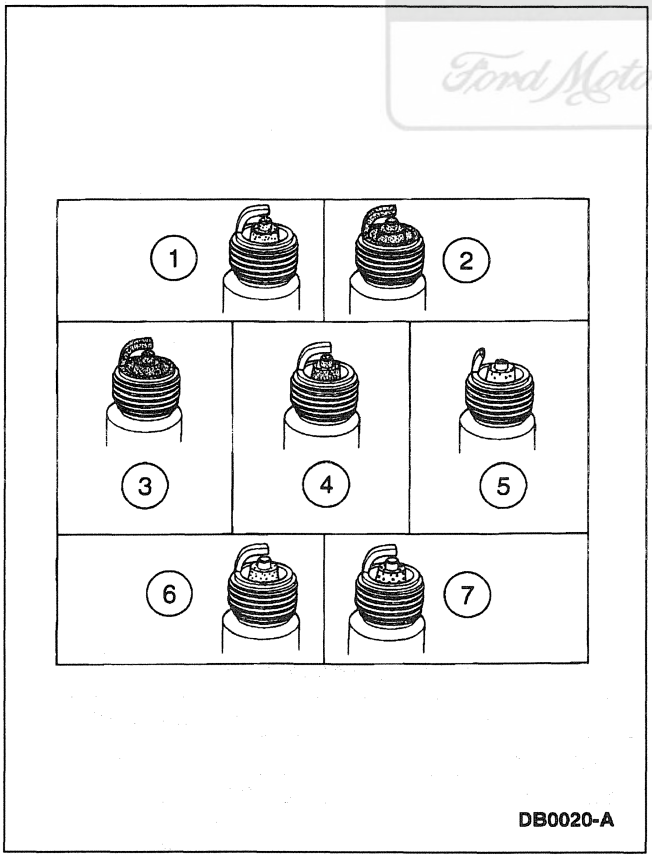

DB0020-A

4. Inspect the spark plug.

Item	Description
1	Deposits Bridging Spark Plug Gap
2	Wet Black Deposits (Oil Fouling)
3	Dry Black Deposits (Carbon Fouling)
4	Normal Spark Plug
5	Pre-Ignition
6	Overheating
7	Fused Spot Deposits

REMOVAL AND INSTALLATION (Continued)

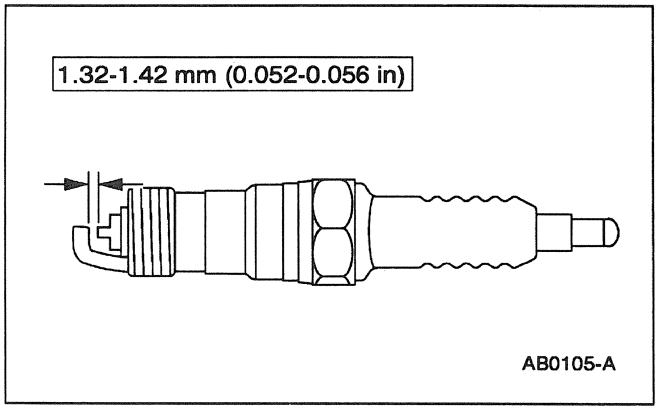

5. Check and adjust the spark plugs.

Installation

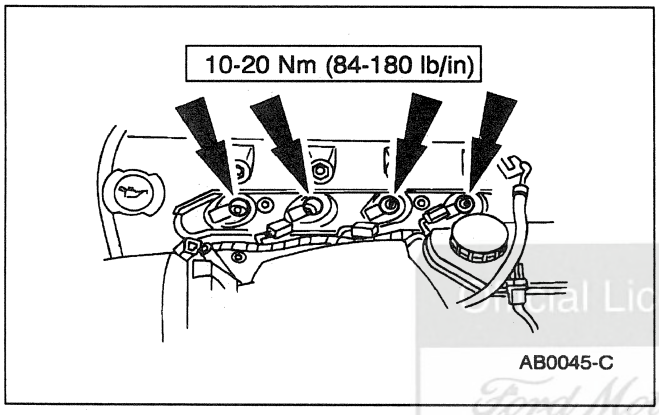

1. Follow the removal procedure in reverse order.

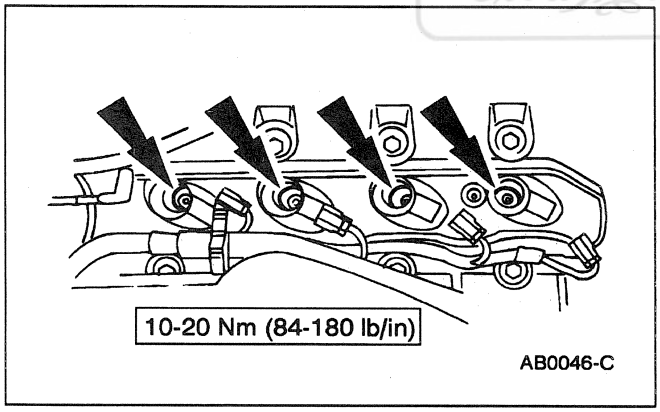

Official Licensed Product
Ford Motor Company

SPECIFICATIONS

General Specifications

Item	Specification
Spark Plug Type	AWSF-32E
Spark Plug Gap	1.3-1.4 mm (0.052-0.056 inch)

(Continued)

General Specifications

Item	Specification
Firing Order	1-3-7-2-6-5-4-8
Ignition Timing	10 ± 2 Degrees Before Top Dead Center (Not Adjustable)

SPECIFICATIONS (Continued)

Lubricant/Adhesive/Cleaner Specifications

Description	Part Number	Ford Specification
Silicone Brake Caliper Grease and Dielectric Compound	D7AZ-19A331-A	ESE-M1C171-A

Torque Specifications

Description	Nm	Lb/Ft	Lb/In
Crankshaft Position Sensor Screw	8-12	—	71-106
Ignition Coil Cover Assembly Bolts	8-12	—	71-106
A/C Compressor Bolts	20-30	15-22	—
Spark Plugs	10-20	—	84-180

Official Licensed Product
Ford Motor Company

SECTION 303-08 Engine Emission Control

VEHICLE APPLICATION: Mark VIII

SUBJECT	PAGE
DESCRIPTION AND OPERATION	
Engine Emission Control	303-08-2
DIAGNOSIS AND TESTING	
Engine Emission Control	303-08-4
REMOVAL AND INSTALLATION	
Differential Pressure Feedback EGR Valve	303-08-7
EGR Vacuum Regulator Solenoid	303-08-9
EGR Valve	303-08-5
EGR Valve Tube	303-08-6
PCV Valve/Ventilation Hose	303-08-9
Secondary Air Injection Diverter Valve	303-08-12
Secondary Air Pump	303-08-11
SPECIFICATIONS	303-08-13

Official Licensed Product
Ford Motor Company

DESCRIPTION AND OPERATION

Engine Emission Control

Positive Crankcase Ventilation (PCV) System

⚠ **CAUTION: Do not remove the PCV system from the engine. Operating engine without PCV system will reduce both fuel economy and engine ventilation. This will weaken engine performance and shorten engine life.**

The positive crankcase ventilation (PCV) system cycles crankcase gases back through the engine where they are burned. The positive crankcase ventilation valve (PCV valve)(6A666) :

- regulates the amount of ventilating air and blow-by fuel vapor to the intake manifold (9424).
- prevents backfire from traveling into the crankcase.
- is mounted in a vertical position.

Typical PCV Air Flow Diagram

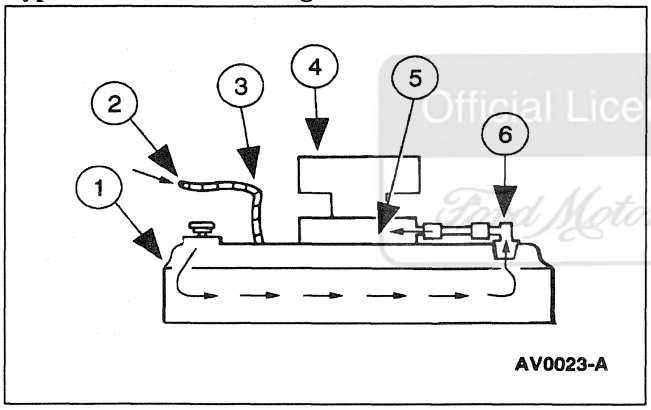

Item	Part Number	Description
1	6582	Valve Cover
2	—	To Air Cleaner Outlet Tube (9B659)
3	6758	Crankcase Ventilation Tube
4	9E926	Throttle Body
5	9424	Intake Manifold
6	6A666	Positive Crankcase Ventilation Valve

EGR Valve

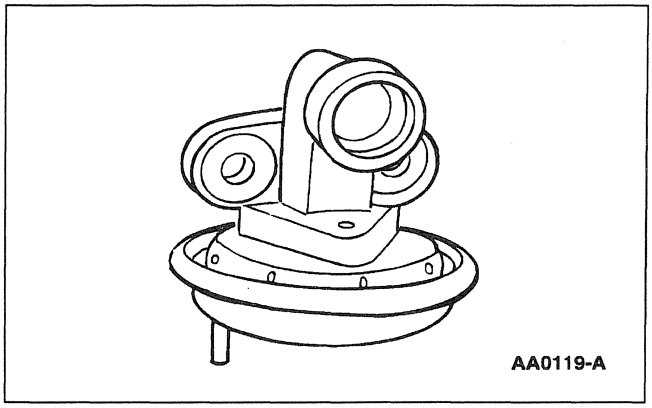

Exhaust Gas Recirculation (EGR) System

The exhaust gas recirculation (EGR) system is designed to:

- reintroduce exhaust gas into the combustion cycle.
- lower combustion temperatures.
- reduce the formation of oxides of nitrogen.

The amount of exhaust gas reintroduced and the timing of the cycle varies by calibration. Timing and volume are controlled by the following:

- engine rpm
- engine vacuum
- exhaust system back pressure
- engine coolant temperature
- throttle position

The EGR valve (EGR valve)(9D475) is vacuum actuated. The vacuum hose routing diagram is shown on the vehicle emission control information decal.

The EGR system is a differential pressure feedback EGR system. Differential pressure feedback EGR is a subsonic closed loop EGR system. The differential pressure feedback EGR system:

- monitors EGR flow rate by the pressure drop across the metering orifice.
- uses an EGR pressure transducer as the feedback device.

Official Licensed Product Ford Motor Company

DESCRIPTION AND OPERATION (Continued)

- controls pressure that is varied by the valve movement using vacuum output of the EGR vacuum regulator solenoid.
- uses the EGR valve only as a pressure regulator, rather than a flow metering device.
- allows for a more accurate assessment of EGR flow requirements.

Differential Pressure Feedback EGR Flow Diagram

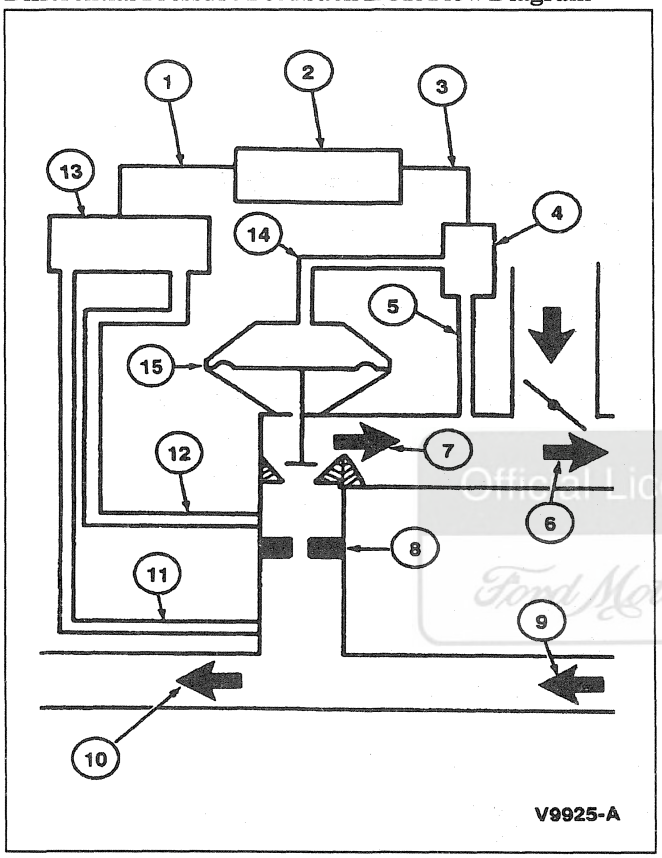

Item	Part Number	Description
1	—	Analog Voltage Input
2	12A650	Powertrain Control Module
3	—	Duty Cycle Output
4	9J459	EGR Vacuum Regulator Solenoid
5	—	Vacuum Source
6	—	Intake Vacuum
7	—	EGR Flow
8	—	Metering Orifice (Part of 9D475)
9	—	Exhaust Flow
10	—	Exhaust Pressure
11	—	Exhaust Pressure Input
12	—	Controlled Pressure Input
13	9J460	EGR Pressure Transducer
14	—	Vacuum Output
15	9D475	EGR Valve

(Continued)

Exhaust Emission Control System

Vehicle Emission Control Information Decal

Vacuum hoses on the engine use a color stripe to aid in hose routing checks. The stripe will usually be the same color as on the vehicle emission control information decal, but the correct vacuum hose routing must be verified by using the correct component connections shown on the decal.

Typical Vehicle Emission Control Information Decal

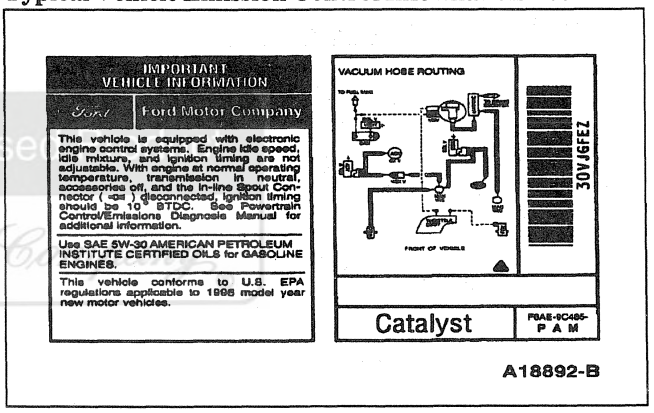

Secondary Air Injection Diverter Valve

The secondary air injection diverter valve (9F491) used in this electronic-controlled secondary air injection system direct the secondary air from the secondary air injection pump (AIR pump), downstream to the exhaust manifolds (9430).

DESCRIPTION AND OPERATION (Continued)

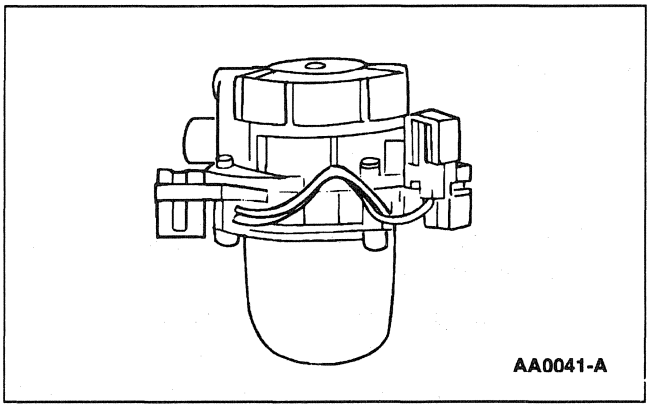

Secondary Air Injection Pump

The secondary air injection pump (AIR pump)(9A486) is:

- an electric air pump which supplies pressurized air to the engine to aid in the reduction of emissions during the first 20 to 120 seconds of engine operation.
- controlled by the powertrain control module (PCM)(12A650).
- remote-mounted and incorporates a non-repairable filter and splash shield.

Secondary Air Injection Diagram

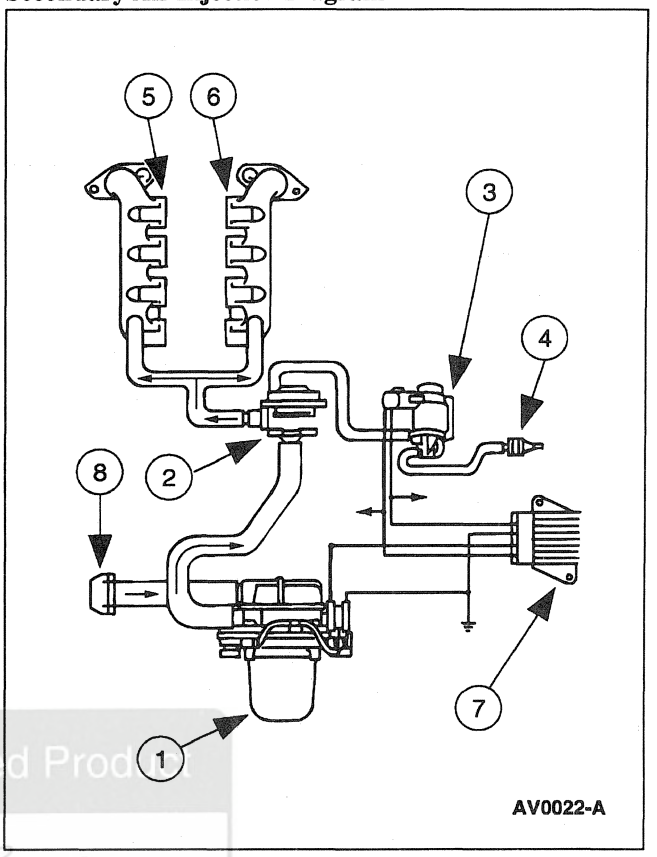

Item	Part Number	Description
1	9A486	Secondary Air Injection Pump
2	9F491	Secondary Air Injection Diverter Valve
3	9H465	Secondary Air Injection Control Solenoid Vacuum Valve
4	12A197	Distributor Vacuum Control Check Valve
5	9430	Exhaust Manifold RH
6	9430	Exhaust Manifold LH
7	2B373	Anti-Lock Brake Control Module
8	9C463	Splash Shield

Official Licensed Product
Ford Motor Company

DIAGNOSIS AND TESTING

Engine Emission Control

Refer to the Powertrain Control/Emissions Diagnosis Manual [1].

1 Can be purchased as a separate item.

REMOVAL AND INSTALLATION

EGR Valve

Removal

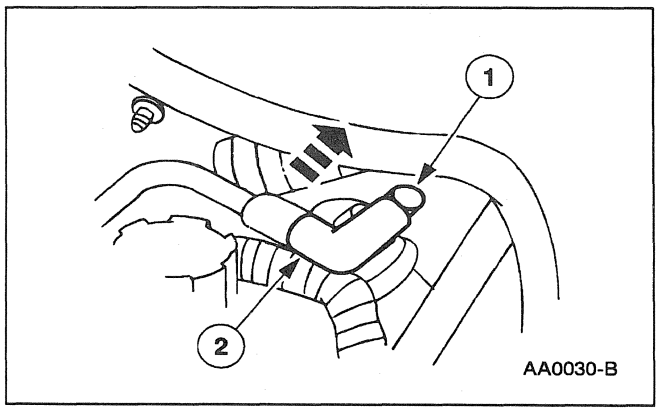

1. Remove the positive crankcase ventilation valve (PCV valve)(6A666).
   1 Lift the positive crankcase ventilation valve out of the valve cover (6582).
   2 Disconnect the crankcase vent connector and hose (6C324) from the positive crankcase ventilation valve.

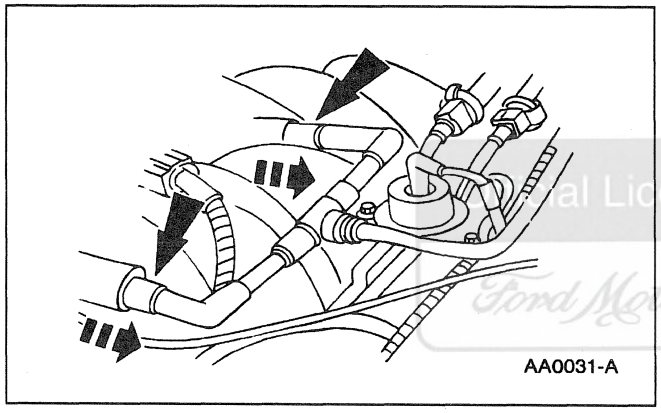

2. Remove the crankcase vent connector and hose from the intake manifold.

Ford Motor Company

3. **NOTE:** Cleaning of the positive crankcase ventilation valve is not recommended.

   Shake and inspect the valve for splits or cracks. If the positive crankcase ventilation valve does not rattle, replace it.

Installation

1. Follow the removal procedure in reverse order.

2. Inspect for vacuum leaks.

REMOVAL AND INSTALLATION (Continued)

EGR Valve Tube

Removal

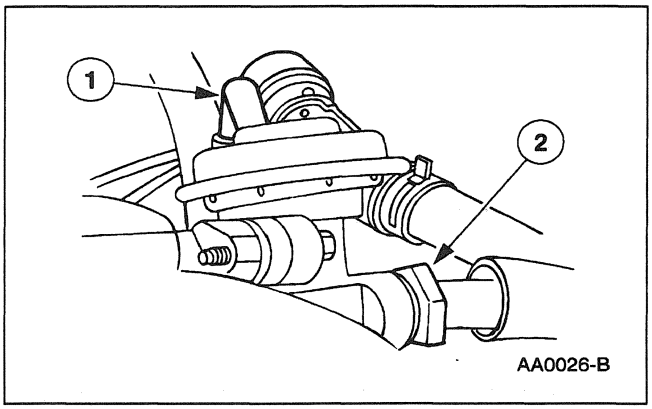

1. Disconnect the hose and tube from EGR valve (EGR valve)(9D475)
   1 Disconnect the vacuum hose from EGR valve.
   2 Disconnect the EGR valve-to-exhaust manifold tube from EGR valve.

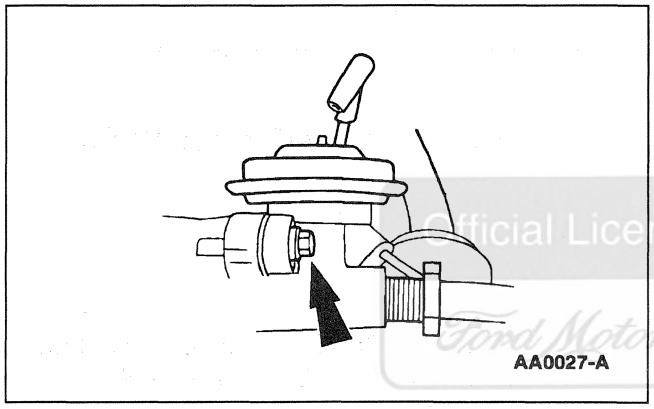

2. Remove two bolts from the EGR valve.

Official Licensed Product
Ford Motor Company

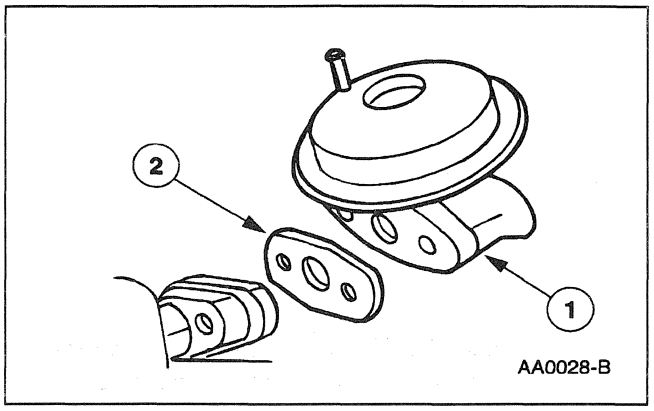

3. Remove the EGR valve.
   1 Remove the EGR valve from the vehicle.
   2 Remove the EGR valve gasket (9D476).

4. Inspect the EGR valve for blockage or contamination and vacuum leaks.

5. Clean the EGR valve.

REMOVAL AND INSTALLATION (Continued)

Installation

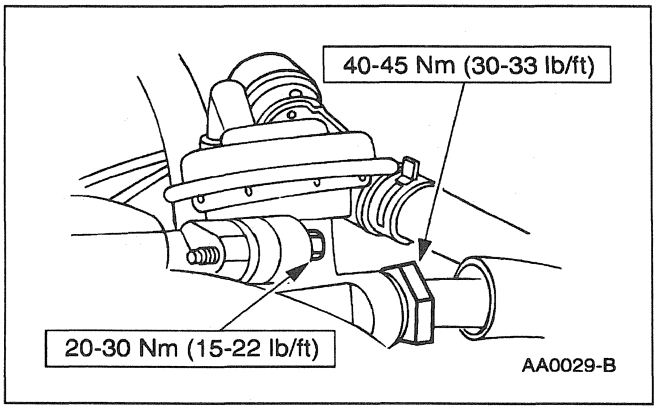

1. Follow the removal procedure in reverse order.

2. Inspect for vacuum leaks. If leaks are detected, repair as required.

Differential Pressure Feedback EGR Valve

Removal

Official Licensed Product
Ford Motor Company

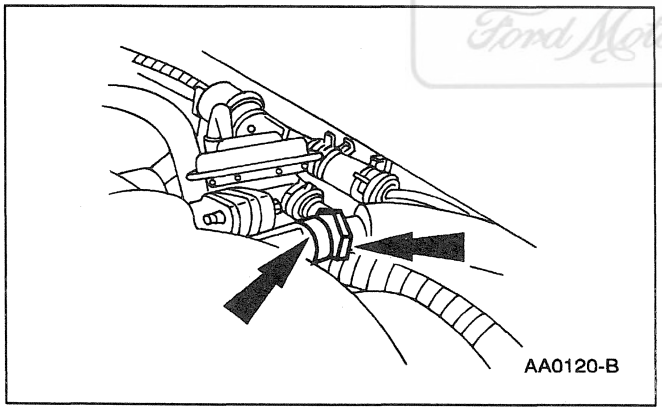

1. Disconnect the EGR valve to exhaust manifold tube (9D477) from the EGR valve (EGR valve)(9D475) .

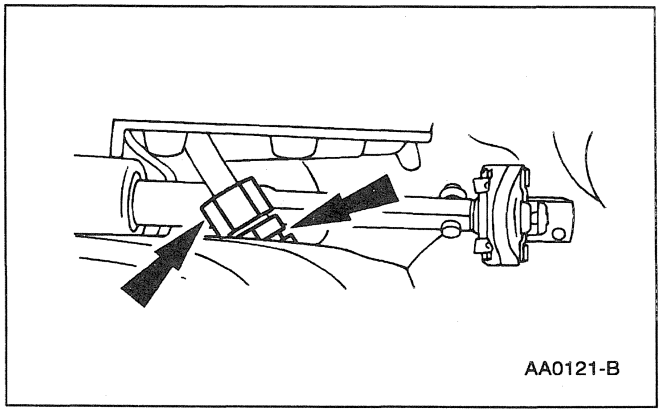

2. Disconnect the EGR valve to exhaust manifold tube from the EGR valve tube to manifold connector (9F485).

REMOVAL AND INSTALLATION (Continued)

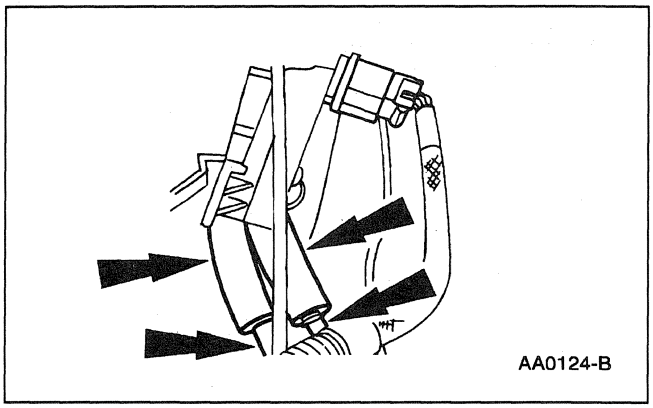

3. Disconnect the EGR valve to exhaust manifold tube from the EGR pressure transducer hoses.

4. Remove the EGR valve to exhaust manifold tube from the vehicle.

Installation

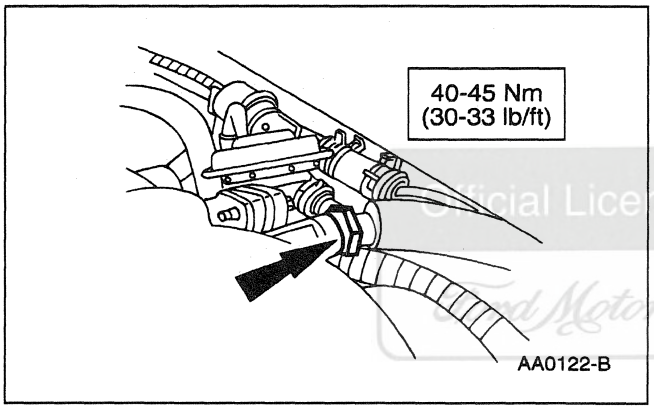

1. Follow the removal procedure in reverse order.

Official Licensed Product
Ford Motor Company

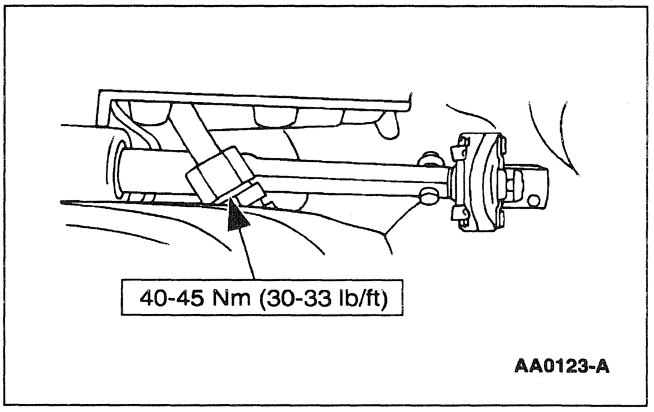

REMOVAL AND INSTALLATION (Continued)

EGR Vacuum Regulator Solenoid

Removal

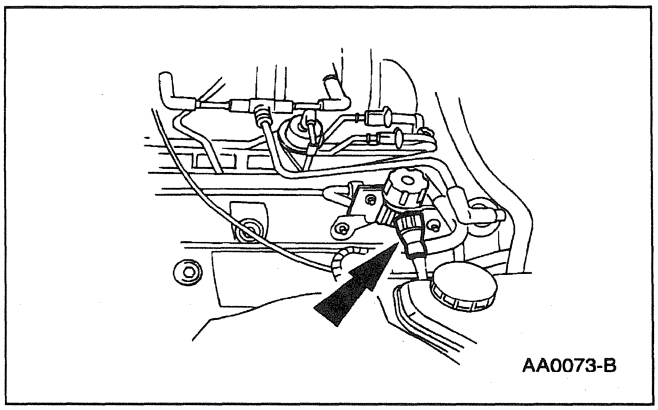

1. Disconnect the engine control sensor wiring (12A581) from the EGR vacuum regulator solenoid (9J459).

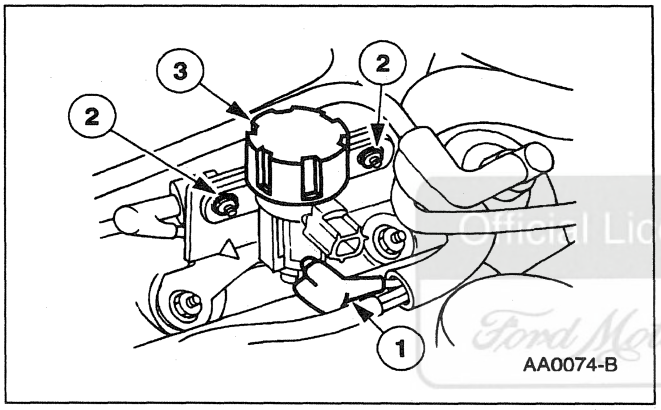

2. Remove the EGR vacuum regulator solenoid.
   1 Disconnect the main emission vacuum control connector (9E498) from the EGR vacuum regulator solenoid.
   2 Remove the nuts from the EGR vacuum regulator solenoid.
   3 Remove the EGR vacuum regulator solenoid from the vehicle.

Ford Motor Company

Installation

1. Follow the removal procedure in reverse order.

PCV Valve/Ventilation Hose

Removal

1. Remove the cowl vent screen (018A16); refer to Section 501-16.

REMOVAL AND INSTALLATION (Continued)

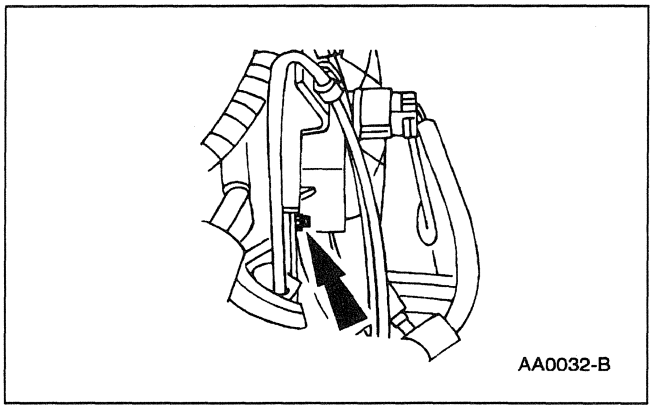

2. Remove the nut from the EGR pressure transducer.

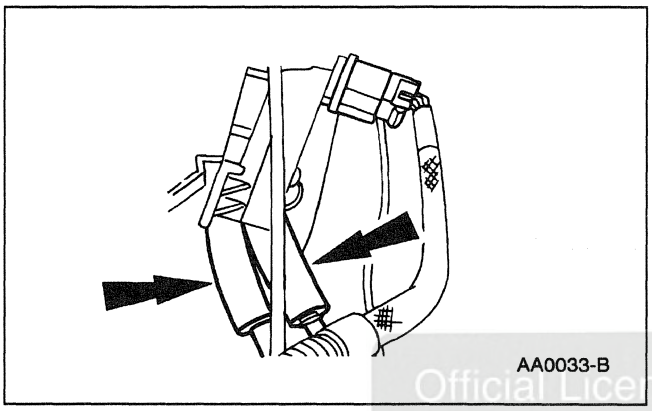

3. Disconnect the hoses from the EGR pressure transducer.

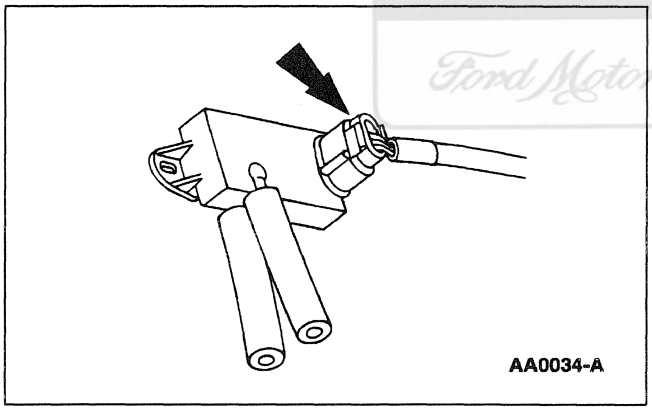

4. Disconnect the connector from the EGR pressure transducer.

Official Licensed Product
Ford Motor Company

REMOVAL AND INSTALLATION (Continued)

Installation

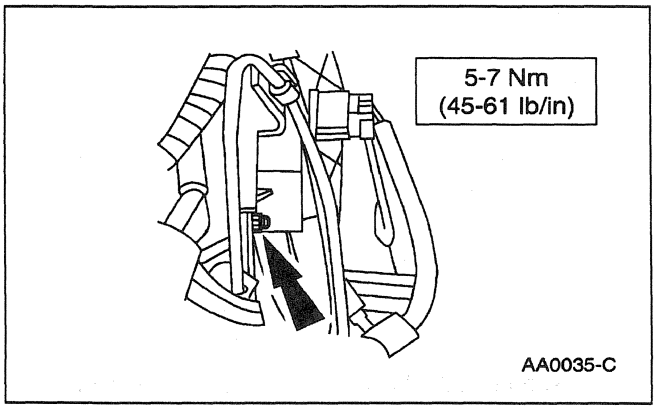

1. Follow the removal procedure in reverse order.

Secondary Air Pump

Removal

Official Licensed Product
Ford Motor Company

1. Remove the front valance panel (17626); refer to Section 413-06.
2. Disconnect the battery ground cable (14301).
3. Disconnect the pump hose.

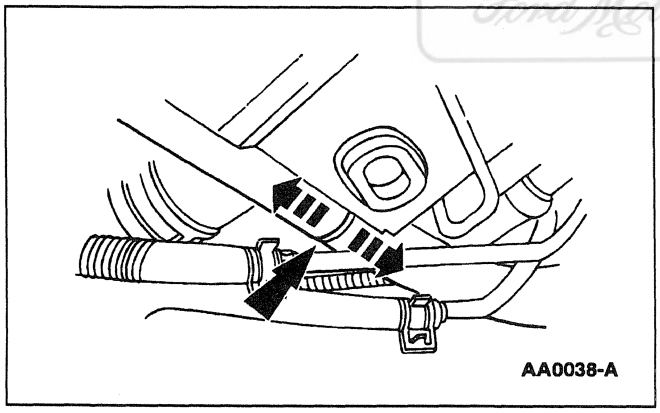

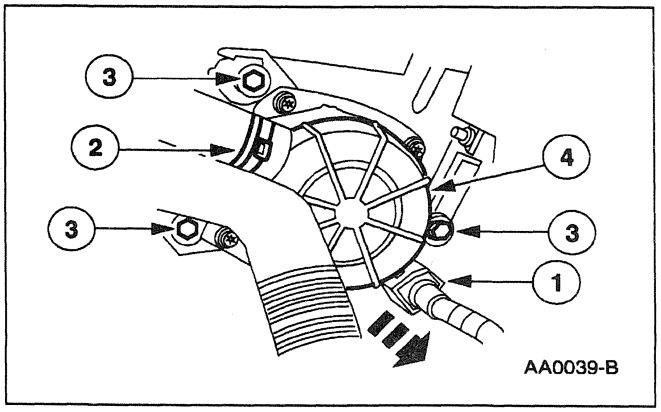

4. Remove the secondary air injection pump (AIR pump)(9A486).
   1 Disconnect the connector.
   2 Remove the hose clamps. Carefully remove the hoses.
   3 Remove the screws.
   4 Remove the secondary air injection pump.

REMOVAL AND INSTALLATION (Continued)

Installation

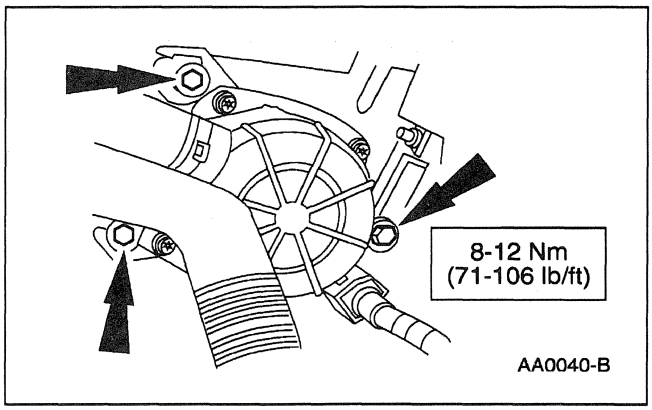

1. Follow the removal procedure in reverse order.

Secondary Air Injection Diverter Valve

Removal

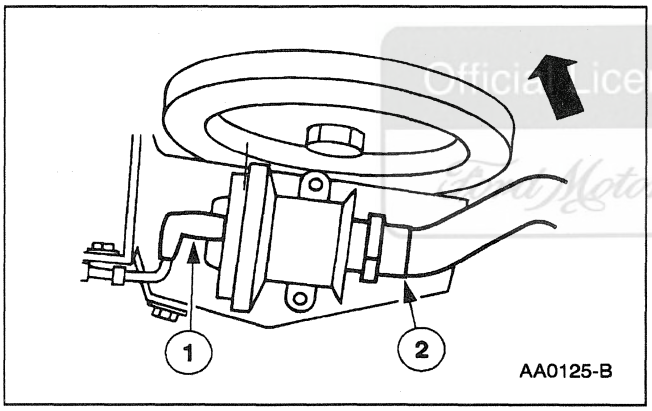

1. Disconnect the hoses from the secondary air injection diverter valve (9F491).
   1 Disconnect the vacuum hose.
   2 Disconnect the secondary air injection check valve inlet hose (9B466).

2. Raise the vehicle on a hoist; refer to Section 100-02.

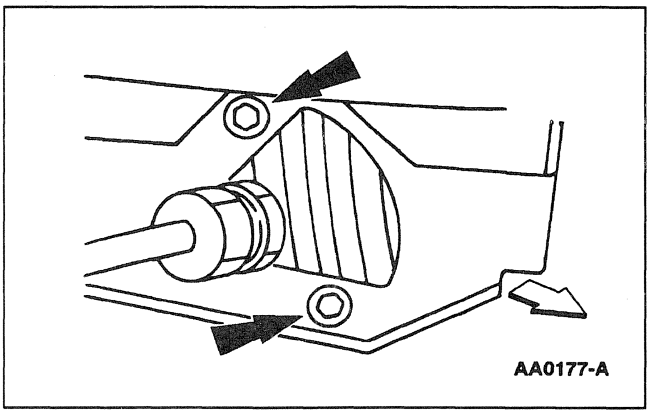

3. Remove the bolts from the secondary air injection diverter valve bracket and remove the secondary air injection diverter valve.

REMOVAL AND INSTALLATION (Continued)

Installation

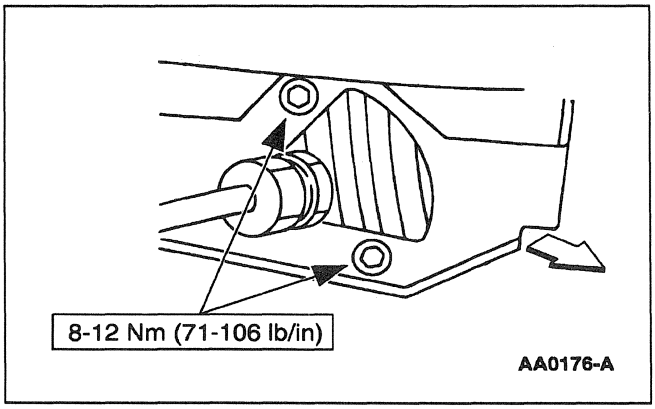

1. Follow the removal procedure in reverse order.

SPECIFICATIONS

Torque Specifications

Description	Nm	Lb-Ft	Lb-In
EGR Valve Bolts	20-30	15-22	—
EGR Valve to Exhaust Manifold Tube Nuts	40-45	30-33	—
Differental Preesure Feedback EGR Valve Retaining Nuts	5-7	—	45-61
EGR Valve Tube Connector to Exhaust Manifold	40-45	30-33	—

(Continued)

Torque Specifications

Description	Nm	Lb-Ft	Lb-In
Secondary Air Injection Diverter Valve Retaining Bolts	8-12	—	71-106
Secondary Air Injection Pump Bolt	8-12	—	71-106

Official Licensed Product
Ford Motor Company

SECTION 303-12 Intake Air

VEHICLE APPLICATION: Mark VIII

SUBJECT	PAGE
DESCRIPTION AND OPERATION	
Intake Air System	303-12-2
DIAGNOSIS AND TESTING	
Intake Air System	303-12-3
REMOVAL AND INSTALLATION	
Air Cleaner Element	303-12-6
Air Cleaner Outlet Tube	303-12-4
Engine Air Cleaner	303-12-5
SPECIFICATIONS	303-12-7

Official Licensed Product
Ford Motor Company

DESCRIPTION AND OPERATION

Intake Air System

Component Locations

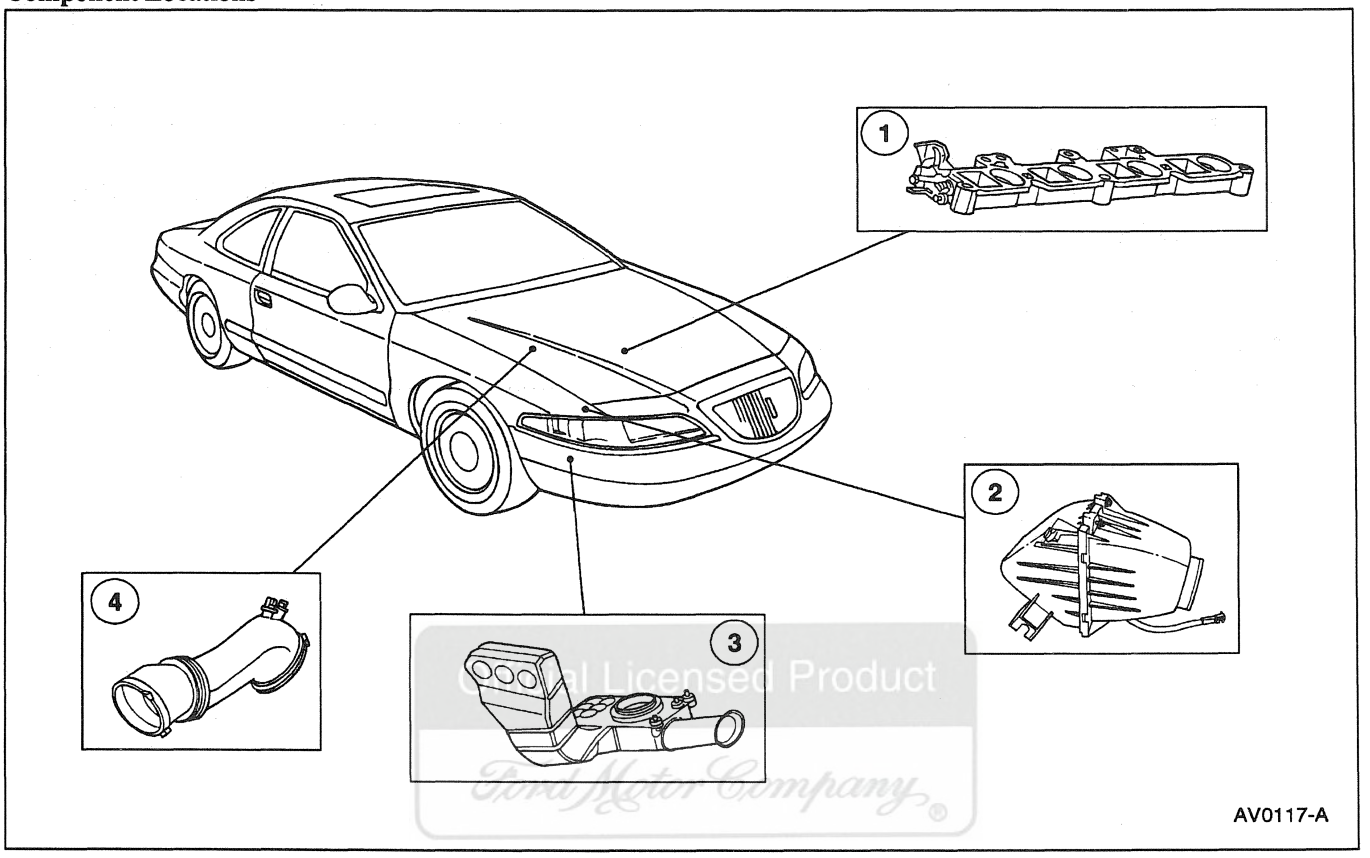

Item	Part Number	Description
1	—	Intake Manifold Runner Control (IMRC)
2	9600	Engine Air Cleaner

(Continued)

Item	Part Number	Description
3	9B659	Engine Air Intake Resonator and Tube Assembly
4	9B659	Air Cleaner Outlet Tube

NOTE: All engines are equipped with a replaceable dry-type air cleaner element (ACL element)(9601).

The intake air system performs the following functions:

- supplies clean air to the throttle body (9E926)
- allows outside air to enter from an air cleaner outlet tube (9B659) , through an opening in the inner fender to the engine air cleaner (ACL)(9600)
- filters air through the air cleaner element
- from the engine air cleaner , the filtered air travels through the mass air flow sensor (MAF sensor)(12B579) , located inside of the engine air cleaner and air cleaner outlet tube and into the throttle body.
- supplies clean air to the positive crankcase ventilation (PCV) system through a fitting on the air cleaner outlet tube

DESCRIPTION AND OPERATION (Continued)

- effectively eliminates air induction noise by means of the sealed and tuned resonator chambers located in the air cleaner intake resonator and the engine intake air resonator.

Air Cleaner Element

The air cleaner element is:

- a dry-type air cleaner element
- a chemically-treated, pleated paper air cleaner element which permits air flow through the intake air system, filtering out unwanted dust, dirt and debris.

Intake Manifold Runner Control (IMRC)

The intake air system improves engine performance by using the intake manifold runner control (IMRC) assemblies as follows:

- The intake manifold (9424) has two runners per cylinder, feeding each of the intake ports in the cylinder heads (6049).
- The IMRC assemblies are located between the intake manifold and cylinder heads, providing two air passages for each cylinder.
- One air passage is always open and the other passage switches from closed to open by means of a valve plate.
  - — Below 3000 rpm, this valve plate is closed to improve low speed and cold engine performance.
  - — Above 3000 rpm, this valve plate opens to improve high speed engine performance.

The valve plates are opened and closed by the IMRC vacuum actuator, which is controlled by the IMRC solenoid and the powertrain control module (PCM)(12A650).

Below 3000 rpm:

- the solenoid is de-energized.
- the vacuum actuator holding the valve plate closed is vented.
- the spring-loaded vacuum actuator pushes the valve plate open.

Refer to Intake Manifold—Upper, Lower and IMRC in Section 303-01 for removal and installation procedure.

Official Licensed Product
Ford Motor Company

DIAGNOSIS AND TESTING

Intake Air System

Refer to the Powertrain Control/Emissions Diagnosis Manual [1].

1 Can be purchased as a separate item.

REMOVAL AND INSTALLATION

Air Cleaner Outlet Tube

Removal

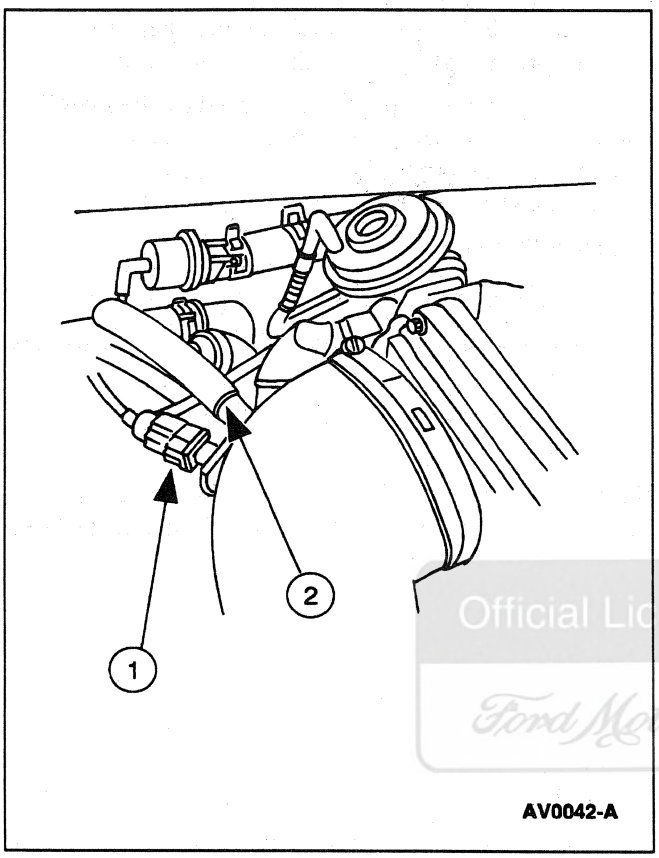

1. Remove the crankcase ventilation tube (6758) and the connector.
   1 Disconnect the connector from the intake air temperature sensor (IAT sensor)(12A697).
   2 Remove the crankcase ventilation tube from the air cleaner outlet tube (9B659).

Official Licensed Product
Ford Motor Company

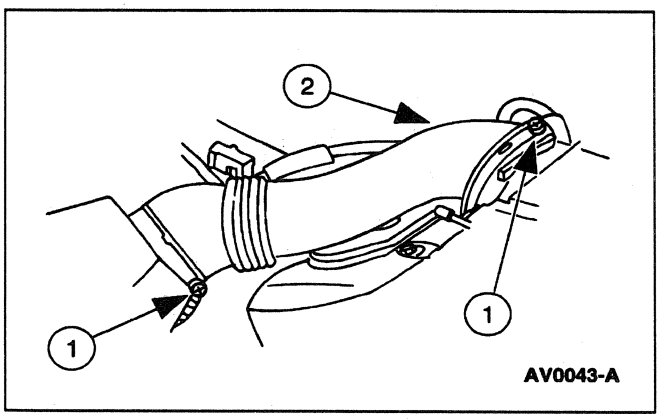

2. Remove the air cleaner outlet tube.
   1 Loosen the engine air cleaner tube clamp at the throttle body (9E926).
   2 Loosen the engine air cleaner tube clamp (9C632) from the air cleaner.
   3 Remove air cleaner outlet tube from the vehicle.

REMOVAL AND INSTALLATION (Continued)

Installation

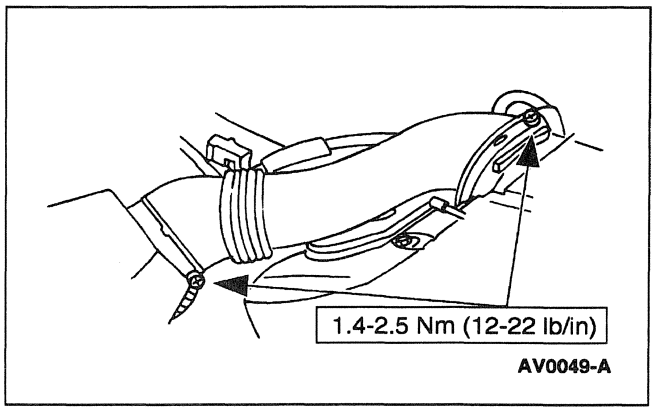

1. Follow the removal procedure in reverse order.

Engine Air Cleaner

Removal

Official Licensed Product
Ford Motor Company

1. Remove the air cleaner outlet tube (9B659); refer to Air Cleaner Outlet Tube in this section.

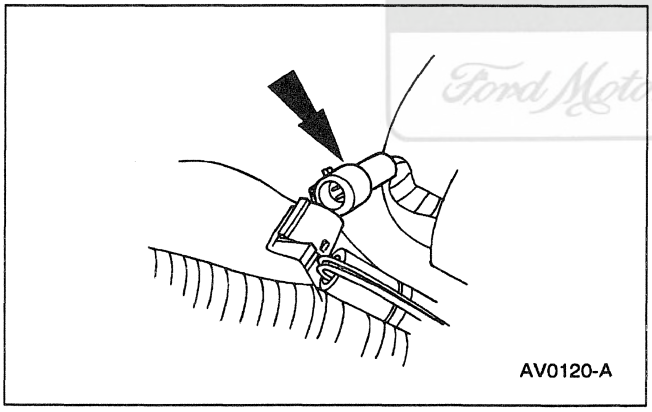

2. Disconnect the mass air flow sensor engine control sensor extension wiring (12A690).

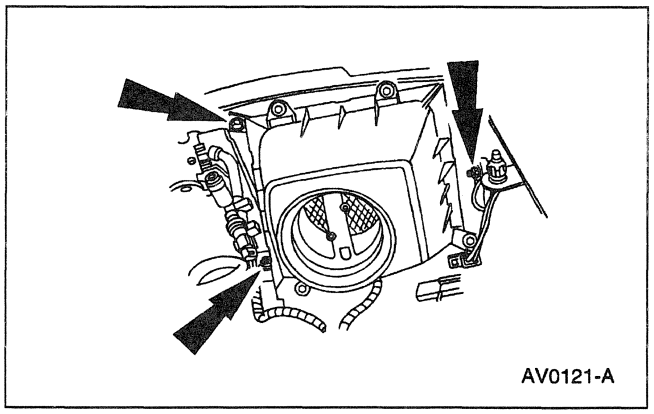

3. Remove the bolts and nuts from the engine air cleaner (ACL)(9600).

4. Clean the engine air cleaner with compressed air.

REMOVAL AND INSTALLATION (Continued)

5. Inspect the engine air cleaner for distortion or damage at the gasket mating surfaces. Replace as required.

Installation

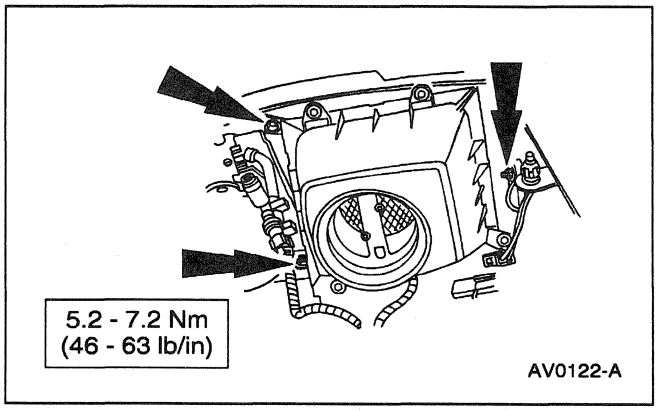

1. Follow the removal procedure in reverse order.

Air Cleaner Element

Removal

Official Licensed Product
Ford Motor Company

1. Remove the air cleaner outlet tube (9B659); refer to Air Cleaner Outlet Tube in this section.

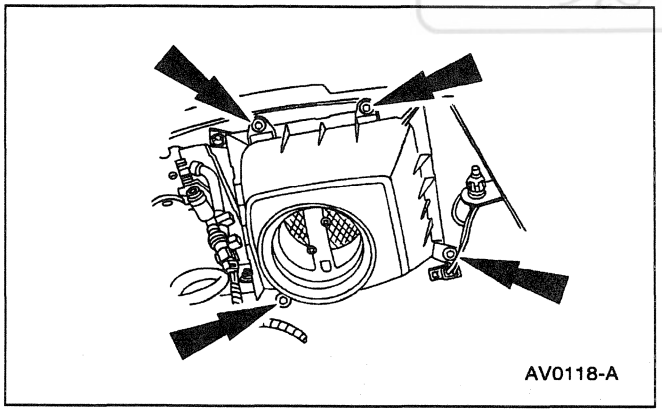

2. Remove the bolts from the engine air cleaner (ACL)(9600).

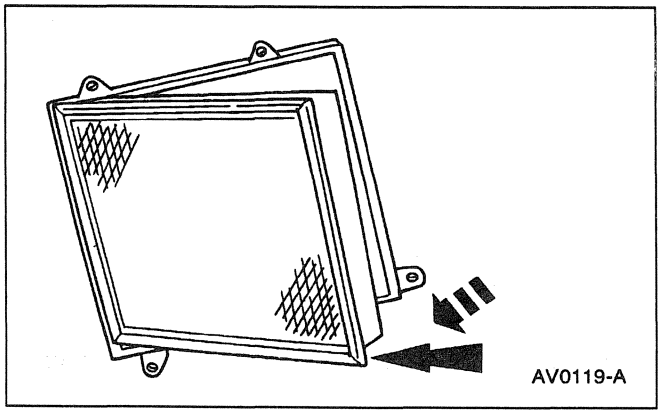

3. Remove the air cleaner element (ACL element)(9601).

REMOVAL AND INSTALLATION (Continued)

4. ⚠ **CAUTION: Cleaning the air cleaner element is not recommended.**

   Refer to the Maintenance Schedule for the recommended air cleaner element maintenance mileage intervals. The air cleaner element should be replaced at the specified mileage intervals.

5. Visually inspect the air cleaner element for signs of dust or dirt leaking through holes in the filter media or past the sealing edges. Even the smallest hole is cause for replacement.

Installation

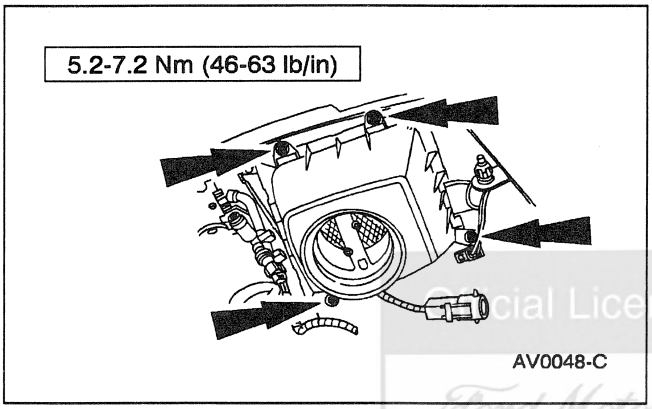

1. Follow the removal procedure in reverse order.

Special Licensed Product
Ford Motor Company

SPECIFICATIONS

Torque Specifications

Description	Nm	Lb/In
Air Cleaner Cover Bolts	5.2-7.2	46-63
Engine Air Cleaner Outlet Tube Clamps	1.4-2.5	12-22

SECTION 303-13 Evaporative Emissions

VEHICLE APPLICATION: Mark VIII

SUBJECT	PAGE
DESCRIPTION AND OPERATION	
Evaporative Emission System	303-13-2
DIAGNOSIS AND TESTING	
Evaporative Emission System	303-13-4
REMOVAL AND INSTALLATION	
Canister — Evaporative Emission	303-13-5
Canister Purge — Valve	303-13-6
Valve — Evaporative Emission Fuel Tank Pressure Control Valve	303-13-6
SPECIFICATIONS	303-13-8

Official Licensed Product
Ford Motor Company

DESCRIPTION AND OPERATION

Evaporative Emission System

Component Location

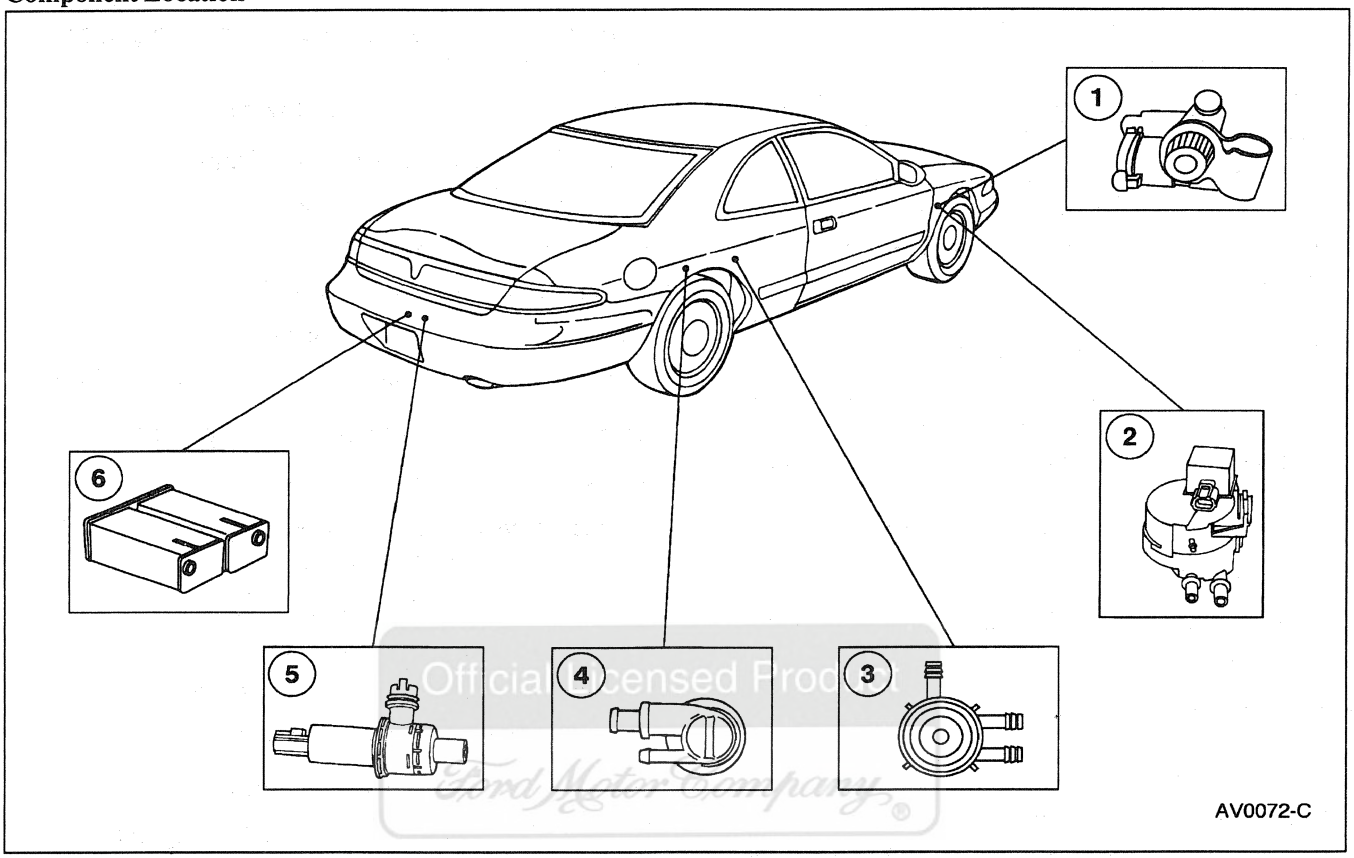

Item	Part Number	Description
1	9F980	Evaporative Emission Service Port
2	9C915	Evaporative Emission Canister Purge Valve
3	9G332	Evaporative Emission Tube Shut Off Valve
4	9B593	Evaporative Emission Valve
5	9F945	Canister Vent Solenoid
6	9D653	Evaporative Emissions Canister

(Continued)

As a part of the fuel system, all vehicles are equipped with fuel vapor evaporative emission control systems to meet federal requirements in effect at the time of production.

The fuel tank evaporative emission system allows for controlled release of fuel tank pressure through the evaporative emissions canister (EVAP canister)(9D653) . Under normal operating conditions, this system will allow sufficient venting to prevent a build-up of internal fuel tank pressure.

Some operating conditions may cause temporary build-up of internal fuel tank pressure. Some of these conditions are:

- parking the vehicle after filling the fuel tank (9002) on warm or hot days. The fuel is cool from underground storage and expands rapidly when warmed.

DESCRIPTION AND OPERATION (Continued)

- parking after driving over rough roads, washboard or other harsh surfaces, after filling the fuel tank; agitation of fuel increases expansion.
- parking after driving long distances in high-temperature conditions.
- climbing long grades, especially while towing a trailer or while vehicle is fully loaded.

No service is required if these conditions caused the concern. A blocked fuel tank evaporative emission system can cause abnormal fuel tank pressure and must be service.

A normally functioning fuel tank evaporative emission system will relieve the pressure build-up.

Most components of the evaporative emission control system are serviced by a simple nut, bolt or screw for component removal and installation. If pushpins are removed, they must be replaced with new pins. Refer to system illustration for specific component location.

Fill Control Vent System

Fill control and fuel vapor venting is accomplished by the following:

- There is a vent line attached to the top of the fuel tank filler pipe (9034) and two fittings located at the top rear of the fuel tank.
- During refueling as the fuel level rises to cover the fill vents, pressure rises in the fuel tank causing fuel to back up and shut off the fuel dispensing nozzle.
- The evaporative emission valves (9B593) are mounted in the top panel of the fuel tank. The evaporative emission hose attached to the evaporative emissions canister also contributes to fill control by controlling pressure in the fuel tank .
- The vent system is designed to provide an air space, approximately 10 percent of the fuel tank volume, above the fuel level in a full fuel tank.
- The air space allows for thermal expansion of fuel and provides clearance between the fuel level and the evaporative emission valve which is mounted in the top panel of the fuel tank.
- Fuel vapors in the sealed fuel tank are vented through the evaporative emission valves to the evaporative emissions canister.
- The clearance is sufficient to allow fuel vapor venting through the evaporative emission valves under all static and most dynamic vehicle conditions.

System Components—Fuel Tank Evaporative Emission System

This system consists of the following:

- sealed fuel tank and fuel tank filler pipe
- vacuum relief fuel tank filler cap (9030)
- evaporative emission valves
- evaporative emission tube (9K313)
- evaporative emissions canister
- evaporative emission tube shut off valve (9G332)

Engine Evaporative Emission System

This system consists of the following:

- evaporative emission canister purge valve (EVAP canister purge valve)(9C915)
- fuel and vapor return tube (9J279)
- evaporative emissions canister
- evaporative emissions canister assembly
- evaporative emissions service port

Evaporative Emission Canister

The fuel vapor is emitted through the evaporative emission valves and is stored in a carbon-filled evaporative emissions canister. Vapors from the evaporative emissions canister are vented through tubes and hoses to the engine.

Evaporative Emission Hose

The evaporative emission hose transmits stored fuel vapor from the evaporative emissions canister through the evaporative emission canister purge valve to the engine.

Evaporative Emission Canister Purge Valve

The evaporative emission canister purge valve :

- is in-line with the evaporative emissions canister
- controls the flow of fuel vapors out of the evaporative emissions canister

Official Licensed Product
Ford Motor Company®

DESCRIPTION AND OPERATION (Continued)

- is normally closed. When the engine is shut OFF, vapors from the fuel tank flow into the evaporative emissions canister. After the engine is started, the evaporative emission canister purge valve is engaged and opens, purging the fuel vapors into the engine. With the evaporative emission canister purge valve open, vapors from the fuel tank are routed directly into the engine.

Pressure and Vacuum Relief System—Fuel Tank Filler Cap

The fuel tank filler cap is a sealed cap with a built-in vacuum relief valve and:

- fuel system vacuum relief is provided after negative 1.7 kPa (0.25 psi)
- under normal operating conditions, the fuel tank filler cap operates as a check valve, allowing air to enter the fuel tank as fuel is used, while preventing fuel vapors from escaping the fuel tank through the fuel tank filler cap.

Evaporative Emission Tube

The fuel tank vent tube (9A228) transmits stored fuel vapor from the evaporative emissions canister to the fuel and vapor return tube . Fuel vapor then travels through the evaporative emission canister purge valve and to the engine by the evaporative emission return tube (9G271) .

Evaporative Emission Fuel Tank Pressure Control Valve

The evaporative emission tube shut off valve :

- is located in-line between the evaporative emission valve and the evaporative emissions canister.
- is mounted on the fuel tank by a bracket.
- closes the flow path from the evaporative emission valve to the evaporative emissions canister during refueling to prevent over filling of the fuel tank.
- is serviced as an assembly with the evaporative emission valve; refer to Section 310-01 for Removal and Installation procedures.

Evaporative Emission Valve

- The evaporative emission valve uses a small orifice and shutoff valve to allow only fuel vapor, not liquid, to pass into the evaporative emission hose routed forward to the evaporative emissions canister.
- The evaporative emission valves are mounted in a rubber grommet at both corner locations in the upper surface of the fuel tank.

The evaporative emission valve operates as follows:

- Fuel vapors in the sealed fuel tank are vented through the evaporative emission valve in the top of the fuel tank . The vapors are transmitted through a single vapor hose to evaporative emissions canister at the back of the vehicle.
- A spring-loaded poppet valve in the evaporative emission valve provides pressure relief ahead of the orifice to evaporative evaporative emissions canister.

Canister Vent Valve

The canister vent solenoid valve:

- seals the evaporative emissions systems for the OBD II leak test.
- is mounted on the evaporative emissions canister.
- is serviced as a separate item.

DIAGNOSIS AND TESTING

Evaporative Emission System

Refer to the Powertrain Control/Emissions Diagnosis Manual [1].

1 Can be purchased as a separate item.

REMOVAL AND INSTALLATION

Canister — Evaporative Emission

Removal

1. Raise the vehicle on hoist; refer to Section 100-02.

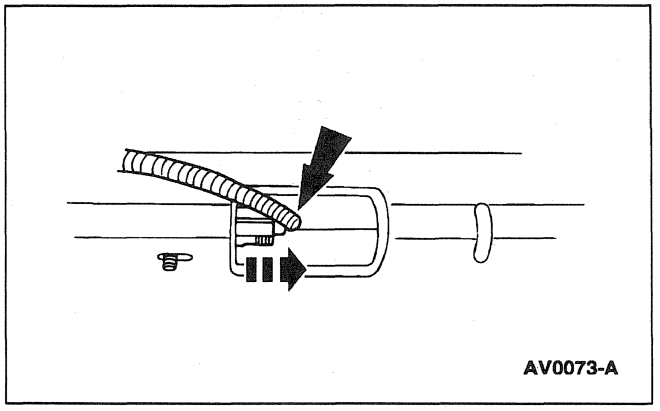

2. Disconnect the electrical connector from the evaporative emission canister vent solenoid.

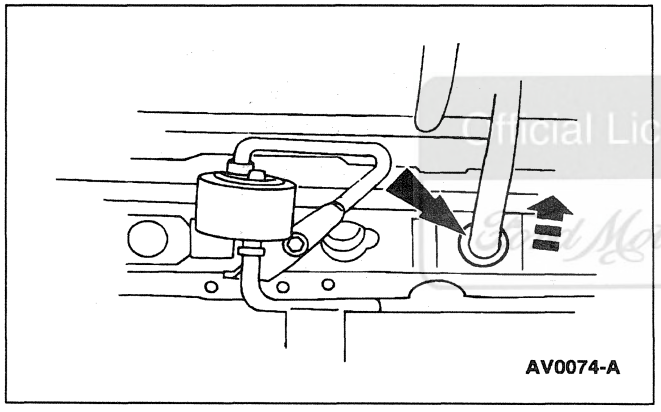

3. Disconnect the evaporative emission canister hose.

Official Licensed Product
Ford Motor Company

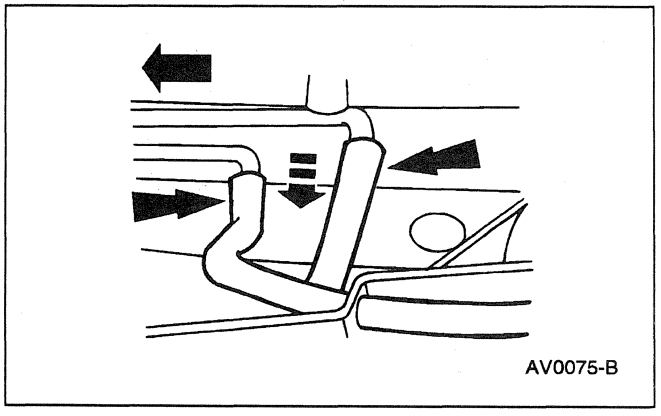

4. Disconnect the evaporative emission hoses (9G297) from fuel tank vent tubes.

REMOVAL AND INSTALLATION (Continued)

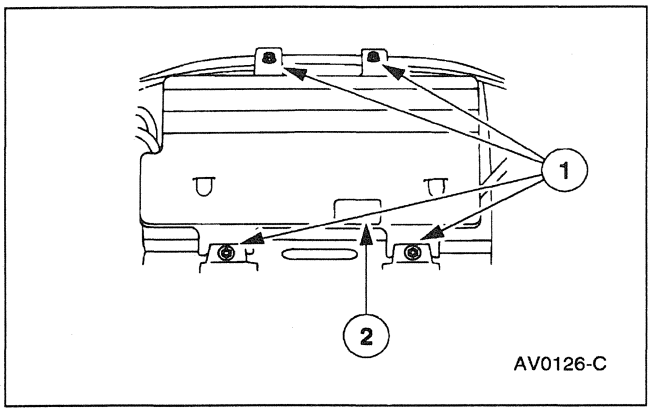

5. Remove the evaporative emissions canister (EVAP canister)(9D653).
   1 Remove the bolts.
   2 Remove the evaporative emissions canister from the vehicle.

Installation

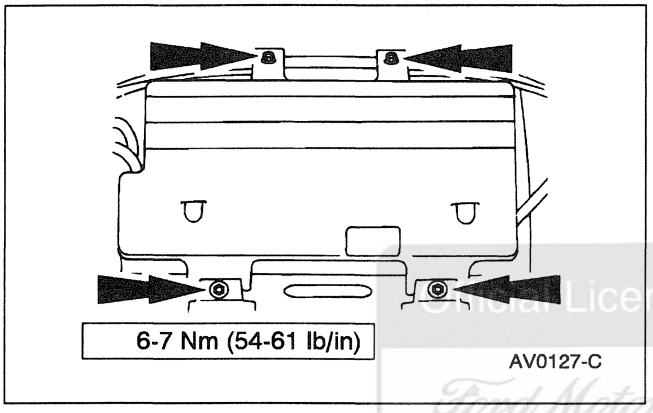

1. Follow the removal procedure in reverse order.

Ford Motor Company Licensed Product

Valve — Evaporative Emission Fuel Tank Pressure Control Valve

1. The evaporative emission tube shut off valve (9G332) is serviced as an assembly with the evaporative emission valves (9B593); refer to Section 310-01.

Canister Purge — Valve

Removal

1. Remove the front fender splash shield (16102).

REMOVAL AND INSTALLATION (Continued)

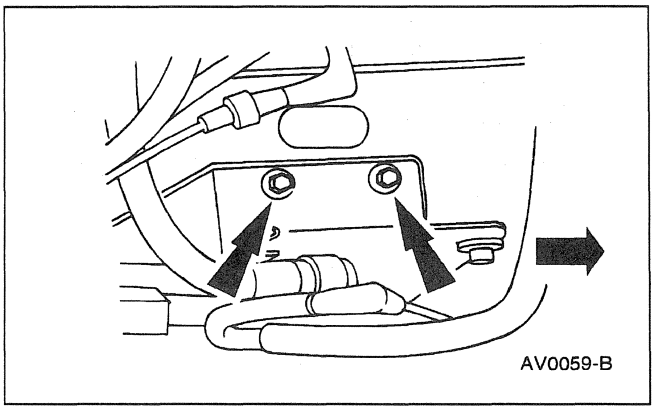

2. Remove the bolts from the canister purge valve bracket.

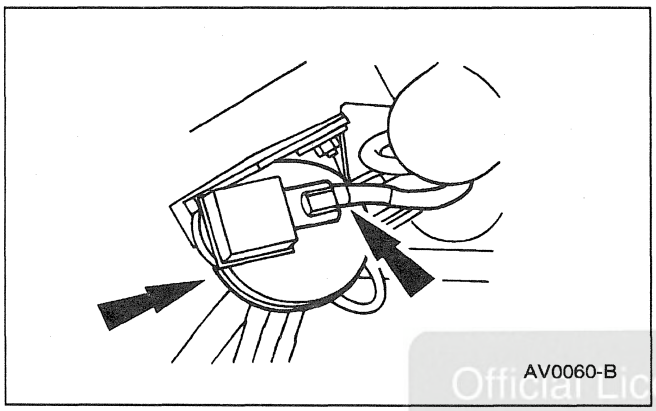

3. Disconnect the connector from the evaporative emission canister purge valve (EVAP canister purge valve)(9C915).

Official Licensed Product
Ford Motor Company

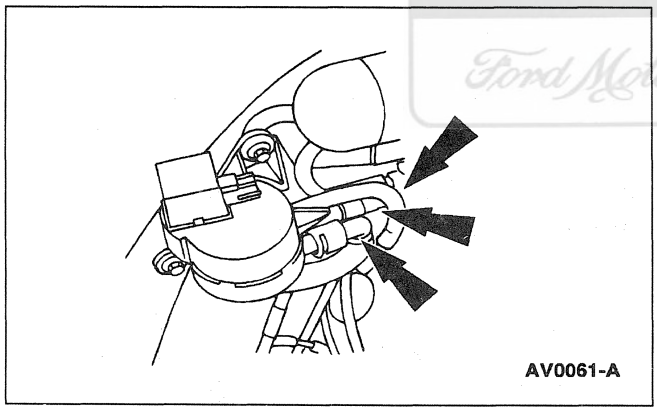

4. Disconnect three hoses from the evaporative emission canister purge valve.

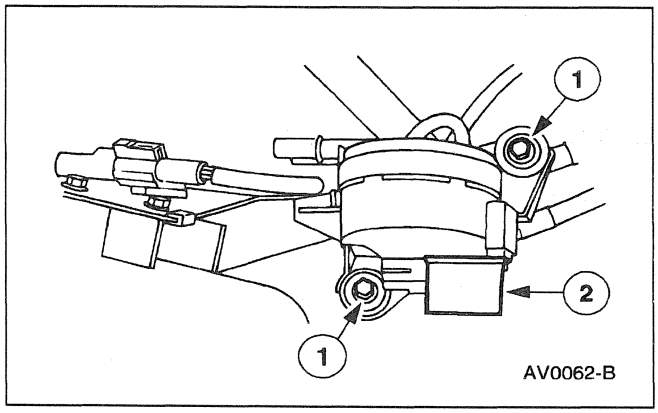

5. Remove the evaporative emission canister purge valve.
   1 Remove the bolts from the evaporative emission canister purge valve.
   2 Remove the evaporative emission canister purge valve from the vehicle.

REMOVAL AND INSTALLATION (Continued)

Installation

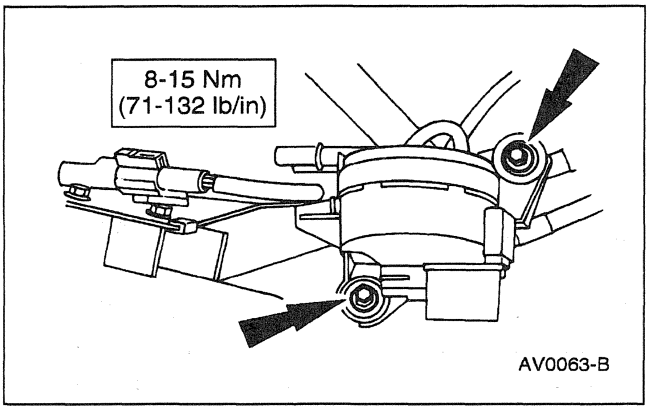

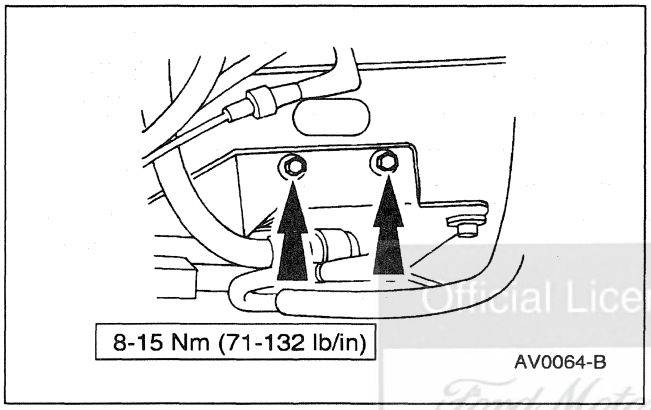

1. Follow the removal procedure in reverse order.

Official Licensed Product
Ford Motor Company

SPECIFICATIONS

Torque Specifications

Description	Nm	Lb/In
Evaporative Emission Canister Retaining Bolt	6-7	54-61
Evaporative Emission Canister Purge Valve Retaining Bolt	8-15	71-132
Evaporative Emission Canister Purge Valve Bracket	8-15	71-132

SECTION 303-14 Electronic Engine Controls

VEHICLE APPLICATION: Mark VIII

SUBJECT	PAGE
DESCRIPTION AND OPERATION	
Electronic Engine Control	303-14-2
DIAGNOSIS AND TESTING	
Electronic Engine Control	303-14-4
REMOVAL AND INSTALLATION	
Camshaft Position (CMP) Sensor	303-14-4
Crankshaft Position (CKP) Sensor	303-14-6
Engine Coolant Temperature (ECT) Sensor	303-14-11
Fuel Pressure Sensor	303-14-19
Heated Oxygen Sensor (HO2S)	303-14-16
Idle Air Control (IAC) Valve	303-14-10
Intake Air Temperature (IAT) Sensor	303-14-15
Knock Sensor (KS)	303-14-17
Mass Air Flow (MAF) Sensor	303-14-13
Powertrain Control Module (PCM	303-14-8
Throttle Position (TP) Sensor	303-14-9
SPECIFICATIONS	303-14-20

Official Licensed Product
Ford Motor Company

DESCRIPTION AND OPERATION

Electronic Engine Control

The electronic engine controls consist of the components shown in the following illustration. For further component description and operation; refer to the Powertrain Control/Emissions Diagnosis Manual [1].

Official Licensed Product
Ford Motor Company

1 Can be purchased as a separate item.

DESCRIPTION AND OPERATION (Continued)

Component Locations

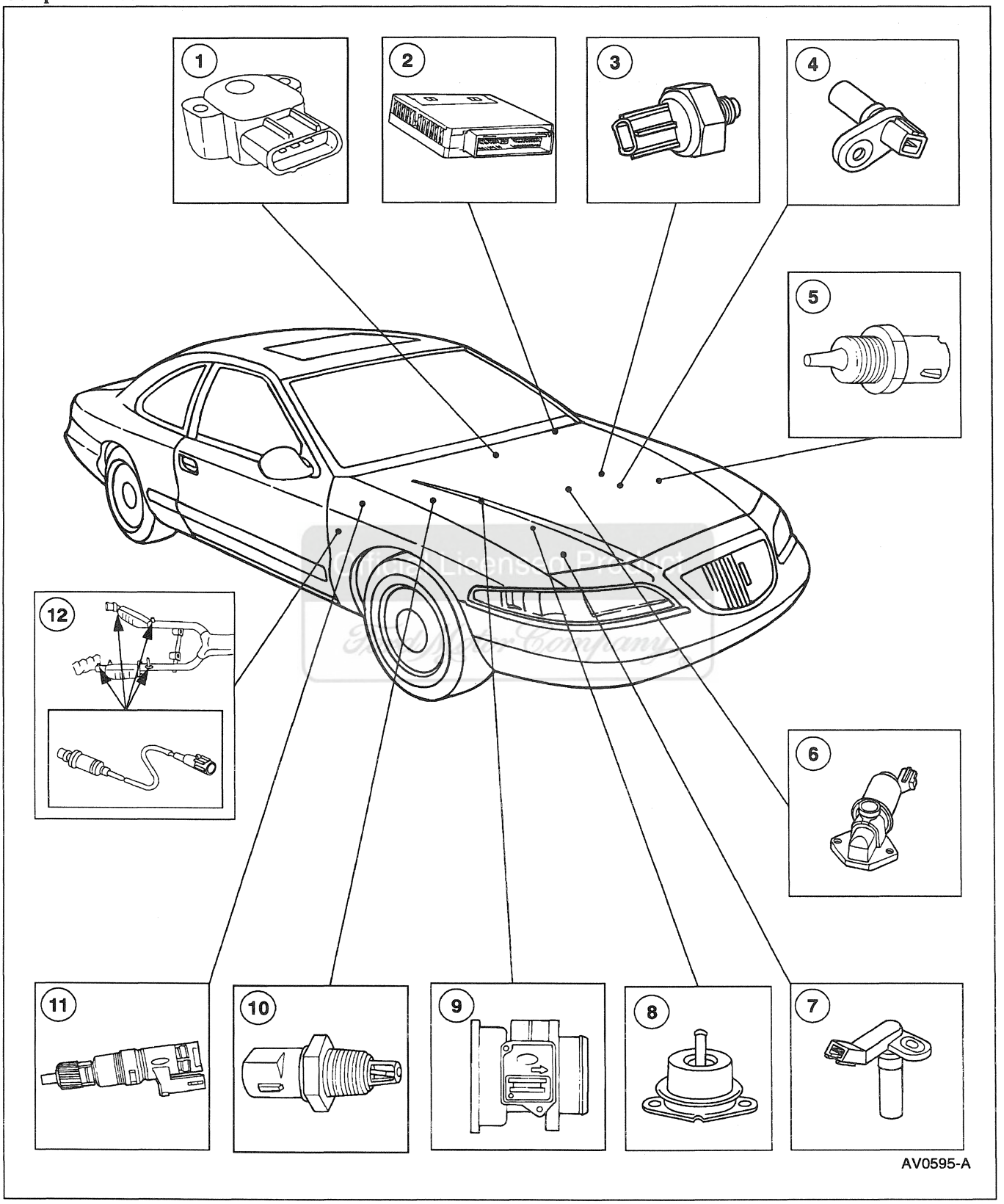

DESCRIPTION AND OPERATION (Continued)

Item	Part Number	Description
1	9B989	Throttle Position Sensor
2	12A650	Powertrain Control Module
3	12A699	Knock Sensor
4	6B288	Camshaft Position Sensor
5	12A648	Engine Coolant Temperature Sensor
6	9F715	Idle Air Control Valve

(Continued)

Item	Part Number	Description
7	6C315	Crankshaft Position Sensor
8	—	Fuel Pressure Sensor
9	12B579	Mass Air Flow Sensor
10	12A697	Intake Air Temperature Sensor
11	9E731	Vehicle Speed Sensor
12	9F472	Heated Oxygen Sensor

DIAGNOSIS AND TESTING

Electronic Engine Control

Refer to the Powertrain Control/Emissions Diagnosis Manual [2].

REMOVAL AND INSTALLATION

Official Licensed Product
Ford Motor Company

Camshaft Position (CMP) Sensor

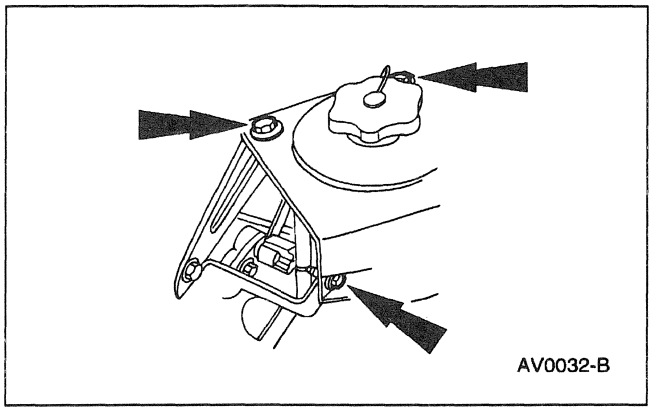

1. Disconnect the battery ground cable (14301).
2. Remove the bolts from the power steering pump reservoir (3E764).

2 Can be purchased as a separate item.

REMOVAL AND INSTALLATION (Continued)

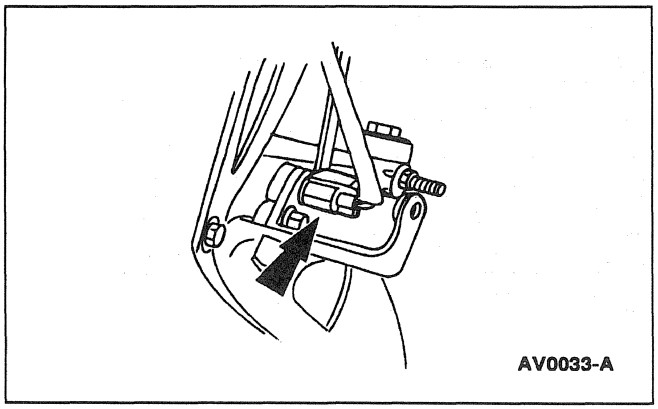

3. Disconnect the engine control sensor wiring (12A581) from the camshaft position sensor (CMP sensor)(6B288).

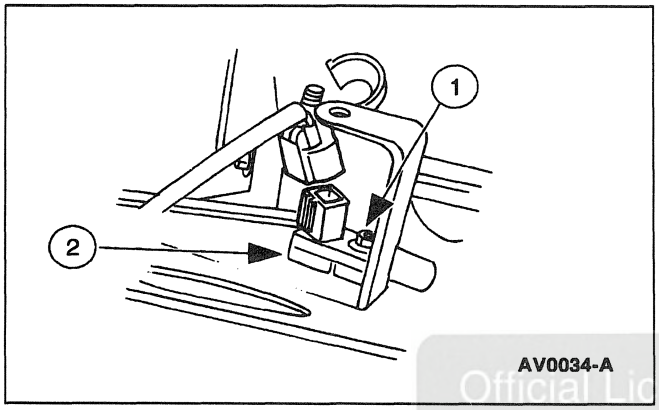

4. Remove the camshaft position sensor.
   1 Remove the bolt from the camshaft position sensor.
   2 Remove the camshaft position sensor from the vehicle.

Official Licensed Product
Ford Motor Company

5. Clean the gasket surface.

Installation

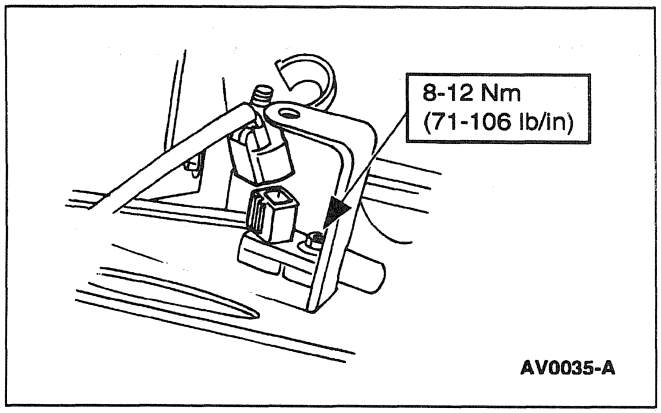

1. **CAUTION: Do not overtighten the screw or damage to camshaft position sensor may occur.**

   Follow the removal procedure in reverse order.

REMOVAL AND INSTALLATION (Continued)

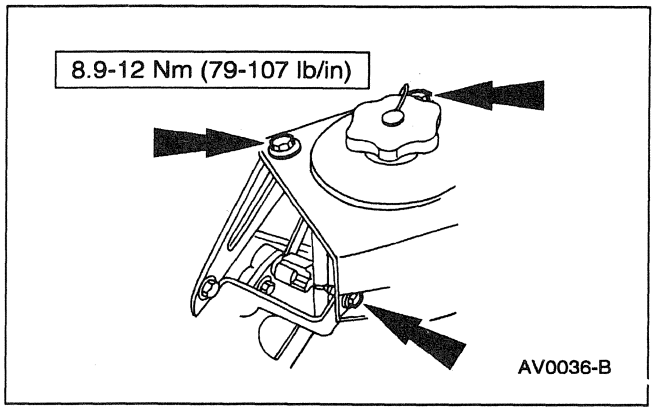

Crankshaft Position (CKP) Sensor

Removal

1. Remove the accessory drive belt (8620); refer to Section 303-05.

2. **WARNING: THE ELECTRICAL POWER TO THE AIR SUSPENSION SYSTEM MUST BE SHUT OFF PRIOR TO HOISTING, JACKING OR TOWING AN AIR SUSPENSION VEHICLE. THIS CAN BE ACCOMPLISHED BY TURNING OFF THE AIR SUSPENSION SWITCH LOCATED IN THE RH KICK PANEL AREA. FAILURE TO DO SO MAY RESULT IN UNEXPECTED INFLATION OR DEFLATION OF THE AIR SPRINGS WHICH MAY RESULT IN SHIFTING OF THE VEHICLE DURING THESE OPERATIONS.**

   Raise and support the vehicle; refer to Section 100-02.

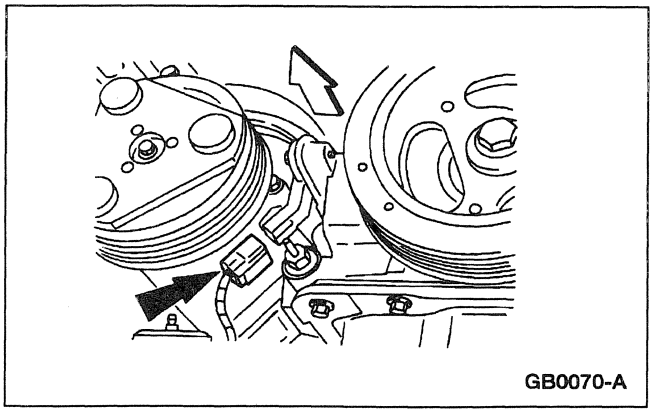

3. Disconnect the crankshaft position (CKP) electrical connector.

Official Licensed Product
Ford Motor Company

REMOVAL AND INSTALLATION (Continued)

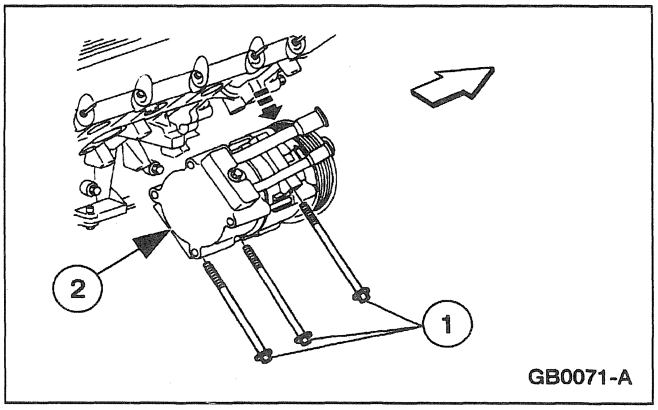

4. **NOTE:** Do not remove lines from the A/C compressor (19703).

   Disconnect the A/C compressor.

   1 Remove the bolts.

   2 Remove the A/C compressor and position aside.

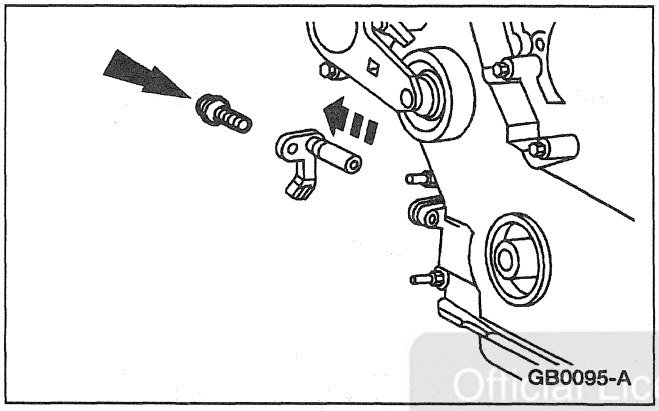

5. Remove the (CKP) sensor bolt and the crankshaft position sensor (CKP sensor)(6C315)

Official Licensed Product
Ford Motor Company

Installation

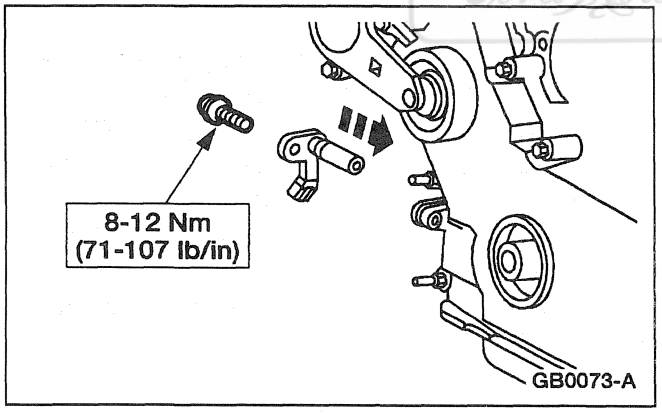

1. Follow the removal procedure in reverse order.

REMOVAL AND INSTALLATION (Continued)

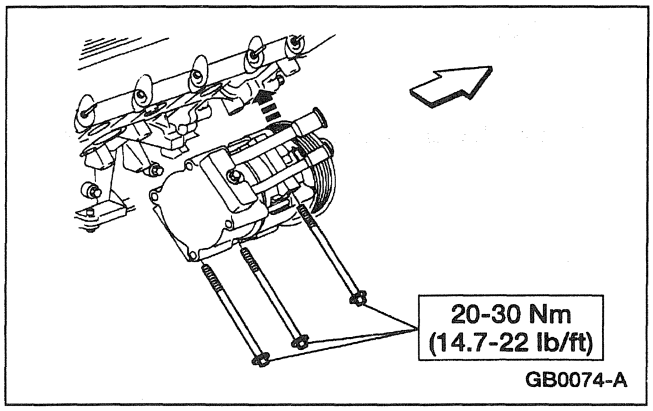

Powertrain Control Module (PCM

Removal

1. Disconnect the battery ground cable (14301).

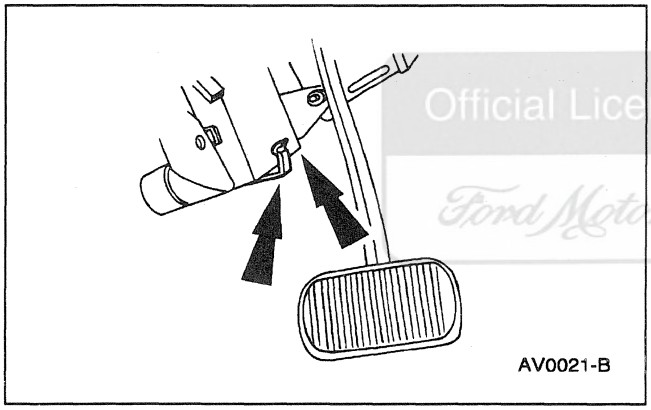

2. Remove the powertrain control module bracket clip (12B518) and slide the powertrain control module (PCM)(12A650) from the powertrain control module bracket support (12B522).

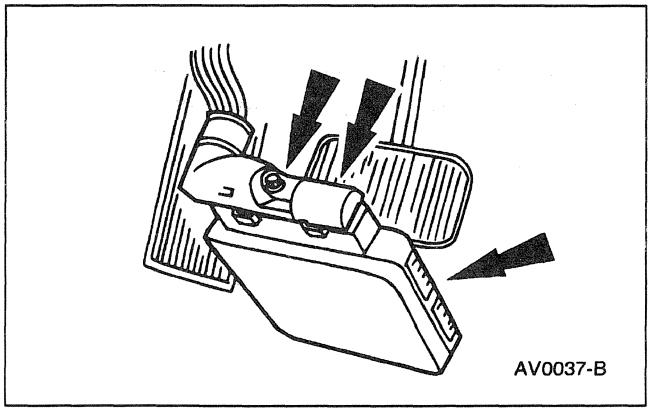

3. Remove the bolt and disconnect the main wiring (14401) from the powertrain control module.

Official Licensed Product
Ford Motor Company

REMOVAL AND INSTALLATION (Continued)

Installation

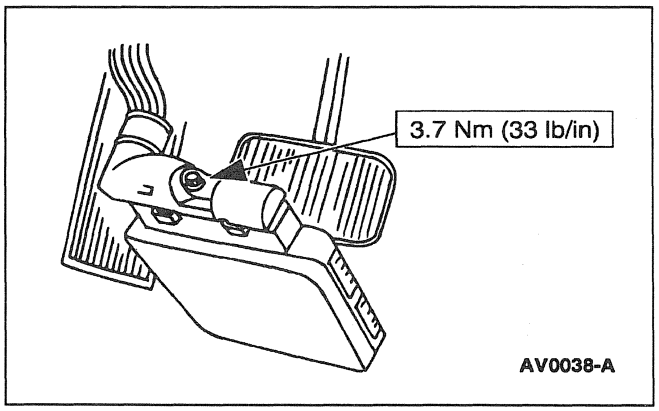

1. Follow the removal procedure in reverse order.

Throttle Position (TP) Sensor

Removal

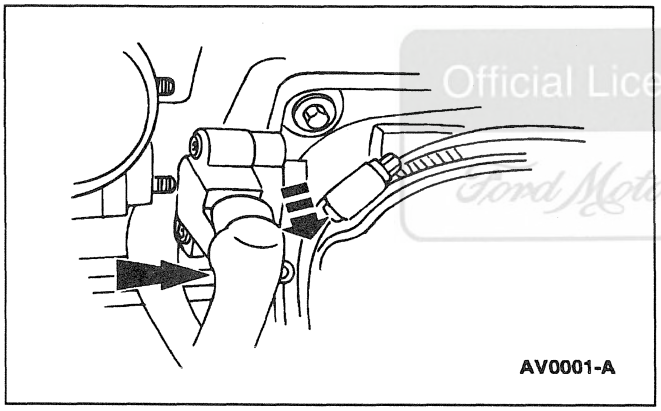

Official Licensed Product
Ford Motor Company

1. Remove the rubber boot.

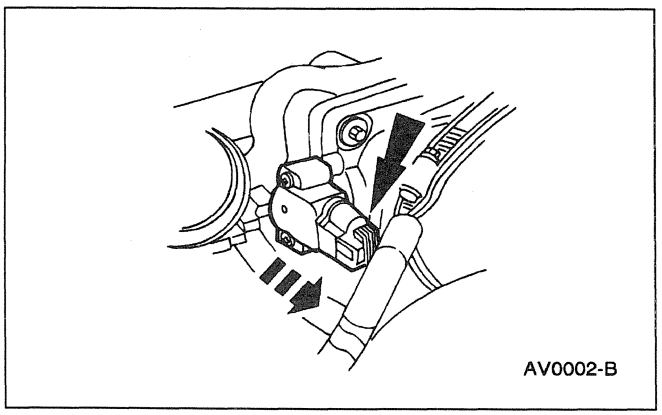

2. Disconnect the connector from the throttle position sensor (TP sensor)(9B989).

REMOVAL AND INSTALLATION (Continued)

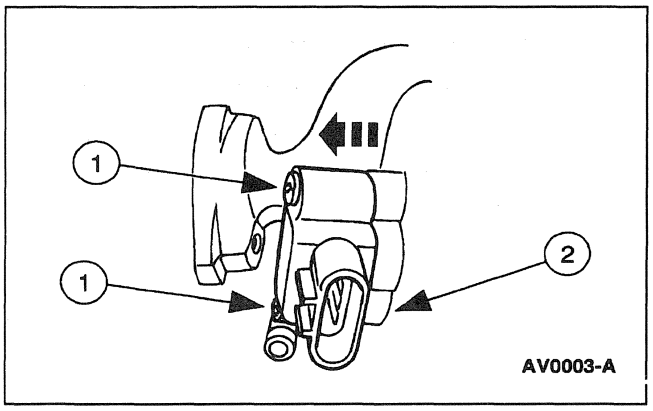

3. Remove the throttle position sensor.
   1 Remove the screws from the throttle position sensor.
   2 Remove the throttle position sensor from the vehicle.

Installation

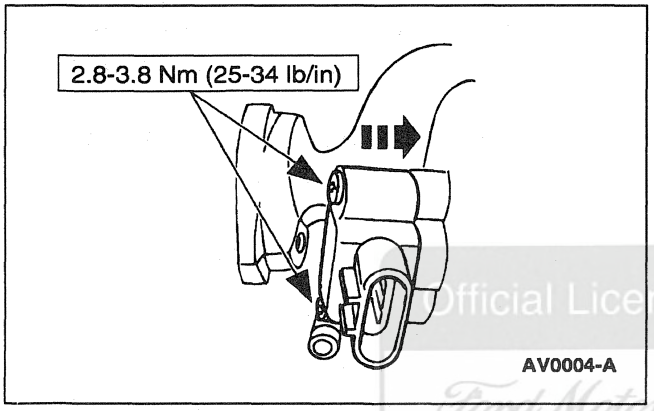

1. **NOTE:** The throttle position sensor cannot be adjusted. If necessary it must be replaced.
   To install a new throttle position sensor, follow the removal procedure in reverse order.

Official Licensed Product
Ford Motor Company

2. Cycle the throttle lever to wide open throttle (WOT). It should return without interference.

Idle Air Control (IAC) Valve

Removal

1. Disconnect the battery ground cable (14301).

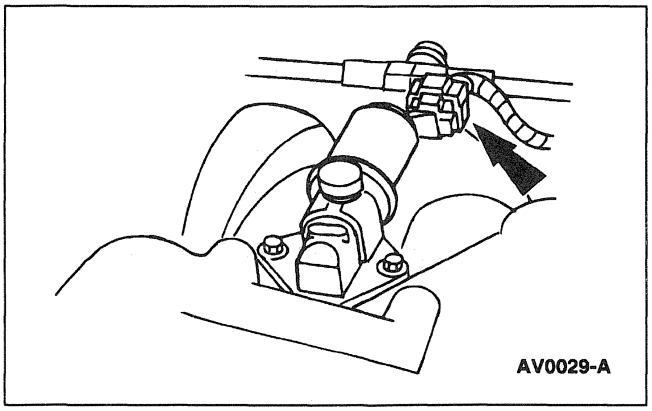

2. Disconnect the connector from the idle air control valve (IAC valve)(9F715).

REMOVAL AND INSTALLATION (Continued)

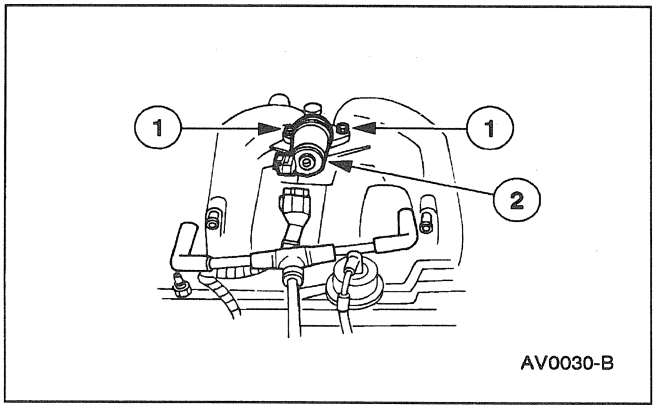

3. Remove the idle air control valve.
   1 Remove the bolts from the idle air control valve.
   2 Lift and remove idle air control valve from the vehicle.

4. ⚠ **CAUTION: Do not use Carburetor Tune-Up Cleaner D9AZ-19579-BA (ESR-M14P9-A) or any other type of solvent as damage to the valve internal components may result.**

   The engine control sensor wiring (12A581) cannot be cleaned. If necessary, it must be replaced.

5. Clean the gasket mating surfaces.

Installation

1. Follow the removal procedure in reverse order.

Official Licensed Product
Ford Motor Company®

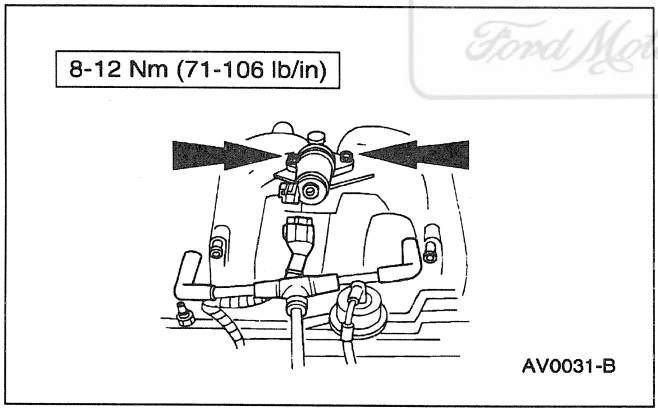

Engine Coolant Temperature (ECT) Sensor

Removal

1. Disconnect the battery ground cable (14301).

2. Partially drain the cooling system; refer to Section 303-03.

REMOVAL AND INSTALLATION (Continued)

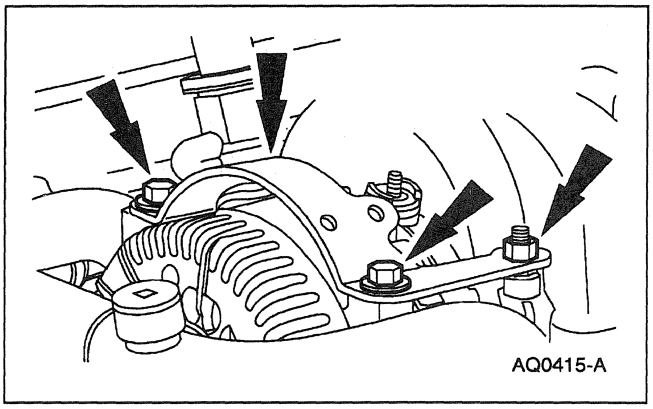

3. Remove the two nuts and the bolts and lift and remove the generator support bracket.

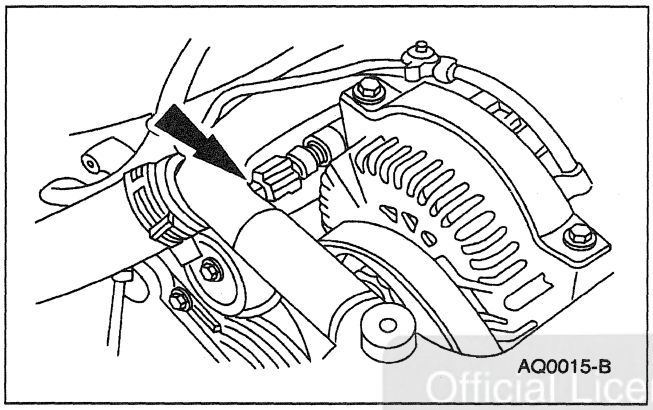

4. Press tab and pull the engine control sensor wiring connector away from the engine coolant temperature sensor (ECT sensor)(12A648).

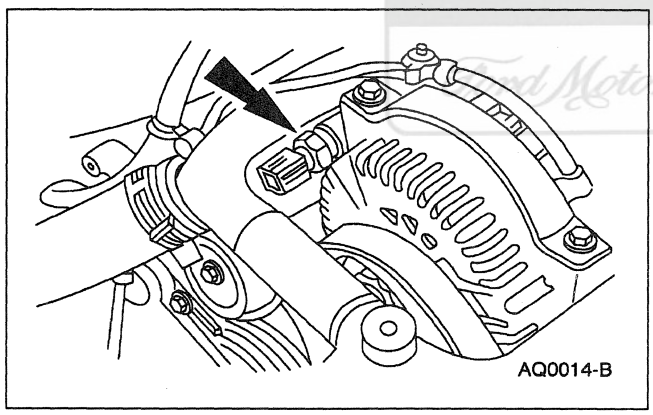

5. Remove the engine coolant temperature sensor from the water bypass tube (8548).

Official Licensed Product
Ford Motor Company®

REMOVAL AND INSTALLATION (Continued)

Installation

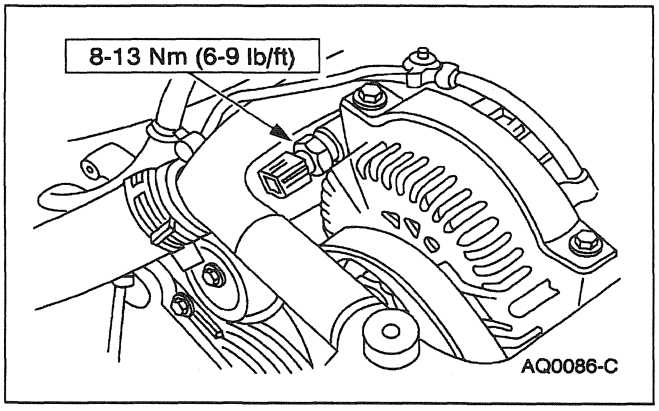

1. Follow the removal procedure in reverse order.

Mass Air Flow (MAF) Sensor

Removal

⚠ **CAUTION: The mass air flow sensor hot wire sensing element and housing are calibrated as a unit and must be serviced as a complete assembly. Do not damage the sensing element (internal to housing) or possible failure of the mass air flow sensor (MAF sensor)(12B579) may occur.**

Official Licensed Parts
Ford Motor Company

1. Disconnect the battery ground cable (14301).

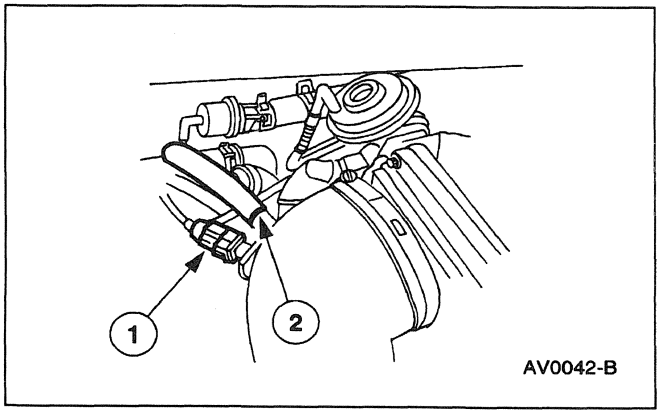

2. Remove the crankcase ventilation tube (6758) and the wire harness from the air cleaner outlet tube (9B659).
   1 Disconnect the harness from the intake air temperature sensor (IAT sensor)(12A697).
   2 Remove the crankcase ventilation tube from the air cleaner outlet tube.

REMOVAL AND INSTALLATION (Continued)

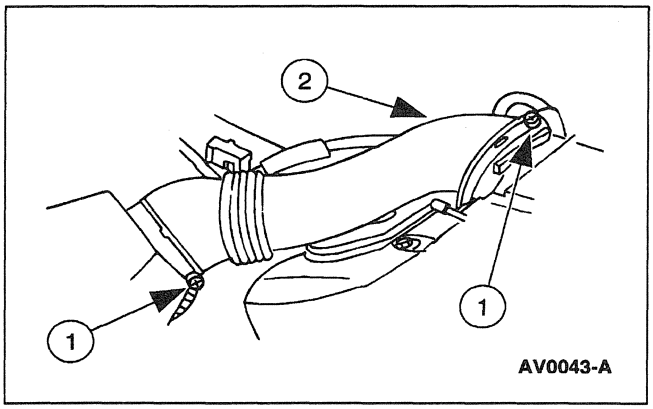

3. Remove the air cleaner outlet tube.
   1 Loosen the screws from the engine air cleaner tube clamp (9C632).
   2 Remove the air cleaner outlet tube.

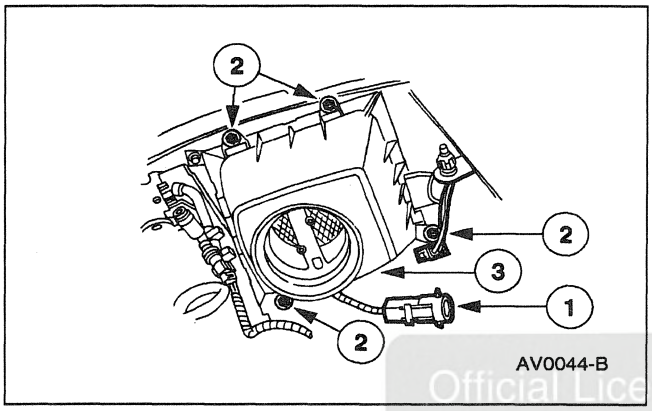

4. Remove the engine air cleaner (ACL)(9600).
   1 Disconnect the engine control sensor extension wiring (12A690) from the connector.
   2 Remove the bolts.
   3 Remove the engine air cleaner from the vehicle.

Official Licensed Product
Ford Motor Company

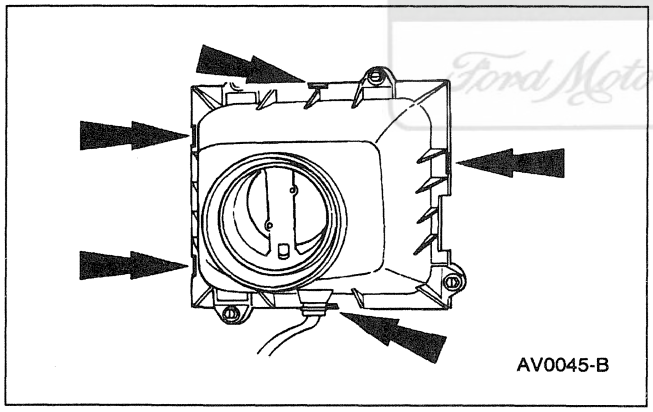

5. Separate the engine air cleaner by inserting a screwdriver in the slots.

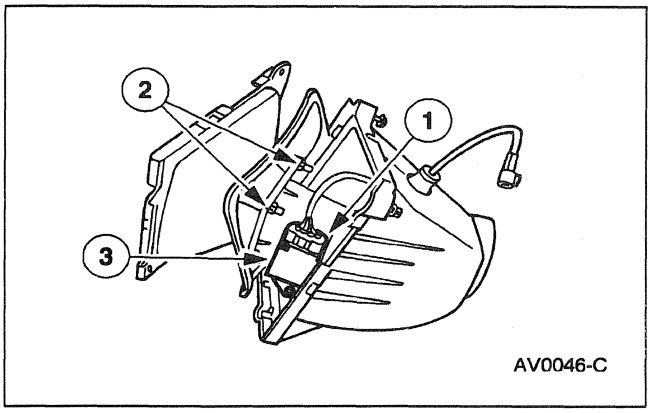

6. Remove the mass air flow sensor.
   1 Disconnect the connector from the mass air flow sensor.
   2 Remove the two nuts which secure the mass air flow sensor to the inner cover.
   3 Remove the mass air flow sensor from the the inner cover. Make sure the gasket between the inner cover and the mass air flow sensor is still positioned correctly on the inner cover.

REMOVAL AND INSTALLATION (Continued)

Installation

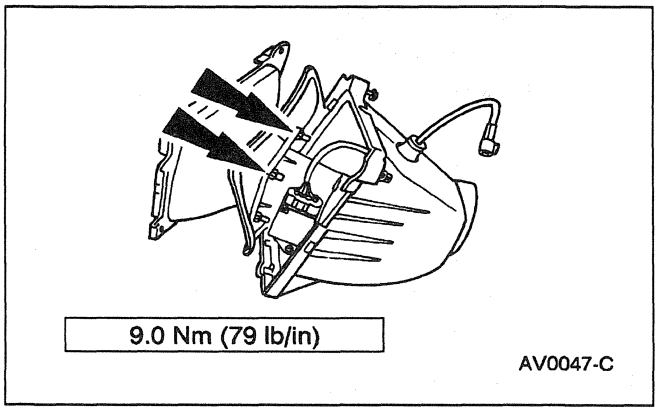

1. Follow the removal procedure in reverse order.

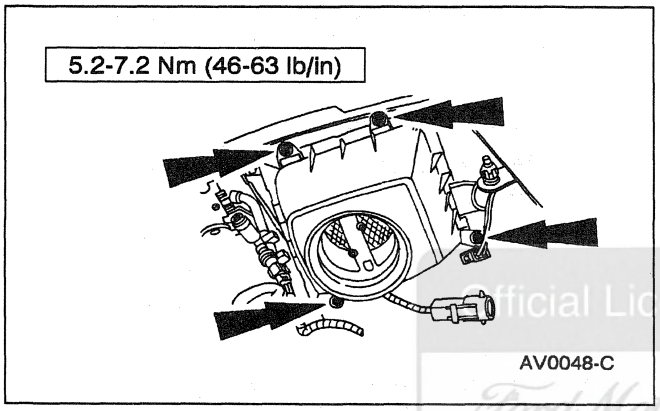

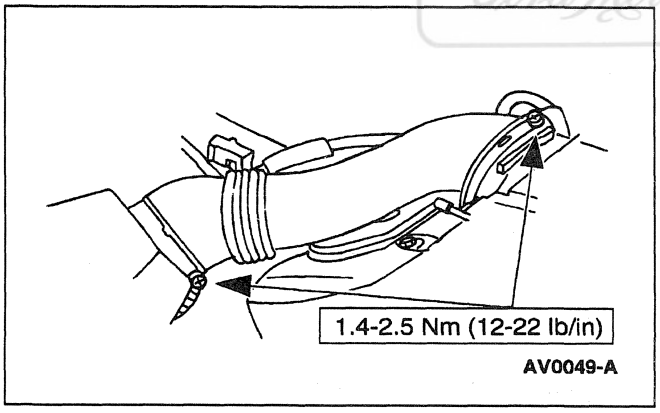

Official Licensed Product
Ford Motor Company

Intake Air Temperature (IAT) Sensor

Removal

1. Remove the battery ground cable (14301).

REMOVAL AND INSTALLATION (Continued)

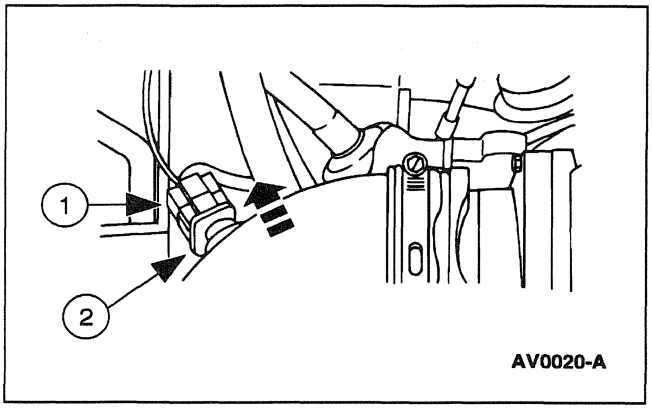

2. Remove the intake air temperature sensor (IAT sensor)(12A697).
   1 Disconnect the wire harness from the intake air temperature sensor.
   2 Remove the intake air temperature sensor from the air cleaner outlet tube (9B659).

3. Inspect the intake air temperature sensor (IAT sensor) O-ring for damage or deterioration. Replace as necessary.

Installation

1. Follow the removal procedure in reverse order.

Official Licensed Content Ford Motor Company

Heated Oxygen Sensor (HO2S)

Special Tool(s)

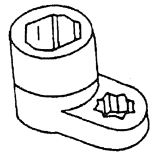 ST1448-A	Oxygen Sensor Wrench 303-476 (T94P-9472-A)

1. Disconnect the battery ground cable (14301).

2. Raise and support the vehicle; refer to Section 100-02.

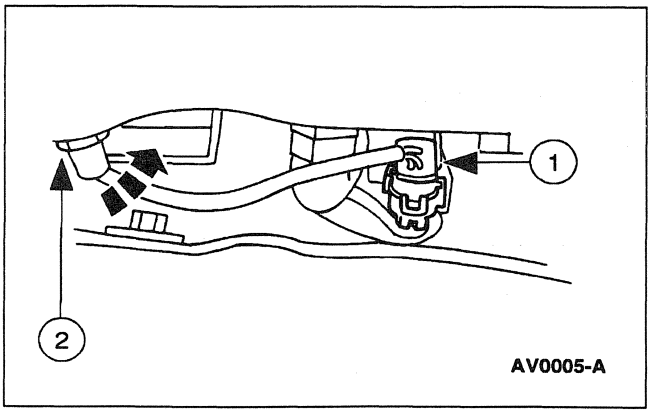

3. Remove the two rear heated oxygen sensors (HO2S)(9F472).
   1 Disconnect the connectors.
   2 Use the Oxygen Sensor Wrench to remove the heated oxygen sensor.

REMOVAL AND INSTALLATION (Continued)

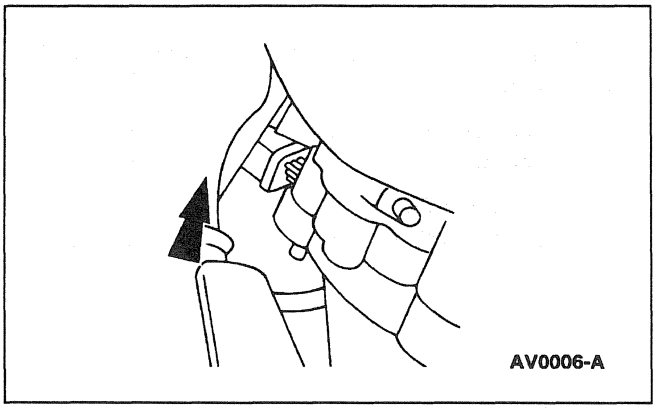

4. Remove the two connectors from the front heated oxygen sensor.

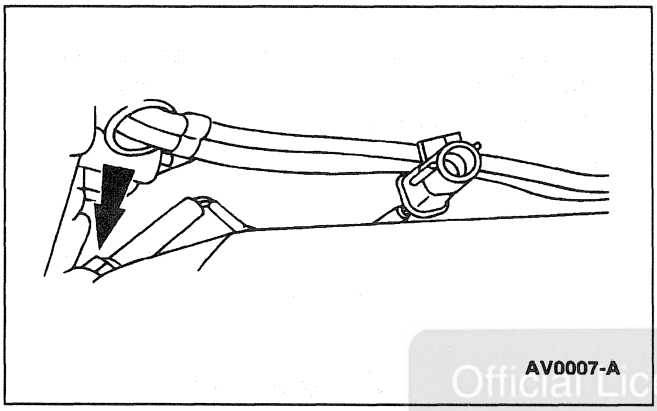

5. Use the Oxygen Sensor Wrench to remove the front heated oxygen sensor.

Official Licensed Product
Ford Motor Company

Installation

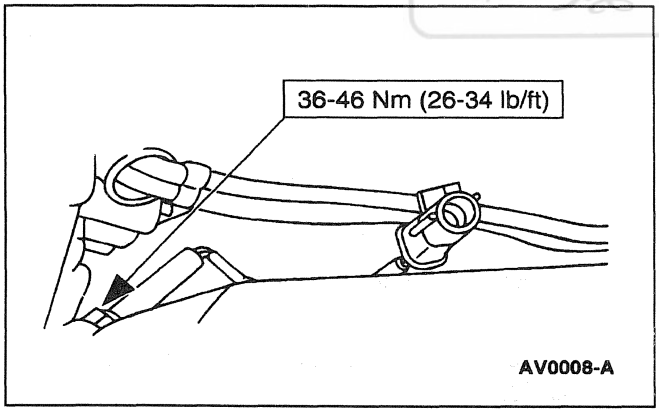

1. Follow the removal procedure in reverse order.

   Apply a light coat of High Temperature Nickel Anti-Seize Lubricant F6AZ-9L494-AA or equivalent meeting Ford specification ESE-M12A4-A to the threads.

Knock Sensor (KS)

Removal

1. Remove the lower intake manifold (9424); refer to Section 303-01.

REMOVAL AND INSTALLATION (Continued)

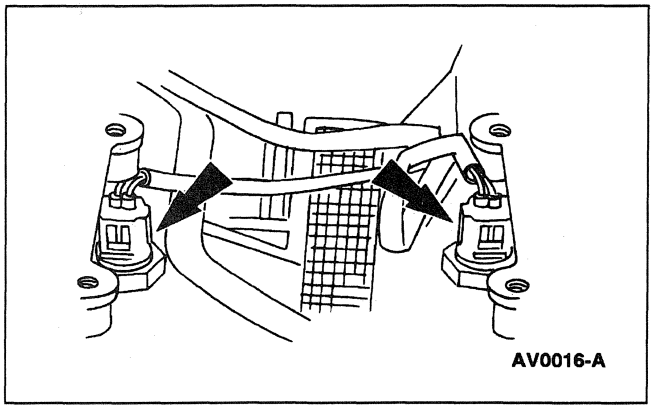

2. Disconnect the connectors from the knock sensors (KS)(12A699).

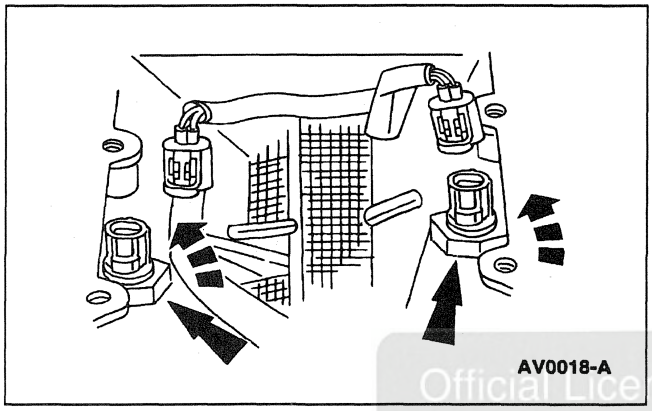

3. Remove the knock sensors.

Official Licensed Product
Ford Motor Company

Installation

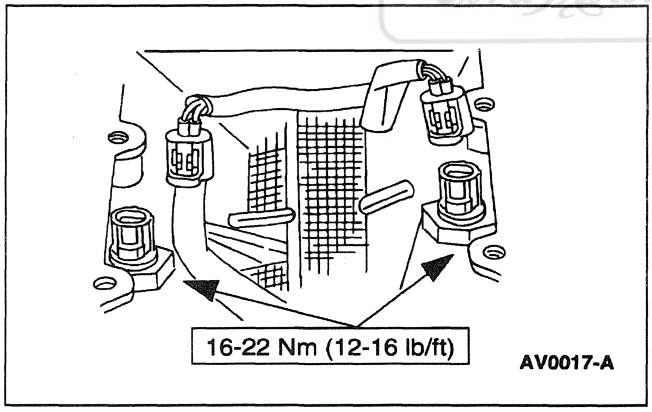

1. Follow the removal procedure in reverse order.

REMOVAL AND INSTALLATION (Continued)

Fuel Pressure Sensor

Removal

WARNING: DO NOT SMOKE OR CARRY LIGHTED TOBACCO OR OPEN FLAME OF ANY TYPE WHEN WORKING ON OR NEAR ANY FUEL RELATED COMPONENTS. HIGHLY FLAMMABLE MIXTURES ARE ALWAYS PRESENT AND MAY BE IGNITED, RESULTING IN POSSIBLE PERSONAL INJURY.

WARNING: FUEL IN THE FUEL SYSTEM REMAINS UNDER HIGH PRESSURE EVEN WHEN THE ENGINE IS NOT RUNNING.

WARNING: BEFORE WORKING ON OR DISCONNECTING ANY OF THE FUEL LINES OR FUEL SYSTEM COMPONENTS, THE FUEL SYSTEM PRESSURE MUST BE RELIEVED.

1. Relieve fuel pressure; refer to Section 310-00.

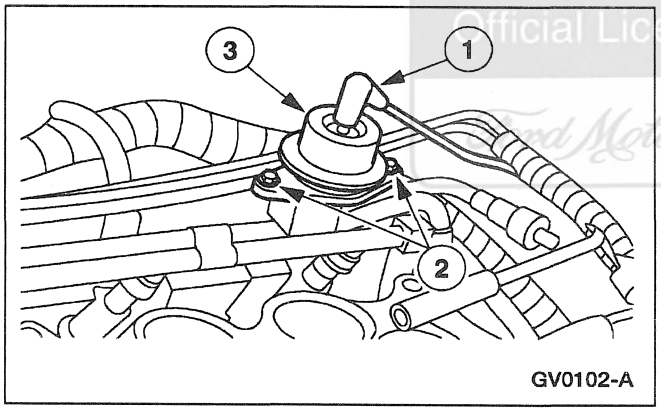

GV0102-A

2. Remove the fuel pressure sensor.
   1 Disconnect the fuel pressure regulator vacuum hose.
   2 Remove the two fuel pressure sensor screws.
   3 Remove the fuel pressure sensor.

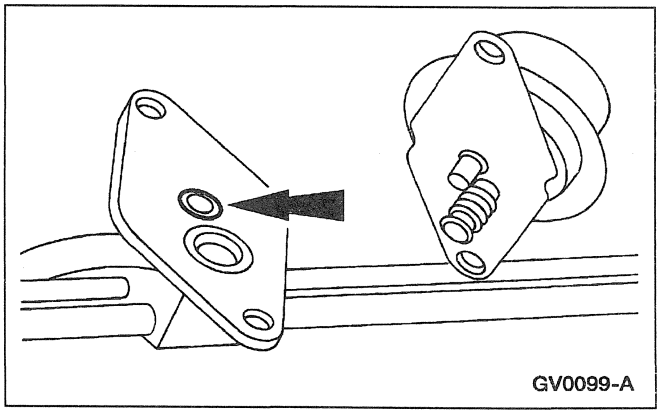
GV0099-A

3. Remove and discard the two fuel pressure sensor O-rings and the seal.

Official Licensed Product
Ford Motor Company

REMOVAL AND INSTALLATION (Continued)

Installation

WARNING: DO NOT SMOKE OR CARRY LIGHTED TOBACCO OR OPEN FLAME OF ANY TYPE WHEN WORKING ON OR NEAR ANY FUEL RELATED COMPONENTS. HIGHLY FLAMMABLE MIXTURES ARE ALWAYS PRESENT AND MAY BE IGNITED, RESULTING IN POSSIBLE PERSONAL INJURY.

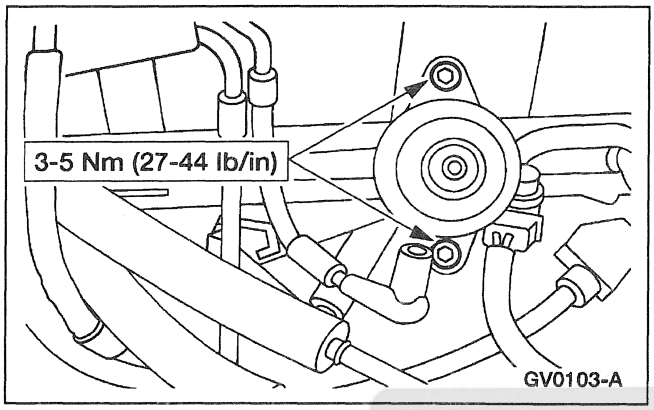

1. **NOTE:** Lubricate the new seal and O-rings with engine oil.

   Follow removal procedure in reverse order.

Official Licensed Product
Ford Motor Company

SPECIFICATIONS

General Specifications

Item	Specification
High Temperature Nickel Anti-Seize Lubricant F6AZ-9L494-AA	ESE-M12A4-A

Torque Specifications

Description	Nm	Lb/Ft	Lb/In
Engine Control Sensor Wiring Connector-to-PCM bolt	3.7	—	33
Throttle Position Sensor to Throttle Body	2.8-3.8	—	25-34
Engine Air Cleaner	5.2-7.2	—	46-64
Engine Air Cleaner Tube Clamps	1.4-2.5	—	12-22
MAF Sensor-to-Engine Air Cleaner	2.5-3.5	—	23-31
Idle Air Control Valve to Throttle Body	a	—	a

(Continued)

Torque Specifications

Description	Nm	Lb/Ft	Lb/In
ECT Sensor	8-13	—	71-115
H2OS-to-Converter Y-Pipe	36-46	26-34	—
Camshaft Position Sensor Retaining Screw	8-12	—	71-106
Power Steering Pump Reservoir Bolts	8.9-12	—	79-106
Knock Sensor	16-22	12-16	—
Crankshaft Position Sensor	8-12	—	71-107
Air Conditioning Compressor	20-30	14.7-22	—

a Tighten screws to 8-12 Nm (71-106 lb-in), then rotate screws an additional 85-95 degrees.

SECTION 307-01 Automatic Transmission — 4R70W

VEHICLE APPLICATION: Mark VIII

SUBJECT **PAGE**

DESCRIPTION AND OPERATION

Automatic Transmission — 4R70W 307-01-3
Bushings, Bearings and Thrust Washers Locator 307-01-12
Disassembled Views 307-01-6
Identification Tags 307-01-3
Main Components and Functions 307-01-15
Geartrain 307-01-17
Hydraulic System 307-01-20
Torque Converter 307-01-16
Range Selection 307-01-4
Seals, Rings and Gaskets Locator 307-01-14
Shift Patterns 307-01-5
Transmission Electronic Control System 307-01-24
Digital Transmission Range Sensor 307-01-26

DIAGNOSIS AND TESTING

Diagnosis by Symptom 307-01-85
Diagnosis by Symptom Chart Directions 307-01-86
Diagnostic Routines 307-01-87
Diagnostic Flow Chart 307-01-30
Diagnostic Strategy 307-01-28
Diagnostics 307-01-34
After On-Board Diagnostic 307-01-40
Before Pinpoint Tests 307-01-40
Leakage Inspection 307-01-81
On-Board Diagnostics With NGS 307-01-35
Output State Control (OSC) Mode 307-01-36
Pinpoint Test G 307-01-76
Pinpoint Tests 307-01-47
Rotunda Transmission Tester 307-01-46
Shift Solenoids Pre-Diagnosis 307-01-47
Special Testing Procedures 307-01-78
Stall Speed Test 307-01-79
Transmission Connector Layouts 307-01-46
Transmission Drive Cycle Test 307-01-40
Transmission Fluid Cooler 307-01-84
Preliminary Inspection 307-01-31
Know and Understand the Concern 307-01-31
Verification of Condition 307-01-31
Visual Inspection 307-01-34

IN-VEHICLE REPAIR

Accumulator —1-2 307-01-150
Accumulator —2-3 307-01-152
Digital Transmission Range (TR) Sensor — Adjustment 307-01-143
Extension Housing Seal and Gasket 307-01-130
Fluid Pan, Gasket and Filter 307-01-116
Main Control — Valve Body 307-01-121

Official Licensed Product
Ford Motor Company

SUBJECT	PAGE
Manual Control Lever Shaft Seal	307-01-138
Servo —Overdrive	307-01-149
Servo —Reverse Servo Assembly	307-01-145
Solenoid Service — Electronic Pressure Control	307-01-135
Transmission Filler Tube	307-01-120
Transmission Fluid Drain and Refill	307-01-112
Transmission Insulator and Retainer	307-01-154
Transmission Support Crossmember	307-01-153
Vehicle Speed Sensor (VSS)	307-01-127
REMOVAL	
Transmission	307-01-155
DISASSEMBLY	
Transmission	307-01-161
DISASSEMBLY AND ASSEMBLY OF SUBASSEMBLIES	
End Play Check	307-01-228
Forward Clutch Cylinder	307-01-198
Intermediate Clutch Cylinder	307-01-189
Main Control Valve Body	307-01-175
Output Shaft and Direct Clutch Cylinder	307-01-210
Planetary Gear Support Assembly and Planetary One-Way Clutch	307-01-207
Pump and Intermediate Clutch Piston	307-01-183
Reverse Clutch	307-01-190
Reverse Sun Gear	307-01-209
Stator to Impeller Interference Check	307-01-226
Stator to Turbine Interference Check	307-01-227
Torque Converter Cleaning and Inspection	307-01-221
Torque Converter Flushing	307-01-229
Torque Converter Leak Checks	307-01-223
Torque Converter One-Way Clutch Check	307-01-225
Torque Converter Service and Replacement	307-01-221
ASSEMBLY	
Transmission	307-01-230
INSTALLATION	
Transmission	307-01-250
GENERAL PROCEDURES	
Transmission Fluid Cooler — Backflush/Cleaning	307-01-255
SPECIFICATIONS	307-01-256

Official Licensed Product
Ford Motor Company

DESCRIPTION AND OPERATION

Automatic Transmission — 4R70W

The 4R70W has the following features:

- Wide ratio gears.
- Four speeds.
- Rear wheel drive.
- Automatic.
- Electronic shift.
- Torque converter clutch control.
- Line pressure controls.

The transmission uses Ravigneaux-style double-pinion gearset with two bands, two one-way roller clutches and four friction clutches to produce four forward gears and Reverse.

4R70W Automatic Transmission

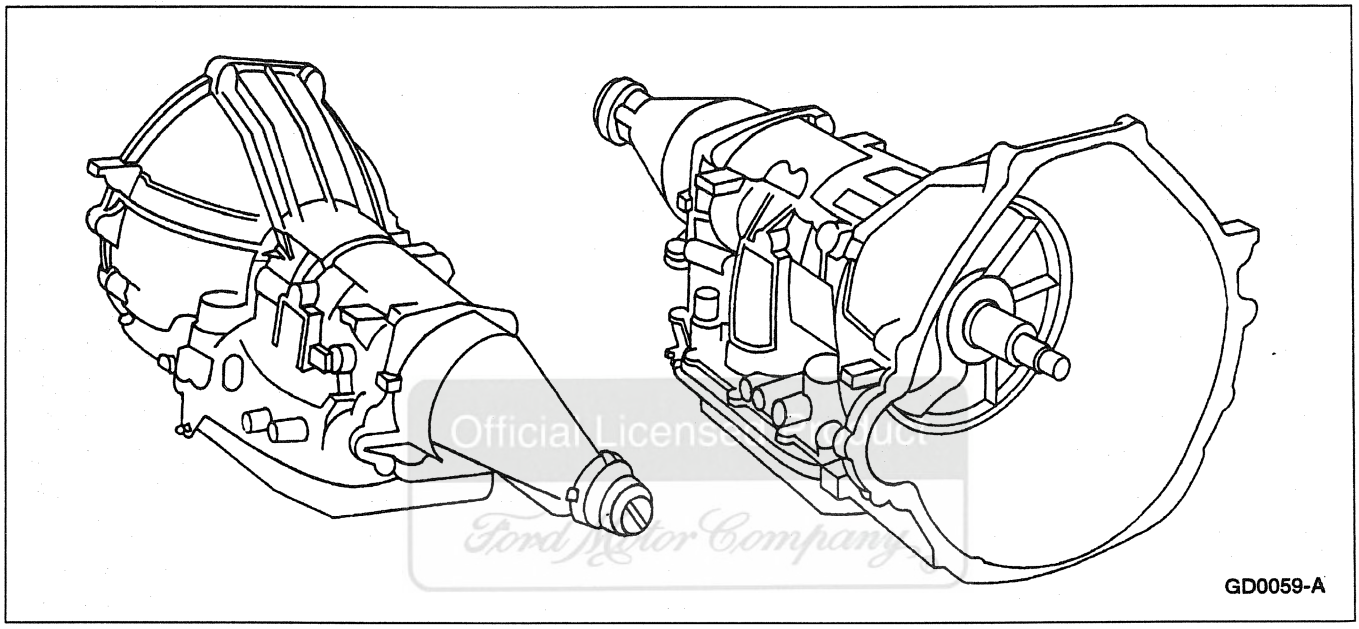

Official Licensed Product
Ford Motor Company

Identification Tags

All vehicles are equipped with a Vehicle Certification Label, located on the driver side door lock post. For proper transmission identification, refer to the code in the space marked TR.

For model, service ID level or build date information, refer to the transmission service ID tag located on the transmission case.

DESCRIPTION AND OPERATION (Continued)

Identification Tag

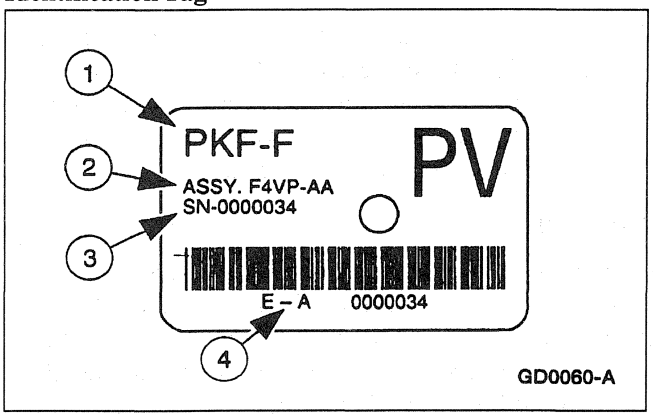

Item	Part Number	Description
1	—	Model Number
2	—	Assembly Number
3	—	Serial Number
4	—	Model and Serial Number

Range Selection

The transmission has six range positions: P, R, N, Ⓓ, 2 and 1.

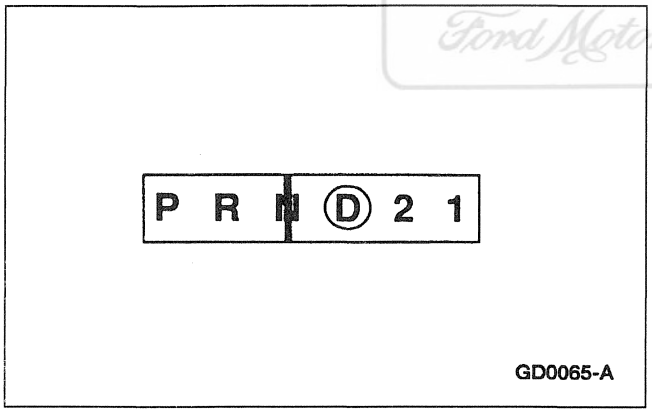

Park

In the Park position:

- There is no powerflow through the transmission.
- The parking pawl locks the output shaft to the case.
- The engine may be started.
- The ignition key may be removed.

Reverse

In the Reverse position:

- The vehicle may be operated in a rearward direction, at a reduced gear ratio.
- Engine braking will occur.

Neutral

In the Neutral position:

- There is no powerflow through the transmission.
- The output shaft is not held and is free to turn.
- The engine may be started.

Overdrive

Overdrive is the normal position for most forward driving.

The Overdrive position provides:

- Automatic shifts.
- Apply and release of the torque converter clutch.
- Maximum fuel economy during normal operation.

Second Position

This position provides:

- Second gear start and hold.
- The torque converter clutch may apply and release.
- Improved traction and engine braking on slippery roads.

1st Position

If this position is selected at normal road speeds, the transmission will shift into second gear, then into first when the vehicle reaches a speed below approximately 45 km/h (28 mph).

This position provides:

- First gear operation only.
- Engine braking for descending steep grades.

Ford Motor Company

DESCRIPTION AND OPERATION (Continued)

Shift Patterns

Upshifts

Transmission upshifting is controlled by the powertrain control module (PCM). The PCM receives inputs from various engine or vehicle sensors and driver demands to control shift scheduling, shift feel and torque converter clutch (TCC) operation.

Downshifts

Under certain conditions the transmission will downshift automatically to a lower gear range (without moving the gearshift lever (7210)). There are three categories of automatic downshifts; Coastdown, Torque Demand and Forced or Kickdown shifts.

Coastdown

The coastdown downshift occurs when the vehicle is coasting down to a stop.

Torque Demand

The torque demand downshift occurs (automatically) during part throttle acceleration when the demand for torque is greater than the engine can provide at that gear ratio. If applied, the transmission will disengage the TCC to provide added acceleration.

Kickdown

For maximum acceleration, the driver can force a downshift by pressing the accelerator pedal to the floor. A forced downshift into a lower gear is possible below calibrated speeds. Specifications for downshift speeds are subject to variations due to tire size, engine and transmission calibration requirements.

Official Licensed Product
Ford Motor Company

DESCRIPTION AND OPERATION (Continued)

Disassembled Views

4R70W Automatic Transmission — Disassembled View

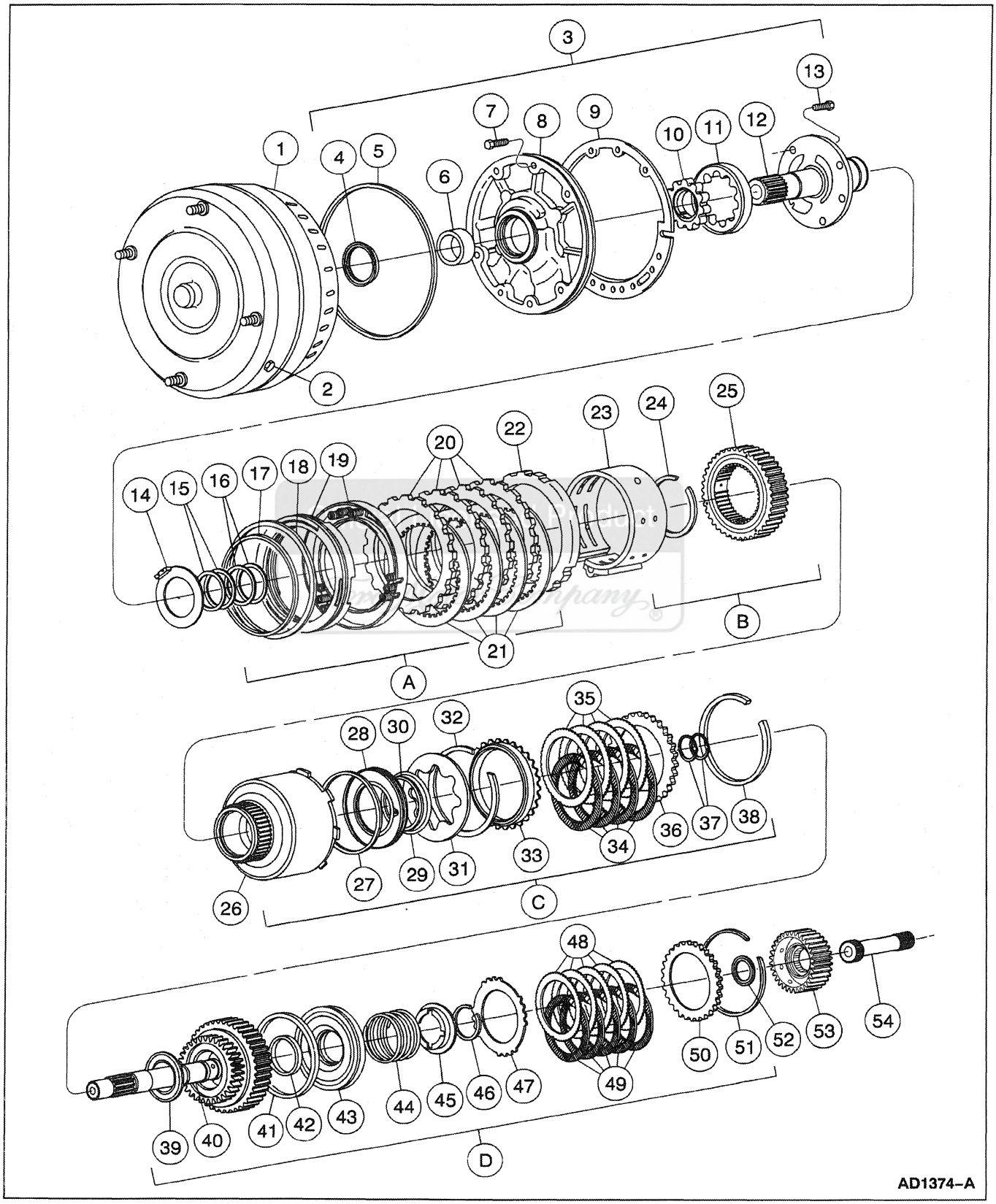

DESCRIPTION AND OPERATION (Continued)

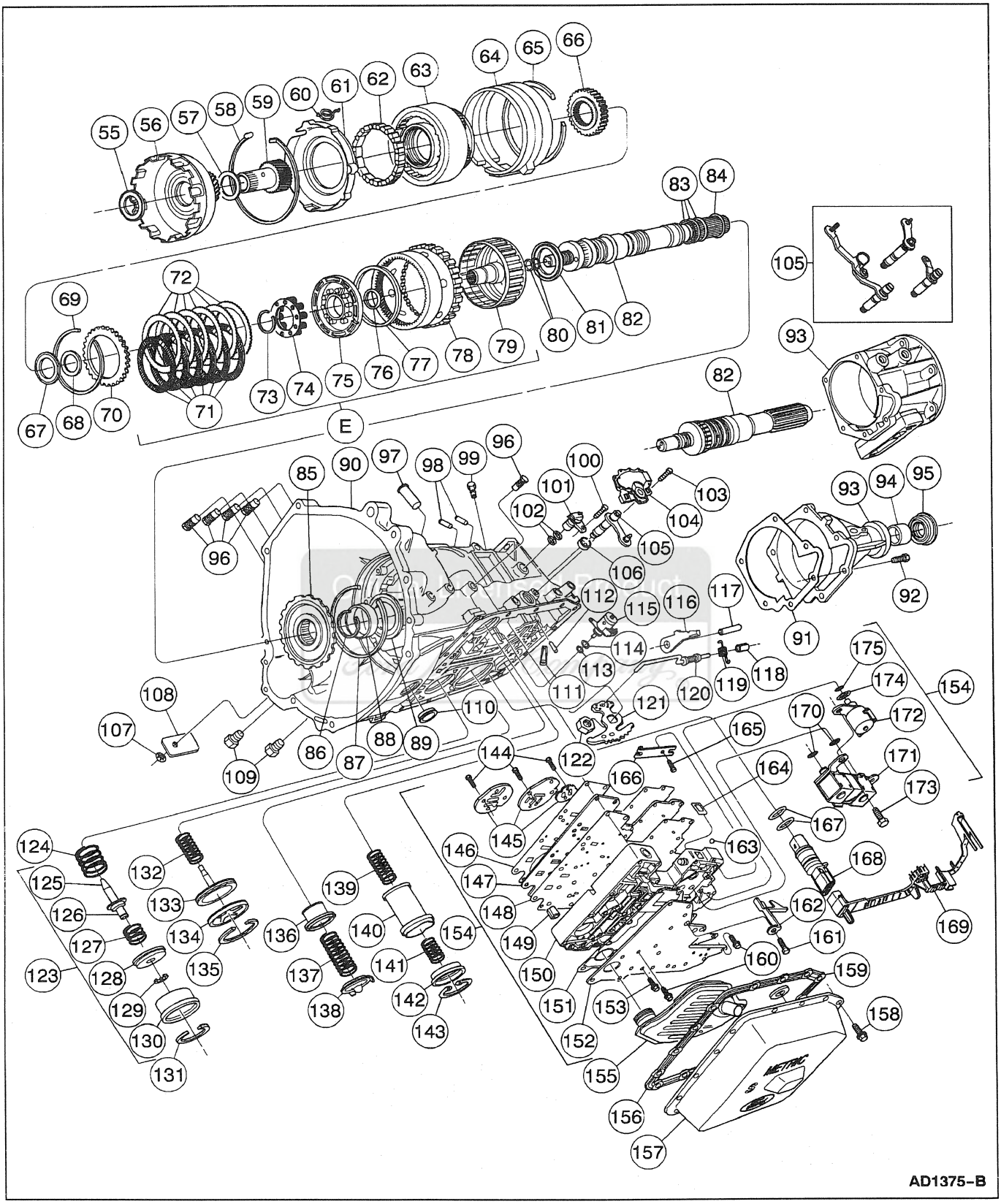

DESCRIPTION AND OPERATION (Continued)

Item	Part Number	Description
1	7902	Converter Assy
2	87650-S2	Plug - Converter Drain - 1/8-27 Dryseal
3	7A103	Pump Assy — Front
4	7A248	Seal Assy — Front Pump
5	7A248	Seal — Front Pump
6	7B258	Bushing — Front Pump
7	N605789-S100	Bolt - M8-1.25 x 35 Hex Head (7-Attached 7A103 to 7005)
8	7A106	Body Assy — Front Pump (Part of 7A103)
9	7A136	Gasket — Front Pump
10	7H169	Gear — Pump Inner Gerotor (Part of 7A103)
11	7H169	Gear — Pump Outer Gerotor (Part of 7A103)
12	7A108	Support Assy — Front Pump
13	N605787-S	Bolt - M8-1.25 x 25 Hex Flg Head (5-Attach 7A108 to 7A103)
14	7D014	Washer — Front Pump Support Thrust — Select Fit No. 1
15	7D020	Seals — Reverse Clutch Cylinder (2 Req'd)
16	7D019	Seals — Forward Clutch Cylinder (2 Req'd)
17	7F225	Seal — Intermediate Clutch Piston — Inner
18	7F224	Seal — Intermediate Clutch Piston — Outer
19	7E005	Piston Kit — Intermediate Clutch
20	7B442	Plate — Intermediate Clutch External Spline (Select Fit) (Steel)
21	7B164	Plate Assy — Intermediate Clutch Internal Spline (Friction)
22	7B066	Plate — Intermediate Clutch Pressure
23	7F196	Band Assy — Overdrive
24	391267-S	Ring —3-21/64 Retains Type SU External (Retains 7F262 to 7F215)
25	7F271	Clutch Assy —Intermediate One-Way Clutch
26	7D044	Drum Assy — Reverse Clutch

(Continued)

Item	Part Number	Description
27	7D403	Seal — Reverse Clutch Piston — Outer
28	7D402	Piston Assy — Reverse Clutch
29	7D404	Seal Reverse Clutch Piston — Inner
30	7D256	Ring — Reverse Clutch Piston Pressure
31	7B070	Spring — Reverse Clutch Piston Return
32	7A577	Spring — Reverse Clutch Piston Spring
33	7B066	Plate — Reverse Clutch Front Pressure
34	7B164	Plate — Reverse Clutch Internal Spline (Friction)
35	7B442	Plate — Reverse Clutch External Spline (Steel)
36	7B066	Plate — Reverse Clutch Rear Pressure
37	7B497	Seals — Input Shaft (2 Req'd)
38	7D483	Retainer — Reverse Clutch Pressure Plate — (Select Fit)
39	7A166	Bearing and Race Assy — Forward Clutch No. 2
40	7F207	Cylinder and Input Shaft Assy — Forward Clutch
41	7A548	Seal — Forward Clutch Piston — Outer
42	7C099	Seal — Forward Clutch Piston — Inner
43	7A262	Piston — Forward Clutch
44	7A480	Spring — Forward Clutch Piston Return
45	7A527	Retainer Return Spring — Forward Clutch
46	388099-S	Snap Ring — Retaining — 1-59/64 (Retains 7A529 in 7F207)
47	7E085	Spring — Rear Clutch Pressure Plate
48	7B442	Plate — Forward Clutch External Spline (Steel)
49	7B164	Plate — Forward Clutch Internal Spline (Friction)
50	7B066	Plate — Forward Clutch Pressure

(Continued)

Licensed Product Ford Motor Company

DESCRIPTION AND OPERATION (Continued)

Item	Part Number	Description
51	7D483	Snap Ring — Retaining (Select Fit)
52	7F231	Bearing and Race Assy — Forward Clutch — Front No. 3
53	7B067	Hub — Forward Clutch
54	7F351	Shaft — Intermediate Stub
55	7C096	Bearing and Race Assy — Forward Clutch Hub No. 4
56	7A019	Gear Assy — Reverse Sun
57	7F244	Bearing and Race Assy — Forward Clutch Sun Gear No. 5
58	388501-S	Retaining Ring —Center Support — 7-7/92
59	7A399	Gear Assy — Forward Clutch Sun
60	7F277	Spring — Case to Planet Support
61	7A130	Support Assy — Planetary Gear
62	7A089	OWC Cage Spring and Roller Assy — Planetary
63	7A398	Planetary Assembly
64	7D095	Band Assy — Reverse
65	377437-S	Retaining Ring — 0.58 Thick (Locates Reverse Band During Assy)
66	7F236	Hub — Direct Clutch
67	7F243	Bearing and Race Assy — Direct Clutch Inner No. 7
68	7F237	Support — Direct Clutch Inner Bearing
69	7D483	Retaining Ring — Direct Clutch Pressure Plate (Select Fit)
70	7B066	Plate — Direct Clutch Pressure
71	7B164	Plate — Direct Clutch Internal Spline (Friction)
72	7B442	Plate — Direct Clutch External Spline (Steel)
73	388104-S	Retainer Ring — 1-19/32 (Retains 7F235 to 7F283)
74	7F235	Retainer and Spring Assy — Direct Clutch
75	7A262	Piston Assy — Direct Clutch
76	7C099	Seal — Direct Clutch Piston — Inner

(Continued)

Item	Part Number	Description
77	7A233	Seal — Direct Clutch Piston — Outer
78	7A153	Gear — Output Shaft Ring
79	7F283	Cylinder Assy — Direct Clutch
80	7F274	Seals — Output Shaft Small — Direct Clutch (2 Req'd)
81	7F240	Bearing and Race Assy — Direct Clutch Outer No. 8
82	7060	Shaft Assy — Output
83	7F273	Seal — Output to Case Shaft Large (3 Req'd)
84	87054-S94	Seal — O-Ring (Piloted Output Shaft Only)
85	7D164	Hub — Output Shaft
86	97713-S	Snap Ring — 1-13/16 Retaining (Retains 7D164 to 7060)
87	7C122	Snap Ring — Retaining (Retains 7D164 to 7A153)
88	7025	Bushing — Rear Case
89	7F242	Bearing and Race Assy — Case Rear No. 9
90	7005	Case Assy
91	7086	Gasket — Extension
92	N803747-S1101	Bolt — M8-1.25 x 30 (6-Attach 7A039 to 7005)
93	7A039	Extension Assy
94	7A034	Bushing — Extension Housing
95	7052	Seal Assy — Extension Housing
96	390318-S100	Pipe Plug — 1/8-27 Dryseal Tapered (5 Req'd)
97	7F295	Pin — Overdrive Band Anchor
98	388142-S	Pin — Reverse Band Anchor (Part of 7005)
99	7034	Vent Assy — Case
100	N605771-S427	Bolt — M6-1.0 x 14 Hex Flg Head (Attaches Output Shaft Speed Sensor to Case)
101	7H103	Sensor Assy — Transmission Output Shaft Speed
102	7Z101	Seal — 14.0 x 1.78 O-Ring (2 Req'd)
103	N806933-S102	Bolt and Washer Assy — M6-1.0 x 25 MM (2-Attach 7F293 to 7005)

(Continued)

Official Licensed Product Ford Motor Company

DESCRIPTION AND OPERATION (Continued)

Item	Part Number	Description
104	7A247	Sensor — Transmission Range
105	7A256	Lever Assy — Manual Control
106	7B498	Seal Assy — Manual Control Lever
107	373907-S2	Nut — 1/4 Spring (Retains Identification Tag to 7000)
108	7B148	Tag — Identification (Part of 7005)
109	7D273	Connector Assy — Fluid Tube (2 Req'd)
110	7N171	Plug — Converter Housing Access
111	7E242	Screen Assy — Fluid
112	7B210	Pin — Manual Lever Shaft Retainer
113	7Z383	Seal — 0.426 x 0.070 O-Ring
114	7Z101	Seal — 14.0 x 1.78 O-Ring
115	7G383	Solenoid Valve — Transmission Pressure Control
116	7A441	Pawl — Parking Pawl
117	7D071	Shaft — Parking Pawl
118	7D419	Cup — Park Rod Guide (Part of 7A039)
119	7D070	Spring — Parking Pawl Return
120	7A232	Rod Assy — Park Pawl Actuating
121	7A115	Lever Assy — Manual Valve Detent Lever
122	N800287-S536	Nut — M14 x 1.5 Hex — Intermediate Detent Lever (Attaches 7A115 to 7A256)
123	7H188	Piston Assy — Overdrive Servo
124	7F201	Spring — Overdrive Servo Piston
125	7F203	Rod — Overdrive Servo Actuating (Part of 7H188)
126	7H179	Washer — Backup Overdrive Servo (Part of 7H188)
127	7G277	Spring — Overdrive Cushion Spring (Part of 7H188)
128	7F200	Piston Assy — Overdrive Servo (Part of 7H188)
129	97411-S	Ring — Retaining (Part of 7H188)
130	7F411	Sleeve Assy — Overdrive Servo (Part of 7H188)

(Continued)

Item	Part Number	Description
131	7384	Ring — 2.85 Retaining Type TVP "H" Internal (Retains 7H188 to 7005)
132	7D031	Spring — Reverse Band Servo Piston
133	7D189	Piston Assy — Reverse Band Servo
134	7D036	Cover Assy — Reverse Band Servo Piston
135	388215-S100	Retaining Ring — Internal — 3-13/16
136	7F292	Piston Seal — 2-3 Accumulator (Bonded Seals)
137	7F285	Spring — 2-3 Shift Accumulator Piston
138	7B264	Retainer — 2-3 Shift Accumulator Spring
139	7F284	Spring — 1-2 Shift Accumulator (Model Dependent)
140	7F251	Piston — 1-2 Shift Accumulator
141	7F248	Spring — 1-2 Shift Accumulator
142	7H300	Cover and Seal Assy — 1-2 Accumulator
143	7384	Ring — 2-1/16 Retaining Type HU Internal (Retains 7H300 to 7005)
144	N605517-S1000	Bolt — M6-1.0 x 16 Hex Head (12-Attach Reinforcing Plate to Valve Body)
145	7F282	Plate — Valve Body Reinforcing)Part of 7A100)
146	7C155	Gasket — Valve Body Separator — Upper
147	7A008	Plate — Control Valve Body Separator (Part of 7A100)
148	7D100	Gasket — Valve Body Separator — Lower
149	7H171	Valve — Converter Drainback
150	7A091	Body Assy — Main Control
151	7H173	Gasket — Valve Body Cover Plate
152	7C034	Plate — Valve Body Cover (Part of 7A100)

(Continued)

Ford Licensed Product

DESCRIPTION AND OPERATION (Continued)

Item	Part Number	Description
153	N807178-S1000	Bolt — M6-1.0 x 18 Hex Head (11-Attach 7C034 to 7A100 (Part of 7A100)
154	7A100	Control Assy — Main
155	7A098	Filter and Seal Assy — Fluid
156	7A191	Gasket — Transmission Pan
157	7A194	Pan — Transmission
158	N605785-S427	Bolt — M8-1.25 x 18 Hex Flg Head (14-Attach 7A194 to 7005)
159	7L027	Magnet — Ceramic Case (Part of 7A194)
160	N808947-S1300	Bolt — M8-1.25 x 46 Hex Shldr Pilot (2-Attach 7C034 to 7A100)
161	N807179-S1000	Bolt — M6-1.0 x 52 Hex Flg Head (12-Attach 7A100 to 7005)
162	7H111	Retainer — Solenoid
163	7E195	Ball — 1/4 Diameter Coast Booster Valve Shuttle (8 Req'd)
164	7H187	Screen — Solenoid Pressure Supply
165	N606022-S1000	Bolt — M6-1.0 x 4.0 Hex Flg Head (13-Attach 7A100 to 7005)

(Continued)

Item	Part Number	Description
166	7E332	Spring Assy — Manual Valve Detent
167	7Z276	Seal — 0.864 x 0.070 O-Ring (2 Req'd)
168	7G276	Bulkhead Assy — Wiring Connector
169	7G276	Bulkhead Assy — Connector (Molded)
170	7Z484	Seal — 6.07 x 1.70 O-Ring (2 Req'd)
171	7G484	Solenoid Valve — Transmission Shift
172	7G136	Solenoid Valve — Transmission Torque Converter Clutch
173	N807178-S1000	Bolt — M6-1.0 x 16 Hex Head (Retains 7D136 and 7G484 to 7A100)
174	7Z136	Seal — 0.489 x 0.070 O-Ring
175	7Z484	Seal — 0.176 x 0.070 O-Ring
A	—	Intermediate Clutch Assy
B	—	Intermediate One-Way Clutch
C	—	Reverse Clutch Assy
D	—	Forward Clutch Assy
E	—	Direct Clutch Assy

Official Licensed Product

DESCRIPTION AND OPERATION (Continued)

Bushings, Bearings and Thrust Washers Locator

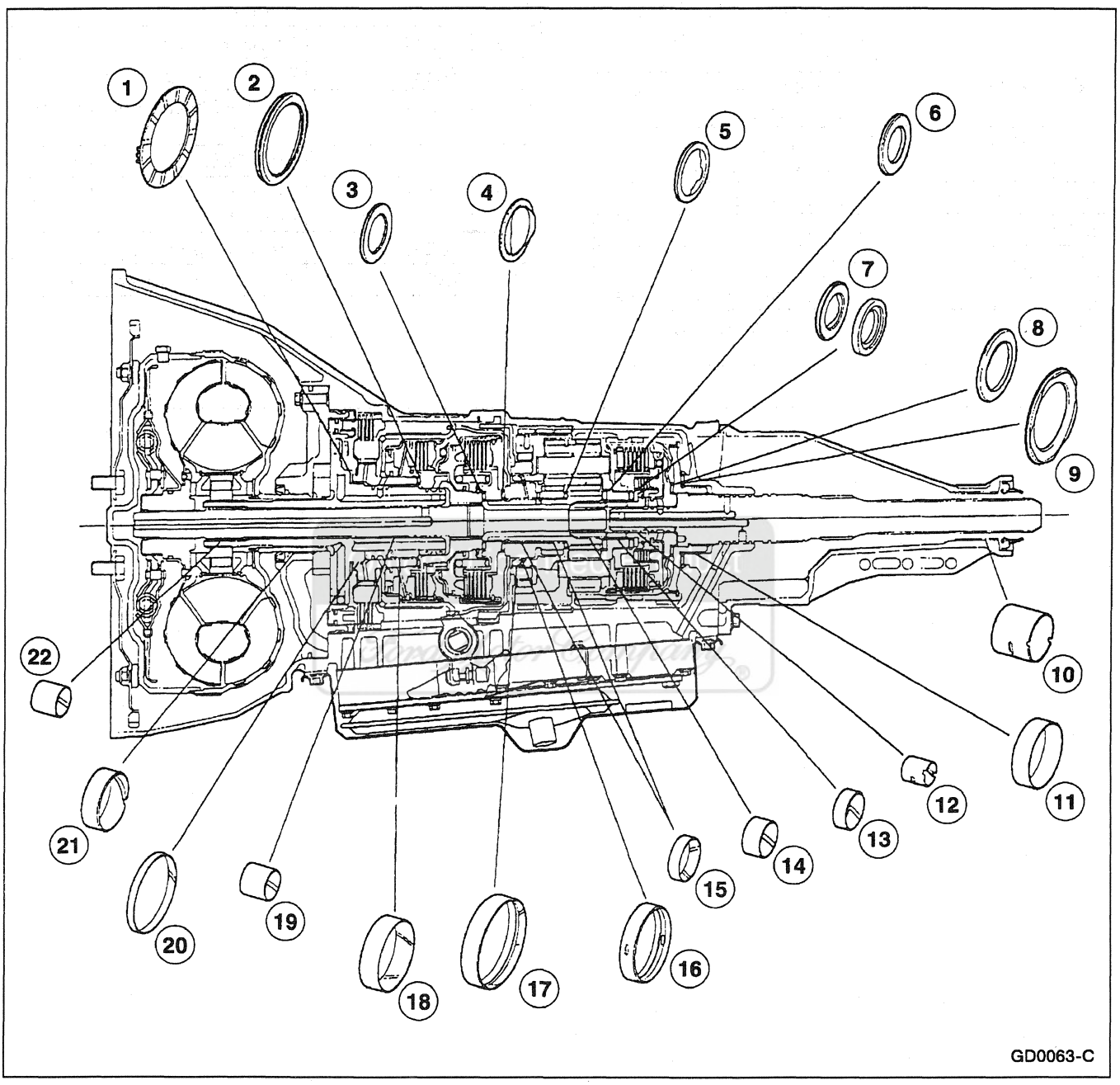

Item	Part Number	Description
1	7D014	Pump #1 Thrust Washer (Select Fit)
2	7A166	Forward Clutch #2 Bearing and Race Assembly
3	7F231	Forward Clutch Bearing and Race Assembly — Front #3

(Continued)

Item	Part Number	Description
4	7C096	Forward Clutch Sun Gear Bearing and Race Assembly #4
5	7F244	Forward Clutch Sun Gear Bearing and Race Assembly #5
6	7F241	Planet Assembly Bearing and Race #6

(Continued)

DESCRIPTION AND OPERATION (Continued)

Item	Part Number	Description
7	7F243, 7F237	Direct Clutch Inner Bearing, Race Assembly #7 and Direct Clutch Inner Bearing Support #7
8	7F240	Direct Clutch Outer Bearing and Race Assembly #8
9	7F242	Outer Bearing and Race Assembly — Rear #9
10	7A034	Extension Bushing
11	7025	Case Bushing
12	7B233	Output Shaft Bushing
13	7B375	Planet Carrier Bushing — Rear
14	7F209	Forward Clutch Sun Gear Bushing

(Continued)

Item	Part Number	Description
15	7N193	Reverse Clutch Sun Gear Bushing
16	7B374	Carrier Bushing — Front
17	7A132	Planetary Support Bushing
18	7F218	Reverse Clutch Drum Bushing — Rear
19	7B261	Front Pump Support Bushing
20	7F217	Reverse Clutch Drum Bushing — Front
21	7B258	Front Pump Bushing
22	7B261	Front Pump Support Bushing

Official Licensed Product
Ford Motor Company

DESCRIPTION AND OPERATION (Continued)

Seals, Rings and Gaskets Locator

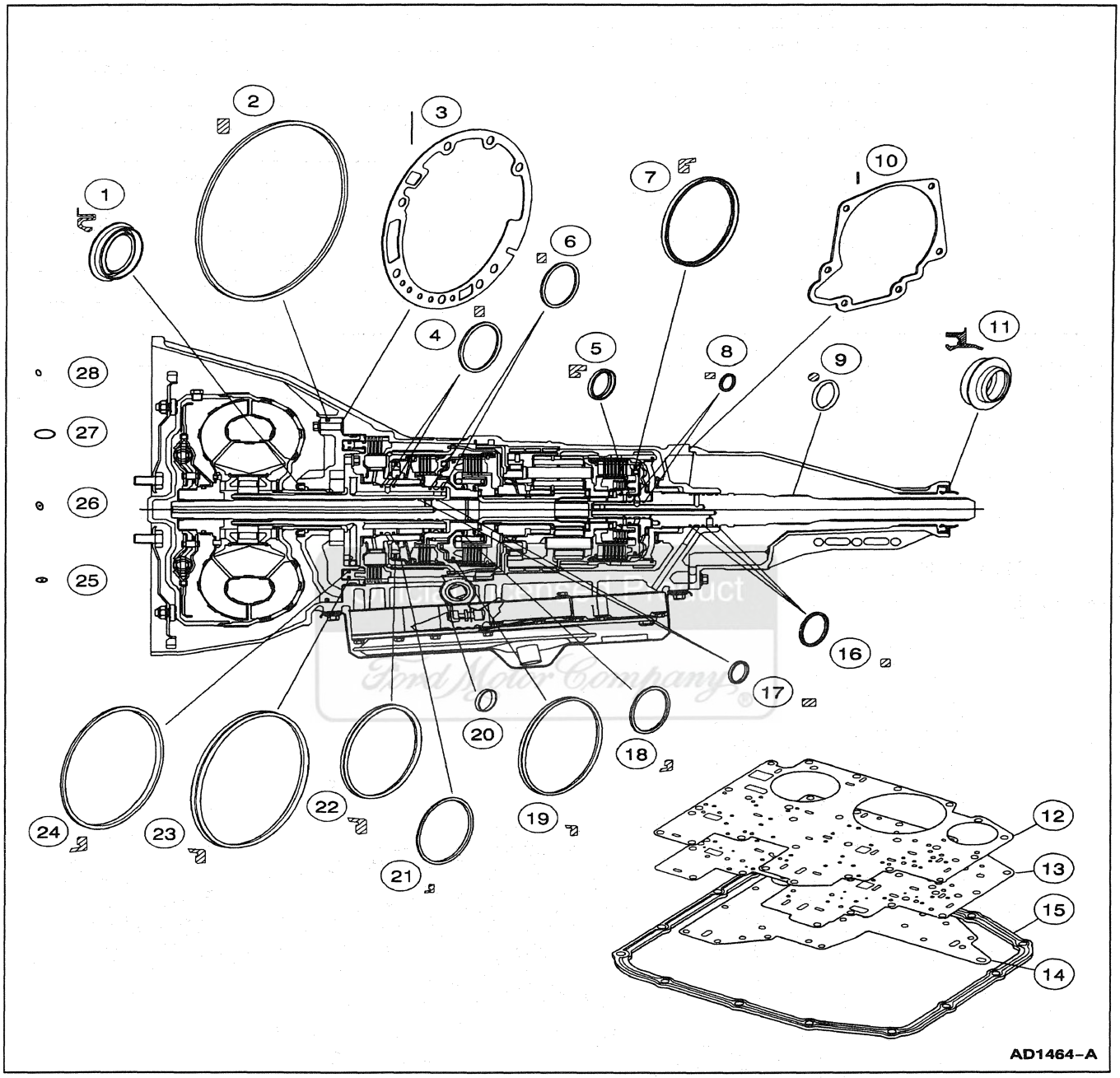

Item	Part Number	Description
1	7A248	Front Pump Seal Assembly
2	7A248	Front Pump Seal
3	7A136	Front Pump Gasket
4	7D020	Reverse Clutch Cylinder Seal (2 Req'd)
5	7C099	Direct Clutch Piston Inner Seal

(Continued)

Item	Part Number	Description
6	7D019	Forward Clutch Cylinder Seal (2 Req'd)
7	7A233	Direct Clutch Piston Outer Seal
8	7F274	Output Shaft to Direct Clutch Cylinder Seal (2 Req'd)
9	87054-S94	O-Ring Seal

(Continued)

DESCRIPTION AND OPERATION (Continued)

Item	Part Number	Description
10	7086	Extension Gasket
11	7052	Extension Housing Seal Assembly
12	7C155	Control Valve Body Upper Gasket
13	7D100	Valve Body Separator Plate Lower Gasket
14	7H173	Valve Body Cover Plate Gasket
15	7A191	Transmission Pan to Case Gasket
16	7F273	Output Shaft to Case Seal (3 Req'd)
17	7B497	Input Shaft Seal (2 Req'd)
18	7C099	Forward Clutch Piston Inner Seal
19	7A548	Forward Clutch Piston Outer Seal

(Continued)

Item	Part Number	Description
20	7B498	Manual Control Lever Seal Assembly
21	7D403	Reverse Clutch Piston Outer Seal
22	7D404	Reverse Clutch Piston Inner Seal
23	7F224	Intermediate Clutch Piston Outer Seal
24	7F225	Intermediate Clutch Piston Inner Seal
25	7Z484	Shift Solenoid Seal (2 Req'd)
26	7B497	Input Shaft Seal (2 Req'd)
27	7Z276	Bulkhead Seal (2 Req'd)
28	7Z383	Pressure Control Solenoid Seal

Main Components and Functions

Transmission Main Components — Sectional View

Official Licensed Product
Ford Motor Company

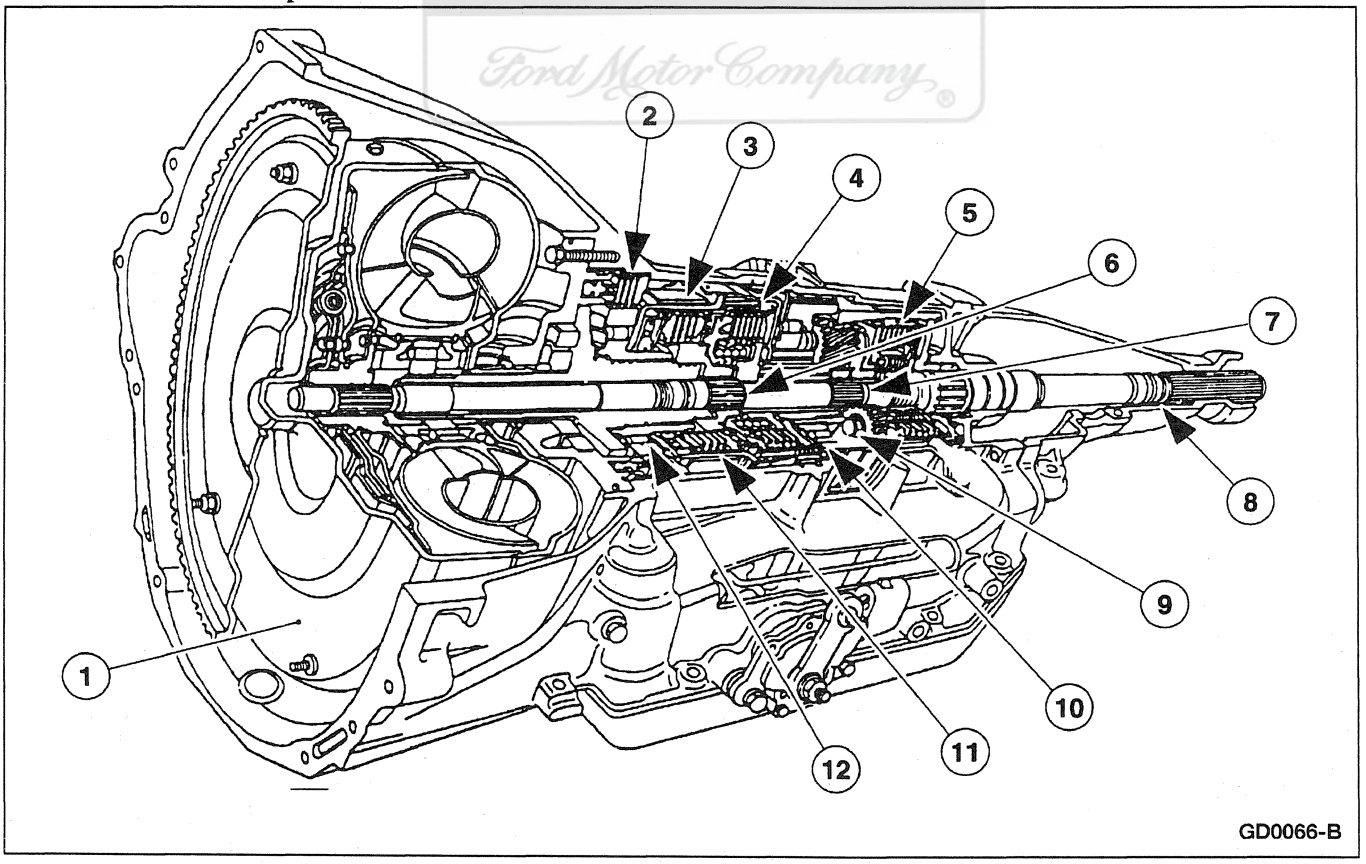

DESCRIPTION AND OPERATION (Continued)

Item	Part Number	Description
1	7902	Torque Converter
2	7B164A	Intermediate Clutch
3	7B164	Reverse Clutch
4	7B164D	Forward Clutch
5	7B164B	Direct Clutch
6	7F207	Forward Clutch Cylinder and Shaft

(Continued)

Item	Part Number	Description
7	7F351	Shaft — Intermediate Stub
8	7060	Output Shaft
9	7A089	Planetary One-Way Clutch
10	7D095	Reverse Clutch Band
11	7F196	Overdrive Band
12	7A089	Intermediate One-Way Clutch

Torque Converter

The torque converter (7902) transmits and multiplies torque. The torque converter is a four-element device:

- impeller assembly
- turbine assembly
- reactor assembly
- clutch and damper assembly

The standard torque converter components operate as follows:

- Rotation of the converter housing and impeller set the fluid in motion.
- The turbine reacts to the fluid motion from the impeller, transferring rotation to the geartrain through the input shaft.
- The reactor redirects fluid going back into the impeller, allowing for torque multiplication.
- The clutch and damper assembly dampens powertrain torsional vibration and provides a direct mechanical connection for improved efficiency.
- Power is transmitted from the torque converter to the planetary gearsets and other components through the input shaft.

Official Licensed Product
Ford Motor Company

DESCRIPTION AND OPERATION (Continued)

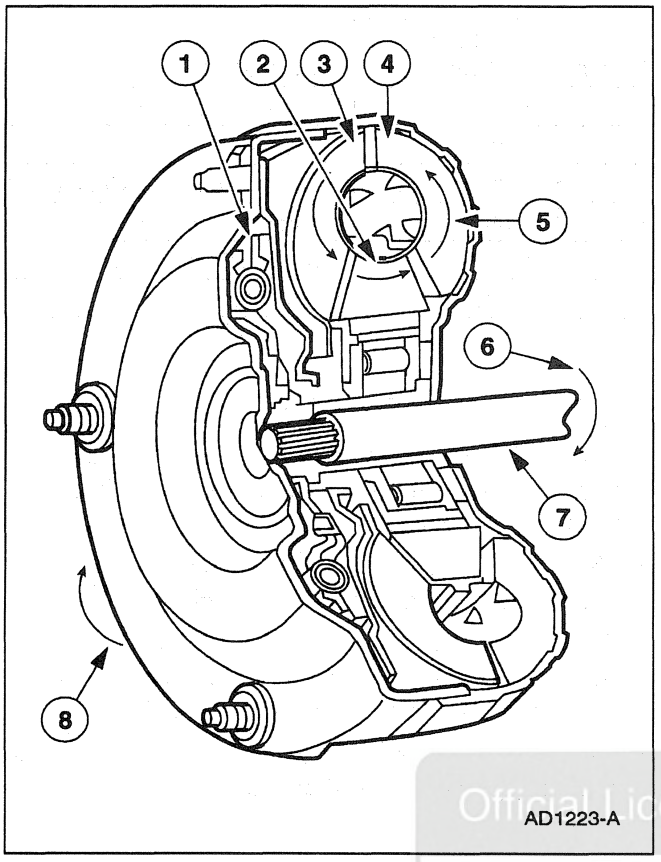

Item	Part Number	Description
1	—	Converter Clutch and Damper (Part of 7902)
2	—	Reactor (Part of 7902)
3	—	Turbine (Part of 7902)
4	—	Impeller (Part of 7902)
5	—	Fluid Motion
6	—	Transmission Input Rotation
7	—	Input Shaft (Part of 7902)
8	—	Engine Rotation

Geartrain

Power is transmitted from the torque converter to the Ravigneaux geartrain components through the input shaft and forward clutch cylinder.

- The geartrain contains a compound planetary set connected by dual pinion gears.
- By holding or driving certain members of the gearset, four forward ratios and one reverse ratio are obtained and transmitted to the output shaft (7060) . The ratios are as follows:

Gear Ratio	
1st	2.84 to 1
2nd	1.55 to 1
3rd	1.00 to 1
4th	0.70 to 1
Reverse	2.32 to 1

- Members of the geartrain are held by bands and driven by clutches.

The 4R70W uses:

- two bands.
- two one-way roller clutches.
- four friction clutches.

Planetary Gearset

The planetary gearset in the transmission is a Ravigneaux-type set consisting of the following components:

- Forward clutch sun gear
- Reverse clutch sun gear
- A pinion carrier
- Long and short pinions
- Output ring gear

Members are held or driven to produce forward and reverse gear ratios.

Input Shaft

The forward clutch cylinder and shaft (7F207) transfers speed and torque from the converter turbine to the geartrain. This shaft is splined to the turbine on one end and to the forward clutch sun gear and input shaft on the other end.

Stub Shaft

The stub shaft transfers power from the turbine shaft to the planet carrier (through the direct clutch) during third and fourth gear operation.

Output Shaft

The output shaft provides torque to the driveshaft and rear axle assembly (4200) . It is driven by the ring gear (7A153) of the planetary gearset.

Apply Components

There are eight apply devices used to drive or hold the planetary gearset members.

Official Licensed Product
Ford Motor Company

DESCRIPTION AND OPERATION (Continued)

Band—Overdrive

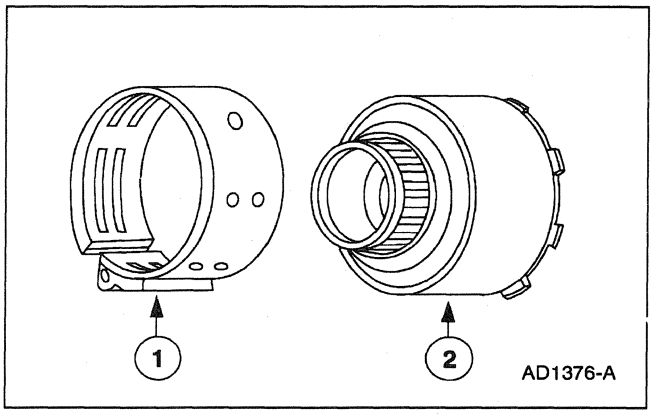

Item	Part Number	Description
1	7F196	Overdrive Band Assembly
2	7D044	Reverse Clutch Drum Assembly

The overdrive band holds the reverse clutch drum in stationary fourth gear and in manual range second gear. This action causes the reverse sun gear to be held in these ranges.

Band—Low and Reverse

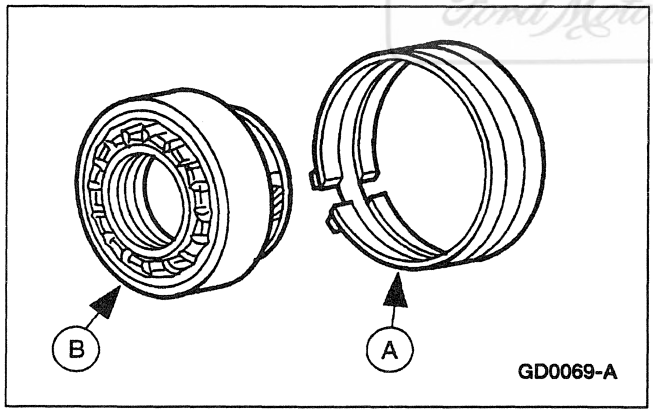

The (A) low and reverse band holds the (B) pinion carrier in reverse. It also applies in 1st gear and manual 1 position to provide engine braking.

Clutch—Intermediate

Intermediate Clutch Cylinder Disassembled View

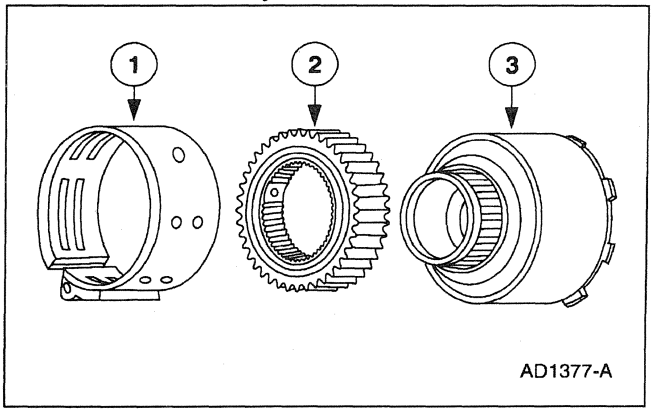

Item	Part Number	Description
1	7F196	Overdrive Band Assembly
2	7F271	Intermediate One-Way Clutch Assembly
3	7D044	Reverse Clutch Drum Assembly

The intermediate clutch works with the intermediate one-way clutch to hold the sun gear stationary in second gear. It remains applied in third and fourth gears, but does not transmit power.

Clutch—Forward

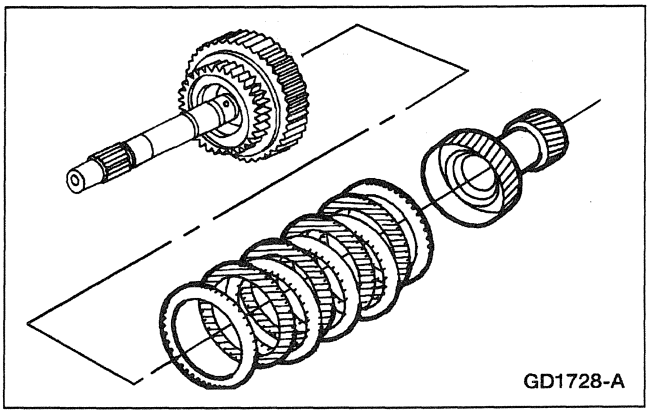

Official Licensed Product
Ford Motor Company

DESCRIPTION AND OPERATION (Continued)

The forward clutch couples the forward clutch cylinder and input shaft to the forward sun gear in all forward gears.

Clutch—Direct

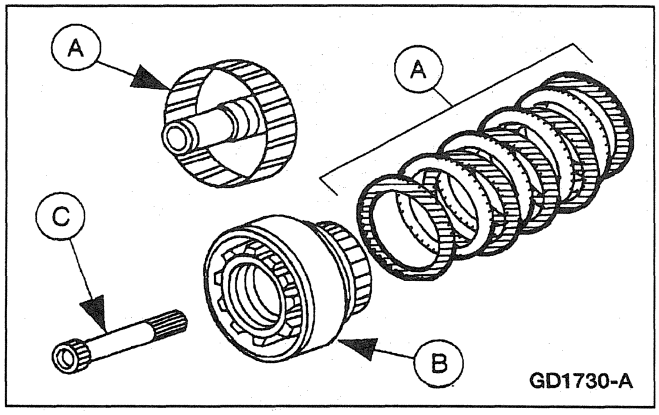

The (A) direct clutch couples the input shaft to the (B) planet carrier through the (C) stub shaft in third and fourth gears.

Clutch—Reverse

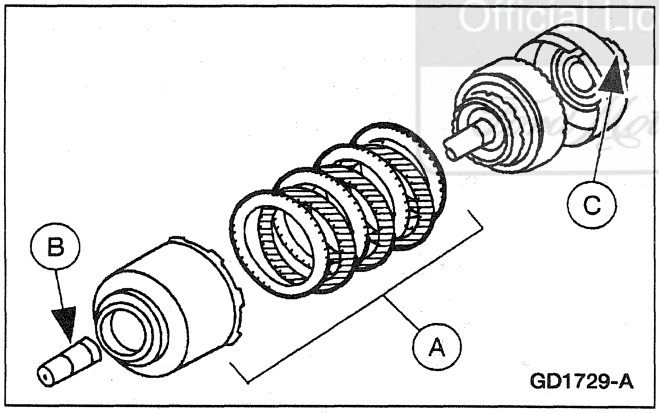

The (A) reverse clutch couples the (B) input shaft to the (C) reverse sun gear, it is applied in reverse range only.

One-Way Clutch—Planetary (Low)

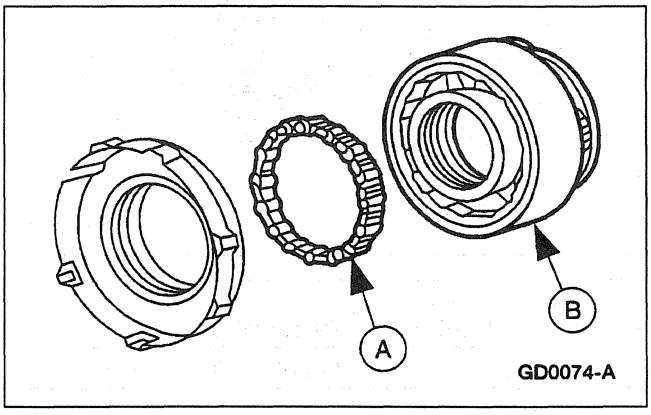

The (A) planetary (low) one-way clutch is a roller clutch that holds the (B) planetary gearset in first gear, Ⓓ and D ranges. During automatic coasting downshifts into first gear (Ⓓ and D ranges), it freewheels so that there is no engine braking.

Official Licensed Product Motor Company

DESCRIPTION AND OPERATION (Continued)

One-Way Clutch—Intermediate

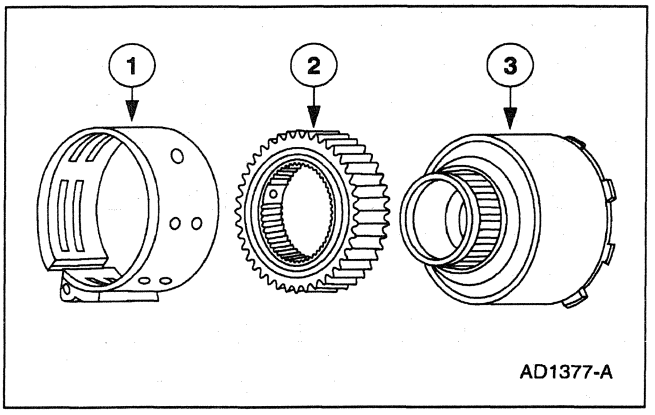

Item	Part Number	Description
1	7F196	Overdrive Band Assembly
2	7F271	Intermediate One-Way Clutch Assembly

(Continued)

Item	Part Number	Description
3	7D044	Reverse Clutch Drum Assembly

The intermediate one-way clutch is a roller clutch that works with the intermediate friction clutch to hold the reverse clutch drum and reverse sun gear stationary in second gear during acceleration. It freewheels in third gear and during coasting in second gear, D and D ranges.

Hydraulic System

Official Licensed Product
Ford Motor Company

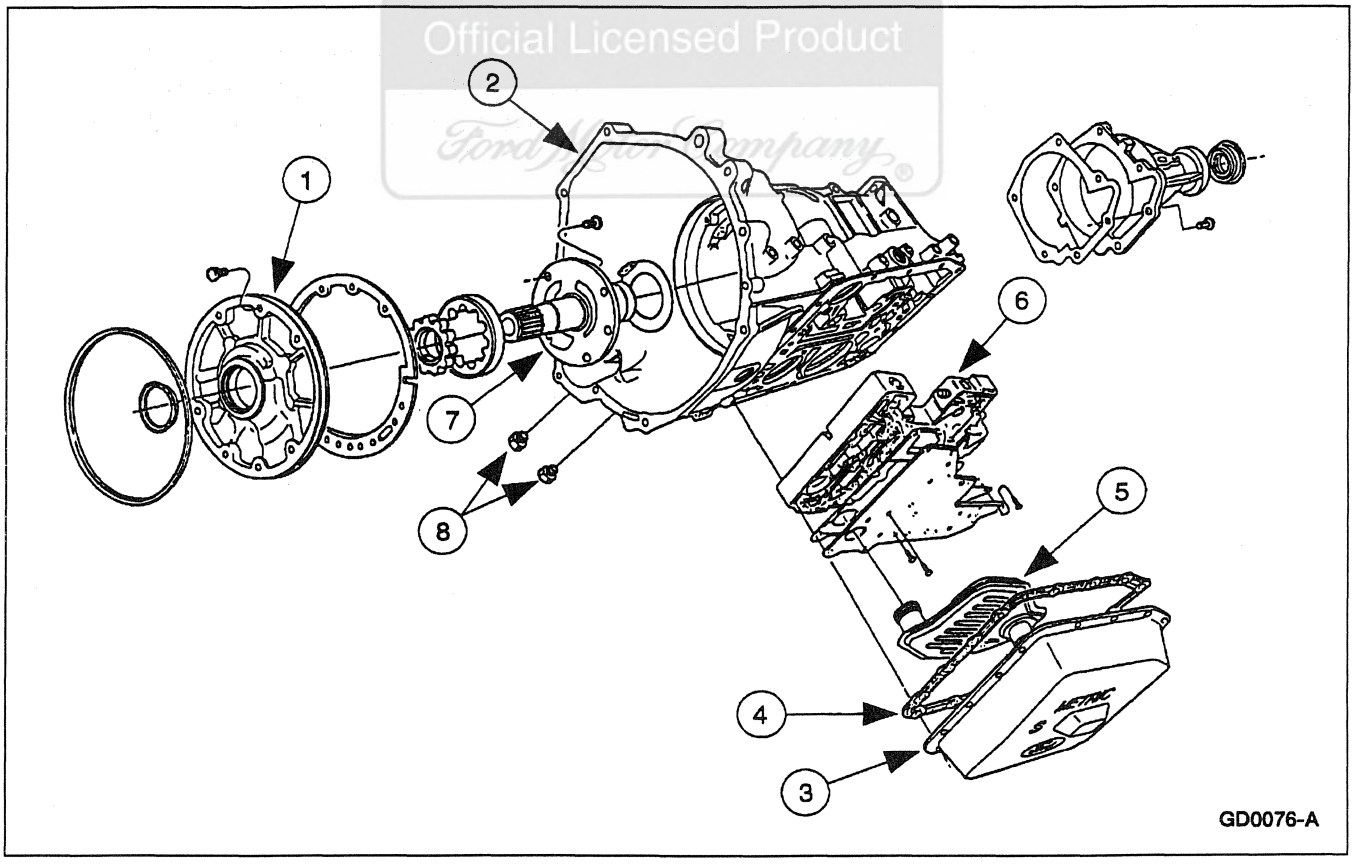

DESCRIPTION AND OPERATION (Continued)

Item	Part Number	Description
1	7A106	Front Pump Body Assembly
2	7005	Case Assembly
3	7A194	Transmission Pan
4	7A191	Transmission Pan Gasket
5	7A098	Fluid Filter and Seal Assembly
6	7A100	Main Control Assembly
7	7A108	Front Pump Support Assembly
8	7D273	Fluid Tube Connector Assembly (2 Req'd)

(Continued)

Pump

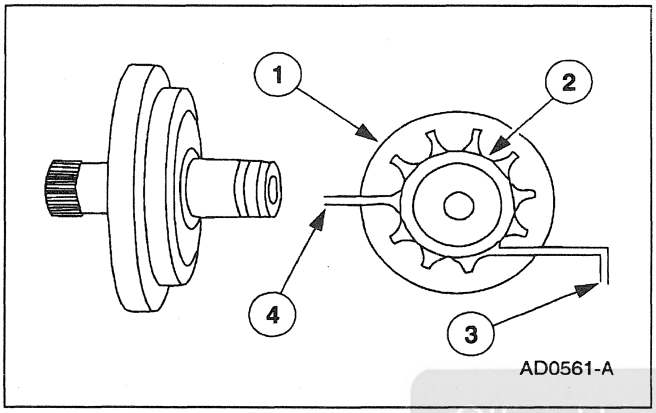

Item	Part Number	Description
1	—	Outer Rotor
2	—	Inner Rotor
3	—	Outlet
4	—	Inlet

(Continued)

The transmission uses a gerotor design front pump support and gear (7A103) . The pump provides the volume of fluid needed to charge the torque converter, main control assembly, cooling system and lube system. Pump pressure is regulated by the main regulator valve. The pump is more efficient at lower engine speeds. The pump has an internal boost circuit.

Filter

All fluid drawn from the transmission pan by the pump passes through the filter. The filter and its accompanying seal are part of the fluid path from the sump (pan) to the fluid pump.

Official Licensed Product
Ford Motor Company

DESCRIPTION AND OPERATION (Continued)

Main Control

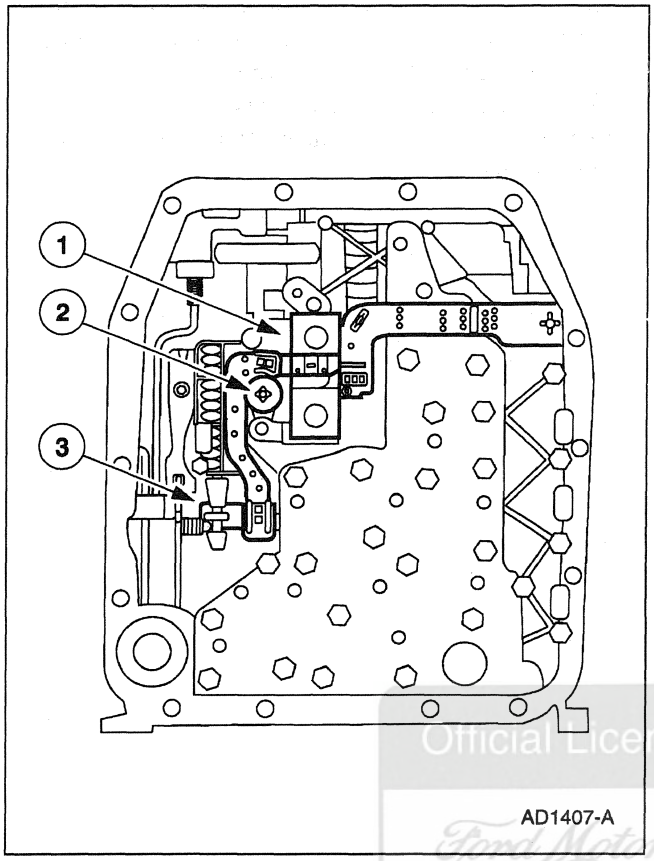

Item	Part Number	Description
1	—	Shift Solenoid 1 (Part of 7G484)
2	7G136	Torque Converter Clutch Solenoid
3	—	Shift Solenoid 2 (Part of 7G484)

The main control valve body (7A100) houses three electronic solenoids:

- Two shift solenoids (7G484)
- Torque converter clutch solenoid (TCC solenoid)(7G136)

Accumulators

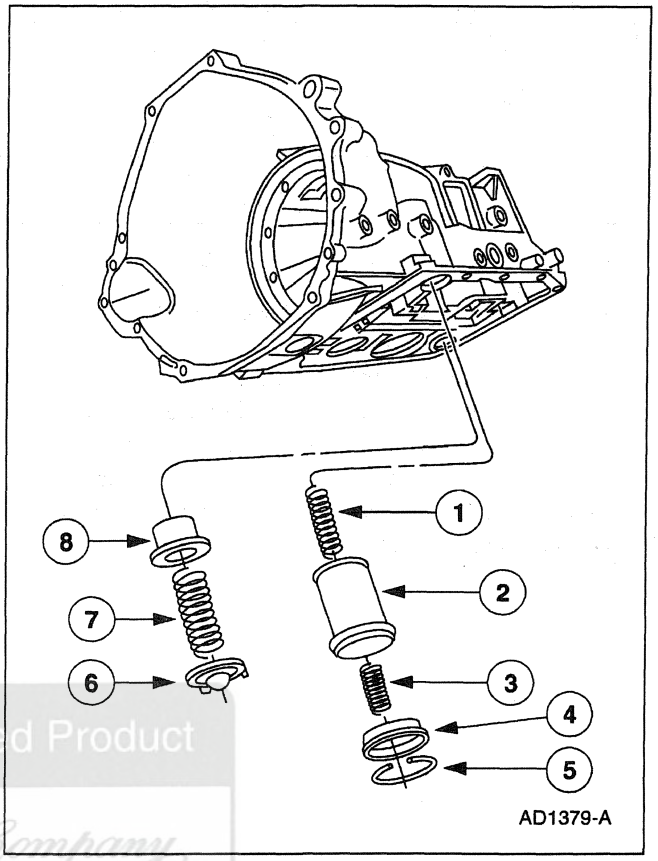

Item	Part Number	Description
1	7F284	Spring — 1-2 Shift Accumulator (Model Dependent)
2	7F251	Piston — 1-2 Shift Accumulator
3	7F284	Spring — 1-2 Shift Accumulator
4	7H300	Cover and Seal Assy — 1-2 Accumulator
5	7384	Ring — 2 1/16 Retaining Type HU Internal

(Continued)

Official Licensed Product
Ford Motor Company

DESCRIPTION AND OPERATION (Continued)

Item	Part Number	Description
6	7B264	Retainer — 2-3 Shift Accumulator Piston
7	7F285	Spring — 2-3 Shift Accumulator Piston
8	7H292	Piston — 2-3 Shift Accumulator

The transmission uses two accumulators:

- 1-2 Accumulator — The 1-2 accumulator is used to soften the 1-2 shift by absorbing some of the pressure directed to the intermediate clutch. Constant line pressure is applied to the middle section of the 1-2 accumulator piston, opposing the intermediate clutch pressure, until the pressure is high enough to overcome line pressure. The top of the piston is exhausted to the sump.
- 2-3 Accumulator — The 2-3 accumulator is used to soften the 2-3 shift by absorbing some of the direct clutch pressure. Forward clutch pressure is applied to the top side of the 2-3 accumulator piston, holding the piston down until clutch pressure is high enough to overcome it. The middle section of the piston is exhausted to the sump.

Official Licensed Product
Ford Motor Company

DESCRIPTION AND OPERATION (Continued)

Transmission Electronic Control System

Electronic System Description

The powertrain control module (PCM)(12A650) and its input/output network control the following transmission operations:

- shift timing
- line pressure (shift feel)
- torque converter clutch

The transmission control is separate from the engine control strategy in the powertrain control module , although some of the input signals are shared. When determining the best operating strategy for transmission operation, the powertrain control module uses input information from certain engine-related and driver-demand related sensors and switches.

In addition, the powertrain control module receives input signals from certain transmission-related sensors and switches. The powertrain control module also uses these signals when determining transmission operating strategy.

Official Licensed Product
Ford Motor Company

Using all of these inputs signals, the powertrain control module can determine when the time and conditions are right for a shift, or when to apply or release the torque converter clutch. It will also determine the best line pressure needed to optimize shift feel. To accomplish this the powertrain control module uses hydraulic solenoids to control transmission operation.

The following provides a brief description of each of the sensors and actuators used to control transmission operation.

DESCRIPTION AND OPERATION (Continued)

Electronic Control Components

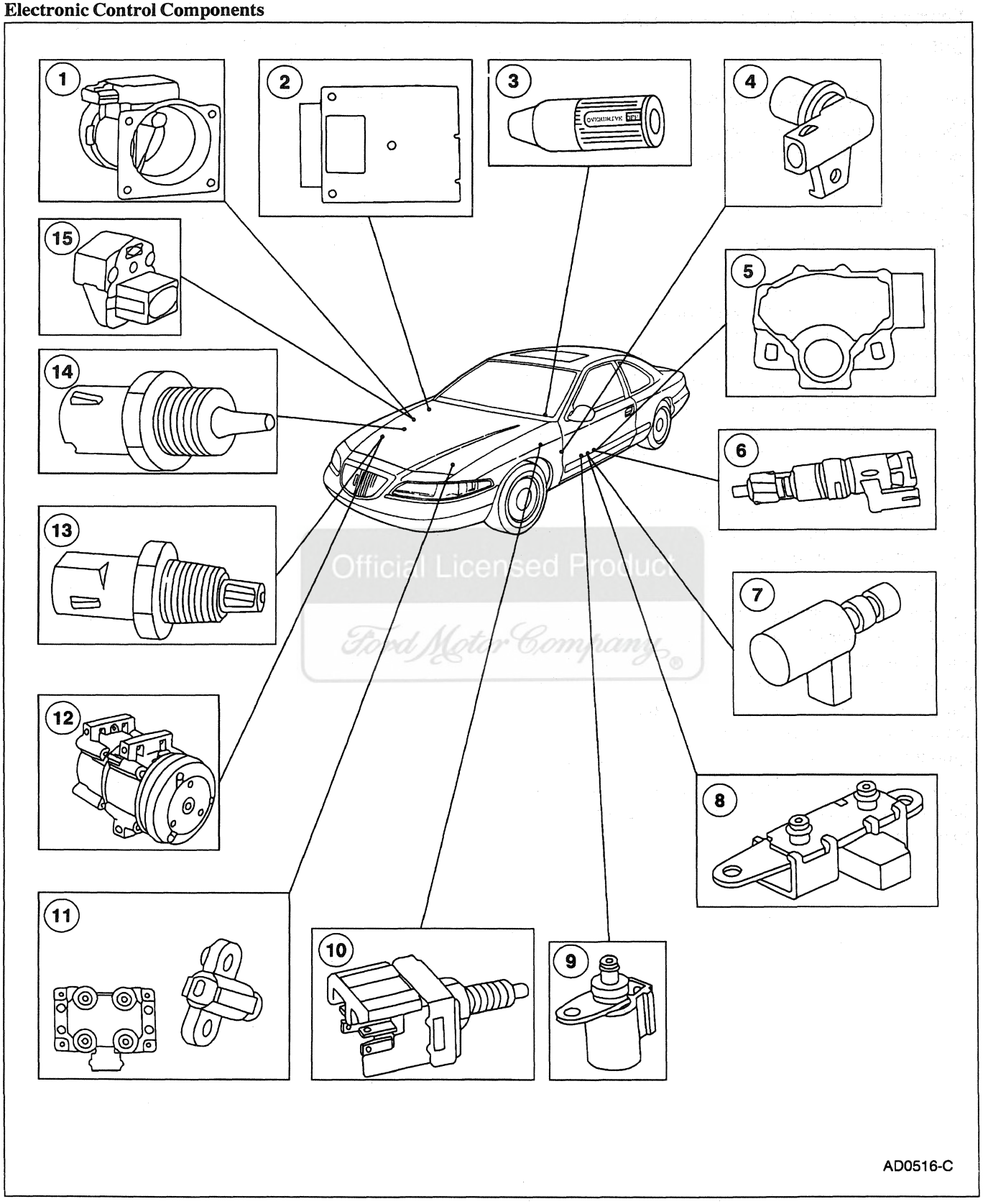

Official Licensed Product
Ford Motor Company

DESCRIPTION AND OPERATION (Continued)

Item	Part Number	Description
1	12B579	Mass Air Flow (MAF) Sensor
2	12A650	Powertrain Control Module (PCM)
3	7G550	Transmission Control Switch (TCS)
4	7H103	Output Shaft Speed (OSS) Sensor
5	7A247	Transmission Range (TR) Sensor
6	9E731	Vehicle Speed Sensor
7	7G383	Electronic Pressure Control (EPC)

(Continued)

Item	Part Number	Description
8	7G484	Shift Control Solenoids 1 and 2
9	7G136	Torque Converter Clutch (TCC) Solenoid
10	13480	Brake ON/OFF (BOO) Switch
11	—	Electronic Ignition (EI) System
12	2884	Air Conditioning Clutch (ACC)
13	12A648	Intake Air Temperature (IAT) Sensor
14	12A648	Engine Coolant Temperature (ECT) Sensor
15	9B989	Throttle Position (TP) Sensor

Mass Air Flow (MAF) Sensor

The mass air flow sensor (MAF sensor)(12B579) measures the mass of air flowing into the engine. The MAF sensor output signal is used by the powertrain control module to calculate injector pulse width. For transmission strategies the mass air flow sensor is used to regulate electronic pressure control (EPC), shift and torque converter clutch scheduling.

Powertrain Control Module (PCM)

The operation of the transmission is controlled by the powertrain control module . Many input sensors provide information to the PCM. The PCM then controls actuators which determine transmission operation.

Transmission Control Switch (TCS) and Transmission Control Indicator Lamp (TCIL)

The transmission control switch (TCS) is a momentary contact switch. When the switch is pressed, a signal is sent to the powertrain control module to allow automatic shifts from first through fourth gears or first through third gears only. The PCM energizes the transmission control indicator lamp (TCIL) when the switch is off. The TCIL indicates overdrive cancel mode activated (lamp on) and electronic pressure control (EPC) circuit shorted (lamp flashing) or monitored sensor failure.

Output Shaft Speed (OSS) Sensor

The output shaft speed (OSS) sensor is a magnetic pickup, located at the output shaft ring gear, that sends a signal to the powertrain control module to indicate transmission output shaft speed. The OSS is used for torque converter clutch control, speed scheduling and to determine electronic pressure control.

Digital Transmission Range Sensor

The digital transmission range (TR) sensor is located on the outside of the transmission at the manual lever. The digital sensor completes the start circuit in PARK and NEUTRAL, the back-up lamp circuit in REVERSE. The digital sensor also opens/closes a set of four switches that are monitored by the powertrain control module (PCM) to determine the position of the manual lever (P, R, N, D, 2, 1).

Vehicle Speed Sensor (VSS)

The vehicle speed sensor (VSS) (vehicle-dependent) is a variable reluctance sensor that sends an AC/frequency signal to the powertrain control module. The vehicle speed sensor signal is used by the powertrain control module to calculate vehicle speed in mph and determine shift scheduling and electronic pressure control.

Ford Licensed Product
Ford Motor Company

DESCRIPTION AND OPERATION (Continued)

Transmission Fluid Temperature (TFT) Sensor

The transmission fluid temperature (TFT) sensor is located on the lead frame assembly near the shift solenoids on the main control valve body. It is a temperature sensitive device called a thermister. It sends a voltage signal to the powertrain control module (PCM). The voltage signal varies with transmission fluid temperature. The PCM uses this signal to determine whether a cold start shift schedule is necessary. The shift schedule is compensated when the transmission fluid temperature is cold. The PCM also inhibits torque converter clutch (TCC) operation at low transmission fluid temperatures and corrects electronic pressure control.

Electronic Pressure Control (EPC) Solenoid

The electronic pressure control (EPC) solenoid regulates transmission pressure. EPC valve pressure is used to control line pressure.

Shift Solenoid — 1 and 2 SSA (1) SSB (2)

Two on/off shift solenoids provide gear selection of first through fourth gears by controlling the pressure to the three shift valves. One unit containing the two shift solenoids is located in the main control valve body. The shift solenoids are two-way normally closed style.

Solenoid Operation Chart

Gear Lever Position	PCM Commanded Gear	Solenoids		
		SSA/ SS1	SSB/ SS2	TCC
P/R/N	1	ON	OFF	HD
D	1	ON	OFF	HD
D	2	OFF	OFF	EC
D	3	OFF	ON	EC
D	4	ON	ON	EC
D w/OD OFF				
1	1	ON	OFF	HD
2	2	OFF	OFF	EC

(Continued)

Solenoid Operation Chart

Gear Lever Position	PCM Commanded Gear	Solenoids		
		SSA/ SS1	SSB/ SS2	TCC
3	3	OFF	ON	EC
Manual 2	2	OFF	OFF	EC
Manual 1	1	ON	OFF	HD
1[a]	2	OFF	OFF	EC

a When a manual pull-in occurs above a calibrated speed the transmission will downshift from the higher gear until the vehicle speed drops below this calibrated speed.

EC = Electronically Controlled.

HD = Hydraulically Disabled.

Torque Converter Clutch (TCC) Solenoid

The torque converter clutch (TCC) solenoid is used to control the apply and release of the TCC.

Brake Pedal Position (BPP) Switch

The brake pedal position (BPP) switch tells the powertrain control module (PCM) when the brakes are applied. The torque converter clutch disengages when the brakes are applied. The BPP switch closes when the brakes are applied and opens when they are released.

Electronic Ignition (EI) System

The electronic ignition consists of a crankshaft position sensor, two four tower ignition coils and the powertrain control module . The ignition control module operates by sending crankshaft position information from the crankshaft position sensor to the ignition control module. The ignition control module generates a profile ignition pickup (PIP) signal (engine rpm) and sends it to the PCM. The PCM uses PIP signal in the transmission strategy, wide-open throttle (WOT) shift control, torque converter clutch control and EPC pressure.

DESCRIPTION AND OPERATION (Continued)

Air Conditioning (A/C) Clutch

An electromagnetic clutch is energized when the clutch cycling pressure switch closes. The switch is located on the suction accumulator/drier. The closing of the switch completes the circuit to the clutch and draws it into engagement with the compressor driveshaft. When the A/C clutch is engaged, electronic pressure control (EPC) is adjusted by the PCM to compensate for additional load on the engine.

Intake Air Temperature (IAT) Sensor

The intake air temperature (IAT) sensor provides the sequential fuel injection (SFI) system mixture temperature information. The IAT sensor is used both as a density corrector for air flow calculation and to proportion cold enrichment fuel flow. The IAT sensor is installed in the air cleaner outlet tube. The IAT sensor is also used in determining electronic pressure control (EPC) pressures.

Engine Coolant Temperature (ECT) Sensor

The engine coolant temperature (ECT) sensor detects temperature of engine coolant and supplies the information to the powertrain control module . The ECT sensor is used to control torque converter clutch (TCC) operation. The ECT is installed in the heater outlet fitting or cooling passage on the engine. For engine control applications, the ECT signal is used to modify ignition timing, EGR flow and air-to-fuel ratio as a function of engine coolant temperature.

Throttle Position (TP) Sensor

The throttle position (TP) sensor is a potentiometer mounted on the throttle body. The TP sensor detects the position of the throttle plate and sends this information to the powertrain control module (PCM). The TP sensor is used for shift scheduling, electronic pressure control and torque converter clutch (TCC) control.

DIAGNOSIS AND TESTING

Official Licensed Product

Diagnostic Strategy

Troubleshooting an electronically controlled automatic transmission is simplified by using the proven method of diagnosis. One of the most important things to remember is that there is a definite procedure to follow.

NOTE: Do not take any short cuts or assume that critical checks or adjustments have already been made.

Follow the procedures as written to avoid missing critical components or steps.

To properly diagnose a concern have the following publications available:

- Transmission Reference Manual.
- Powertrain Control/Emissions Diagnosis Manual [1].
- TSBs and OASIS Messages.
- Electrical/Vacuum Troubleshooting Manual (EVTM).

These publications provide the information required when diagnosing transmission concerns.

Use the Diagnostic Flow Chart as a guide and follow the steps as indicated.

Preliminary Inspection

- Know and understand the customer's concern.
- Verify the concern by operating the vehicle.
- Check the fluid levels and condition.
- Check for non-factory add-on items.
- Check shift linkages for proper adjustment.
- Check TSBs and OASIS messages regarding the concern.

Diagnostics

- Perform on-board diagnostic procedures key on engine off (KOEO) and key on engine running (KOER).
- Record all diagnostic trouble codes (DTCs).
- Repair all non-transmission codes first.
- Repair all transmission codes second.
- Erase all continuous codes and attempt to repeat them.
- Repair all continuous codes.

1 Can be purchased as a separate item.

DIAGNOSIS AND TESTING (Continued)

- If only pass codes are obtained, proceed to Diagnosis by Symptom Index for further information and diagnosis.

Official Licensed Product
Ford Motor Company

DIAGNOSIS AND TESTING (Continued)

Diagnostic Flow Chart

Diagnostic Flow Chart

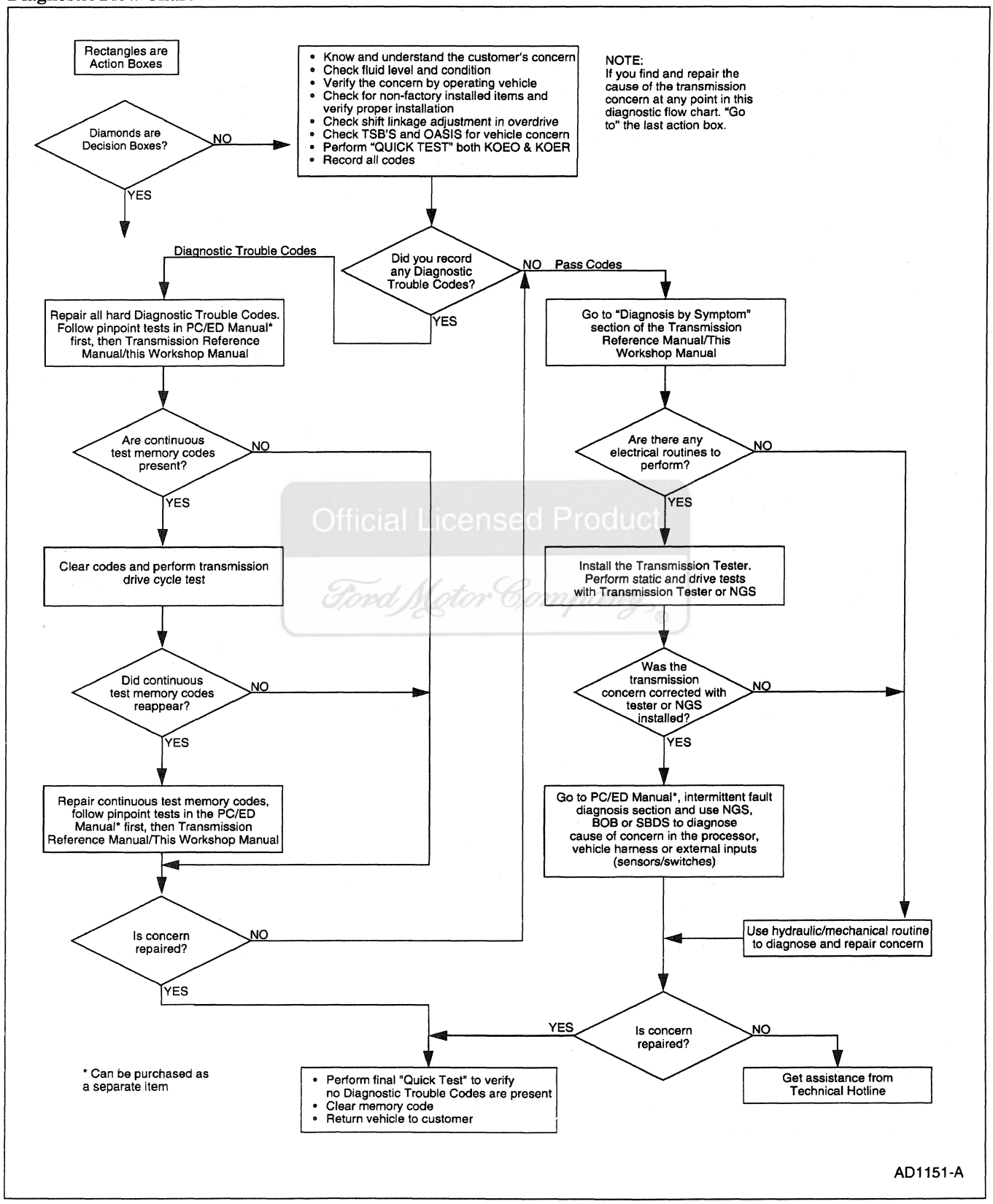

Official Licensed Product
Ford Motor Company

DIAGNOSIS AND TESTING (Continued)

Preliminary Inspection

The following items must be checked prior to beginning the diagnostic procedures:

Know and Understand the Concern

In order to properly diagnose a concern, first understand the customer complaint or condition. Customer contact may be required in order to begin to verify the concern. Understand the conditions as to when the concern occurs. For example:

- Hot or cold vehicle temperature.
- Hot or cold ambient temperature.
- Vehicle driving conditions.
- Vehicle loaded/unloaded.

After understanding when and how the concern occurs, proceed to verify the concern.

Verification of Condition

This section provides information that must be used in both determining the actual cause of customer concerns and performing the appropriate procedures.

The following procedures must be used when verifying customer concerns for the transmission (7003) :

Determine Customer Concern

NOTE: Some transmission conditions can cause engine concerns. An electronic pressure control short circuit can cause engine misfiring. The torque converter clutch not disengaging will stall the engine.

Determine customer concerns relative to vehicle use and dependent driving conditions, paying attention to the following items:

- Hot or cold vehicle operating temperature
- Hot or cold ambient temperatures
- Type of terrain
- Vehicle loaded/unloaded
- City/highway driving
- Upshifting
- Downshift
- Coasting
- Engagement
- Noise/vibration — check for dependencies, either rpm dependent, vehicle speed dependent, shift dependent, gear dependent, range dependent, or temperature dependent.

Check Fluid Level and Condition

Fluid Level Check

⚠ **CAUTION: The vehicle should not be driven if the fluid level indicator shows the fluid below the do not drive mark or internal failure could result.**

NOTE: If the vehicle has been operated for an extended period at high highway speeds, city traffic, hot weather, or pulling a trailer the fluid needs to cool down to obtain an accurate reading.

NOTE: The fluid level reading on the indicator will differ from operating and ambient temperatures. The correct reading should be within the normal operating temperature range.

Under normal circumstances the fluid level should be checked during normal maintenance. If the transmission starts to slip, shift slowly, or has signs of fluid leaking, the fluid level should be checked.

1. With the transmission in (P) PARK, the engine at idle, foot pressed on the brake, move the range selector lever through each gear and allow engagement of each gear. Place the range selector lever in the PARK position.
2. Wipe the fluid level indicator cap and remove the indicator.
3. Wipe the indicator with a clean cloth.
4. Install the indicator back in the filler tube until it is fully seated, then remove the indicator. The fluid level should be within the normal operating temperature range.

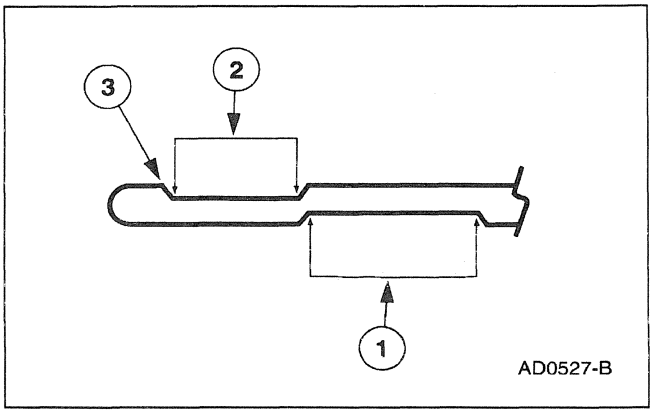

Official Licensed Product
Ford Motor Company

DIAGNOSIS AND TESTING (Continued)

Item	Description
1	Fluid Level at Operating Temperature 66°-77°C (150°-170°F)
3	Fluid Level at Room Temperature 10°-35°C (50°-95°F)
3	Do Not Drive Mark

High Fluid Level

A fluid level that is too high may cause the fluid to become aerated due to the churning action of the rotating internal parts. This will cause erratic control pressure, foaming, loss of fluid from the vent tube, and possible transmission malfunction and/or damage. If an overfill reading is indicated refer to Transmission Fluid Drain and Refill in this section.

Low Fluid Level

A low fluid level could result in poor transmission engagement, slipping, malfunction and/or damage. This could also indicate a leak in one of the transmission seals or gaskets.

Adding Fluid

⚠ **CAUTION: The use of any other type of transmission fluid than specified could result in transmission malfunction and/or damage.**

If fluid needs to be added, add fluid in 0.25L (1/2 pint) increments through the filler tube. Do not overfill the fluid. For fluid type; refer to the specification chart in this section.

Fluid Condition Check

1. Check the fluid level.
2. Observe the color and the odor. The color under normal circumstances should be dark reddish, not brown or black or have a burnt odor.
3. Hold the fluid level indicator over a white facial tissue and allow the fluid to drip onto the facial tissue and examine the stain.
4. If evidence of solid material is found, the transmission fluid pan should be removed for further inspection.
5. If the stain is a foamy pink color this may indicate coolant in the transmission. The engine cooling system should also be inspected at this time.
6. If fluid contamination or transmission failure is confirmed by the sediment in the bottom of the fluid pan, the transmission must be disassembled and completely cleaned. This includes the torque converter coolers and cooler lines.
7. Perform diagnostic checks and adjustments; refer to Diagnosis by Symptom in this section.

Road Testing Vehicle

NOTE: Always drive the vehicle in a safe manner according to the driving conditions and obey all traffic laws.

The Shift Point Road Test and Torque Converter Operation Tests provide diagnostic information on transmission shift controls and torque converter operation.

Shift Point Road Test

This test verifies that the shift control system is operating properly.

1. Bring engine and transmission up to normal operating temperature.
2. Operate vehicle with transmission range selector lever in Ⓓ position.
3. **NOTE:** Shift speed ranges are approximate for all applications. For specific applications (engine, axle ratio and application) refer to the Automatic Transmission Specification Issue FPS-12180-1998, available from Ford Customer Service Division.

   Apply minimum throttle and observe speeds at which upshift occurs and torque converter engages; refer to shift speed chart.
4. With vehicle in Overdrive (fourth gear), press transmission control switch. Transmission should downshift to third gear. Remove foot from accelerator pedal; engine braking should occur.
5. Press accelerator pedal to floor (WOT). Transmission should shift from third to second gear, or third to first depending on vehicle speed. Torque converter clutch should disengage and then reapply.

Official Licensed Product
Ford Motor Company

DIAGNOSIS AND TESTING (Continued)

6. With vehicle in D position and speed above 80 km/h (50 mph) and less than half throttle, move the transmission range selector lever from D position to manual 2 position and remove foot from accelerator pedal. Transmission should immediately downshift into second gear. With vehicle remaining in manual 2 position, move the shift control selector lever into manual 1 position, and release accelerator pedal. Transmission should downshift into first gear at speeds below 48-56 km/h (30-35 mph).
7. If transmission fails to upshift/downshift or torque converter clutch does not apply and release, refer to Diagnosis by Symptom Index.

4R70W Shift Speeds

Throttle Position	Shift	Km/H	MPH
Light Throttle	1-2	18-31	7-12
	2-3	52-62	20-24
	3-4	89-98	34-38
Closed Throttle	4-3	78-83	30-32
	3-2	29-42	12-16
	2-1	26-15	10-6
Wide Open Throttle	1-2	129-142	50-55
	2-3	243-259	94-100
	3-2	196	76
	2-1	103	40

Official Licensed Product
Ford Motor Company

Torque Converter Diagnosis

Prior to torque converter replacement, all diagnostic procedures must be followed. This is to prevent the unnecessary replacement of good torque converters (7902) . Only after a complete diagnostic evaluation can the decision be made to replace the torque converter.

Begin with the normal diagnostic procedures as follows:

1. Preliminary Inspection.
2. Know and Understand the Customer's Concern.
3. Verify the Concern — Perform the Torque Converter Operation Test; refer to Torque Converter Operation Test in this section.
4. Perform Diagnostic Procedures.
   - Run on-board diagnostics; refer to the procedure in this section.
     - — Repair all non-transmission related DTCs first.
     - — Repair all transmission DTCs.
     - — Rerun on-board diagnostic to verify repair.
   - Perform Line Pressure Test; refer to Line Pressure Test in this section.
   - Perform Stall Speed Test; refer to Stall Speed Test in this section.
   - Perform Diagnostic by Symptom Routines; refer to Diagnosis by Symptom in this section.
     - — Use the Diagnosis by Symptom Index to locate the appropriate routine that best describes the symptom(s). The routine will list all possible components that may cause or contribute to the symptom. Check each component listed; diagnose and repair as required before repairing the torque converter.

Torque Converter Operation Test

This test verifies that the torque converter clutch control system and the torque converter are operating properly.

1. Perform Quick Test. Check for DTCs; refer to diagnostic trouble code chart.
2. Connect a tachometer to the engine.
3. Bring the engine to normal operating temperature by driving the vehicle at highway speeds for approximately 15 minutes in D position.

DIAGNOSIS AND TESTING (Continued)

4. After normal operating temperature is reached, maintain a constant vehicle speed of about 80 km/h (50 mph) and tap brake pedal with the left foot.
5. Engine rpm should increase when brake pedal is tapped, and decrease about five seconds after pedal is released. If this does not occur, refer to Torque Converter Operation Concerns in the Diagnosis by Symptom Index.
6. If the vehicle stalls in D or manual 2 at idle with vehicle at a stop, move the transmission range selector lever to manual 1 position. If the vehicle stalls, refer to Torque Converter Operation Concerns in the Diagnosis by Symptom section. Repair as required. If the vehicle does not stall in D refer to diagnosis by symptom.

Visual Inspection

This inspection will identify modifications or additions to the vehicle operating system that may affect diagnosis. Inspect the vehicle for non-Ford factory add-on devices such as:

- Electronic add-on items:
  - — Air conditioning
  - — Generator (alternator)
  - — Engine turbo
  - — Cellular telephone
  - — Cruise control
  - — CB radio
  - — Linear booster
  - — Backup alarm signal
  - — Computer
- Vehicle modification:

These items, if not installed properly, will affect the powertrain control module (PCM), or transmission function. Pay particular attention to add-on wiring splices in the PCM harness or transmission wiring harness, abnormal tire size, or axle ratio changes.

- Leaks; refer to Leak Inspection in this section.
- Proper linkage adjustments; refer to Section 307-05.

Shift Linkage Check

Check for a misadjustment in shift linkage by matching the detents in the transmission range selector lever with those of the manual lever in the transmission. If they match, the misadjustment is in the indicator. Do not adjust the shift linkage.

Hydraulic leakage at the manual control valve can cause delay in engagements and/or slipping while operating if the linkage is not correctly adjusted. Refer to Section 307-05 for shift linkage adjustment.

Check TSBs and OASIS

Refer to all technical service bulletins and OASIS messages which pertain to the transmission concern and follow the procedure as described.

Perform On-Board Diagnostics (KOEO, KOER)

After a road test, with the vehicle warm and before disconnecting any connectors, perform the Quick Test using New Generation STAR (NGS) Tester. Refer to Section 4A in the Powertrain Control/Emissions Diagnosis Manual [2].

Official Licensed Product
Ford Motor Company

Diagnostics

Special Tool(s)

ST1627-A	AOD-E/4R70W Cable and Overlay 418-F110 (007-00122) or equivalent
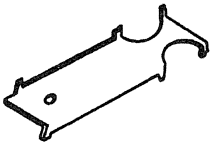 ST1633-A	Digital Transmission Range Sensor Alignment Tool 307-351 (T97L-70010-A)

(Continued)

2 Can be purchased as a separate item.

DIAGNOSIS AND TESTING (Continued)

Special Tool(s)

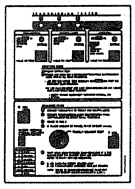	Digital TRS Sensor Overlay 007-00131 or equivalent
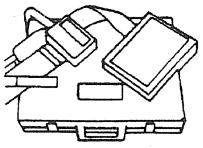 ST1391-A	EEC-V 104-Pin Breakout Box 418-049 (014-00950) or equivalent
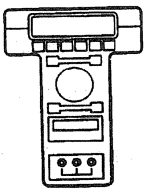 ST1217-A	New Generation Star (NGS) Tester 418-F048 (007-00500) or equivalent
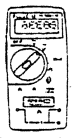 ST1137-A	73 Digital Multimeter 105-R0051 or equivalent
 ST1632-A	TRS-E Cable 418-F107 (007-00111) or equivalent
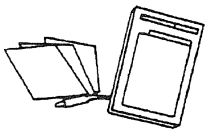 ST1389-A	Transmission Tester 007-00130 or equivalent
 ST1300-A	12 Volt Master UV Diagnostic Inspection Kit 164-R0756 or equivalent

(Continued)

Special Tool(s)

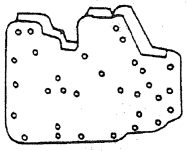 ST1392-A	AOD-E Transmission Test Plate 307-246 (T92P-7006-A)
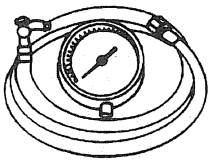 ST1565-A	Pressure Gauge 307-004 (T57L-77820-A)

Diagnosing an electronically controlled automatic transmission is simplified by using the following procedures. One of the most important things to remember is that there is a definite procedure to follow. DO NOT TAKE SHORT CUTS OR ASSUME THAT CRITICAL CHECKS OR ADJUSTMENTS HAVE ALREADY BEEN MADE. Follow the procedures as written to avoid missing critical components or steps. By following the diagnostic sequence, the technician will be able to diagnose and repair the concern the first time.

On-Board Diagnostics With NGS

NOTE: For detailed instruction and other diagnostic methods using the NGS; refer to the NGS tester manual and the Powertrain Control/Emissions Diagnosis Manual [3] manual. These quick tests should be used to diagnose the powertrain control module and should be performed in order.

- Quick Test 1.0 — Visual Inspection
- Quick Test 2.0 — Set Up
- Quick Test 3.0 — Key On, Engine Off (KOEO)
- Quick Test 4.0 — Continuous Memory Codes
- Quick Test 5.0 — Key On, Engine Running (KOER)
  - — Special Test Mode
  - — Wiggle Test
- Output Test Mode
- PCM Reset Mode
- Clearing DTCs
- OBD II Drive Cycle
- Other NGS Features

3 Can be purchased as a separate item.

DIAGNOSIS AND TESTING (Continued)

For further information on other diagnostic testing features using the NGS or generic scan tool, refer to the Powertrain Control/Emissions Diagnosis Manual [4]. Other diagnostic methods include the following:

— Parameter Identification (PID) Access Mode

— Freeze Frame Data Access Mode

— Oxygen Sensor Monitor Mode

Output State Control (OSC) Mode

Output State Control (OSC) allows the technician to take control of certain parameters to function the transmission. For example, OSC allows the technician to shift the transmission only when he/she commands a gear change. If the technician commands 1st gear in OSC, the transmission will remain in 1st gear until the technician commands the next gear. Another example, the technician can command a shift solenoid to turn on or off when performing an electrical circuit check. OSC has two modes of operation for transmission, the BENCH MODE and the DRIVE MODE. Each mode/parameter has a unique set of vehicle operating requirements that the technician is required to meet before being allowed to operate OSC.

NOTE: To operate OSC the digital transmission range (TR) sensor and the vehicle speed sensor (VSS) must be operational. No Diagnostic Trouble Codes (DTCs) related to the digital TR sensor or the VSS sensor can be present.

- The vehicle requirements MUST BE MET when SENDING the OSC value. Refer to individual test modes for vehicle requirements.
- If the vehicle requirements are NOT MET when SENDING the OSC value, and ERROR MESSAGE will appear. When the ERROR MESSAGE is received, OSC is aborted and must be restarted.
- If AFTER SENDING an OSC value, and the vehicle requirements are no longer met, the PCM will cancel the OSC value and NO ERROR message will appear.
- The OSC value [XXX] may be sent anytime to cancel OSC.

Output State Control (OSC) Procedures:

- Perform visual inspection and vehicle preparation as required.
- Select ''Vehicle and Engine Selection'' menu.
- Select appropriate vehicle and engine.
- Select ''Diagnostic Data Link.''
- Select ''Powertrain Control Module.''
- Select ''Output Test Mode.''
- Select ''KOEO On-Demand Self Test and KOER On-Demand Self Tests.''
- Perform test and record DTCs.
- Repair all NON-Transmission DTCs.
- Repair all VSS and digital TR Sensor DTCs.
- Ensure that VSS/digital TR Sensors are functional.
- Select ''Active Command Modes.''
- Select ''Trans - Bench Mode or Trans - Drive Mode.''

OSC — Transmission Bench Modes

The following Transmission Bench Modes may be used or required during diagnostics.

SSA/SS1, SSB/SS2 and TCC in BENCH MODE:

The BENCH MODE allows the technician to perform electrical circuit checks on the following components:

- SSA/SS1 - Activates SSA/SS1 OFF or ON.
- SSB/SS2 - Activates SSB/SS2 OFF or ON.
- TCC - Activates TCC OFF or ON.

OSC ''SSA/SS1, SSB/SS2, TCC'' BENCH MODE Operates ONLY when:

- VSS and digital TR sensor are operational.
- no VSS and digital TR sensor DTCs.
- transmission range selector lever in P.
- key ON.
- engine OFF.

OSC Command Values

- [OFF] - turns solenoid OFF.
- [ON] - turns solenoid ON.
- [XXX] - cancels OSC value sent.
- [SEND] - sends the values to PCM.

BENCH MODE Procedure for SSA/SS1, SSB/SS2 and TCC

Follow operating instructions from the NGS menu screen:

- Select ''Output State Control.''
- Select ''Trans - Bench Mode.''

4 Can be purchased as a separate item.

DIAGNOSIS AND TESTING (Continued)

- Select ''PIDs'' to be monitored.
- Monitor all selected PIDs during test.
- Select ''Parameters - SSA/SS1, SSB/SS2 or TCC.''
- Select ''ON'' to turn solenoid ON.
- Press ''SEND'' to send command ON.
- Select ''OFF'' to turn solenoid OFF.
- Press ''SEND'' to send command OFF.
- Select ''XXX'' to cancel at any time.
- Press ''SEND.''

EPC in BENCH MODE:

The BENCH MODE is also used to test the functionality of the transmission's electronic pressure control. During BENCH MODE, the EPC solenoid can ramp in increments of 15 PSI from zero to 90 PSI and 90 to zero PSI.

The OSC functions for the parameter EPC allows the technician to choose the following options:

- EPC - Activates EPC to selected values.
- [00] - sets EPC pressure to 00 kPa (00 PSI).
- [15] - sets EPC pressure to 103 kPa (15 PSI).
- [30] - sets EPC pressure to 206 kPa (30 PSI).
- [45] - sets EPC pressure to 310 kPa (45 PSI).
- [60] - sets EPC pressure to 411 kPa (60 PSI).
- [75] - sets EPC pressure to 517 kPa (75 PSI).
- [90] - sets EPC pressure to 620 kPa (90 PSI).

OSC ''EPC'' BENCH MODE Operates ONLY when:

- VSS and digital TR sensor are operational.
- No VSS and digital TR sensor DTCs.
- Transmission range selector lever in P.
- Pressure gauge installed.
- Key ON.
- Engine ON.
- Engine RPM at 1500.

OSC Command Values

- [00] - sets EPC pressure to 00 kPa (00 PSI).
- [15] - sets EPC pressure to 103 kPa (15 PSI).
- [30] - sets EPC pressure to 206 kPa (30 PSI).
- [45] - sets EPC pressure to 310 kPa (45 PSI).
- [60] - sets EPC pressure to 411 kPa (60 PSI).
- [75] - sets EPC pressure to 517 kPa (75 PSI).
- [90] - sets EPC pressure to 620 kPa (90 PSI).
- [OFF] - turns solenoid off.
- [ON] - turns solenoid on.
- [XXX] - cancels OSC value sent.
- [SEND] - sends the values to PCM.

BENCH MODE Procedure for EPC

Following operating instructions from the NGS menu screen.

- Select ''Output State Control.''
- Select ''Trans - Bench Mode.''
- Select ''PIDs'' to be monitored.
- Monitor all selected PIDs during test.
- Select ''Parameters - EPC.''
- Select Value ''0-620 kPa (0-90 psi).''
- Press ''SEND'' to send command.
- Select ''XXX'' to cancel at any time.
- Press ''SEND.''

Official Licensed Product Ford Motor Company

OSC — Transmission DRIVE MODES

The DRIVE MODE allows control of three transmission parameters. Each mode/parameter has a unique set of vehicle operating requirements that the technician is required to meet before being allowed to operate OSC. The recommended procedure, when using the DRIVE MODE, is to control one parameter at a time.

The DRIVE MODE allows the technician to perform the following functions on the transmission:

- GR__CM - allows upshifts or downshifts.
- TCC - engages or disengages the torque converter clutch.
- EPC - increases/decreases EPC pressure.

GR__CM in DRIVE MODE

This OSC function is used to test the transmission shift functions.

The OSC functions for the GR__CM parameter allows the technician to choose the following options:

- [1] - PCM selects 1st gear.
- [2] - PCM selects 2nd gear.

DIAGNOSIS AND TESTING (Continued)

- [3] - PCM selects 3rd gear.
- [4] - PCM selects 4th gear.
- [5] - PCM selects 5th gear.

OSC "GR__CM" Mode Operates ONLY when:

- VSS and digital TR sensor are operational.
- No VSS and digital TR sensor DTCs.
- Engine "ON."
- TCC "OFF."
- Transmission range selector lever on O/D.
- Vehicle Speed is greater than 2 mph.

OSC Command Values

- [1] - PCM selects 1st gear.
- [2] - PCM selects 2nd gear.
- [3] - PCM selects 3rd gear.
- [4] - PCM selects 4th gear.
- [5] - PCM selects 5th gear.
- [OFF] - turns solenoid off.
- [ON] - turns solenoid on.
- [XXX] - cancels OSC value sent.
- [SEND] - sends the values to PCM.

DRIVE MODE Procedure for GR__CM

Follow operating instructions from the NGS menu screen.

- Select "Output State Control."
- Select "Trans - DRIVE MODE."
- Select "PIDs" to be monitored.
- Monitor all selected PIDs during test.
- Select "Parameters - GR__CM."
- Select Value "1-5."
- Press "SEND" to send command.
- Re-Select Value "1-5."
- Press "SEND" to send command.
- Select "XXX" to cancel at any time.
- Press "SEND."

TCC in DRIVE MODE:

This OSC function is used to test whether the torque converter clutch is engaging and disengaging correctly.

The OSC functions for the TCC parameter allows the technician to choose the following:

- TCC - activates TCC OFF and ON.
- [ON] - turns TCC solenoid ON.
- [OFF] - turns TCC solenoid OFF.

OSC "TCC OFF" DRIVE MODE Operates ONLY when:

- VSS and digital TR sensors are operational.
- No VSS and digital TR sensor DTCs present.
- Engine ON.
- Transmission range selector lever in O/D.
- Vehicle speed is greater than 2 mph.

OSC "TCC ON" DRIVE MODE Operates ONLY when:

- VSS and digital TR sensors are operational.
- No VSS and digital TR sensor DTCs present.
- Engine ON.
- Transmission range selector lever in O/D.
- Vehicle speed is greater than 3.2 km/h (2 mph).
- Transmission in 2nd gear or higher.
- TFT is between 15-135°C (60 and 275°F).
- Brake not applied "OFF" below 32 mph (20 mph).
- (Not an excessive load on engine (engine lugging).

OSC Command Values

- [OFF] - turns TCC OFF.
- [ON] - turns TCC ON.
- [XXX] - cancels OSC value sent.
- [SEND] - sends the values to PCM.

Drive Mode Procedures for TCC

Follow operating instructions from the NGS menu screen.

- Select "Output State Control."
- Select "Trans - Drive Mode."
- Select "PIDs" to be monitored.
- Monitor all selected PIDs during test.
- Select "Parameters - TCC."
- Select "ON" to turn solenoid ON.
- Press "SEND" to send command ON.

Official Licensed Product
Ford Motor Company

DIAGNOSIS AND TESTING (Continued)

- Select ''OFF'' to turn solenoid OFF.
- Press ''SEND'' to send command OFF.
- Select ''XXX'' to cancel at any time.
- Press ''SEND.''

EPC in DRIVE MODE

This OSC functions is used to increase the EPC pressure while testing the transmission shift functions. This OSC functions can only increase the EPC pressure greater than what the PCM normally commands. If an OSC value, such as [75] or [90] PSI is sent, the upshifts and downshifts should exhibit a harsher shift. Harsher shifts would indicate that the EPC pressure control works at higher pressures. The best test for the EPC is to use the BENCH MODE and a hydraulic pressure gauge. Using EPC in the BENCH MODE will confirm that the EPC works at both the higher and lower pressures.

The OSC functions for the parameter EPC allows the technician to choose the following options:

- EPC - Activates EPC to selected
  - [00] - sets EPC pressure to 00 kPa (00 PSI).
  - [15] - sets EPC pressure to 103 kPa (15 PSI).
  - [30] - sets EPC pressure to 206 kPa (30 PSI).
  - [45] - sets EPC pressure to 310 kPa (45 PSI).
  - [60] - sets EPC pressure to 411 kPa (60 PSI).
  - [75] - sets EPC pressure to 517 kPa (75 PSI).
  - [90] - sets EPC pressure to 620 kPa (90 PSI).

OSC ''EPC'' DRIVE MODE Operates ONLY when:

- VSS and digital TR sensor are operational.
- No VSS and digital TR sensor DTCs.
- Transmission Range Selector Lever in O/D.
- Pressure gauge installed.
- Key ON.
- Engine ON.
- Vehicle speed greater than 2 mph.
- OSC value for EPC must be greater than what the PCM commands (see EPC PID).

OSC Command Values

- [00] - sets EPC pressure to 00 kPa (00 PSI).
- [15] - sets EPC pressure to 103 kPa (15 PSI).
- [30] - sets EPC pressure to 206 kPa (30 PSI).
- [45] - sets EPC pressure to 310 kPa (45 PSI).
- [60] - sets EPC pressure to 411 kPa (60 PSI).
- [75] - sets EPC pressure to 517 kPa (75 PSI).
- [90] - sets EPC pressure to 620 kPa (90 PSI).
- [OFF] -'' turns solenoid off.
- [ON] - turns solenoid on.
- [XXX] - cancels OSC value sent.
- [SEND] - sends the values to PCM.

DRIVE MODE Procedure for EPC.

Follow operating instructions from the NGS menu screen.

- Select ''Output State Control.''
- Select ''Trans - Drive Mode.''
- Select ''PIDs'' to be monitored.
- Monitor all selected PIDs during test.
- Select ''Parameters - EPC.''
- Select Value ''0-620 kPa (0-90 psi).''
- Press ''SEND'' to send command.
- Re-Select Value ''0-620 kPa (0-90 psi).''
- Press ''SEND'' to send command.
- Select ''XXX'' to cancel at any time.
- Press ''SEND.''

Using Output State Control (OSC) and Accessing PIDs

To confirm that the OSC value was sent by the NGS and the EEC has accepted the OSC substitution, a corresponding PID for each OSC parameter must be monitored. Additional PIDs should be monitored to help the technician adequately diagnose the transmission.

The following is a list of OSC parameters and their corresponding PID:

OSC PARAMETER CHART

OSC Parameter	PID	Additional PIDs
SSA/SS1	SSA/SS1	SS1F
SSB/SS2	SSB/SS2	SS2F
TCC	TCC	TCCF, TCCMACT (do not use PID TCCMCMD during OSC)
EPC	EPC	—
GR__CM	GEAR	TRANRAT

©Ford Licensed Product Ford Motor Company®

DIAGNOSIS AND TESTING (Continued)

To confirm that the OSC substitution occurred, SEND the OSC value and monitor the corresponding PID value. If no ERROR MESSAGE was received and the value of the corresponding PID remains the same as the value sent from OSC, then the OSC substitution was successful.

Transmission Drive Cycle Test

NOTE: Always drive the vehicle in a safe manner according to driving conditions and obey all traffic laws.

NOTE: The Transmission Drive Cycle Test must be followed exactly. Malfunctions must occur four times consecutively for shift error DTC code to be set, and five times consecutively for continuous torque converter clutch code to set.

NOTE: When performing the Transmission Drive Cycle Test, refer to the Solenoid Application Chart for proper solenoid operation.

After performing the Quick Test, use the Transmission Drive Cycle Test for checking continuous codes.

1. Record and then erase Quick Test codes.
2. Warm engine to normal operating temperature.
3. Make sure transmission fluid level is correct.
4. With transmission in Overdrive, moderately accelerate from stop to 80 km/h (50 mph). This allows the transmission to shift into fourth gear. Hold speed and throttle open steady for a minimum of 15 seconds.
5. With transmission in Overdrive, press TCS (TCIL should illuminate) and moderately accelerate from stop to 64 km/h (40 mph). This allows the transmission to shift into third gear. Hold speed and throttle open steady for a minimum of 15 seconds (30 seconds above 4000 ft altitude).
6. Press TCS (TCIL should turn off) and accelerate from 64 km/h (40 mph) to 80 km/h (50 mph). This allows transmission to shift into fourth gear. Hold speed and throttle position steady for a minimum of 15 seconds.
7. With transmission in fourth gear and maintaining steady speed and throttle opening, lightly apply and release brake to operate stoplamps. Then hold speed and throttle steady for a minimum of five seconds.
8. Brake to a stop and remain stopped for a minimum of 20 seconds.
9. Repeat steps 4 through 8 at least five times.
10. Perform Quick Test and record continuous DTCs.

After On-Board Diagnostic

NOTE: The vehicle wiring harness, powertrain control module (PCM)(12A650) and non-transmission sensors may affect transmission operations. Repair these concerns first.

After the on-board diagnostic procedures are completed, repair all DTCs.

Begin with non-transmission related DTCs, then repair any transmission related DTCs. Refer to the Diagnostic Trouble Code Chart for information on condition and symptoms. This chart will be helpful in referring to the proper manual(s) and aids in diagnosing internal transmission concerns and external non-transmission inputs. The pinpoint tests are used in diagnosing transmission electrical concerns. Make sure that the vehicle wiring harness and the PCM are diagnosed as well. The Powertrain Control/Emissions Diagnosis Manual [5] will aid in diagnosing non-transmission electronic components.

Before Pinpoint Tests

NOTE: Prior to entering pinpoint tests, check the powertrain control module (PCM) wiring harness for proper connections, bent or broken pins, corrosion, loose wires, proper routing, proper seals and their condition. Check the PCM, sensors and actuators for damage. Refer to the Powertrain Control/Emissions Diagnosis Manual [5].

NOTE: If a concern still exists after electrical diagnosis has been performed, refer to Diagnosis by Symptom in this section.

If DTCs appear while performing the on-board diagnostics, refer to the Diagnostic Trouble Code Chart for the appropriate repair procedure. Prior to entering pinpoint tests, refer to any TSBs and OASIS messages for transmission concerns.

Official Licensed Ford Motor Company

5 Can be purchased as a separate item.

DIAGNOSIS AND TESTING (Continued)

Diagnostic Trouble Code Chart

Four Digit DTC	Component	Description	Condition	Symptom	Action
P0102 P0103 P1100 P1101	MAF	MAF concerns	MAF system has a malfunction which may cause a transmission concern.	High or low EPC pressure, incorrect shift schedule. Incorrect torque converter clutch engagement scheduling. Symptoms similar to a TP failure.	Refer to PC/ED
P0112	IAT	IAT indicates 125°C (257°F) (grounded)	Voltage drop across IAT exceeds scale set for temperature 125°C (257°F).	Incorrect EPC pressure, either high or low, results in harsh or soft shifts.	Refer to PC/ED
P0113	IAT	IAT indicates -40°C (-40°F) (open circuit)	Voltage drop across IAT exceeds scale set for temperature -40°C (-40°F).	Incorrect EPC pressure, either high or low, results in harsh or soft shifts.	Refer to PC/ED
P0114	IAT	IAT out of on-board diagnostic range	IAT temperature higher or lower than expected during KOEO and KOER.	Rerun on-board diagnostic at normal operating temperature.	Refer to PC/ED
P0117	ECT	ECT indicates 125°C (257°F)	Voltage drop across ECT exceeds scale set for temperature 125°C (257°F) (grounded).	Torque converter clutch will always be off, resulting in reduced fuel economy.	Refer to PC/ED
P0118	ECT	ECT indicates -40°C (-40°F)	Voltage drop across ECT exceeds scale set for temperature -40°C (-40°F) (open circuit).	Torque converter clutch will always be off, resulting in reduced fuel economy.	Refer to PC/ED
P0122 P0123 P1120	TP	TP concern	PCM has detected an error that may cause a transmission concern.	Harsh engagements, firm shift feel, abnormal shift schedule, torque converter clutch does not engage, torque converter clutch cycling.	Refer to PC/ED
P0300- P0308 P0320 P0340 P1351- P1364	EI	EI systems concerns	EI system has a malfunction which may cause a transmission concern.	Harsh engagements and shifts, late WOT shifts, no torque converter clutch engagement.	Refer to PC/ED
P0501 P0503 P0500 P1500 P1501	VSS	Insufficient VSS input	PCM detected a loss of vehicle speed signal during operation.	Torque converter clutch engages, shift engagement or disengagement (hunting) on grades.	Refer to PC/ED
P0705	Digital TR Sensor	Digital TR sensor malfunction	Digital TR sensor, circuit or PCM indicates short.	Increase in EPC pressure.	Refer to Pinpoint Test D.
P0707	Digital TR Sensor, Wiring, PCM	Digital TR sensor circuit below minimum voltage	Digital TR sensor, circuit or PCM shorted or grounded.	Increase in EPC pressure.	Refer to Pinpoint Test D.
P0708	Digital TR Sensor, Wiring, PCM	Digital TR sensor circuit above maximum voltage	Digital TR sensor, circuit or PCM indicates open.	Increase in EPC pressure.	Refer to Pinpoint Test D.

(Continued)

DIAGNOSIS AND TESTING (Continued)

Diagnostic Trouble Code Chart

Four Digit DTC	Component	Description	Condition	Symptom	Action
P0712	TFT, Wiring, PCM	157°C (315°F) indicated TFT sensor circuit grounded	Voltage drop across TFT sensor exceeds scale set for temperature of 157°C (315°F).	Firm shift feel.	Refer to Pinpoint Test B.
P0713	TFT, Wiring, PCM	-40°C (-40°F) indicated TFT sensor circuit open	Voltage drop across TFT sensor exceeds scale set for temperature -40°C (-40°F).	Firm shift feel.	Refer to Pinpoint Test B.
P0720	OSS	Insufficient input from output shaft speed sensor	PCM detected a loss of OSS signal during operation.	Harsh shifts, abnormal shift schedule, no torque converter clutch activation.	Refer to Pinpoint Test F.
P0721	OSS	Output shaft speed sensor signal noisy	PCM has detected an erratic OSS signal.	Harsh shifts, abnormal shift schedule, no torque converter clutch engagement.	Refer to Pinpoint Test F.
P0741**	TCC, Internal Components	TCC slippage detected	The PCM picked up an excessive amount of slippage during normal vehicle operation.	TCC slippage/erratic or no torque converter clutch operation. Flashing TCIL.	Refer to Diagnosis by Symptom Index.
P0743*	TCC, Wiring, PCM	TCC solenoid circuit failure during on-board diagnostic	TCC solenoid circuit fails to provide voltage drop across solenoid. Circuit open or shorted or PCM driver failure during on-board diagnostic.	Short circuit: engine stalls in second (OD, 2 range) at low idle speeds with brake applied. Open circuit: torque converter clutch never engages.	Refer to Pinpoint Test A.
P0750*	SSA/SS1, Wiring, PCM	SSA/SS1 solenoid circuit failure	SSA/SS1 circuit failed to provide voltage drop across solenoid. Circuit open or shorted or PCM driver failure during on-board diagnostic.	Improper gear selection depending on condition mode and manual lever position. See Solenoid On/Off chart.	Refer to Pinpoint Test A.
P0751	SSA/SS1, Wiring, PCM	Shift solenoid A (1) functional failure	Mechanical or hydraulic failure of the shift solenoid.	Improper gear selection depending on failure mode manual lever position.	Refer to Solenoid On/Off chart. Refer to Pinpoint Test A.
P0755*	SSB/SS2, Wiring, PCM	SSB/SS2 solenoid circuit failure	SSB/SS2 circuit fails to provide voltage drop across solenoid. Circuit open or shorted or PCM driver failure during on-board diagnostic.	Improper gear selection depending on condition mode and manual lever position. See Solenoid On/Off chart.	Refer to Pinpoint Test A.
—	TCIL	TCIL circuit failure	TCIL circuit open or shorted.	Failed on, OD cancel mode on. No flashing TCIL for EPC failure or sensor. Failed off, OD cancel mode never indicated. No flashing TCIL for EPC sensor failure.	Refer to PC/ED

(Continued)

DIAGNOSIS AND TESTING (Continued)

Diagnostic Trouble Code Chart

Four Digit DTC	Component	Description	Condition	Symptom	Action
P0756	SSB/SS2	Shift solenoid B (2) functional failure	Mechanical or hydraulic failure of the shift solenoid.	Improper gear selection depending on failure mode and manual lever position.	Refer to Solenoid On/Off chart. Refer to Pinpoint Test A.
P0781**	SSA/SS1 or internal parts	1-2 shift error	Engine rpm drop not detected when 1-2 shift was commanded by PCM.	Improper gear selection depending on failure or mode and manual lever position. Shift errors may also be due to other internal transmission concerns (stuck valves, damaged friction material).	Refer to Solenoid On/Off Charts. Refer to Pinpoint Test A.
P0782**	SSA/SS1, SSB/SS2 or internal parts	2-3 shift error	Engine rpm drop not detected when 2-3 shift was commanded by PCM.	Improper gear selection depending on failure or mode and manual lever position. Shift errors may also be due to other internal transmission concerns (stuck valves, damaged friction material).	Refer to Solenoid On/Off Charts. Refer to Pinpoint Test A.
P0783**	SSA/SS1, SSB/SS2 or internal parts	3-4 shift error	Engine rpm drop not detected when 3-4 shift was commanded by PCM.	Improper gear selection depending on failure or mode and manual lever position. Shift errors may also be due to other internal transmission concerns (stuck valves, damaged friction material).	Refer to Solenoid On/Off Charts. Refer to Pinpoint Test A.
P1116	ECT	ECT out of on-board diagnostic range	ECT temperature higher or lower than expected during KOEO and KOER.	Rerun on-board diagnostic at normal operating temperature.	Refer to PC/ED
P1124	TP	TP voltage high/low for on-board diagnostic	TP was not in the correct position for on-board diagnostic.	Rerun at appropriate throttle position per application.	Refer to PC/ED
P1460	A/C	A/C clutch cycling pressure switch error	A/C or defrost on condition may result from A/C clutch being on during on-board diagnostic.	DTC set during on-board diagnostic, rerun with A/C off. Failed on, EPC pressure slightly low with A/C OFF.	Refer to PC/ED
P1703	BPP	BPP switch circuit failed.	Brake ON/OFF circuit failure.	Failed ON or not connected — torque converter clutch will not engage at less than 1/3 throttle. Failed OFF or not connected — torque converter clutch will not disengage when brake is applied.	Refer to PC/ED

(Continued)

Official Licensed Product

DIAGNOSIS AND TESTING (Continued)

Diagnostic Trouble Code Chart

Four Digit DTC	Component	Description	Condition	Symptom	Action
P1703	BPP	Brake not actuated during on-board diagnostic	Brake not cycled during KOER.	Failed OFF or not connected — torque converter clutch will not engage at less than 1/3 throttle. Failed OFF or not connected — torque converter clutch will not disengage when brake is applied.	Refer to PC/ED
P1705	Digital TR Sensor	Digital TR sensor not indicating Park during KOEO	On-board diagnostic not run in Park.	Rerun on-board diagnostic in Park.	Refer to Pinpoint Test D.
P1710	TFT	TFT sensor in range malfunction	PCM detected TFT not changing.	Firm shift, TCIL flashing, increase in EPC.	Refer to Pinpoint Test B.
P1711	TFT	TFT out of on-board diagnostic range	Transmission not at operating temperature during on-board diagnostic.	Warm vehicle to normal operating temperature.	Refer to Pinpoint Test B.
P1714	SSA/SS1, Internal Components	SSA/SS1 malfunction	Mechanical failure of the solenoid detected.	Improper gear selection depending on condition, mode and manual lever position. See Solenoid Operation Chart.	Refer to Pinpoint Test H.
P1715	SSB/SS2	SSB/SS2 malfunction	Mechanical failure of the solenoid detected.	Improper gear selection depending on condition, mode and manual lever position. See Solenoid Operation Chart.	Refer to Pinpoint Test H.
P1728	Trans	Trans slip error	The PCM has detected an excessive amount of slippage during normal operation.	Transmission slippage/erratic or no torque clutch operation.	Refer to Diagnosis by Symptom Index.
P1740	TCC	TCC malfunction	Mechanical failure of the solenoid detected.	Failed ON — Engine stalls in 2nd (O/D, Manual 2 ranges) at low idle speeds with brake applied. Failed OFF — Torque Converter never applies.	Refer to Pinpoint Test H.
P1741**	TCC, Internal Components	Excessive torque converter clutch engagement error	Excessive variations in slip (engine speed surge) across the torque converter clutch.	Engine rpm oscillation is present in 3rd gear.	Refer to Pinpoint Test A.
P1742	TCC, Internal Components	TCC solenoid failed ON	TCC solenoid has failed on by electric, mechanical or hydraulic concern.	Harsh shifts.	Refer to Pinpoint Test A.
P1743	TCC, Internal Components	TCC solenoid failed ON	TCC solenoid has failed on by electric, mechanical or hydraulic concern.	Harsh shifts.	Refer to Pinpoint Test A.
P1744	TCC	TCC	The PCM picked up an excessive amount of TCC slippage during normal vehicle operation.	TCC slippage/erratic or no torque converter clutch operation.	Refer to Diagnosis by Symptom Index.

(Continued)

Official Licensed Product Ford Motor Company

DIAGNOSIS AND TESTING (Continued)

Diagnostic Trouble Code Chart

Four Digit DTC	Component	Description	Condition	Symptom	Action
P1746*	EPC, Wiring, PCM	Shorted PCM output driver	Voltage through EPC solenoid is checked. An error will be noted if tolerance is exceeded.	Open circuit causes maximum EPC pressure, harsh engagements and shifts.	Refer to Pinpoint Test E.
P1747*	EPC, Wiring, PCM	EPC solenoid circuit failure, shorted circuit or output driver	Voltage through EPC solenoid is checked. An error will be noted if tolerance is exceeded.	Short circuit causes minimum EPC pressure (minimum capacity) and limits engine torque (alternate firm).	Refer to Pinpoint Test E.
P1751**	SSA/SS1	Shift solenoid A (1) functional failure	Mechanical or hydraulic failure of the shift solenoid.	Improper gear selection depending on failure mode and manual lever position.	Refer to Solenoid On/Off chart. Refer to Pinpoint Test A.
P1756**	SSB/SS2	Shift solenoid B (2) functional failure	Mechanical or hydraulic failure of the shift solenoid.	Improper gear selection depending on failure mode and manual lever position.	Refer to Solenoid On/Off chart. Refer to Pinpoint Test A.
P1767	TCC	TCC solenoid circuit failure during OBD Test	TCC solenoid circuit fails to provide voltage drop across solenoid. Circuit open or shorted or PCM Driver failure during OBD Test.	Short Circuit: engine stalls in second (O/D, 2 range) at low idle speeds with brake applied. Open Circuit: Torque Converter never engages.	Refer to Pinpoint Test A.
P1780	TCS	TCS not changing states	TCS not cycled during self-test. TCS circuit open or shorted.	Rerun on-board diagnostic and cycle switch. No OD cancel when switch is cycled.	Refer to PC/ED
P1783	TFT	Transmission overtemperature condition indicated	Transmission fluid temperature exceeded 127°C (270°F).	Increase in EPC pressure.	Refer to Pinpoint Test B.

* Output circuit check, generated only by electrical symptoms.
** May also be generated by some other non-electric transmission hardware system.

PC/ED = Powertrain Control/Emissions Diagnosis Manual [6]

Official Licensed Product

6 Can be purchased as a separate item.

DIAGNOSIS AND TESTING (Continued)

Rotunda Transmission Tester

NOTE: Use the AODE transmission tester overlay to diagnose the 4R70W transmission.

The Rotunda Transmission Tester is used to diagnosis electronically controlled transmission and is used in conjunction with the pinpoint tests. The tests should be performed in order. Installing the Rotunda Transmission Tester allows separation of the vehicle electronics from transmission electronics; refer to the Rotunda Transmission Tester manual for these tests.

- Bench Testing - Engine Off
- Resistance/Continuity Test
- Solenoid Voltage Test
- Dynamic Testing - Engine On
- EPC Solenoid
- Transmission Engagements
- Upshifts/Downshifts
- Torque Converter Clutch (TCC) Engagement
- Output Shaft Speed (OSS) Sensor
- Digital Transmission Range (TR) Sensor Testing
- Resistance/Continuity Test
- Voltage Test - Park/Neutral, Backup Lamp, and Optional Circuits

Transmission Connector Layouts

Transmission Vehicle Harness Connector

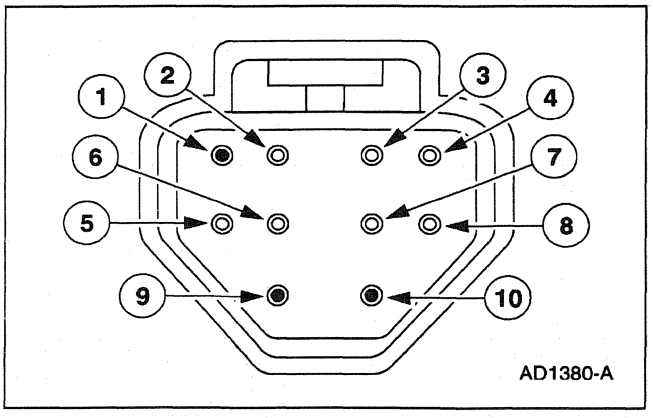

Pin Number	Circuit	Circuit Function
1	—	NOT USED
2	359 (GY/R)	Signal Return
3	473 (R/LB)	Torque Converter Clutch (TCC) Solenoid

(Continued)

Pin Number	Circuit	Circuit Function
4	361 (R)	Vehicle Power
5	923 (O/BK)	Transmission Fluid Temperature (TFT) Input
6	925 (W/Y)	Electronic Pressure Control (EPC) Solenoid
7	237 (O/Y)	Shift Solenoid 1
8	315 (P/O)	Shift Solenoid 2
9	—	NOT USED
10	—	NOT USED

Transmission Internal Harness

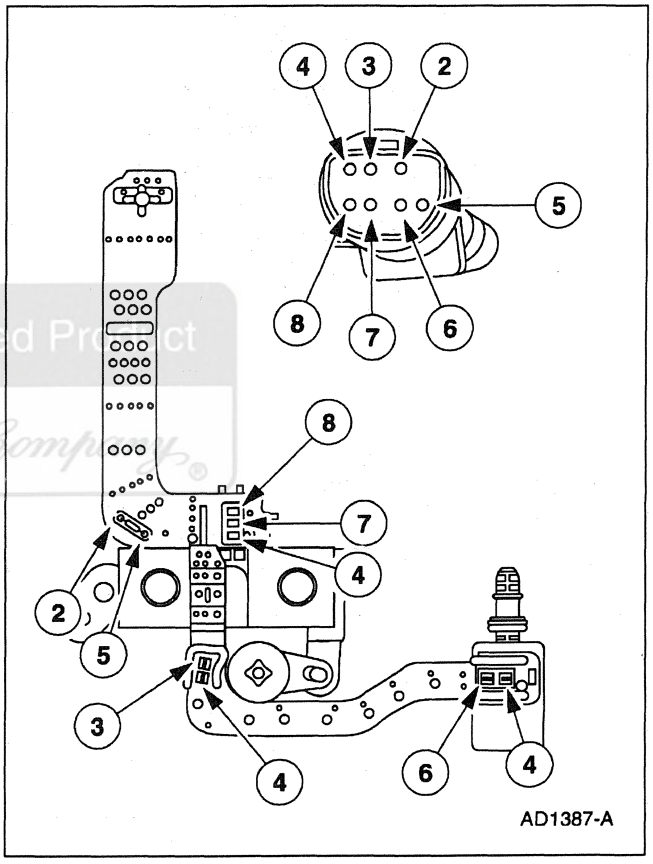

Item	Part Number	Description
1	—	Not Used
2	—	Signal Return-Transmission Fluid Temperature (TFT)
3	—	Torque Converter Clutch (TCC)
4	—	Vehicle Power-Shift Solenoid

(Continued)

Unlicensed Product
Ford Motor Company

DIAGNOSIS AND TESTING (Continued)

Item	Part Number	Description
5	—	Transmission Fluid Temperature (TFT)
6	—	Electronic Pressure Control (EPC)
7	—	SSA/SS1
8	—	SSB/SS2
9	—	Not Used
10	—	Not Used

Digital Transmission Range (TR) Sensor Connector

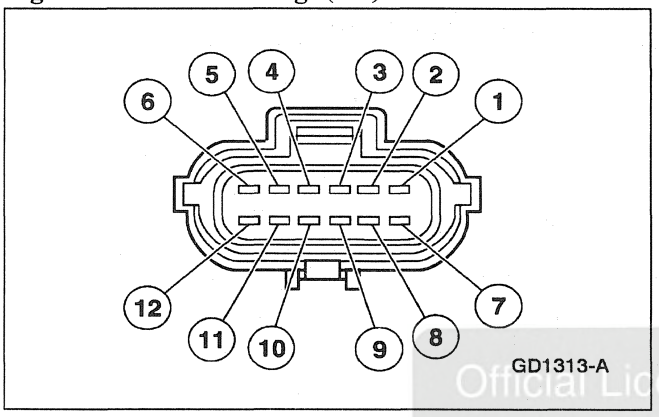

Pin Number	Circuit	EEC-V Pin Number	Circuit Function
1	—	—	NOT USED
2	359 (GY/R)	91	Signal Return
3	199 (LB/Y)	64	TR3A
4	1144 (Y/BK)	3	TR1
5	1145 (LB/BK)	49	TR2
6	1143 (W/BK)	50	TR4
7	—	—	NOT USED
8	—	—	NOT USED
9	1040 (R/BK)	—	Fused Power Feed
10	32 (R/LB)	—	Starter Control
11	140 (BK/PK)	—	Back Up
12	33 (W/PK)	—	Starter to Starter Interrupt Relay

Output Shaft Speed Sensor (OSS) Harness Connector

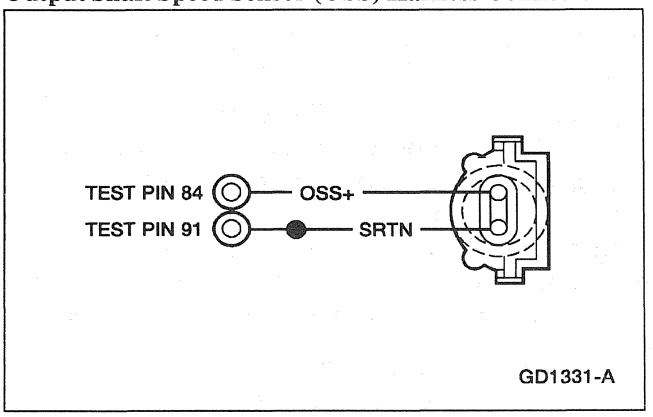

Pinpoint Tests

Any time an electrical connector or solenoid body is disconnected, inspect the connector for terminal condition, corrosion and contamination. Also inspect the connector seal for damage. Clean, repair or replace as required.

Shift Solenoids Pre-Diagnosis

Use the following shift solenoid operation information when performing Pinpoint Test A.

Solenoid Operation Chart

Gear Lever Position	PCM Commanded Gear	Solenoids SSA/SS1	Solenoids SSB/SS2	Solenoids TCC
P/R/N	1	ON	OFF	HD
(D)	1	ON	OFF	HD
(D)	2	OFF	OFF	EC
(D)	3	OFF	ON	EC
(D)	4	ON	ON	EC
(D) w/OD OFF				
1	1	ON	OFF	HD
2	2	OFF	OFF	EC
3	3	OFF	ON	EC
Manual 2	2	OFF	OFF	EC
Manual 1	1	ON	OFF	HD

(Continued)

Official Licensed Product Ford Motor Company

DIAGNOSIS AND TESTING (Continued)

Solenoid Operation Chart

Gear Lever Position	PCM Commanded Gear	Solenoids		
		SSA/ SS1	SSB/ SS2	TCC
[a] 1	2	OFF	OFF	EC

a When a manual pull-in occurs above a calibrated speed the transmission will downshift from the higher gear until the vehicle speed drops below this calibrated speed.

EC = Electronically Controlled.

HD = Hydraulically Disabled.

Shift Solenoid Failure Mode Chart "Always Off"

Failed off due to powertrain control module and/or vehicle wiring concerns, shift solenoid (7G484) electrically or hydraulically stuck off.

SSA/SS1 ALWAYS OFF:	Gear Lever Position		
	D	2	1
PCM Gear Commanded	Actual Gear Obtained		
1	2	2	2
2	2	2	2
3	3	2*	2*
4	3	2*	2*

*No engine braking.

SSB/SS2 ALWAYS OFF:	Gear Lever Position		
	D	2	1
PCM Gear Commanded	Actual Gear Obtained		
1	1	1	1
2	2	2	2
3	2	2	2
4	1	1	1

Shift Solenoid Failure Mode Chart "Always On"

Failed on due to powertrain control module and/or vehicle wiring concerns, shift solenoid electrically or hydraulically stuck on.

SSA/SS1 ALWAYS ON:	Gear Lever Position		
	D	2	1
PCM Gear Commanded	Actual Gear Obtained		
1	1	1	1
2	1	1	1
3	4	2*	2*
4	4	2*	2*

*No engine braking.

SSB/SS2 ALWAYS ON:	Gear Lever Position		
	D	2	1
PCM Gear Commanded	Actual Gear Obtained		
1	4	2*	2*
2	3	2*	2*
3	3	2*	2*
4	4	2*	2*

*No engine braking.

Official Licensed Product Ford Motor Company

DIAGNOSIS AND TESTING (Continued)

PINPOINT TEST A: SHIFT AND TORQUE CONVERTER (TCC) CLUTCH SOLENOIDS

NOTE: Read and record all DTCs. All digital TR Sensor and VSS DTCs must be repaired before entering Output State Control (OSC).

NOTE: Refer to the Transmission Internal Harness Illustration preceding these pinpoint tests.

NOTE: Refer to the Transmission Vehicle Harness Connector Illustration preceding these pinpoint tests.

TEST CONDITIONS	TEST DETAILS/RESULTS/ACTIONS
A1 ELECTRONIC DIAGNOSTICS	
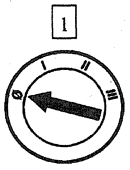 1 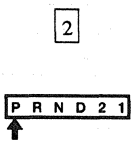 2	3 Check to make sure the transmission harness connector is fully seated, terminals are fully engaged in connector and in good condition before proceeding.
4 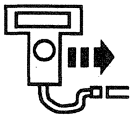 New Generation STAR (NGS) Tester 5 6 Diagnostic Data Link 7 PCM	Off-Road Licensed Product Ford Motor Company
8 Active Command Modes 9 Output State Control (OSC) 10 Trans-Bench Mode	• Does vehicle enter Trans-Bench Mode? → **Yes** REMAIN in Trans-Bench Mode. GO to **A2**. → **No** REPEAT procedure to enter Trans-Bench Mode. If vehicle did not enter Trans-Bench Mode, REFER to Powertrain Control/Emissions Diagnosis Manual [7] for diagnosis of PCM or NGS.
A2 WIGGLE TEST	
	1 Remain on Trans-Bench Mode.

(Continued)

7 Can be purchased as a separate item.

DIAGNOSIS AND TESTING (Continued)

PINPOINT TEST A: SHIFT AND TORQUE CONVERTER (TCC) CLUTCH SOLENOIDS (Continued)

TEST CONDITIONS	TEST DETAILS/RESULTS/ACTIONS
A2 WIGGLE TEST (Continued)	
	2 Select PIDs to be monitored. PID Command: SSA, SSB, TCC PID Actual: SS1F, SS2F, TCCF 3 Select ''ON'' to turn suspect solenoid on. 4 Press ''SEND''. 5 Wiggle all wiring and connectors to the transmission. Monitor the Solenoid State for changes. 6 Select ''OFF'' to turn solenoid off. 7 Press ''SEND''. • Does the suspect solenoid(s) fault state change? → **Yes** REPAIR open or short in the vehicle harness or connector. → **No** GO to **A3**.
A3 SOLENOID FUNCTIONAL CHECK	
	1 Monitor each solenoid state. 2 Turn each solenoid ON and OFF. • Does the solenoid turn ON and OFF when commanded and can solenoid activation be heard? → **Yes** GO to **A4**. → **No** GO to **A5**.
A4 OSC TRANS-DRIVE MODE (GR__CM OR TCC)	
	1 Perform OSC Trans-Drive Mode.

(Continued)

Official Licensed Product Ford Motor Company

DIAGNOSIS AND TESTING (Continued)

PINPOINT TEST A: SHIFT AND TORQUE CONVERTER (TCC) CLUTCH SOLENOIDS (Continued)

TEST CONDITIONS	TEST DETAILS/RESULTS/ACTIONS
A4 OSC TRANS-DRIVE MODE (GR__CM OR TCC) (Continued)	
	2 Select GR__CM for Shift Solenoids or follow procedures for GR__CM as listed in this section. 3 Select TCC for Torque Converter Clutch Solenoid. Follow procedures of TCC in Drive Mode as listed in this section. • Does the transmission upshift and downshift or torque converter engage/disengage when commanded? → **Yes** CLEAR all DTCs. Road test to verify if concern is still present. If concern is still present, REFER to Diagnosis by Symptom to diagnose shift or torque converter concern. → **No** GO to **A5**.
A5 CHECK FOR BATTERY VOLTAGE	
3 4 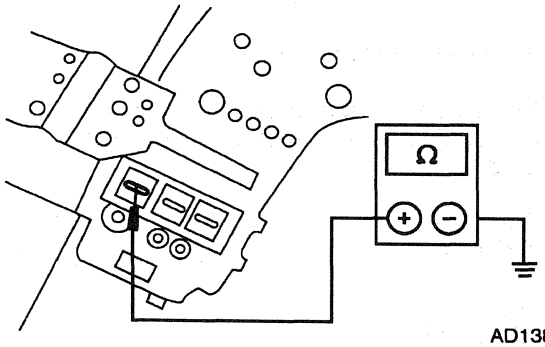 AD1388-A	1 Remove transmission fluid pan. 2 Visually inspect the lead frame and connectors for damage. 4 Connect DVOM positive lead to VPWR solenoid terminal and negative lead to a good ground. • Is the battery voltage present? → **Yes** GO to **A6**. → **No** CHECK for open or short circuit in harness, or solenoid.

Official Licensed Product
Ford Motor Company

(Continued)

DIAGNOSIS AND TESTING (Continued)

PINPOINT TEST A: SHIFT AND TORQUE CONVERTER (TCC) CLUTCH SOLENOIDS (Continued)

TEST CONDITIONS	TEST DETAILS/RESULTS/ACTIONS
A6 ELECTRICAL SIGNAL CHECK	
1 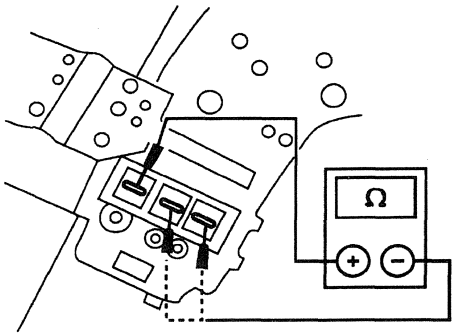 AD1389-A 2 Trans-Bench Mode	1 Leave positive lead connected to VPWR solenoid terminal and connect negative lead to the signal terminal of the appropriate solenoid. 3 Select Parameter SSA/SS1, SSB/SS2 or TCC. 4 Select "ON". 5 Press "SEND". 6 Turn the solenoids ON and OFF, while monitoring the voltage reading on the DVOM, solenoid state on the NGS (ON and OFF), listen for the solenoid to activate (click).

Official Licensed Product
Ford Motor Company

(Continued)

DIAGNOSIS AND TESTING (Continued)

PINPOINT TEST A: SHIFT AND TORQUE CONVERTER (TCC) CLUTCH SOLENOIDS (Continued)

TEST CONDITIONS	TEST DETAILS/RESULTS/ACTIONS
A6 ELECTRICAL SIGNAL CHECK (Continued)	
7 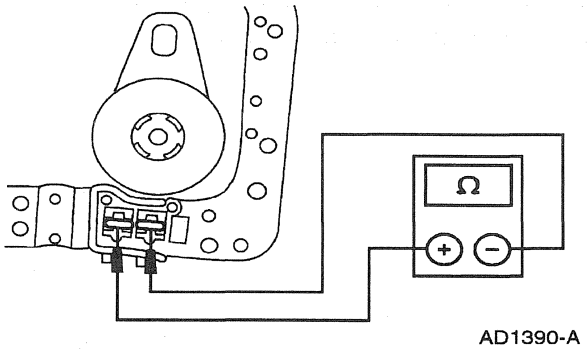 AD1390-A	7 Connect the positive lead to VPWR terminal and the negative lead to the TCC terminal.
8 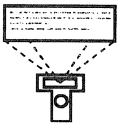	8 Select Parameter TCC.
	9 Select "ON".
	10 Press "SEND".
	11 Turn the solenoid ON and OFF, while monitoring the voltage reading on the DVOM, solid state on the NGS (ON and OFF). Listen for the solenoid to activate (click).
	12 Select "OFF", press "SEND". • Does the voltage and solenoid state change? → **Yes** GO to **A7**. → **No** CHECK for open or short circuit in harness, solenoid or a PCM concern.
A7 CHECK SOLENOID RESISTANCE AT SOLENOID	
	1 Disconnect the appropriate solenoid from the lead frame.

(Continued)

Official Licensed Product
Ford Motor Company®

DIAGNOSIS AND TESTING (Continued)

PINPOINT TEST A: SHIFT AND TORQUE CONVERTER (TCC) CLUTCH SOLENOIDS (Continued)

TEST CONDITIONS	TEST DETAILS/RESULTS/ACTIONS
A7 CHECK SOLENOID RESISTANCE AT SOLENOID (Continued)	
2 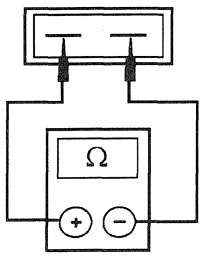 GD3386-A 3 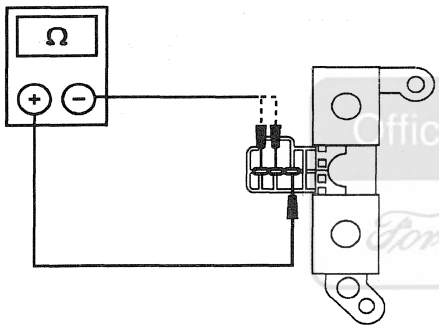 AD1391-A	2 Check solenoid resistance by connecting an ohmmeter at the terminals of the solenoid.

Official Licensed Product
Ford Motor Company

(Continued)

DIAGNOSIS AND TESTING (Continued)

PINPOINT TEST A: SHIFT AND TORQUE CONVERTER (TCC) CLUTCH SOLENOIDS (Continued)

TEST CONDITIONS	TEST DETAILS/RESULTS/ACTIONS
A7 CHECK SOLENOID RESISTANCE AT SOLENOID (Continued)	
4 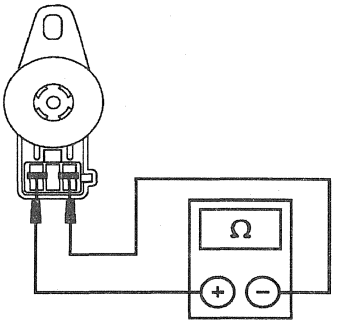 AD1392-A	5 Measure and record the resistance for each solenoid (SSA/SS1, SSB/SS2 or TCC). **Solenoid** / **Resistance (ohms)** SSA/SS1 — 20-30 SSB/SS2 — 20-30 TCC — 10-16 • Is the resistance within specification? → **Yes** GO to **A8**. → **No** REPLACE the solenoid.
A8 CHECK SOLENOID FOR SHORT TO GROUND	
1 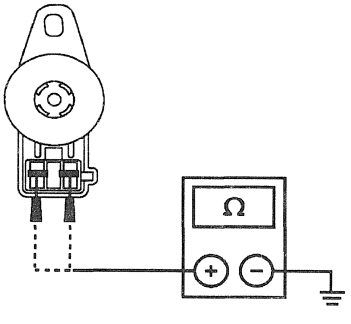 AD1393-A	1 Check for continuity between engine ground and appropriate solenoid terminal with ohmmeter or other low current tester (less than 200 milliamps). Connection should show infinite resistance (no continuity). **Solenoid** / **Terminal** SSA/SS1 — +/- SSB/SS2 — +/- TCC — +/-

Official Licensed Product
Ford Motor Company

(Continued)

DIAGNOSIS AND TESTING (Continued)

PINPOINT TEST A: SHIFT AND TORQUE CONVERTER (TCC) CLUTCH SOLENOIDS (Continued)

TEST CONDITIONS	TEST DETAILS/RESULTS/ACTIONS
A8 CHECK SOLENOID FOR SHORT TO GROUND (Continued)	
2 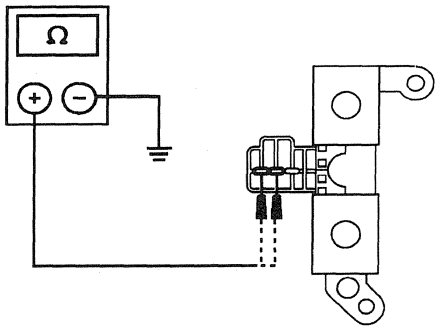 AD1394-A	• Is there continuity? → **Yes** REPLACE the solenoid. → **No** REFER to Diagnosis by Symptom for diagnosis of shift or torque converter concerns.

Official Licensed Pr... Ford Motor Company

PINPOINT TEST B: TRANSMISSION FLUID TEMPERATURE (TFT) SENSOR

NOTE: Refer to the Transmission Internal Harness Illustration preceding these pinpoint tests.

TEST CONDITIONS	TEST DETAILS/RESULTS/ACTIONS
B1 ELECTRONIC DIAGNOSTICS	
2 3 New Generation STAR (NGS) Tester	1 Check to make sure the transmission harness connector is fully seated, terminals are fully engaged in connector and in good condition before proceeding. 4 Select Diagnostic Data Link. 5 Select PCM. 6 Select PID/Data Monitor and Record.

(Continued)

DIAGNOSIS AND TESTING (Continued)

PINPOINT TEST B: TRANSMISSION FLUID TEMPERATURE (TFT) SENSOR (Continued)

TEST CONDITIONS	TEST DETAILS/RESULTS/ACTIONS
B1 ELECTRONIC DIAGNOSTICS (Continued)	
[7] PIDs; TFT, TFTV	• Does the vehicle enter PID/Data Monitor and Record? → **Yes** REMAIN in PID/Data Control. GO to **B2**. → **No** REPEAT procedure to enter PID. If vehicle did not enter PID, REFER to the Powertrain Control/Emissions Diagnosis Manual [8] for diagnosis of PCM and NGS.
B2 WARM-UP/COOL-DOWN CYCLE	
	[1] While monitoring the TFT PIDs, perform the following test: If transmission is cold, run transmission to warm it up. If transmission is warm, allow transmission to cool down. • Do the TFT PIDs increase as the transmission is warmed up or decrease as the transmission is cooled or does the TFT or TFTV drop in and out of range? → **Yes** If the TFT PIDs increase as the transmission is warmed or decrease as the transmission is cooled, CLEAR all DTCs. Road test to verify if concern is still present. If concern is still present, REFER to Diagnosis by Symptom to diagnose transmission overheating. If the TFT or TFTV drop in and out of range, INSPECT for intermittent concern in the internal/external harness, sensor or connector. → **No** GO to **B3**.
B3 ELECTRICAL SIGNAL CHECK	
	[1] Remove transmission fluid pan. [2] Visually inspect the lead frame and connectors for damage.

(Continued)

8 Can be purchased as a separate item.

DIAGNOSIS AND TESTING (Continued)

PINPOINT TEST B: TRANSMISSION FLUID TEMPERATURE (TFT) SENSOR (Continued)

TEST CONDITIONS	TEST DETAILS/RESULTS/ACTIONS
B3 ELECTRICAL SIGNAL CHECK (Continued)	
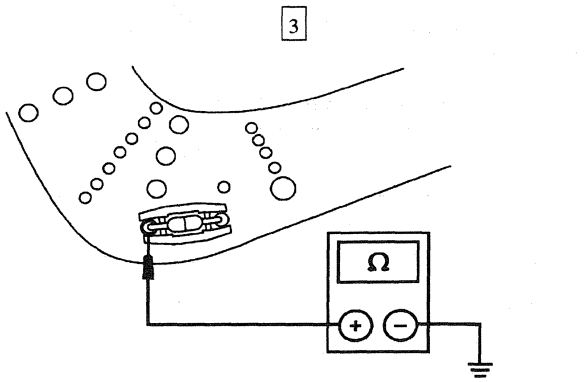 AD1395-A	3 Connect DVOM positive lead to +TFT at sensor terminal and negative lead to a good ground. • Is the voltage present? → **Yes** GO to **B4**. → **No** CHECK for open or short circuit in vehicle harness, internal harness or a PCM concern.
B4 CHECK RESISTANCE OF TFT SENSOR	
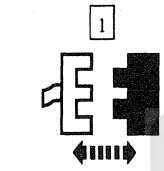 Transmission Harness 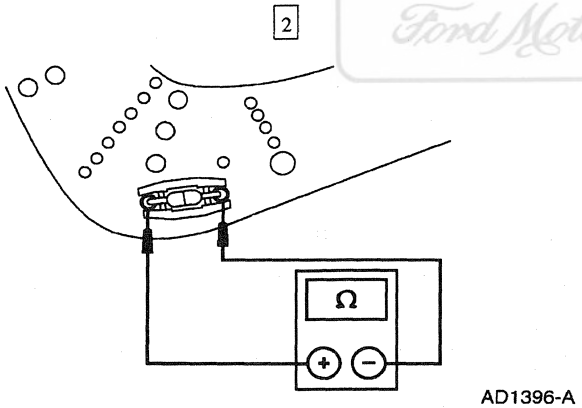 AD1396-A	2 Connect DVOM across +TFT and -TFT terminals at transmission connector. 3 Record the resistance.

(Continued)

Official Licensed Product Ford Motor Co.

DIAGNOSIS AND TESTING (Continued)

PINPOINT TEST B: TRANSMISSION FLUID TEMPERATURE (TFT) SENSOR (Continued)

TEST CONDITIONS	TEST DETAILS/RESULTS/ACTIONS
B4 CHECK RESISTANCE OF TFT SENSOR (Continued)	
	4 Resistance should be approximately in the following ranges:

Transmission Fluid Temperature

°C	°F	Resistance (Ohms)
-40 to -20	-40 to -4	967K - 284K
-19 to -1	-3 - 31	284K - 100K
0 - 20	32 - 68	100K - 37K
21 - 40	69 - 104	37K - 16K
41 - 70	105 - 158	16K - 5K
71 - 90	159 - 194	5K - 2.7K
91 - 110	195 - 230	2.7K - 1.5K
111 - 130	231 - 266	1.5K - 0.8K
131 - 150	267 - 302	0.8K - 0.54K

- Is the resistance in the range?

→ **Yes**
REFER to Diagnosis by Symptom Index to diagnose an overheating concern.

→ **No**
REPLACE internal harness (sensor is part of harness).

Official Licensed Product
Ford Motor Company

Pinpoint Test C

Does not apply.

PINPOINT TEST D: DIGITAL TRANSMISSION RANGE (TR) SENSOR

NOTE: Refer to the Digital Transmission Range (TR) Sensor Connector Illustration preceding these pinpoint tests.

TEST CONDITIONS	TEST DETAILS/RESULTS/ACTIONS
D1 VERIFY DIGITAL TRANSMISSION RANGE SENSOR ALIGNMENT	
1 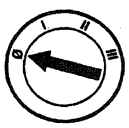 2	3 Check to make sure the digital TR sensor harness connector is fully seated, terminals are fully engaged in connector and in good condition before proceeding.

(Continued)

DIAGNOSIS AND TESTING (Continued)

PINPOINT TEST D: DIGITAL TRANSMISSION RANGE (TR) SENSOR (Continued)

TEST CONDITIONS	TEST DETAILS/RESULTS/ACTIONS
D1 VERIFY DIGITAL TRANSMISSION RANGE SENSOR ALIGNMENT (Continued)	
	4 Apply the parking brake.
5 	
	6 Verify the shift linkage is adjusted in the OVERDRIVE (O/D) position.
7 	
	8 Verify that the digital TR Sensor Alignment Tool fits in the appropriate slots. • Is the digital TR sensor properly adjusted? → **Yes** GO to **D2**. → **No** ADJUST the digital TR sensor; refer to Digital Transmission Range (TR) Sensor—Adjustment procedure in this section.

Official Licensed Ford Motor Company

(Continued)

DIAGNOSIS AND TESTING (Continued)

PINPOINT TEST D: DIGITAL TRANSMISSION RANGE (TR) SENSOR (Continued)

TEST CONDITIONS	TEST DETAILS/RESULTS/ACTIONS
D2 CHECK ELECTRICAL SIGNAL OPERATION	
1 2 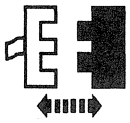 Digital TR Sensor	2 ⚠ **CAUTION: Do not pry on connector. This will damage the connector and result in a transmission concern.** Press button and pull out on the digital TR harness connector. 3 Inspect both ends of the connector for damage or pushed out pins, corrosion, loose wires and missing or damaged seals. • Is there damage to the connector, pins or harness? → **Yes** REPAIR as required. CLEAR DTCs and RERUN OBD Tests. → **No** If diagnosing a DTC, GO to **D3**. If diagnosing a starting concern, a backup lamp concern, GO to **D8**.
D3 CHECK ELECTRICAL SYSTEM OPERATION (DTR AND PCM)	
1 2 3 4 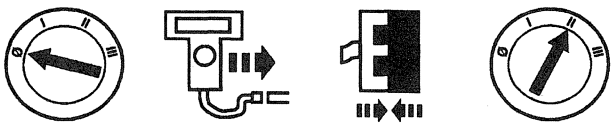 New Generation Star (NGS) Tester Digital TR Sensor 5 TR PIDS TR, TR__D	6 Move transmission range selector lever into each gear and stop. 7 Observe the PIDs, TR and TR__D, while wiggling harness and tapping on sensor.

(Continued)

Official Licensed Product

DIAGNOSIS AND TESTING (Continued)

PINPOINT TEST D: DIGITAL TRANSMISSION RANGE (TR) SENSOR (Continued)

TEST CONDITIONS	TEST DETAILS/RESULTS/ACTIONS
D3 CHECK ELECTRICAL SYSTEM OPERATION (DTR AND PCM) (Continued)	
	8 Compare the PIDs to the chart below:

Selector Position	TR	TR__D
Park	P/N	0000
Reverse	REV	1100
Neutral	NTRL	0110
Drive	O/D*	1111
Man 2	MAN2	1001
Man 1	MAN1	0011

* Will read "DRIVE" if O/D cancel switch is "ON."

- Do the PIDs TR and TR__D match the above chart, and does the TR__D PID remain steady when the harness is wiggled or when the sensor is tapped upon?

→ **Yes**
The problem is not in the digital TR sensor system. REFER to Diagnosis by Symptom for further diagnosis.

→ **No**
If TR__D changes when wiggling harness or tapping on the sensor, problem may be intermittent.

GO to **D4**.

Official Licensed Product
Ford Motor Company

D4 CHECK DIGITAL TRANSMISSION RANGE SENSOR OPERATION	
1 Digital TR Sensor 2 TR-E Cable to Transmission Tester 3 TR-E Cable to Digital TR Sensor	4 Place the DIGITAL TR Overlay onto Transmission Tester.

(Continued)

DIAGNOSIS AND TESTING (Continued)

PINPOINT TEST D: DIGITAL TRANSMISSION RANGE (TR) SENSOR (Continued)

TEST CONDITIONS	TEST DETAILS/RESULTS/ACTIONS
D4 CHECK DIGITAL TRANSMISSION RANGE SENSOR OPERATION (Continued)	
	5 Perform SENSOR Test as instructed on the digital TR Overlay. • Does the status lamp on the tester TRS-E cable match the selected gear positions? → **Yes** Concern is not in the digital TR sensor, GO to **D5**. → **No** REPLACE the digital TR sensor and ADJUST; refer to Digital Transmission Range (TR) Sensor—Adjustment in this section. CLEAR DTCs and RERUN OBD Tests.
D5 CHECK PCM HARNESS CIRCUITS FOR OPENS	
1 2 Powertrain Control Module (PCM) 3 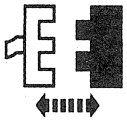 Digital TR Sensor 4 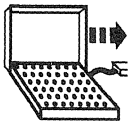 104-Pin Breakout Box	2 Inspect for damaged or pushed out pins, corrosion or loose wires. 3 ⚠ **CAUTION: Do not pry the connector. This will damage the connector and result in a transmission concern.** Disconnect the digital TR sensor connector.

Official Licensed Product Ford Motor Company

(Continued)

DIAGNOSIS AND TESTING (Continued)

PINPOINT TEST D: DIGITAL TRANSMISSION RANGE (TR) SENSOR (Continued)

TEST CONDITIONS	TEST DETAILS/RESULTS/ACTIONS
D5 CHECK PCM HARNESS CIRCUITS FOR OPENS (Continued)	
5 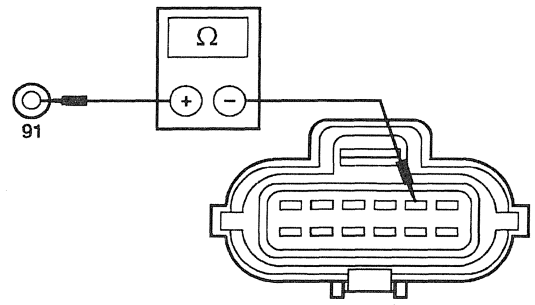 GD2142-A	5 Measure the resistance between the PCM test pin 91 at the 104-Pin Breakout Box and signal return circuit pin at vehicle harness connector pin 2.
6 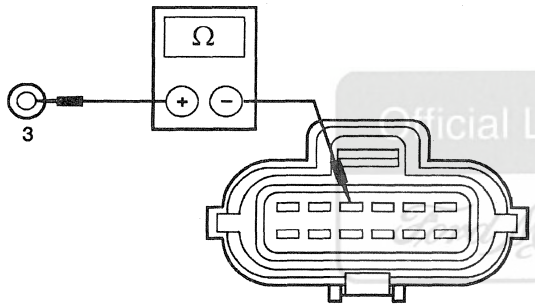 GD2143-B	6 Measure the resistance between the PCM test pin 3 at the 104-Pin Breakout Box and TR1 circuit pin at vehicle harness connector pin 4.
7 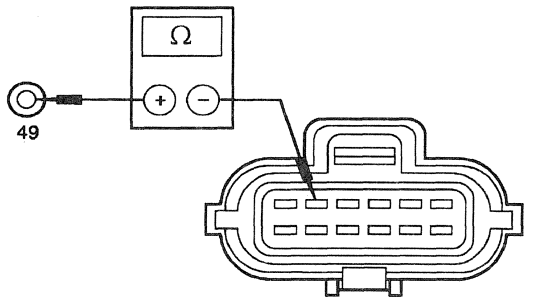 GD2144-A	7 Measure the resistance between the PCM test pin 49 at the 104-Pin Breakout Box and TR2 circuit pin at vehicle harness connector pin 5.

Official Licensed Product Ford Motor Company

(Continued)

DIAGNOSIS AND TESTING (Continued)

PINPOINT TEST D: DIGITAL TRANSMISSION RANGE (TR) SENSOR (Continued)

TEST CONDITIONS	TEST DETAILS/RESULTS/ACTIONS
D5 CHECK PCM HARNESS CIRCUITS FOR OPENS (Continued)	
8 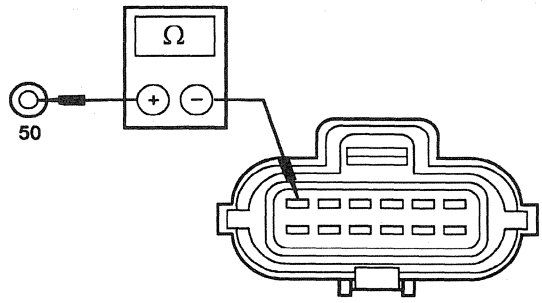 GD2145-A	8 Measure the resistance between the PCM test pin 50 at the 104-Pin Breakout Box and TR4 circuit pin at vehicle harness connector pin 6.
9 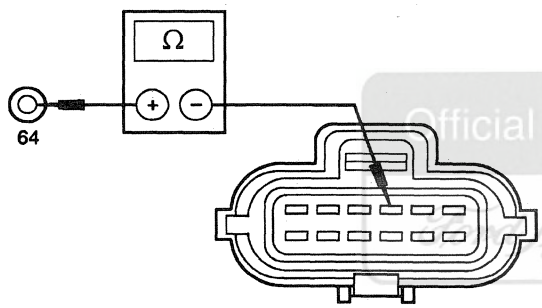 GD2146-A	9 Measure the resistance between the PCM test pin 64 at the 104-Pin Breakout Box and TR3A circuit pin at vehicle harness connector pin 3. • Are all resistances less than 5 ohms? → **Yes** GO to **D6**. → **No** REPAIR open circuit(s). RECONNECT all components. CLEAR DTCs. RERUN OBD Tests.
D6 CHECK PCM HARNESS CIRCUITS FOR SHORT TO GROUND OR POWER	
1 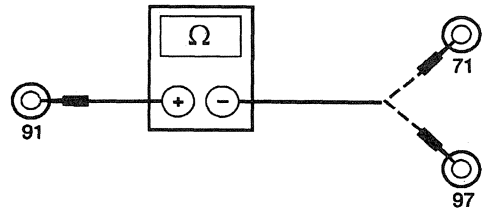 GD2254-A	1 Measure the resistance between PCM test pin 91 and test pins 71 and 97 at the 104-Pin Breakout Box.

(Continued)

Official Licensed Product

DIAGNOSIS AND TESTING (Continued)

PINPOINT TEST D: DIGITAL TRANSMISSION RANGE (TR) SENSOR (Continued)

TEST CONDITIONS	TEST DETAILS/RESULTS/ACTIONS
D6 CHECK PCM HARNESS CIRCUITS FOR SHORT TO GROUND OR POWER (Continued)	
2 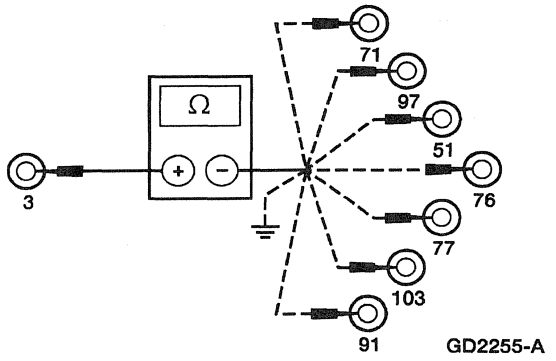 GD2255-A	2 Measure the resistance between PCM test pin 3 and test pins 71, 97, 51, 76, 77, 103, and 91 at the 104-Pin Breakout Box and ground.
3 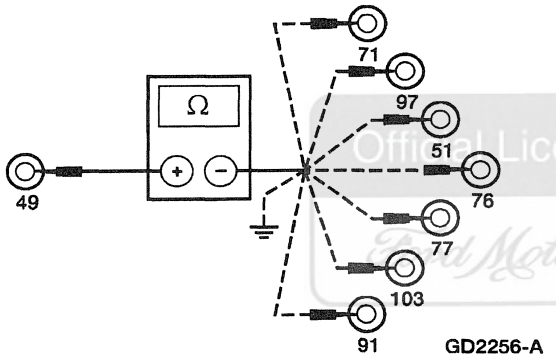 GD2256-A	3 Measure the resistance between PCM test pin 49 and test pins 71, 97, 51, 76, 77, 103, and 91 at the 104-Pin Breakout Box and ground.
4 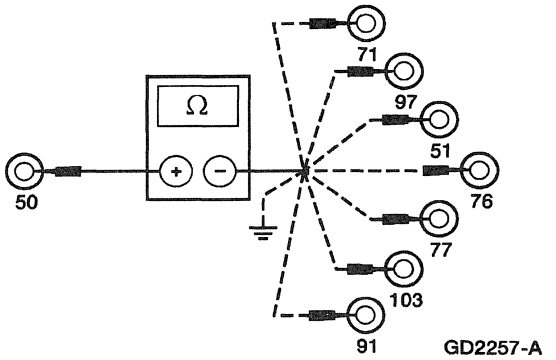 GD2257-A	4 Measure the resistance between PCM test pin 50 and test pins 71, 97, 51, 76, 77, 103, and 91 at the 104-Pin Breakout Box and ground.

Official Licensed Product
Ford Motor Company

(Continued)

DIAGNOSIS AND TESTING (Continued)

PINPOINT TEST D: DIGITAL TRANSMISSION RANGE (TR) SENSOR (Continued)

TEST CONDITIONS	TEST DETAILS/RESULTS/ACTIONS
D6 CHECK PCM HARNESS CIRCUITS FOR SHORT TO GROUND OR POWER (Continued)	
5 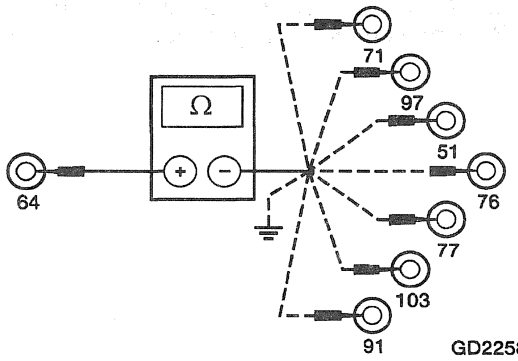 GD2258-A	5 Measure the resistance between PCM test pin 64 and test pins 71, 97, 51, 76, 77, 103, and 91 at the 104-Pin Breakout Box and ground. • Are all resistances greater than 10,000 ohms? → **Yes** GO to **D7**. → **No** REPAIR short circuit(s). RECONNECT all components. CLEAR DTCs. RERUN OBD Tests.
D7 CHECK FOR SHORT BETWEEN TR/PCM INPUT SIGNAL CIRCUITS	
1 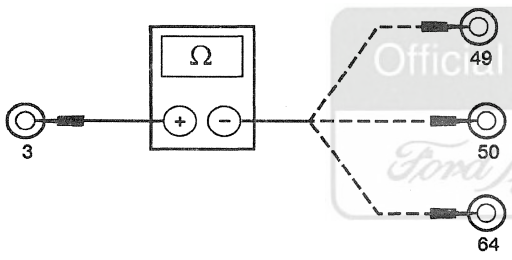 GD2259-A	1 Measure the resistance between test pin 3 and pins 49, 50, and 64 at the 104-Pin Breakout Box.
2 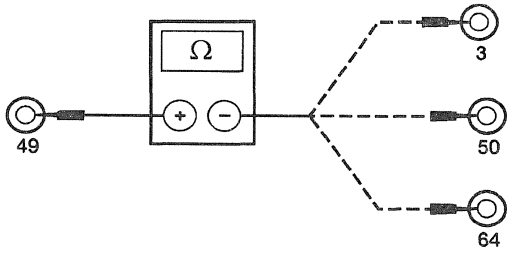 GD2260-A	2 Measure the resistance between test pin 49 and pins 3, 50, and 64 at the 104-Pin Breakout Box.

Official Licensed Product
Ford Motor Company

(Continued)

DIAGNOSIS AND TESTING (Continued)

PINPOINT TEST D: DIGITAL TRANSMISSION RANGE (TR) SENSOR (Continued)

TEST CONDITIONS	TEST DETAILS/RESULTS/ACTIONS
D7 CHECK FOR SHORT BETWEEN TR/PCM INPUT SIGNAL CIRCUITS (Continued)	
3 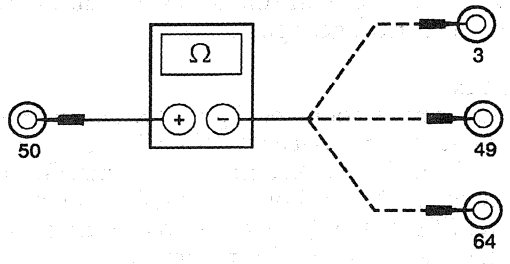 GD2261-A	3 Measure the resistance between test pin 50 and pins 3, 49, and 64 at the 104-Pin Breakout Box.
4 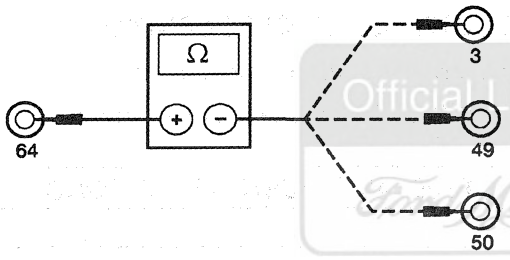 GD2262-A	4 Measure the resistance between test pin 64 and pins 3, 49, and 50 at the 104-Pin Breakout Box. • Are all the resistances greater than 10,000 ohms? → **Yes** REPLACE the PCM. RECONNECT all components. CLEAR DTCs and RERUN OBD Tests. → **No** REPAIR shorts on circuits having less than 10,000 ohms between other TR/PCM input signal circuits. RECONNECT all components. CLEAR DTCs and RERUN OBD Tests.
D8 CHECK THE NON-PCM INTERNAL CIRCUITS OF SENSOR	
1 TRS-E Cable to Transmission 2 TRS-E Cable to Digital TR Sensor	3 Place the DIGITAL TR Overlay onto Transmission Tester.

(Continued)

Official Licensed Product Ford Motor Company

DIAGNOSIS AND TESTING (Continued)

PINPOINT TEST D: DIGITAL TRANSMISSION RANGE (TR) SENSOR (Continued)

TEST CONDITIONS	TEST DETAILS/RESULTS/ACTIONS
D8 CHECK THE NON-PCM INTERNAL CIRCUITS OF SENSOR (Continued)	
	4 Perform SWITCH Test as instructed on the digital TR Overlay. • Does the status lamp on the tester indicate RED for the correct gear position? → **Yes** Concern is not in the digital TR sensor. For Start System concerns, REFER to Section 303-06. For Backup Lamp concerns, GO to Section 417-01. For Optional Circuits; REFER to the Powertrain Control/Emissions Diagnosis Manual [9] for diagnosis. → **No** REPLACE the digital TR sensor and ADJUST; refer to Digital Transmission Range (TR) Sensor—Adjustment in this section. Clear DTCs and RERUN OBD Tests.

PINPOINT TEST E: ELECTRICAL PRESSURE CONTROL (EPC) SOLENOID

NOTE: Refer to the Transmission Internal Harness Illustration preceding these pinpoint tests.

NOTE: Read and record all DTCs. All digital TR Sensor and VSS DTCs must be repaired before entering Output State Control (OSC).

TEST CONDITIONS	TEST DETAILS/RESULTS/ACTIONS
E1 ELECTRONIC DIAGNOSTICS	
1 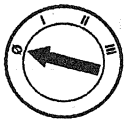 2 4 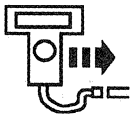 New Generation STAR (NGS) Tester 5 6 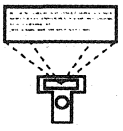 Diagnostic Data Link 7 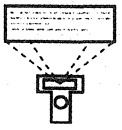 PCM	3 Check to make sure the transmission harness connector is fully seated, terminals are fully engaged in the connector and in good condition before proceeding.

(Continued)

9 Can be purchased as a separate item.

DIAGNOSIS AND TESTING (Continued)

PINPOINT TEST E: ELECTRICAL PRESSURE CONTROL (EPC) SOLENOID (Continued)

TEST CONDITIONS	TEST DETAILS/RESULTS/ACTIONS
E1 ELECTRONIC DIAGNOSTICS (Continued)	
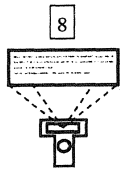 Active Command Modes 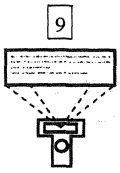 Output State Control (OSC) 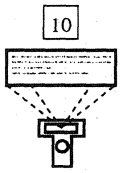 Trans-Bench Mode	• Does the vehicle enter the Trans-Bench Mode? → **Yes** REMAIN in Trans-Bench Mode. GO to **E2**. → **No** REPEAT procedure to ENTER Trans-Bench Mode. If vehicle did not enter OSC, REFER to the Powertrain Control/Emissions Diagnosis Manual [10] for diagnosis of PCM or NGS.
E2 SOLENOID FUNCTIONAL TEST	
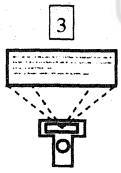 Parameter; EPC 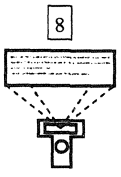 XXX	1 Install 300 psi pressure gauge into EPC tap. 2 Monitor pressure gauge. 4 Select value - 15, 30, 45, 60, 70 or 90 PSI. 5 Press "SEND". 6 Select another value "0-90 psi". 7 Press "SEND".

Official Licensed Product Ford Motor Company

(Continued)

10 Can be purchased as a separate item.

DIAGNOSIS AND TESTING (Continued)

PINPOINT TEST E: ELECTRICAL PRESSURE CONTROL (EPC) SOLENOID (Continued)

TEST CONDITIONS	TEST DETAILS/RESULTS/ACTIONS
E2 SOLENOID FUNCTIONAL TEST (Continued)	
	9 Press "SEND". • Does the pressure reading match the commanded pressure? → **Yes** CLEAR DTCs. → **No** GO to **E3**.
E3 CHECK FOR BATTERY VOLTAGE	
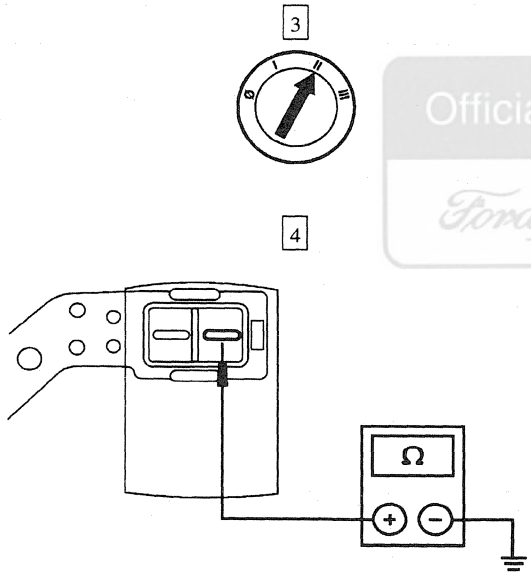 AD1397-A	1 Remove transmission fluid pan. 2 Visually inspect the lead frame connectors for damage. 4 Connect DVOM positive lead to VPWR solenoid terminal and negative lead to a good ground. • Is the battery voltage present? → **Yes** GO to **E4**. → **No** CHECK for open or short circuit in harness.

Official Licensed Product
Ford Motor Company

(Continued)

DIAGNOSIS AND TESTING (Continued)

PINPOINT TEST E: ELECTRICAL PRESSURE CONTROL (EPC) SOLENOID (Continued)

TEST CONDITIONS	TEST DETAILS/RESULTS/ACTIONS
E4 ELECTRICAL SIGNAL CHECK	
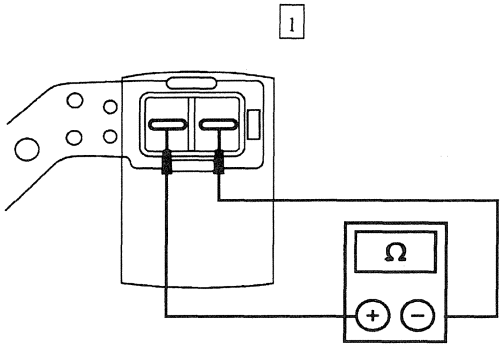 AD1398-A	1 Leave positive lead connected to VPWR solenoid terminal and connect negative lead to the signal terminal of the EPC solenoid.
	2 Turn the solenoids ON and OFF, while monitoring the voltage reading on the DVOM, solenoid state on the NGS (ON and OFF), listen for the solenoid to activate (click).
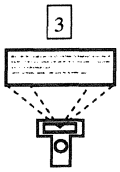 Trans-Bench Mode 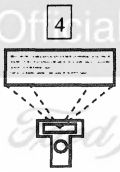 Parameter; EPC	
	5 Select a value ''0-90 psi''.
	6 Press ''SEND''.
	7 Select another value ''0-90 psi''.
	8 Press ''SEND''.
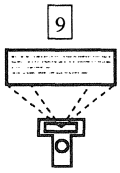 XXX	

Official Licensed Product Ford Motor Company

(Continued)

DIAGNOSIS AND TESTING (Continued)

PINPOINT TEST E: ELECTRICAL PRESSURE CONTROL (EPC) SOLENOID (Continued)

TEST CONDITIONS	TEST DETAILS/RESULTS/ACTIONS
E4 ELECTRICAL SIGNAL CHECK (Continued)	
	10 Press "SEND". • Does the voltage and solenoid state change? → **Yes** GO to **E5**. → **No** CHECK for open or short circuit in harness or PCM.
E5 CHECK SOLENOID RESISTANCE AT SOLENOID	
1 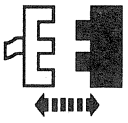 Transmission Harness 2 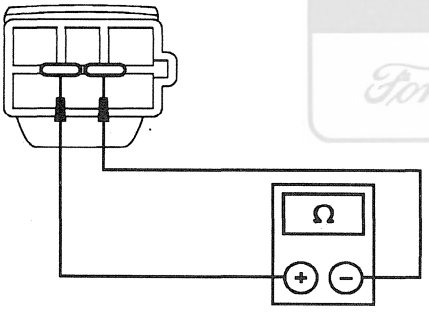 AD1399-A	2 Check solenoid resistance by connecting an ohmmeter at the terminals of the solenoid. 3 Measure and record the resistance of the EPC solenoid. Resistance should be between 2.48-5.66 ohms. • Is the resistance within specifications? → **Yes** GO to **E6**. → **No** REPLACE the solenoid.

Official License
Ford Motor Company

(Continued)

DIAGNOSIS AND TESTING (Continued)

PINPOINT TEST E: ELECTRICAL PRESSURE CONTROL (EPC) SOLENOID (Continued)

TEST CONDITIONS	TEST DETAILS/RESULTS/ACTIONS
E6 CHECK SOLENOID FOR SHORT TO GROUND	
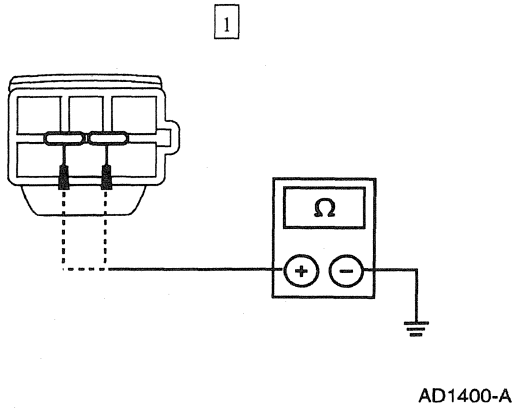 AD1400-A	1 Check for continuity between engine GROUND and the EPC solenoid terminals with ohmmeter or other low current tester (less than 200 milliamps). Connection should show infinite resistance (no continuity). Solenoid: EPC — Terminal: +/- • Is there continuity? → **Yes** REPLACE the solenoid. → **No** REFER to Diagnosis by Symptom Index in this section for diagnosis of pressure concerns.

Official Licensed Publication

PINPOINT TEST F: OUTPUT SHAFT SPEED (OSS) SENSORS

NOTE: Refer to the Output Shaft Speed Sensor (OSS) Harness Connector Illustration preceding these pinpoint tests.

TEST CONDITIONS	TEST DETAILS/RESULTS/ACTIONS
F1 ELECTRONIC DIAGNOSTICS	
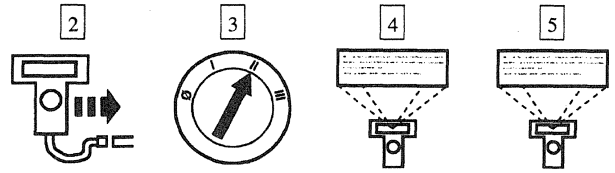 New Generation STAR (NGS) Tester; Diagnostic Data Link; PCM	1 Check to make sure the transmission harness connector is fully seated, terminals are fully engaged in connector and in good condition before proceeding. 6 Select PID/Data Monitor and Record.

(Continued)

DIAGNOSIS AND TESTING (Continued)

PINPOINT TEST F: OUTPUT SHAFT SPEED (OSS) SENSORS (Continued)

TEST CONDITIONS	TEST DETAILS/RESULTS/ACTIONS
F1 ELECTRONIC DIAGNOSTICS (Continued)	
	7 Select the following PID: OSS. • Does vehicle enter PID/Data Monitor and Record? → **Yes** REMAIN in PID/Data. GO to **F2**. → **No** REPEAT procedure to ENTER PID. If vehicle did not enter PID, REFER to the Powertrain Control/Emissions Diagnosis Manual [11] for diagnosis of PCM or NGS.
F2 DRIVE CYCLE TEST	
	1 While monitoring the appropriate sensor PID, drive the vehicle so that the transmission upshifts and downshifts through all gears. • Does the OSS Speed PID increase and decrease with engine and vehicle speed or is the sensor signal erratic (drop to zero or near zero and return to normal operation)? → **Yes** If the OSS Speed PID increase and decrease with engine and vehicle speed, CLEAR all DTCs. Road test to verify if concern is still present. If concern is still present, REFER to Diagnosis by Symptom Index for diagnosis. If the sensor signal is erratic, INSPECT for intermittent concern in the internal/external harness, sensor, or connector. → **No** If the OSS Speed PID does not increase and decrease with engine and vehicle speed, INSPECT for open or short in vehicle harness, sensor, a PCM concern, or internal hardware concern. If the sensor signal is steady, GO to **F3**.
F3 CHECK RESISTANCE OF OSS SENSOR	
	1 Disconnect the appropriate vehicle harness connector from the OSS sensor.

(Continued)

Official Licensed Ford Motor Company

11 Can be purchased as a separate item.

DIAGNOSIS AND TESTING (Continued)

PINPOINT TEST F: OUTPUT SHAFT SPEED (OSS) SENSORS (Continued)

TEST CONDITIONS	TEST DETAILS/RESULTS/ACTIONS
F3 CHECK RESISTANCE OF OSS SENSOR (Continued)	
2 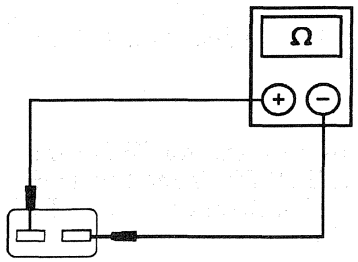 AD1084-B	2 Connect ohmmeter negative lead to one pin of the sensor and the positive lead to the other pin on the sensor. 3 Record the resistance. Resistance should be as follows: **Sensor** / **Resistance (ohms)**: OSS / 450-750 • Is the resistance within specification for the appropriate sensor? → **Yes** REFER to Diagnosis by Symptom Index for concern diagnosis. → **No** REPLACE OSS sensor.

Official Licensed Product
Ford Motor Company

Pinpoint Test G

Does not apply.

PINPOINT TEST H: SOLENOID MECHANICAL FAILURE

NOTE: Repair all other DTCs before repairing the following DTCs: P1714, P1715, P1740.

TEST CONDITIONS	TEST DETAILS/RESULTS/ACTIONS
H1 ELECTRONIC DIAGNOSIS	
1 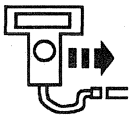 New Generation STAR (NGS) Tester	2 Perform KOEO test until continuous DTCs have been displayed.

(Continued)

DIAGNOSIS AND TESTING (Continued)

PINPOINT TEST H: SOLENOID MECHANICAL FAILURE (Continued)

TEST CONDITIONS	TEST DETAILS/RESULTS/ACTIONS
H1 ELECTRONIC DIAGNOSIS (Continued)	
	3 If any of the following DTCs are present, continue with this test: P1714, P1715, P1740. • Are other DTCs present for TFT or shift solenoids? → **Yes** REPAIR the DTCs for TFT or shift solenoids first. CLEAR DTCs and PERFORM transmission Drive Cycle Test. RERUN Quick Test. → **No** REPLACE the appropriate solenoid and/or body. REFER to the Diagnostic Trouble Code Chart for code description. GO to **H2**.
H2 TRANSMISSION DRIVE CYCLE TEST	
	1 Perform transmission drive cycle test. 2 Perform On-Board Diagnostic Test. • Does the vehicle upshift and downshift OK? → **Yes** GO to **H3**. → **No** REFER to Diagnosis by Symptom to diagnose shift concerns.
H3 RETRIEVE DTCS	
1 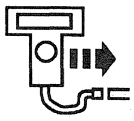 New Generation STAR (NGS) Tester	2 Perform KOEO test until continuous DTCs have been displayed. • Are DTCs P1714, P1715, P1740 still present? → **Yes** REPLACE PCM. Road test and RERUN Quick Test. → **No** Testing completed. If a concern still exists, REFER to the Diagnosis by Symptom Index for concern diagnosis.

Official Licensed Product
Ford Motor Company

DIAGNOSIS AND TESTING (Continued)

Special Testing Procedures

The special tests are designed to aid the technician in diagnosing the hydraulic and mechanical portion of the transmission.

Engine Idle Speed Check

Refer to the Powertrain Control/Emissions Diagnosis Manual [12] for diagnosis and testing of the engine idle speed.

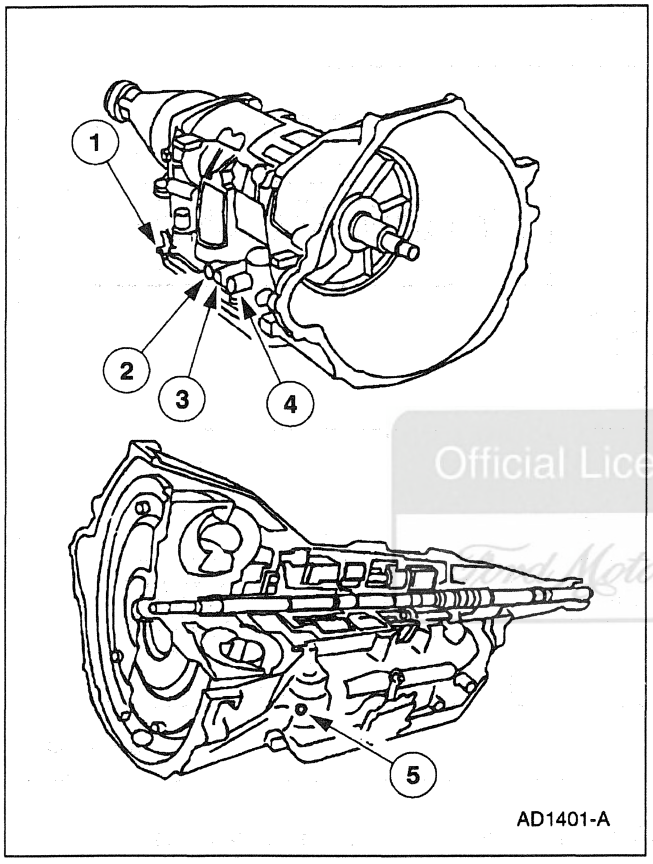

Item	Part Number	Description
1	—	Direct Clutch Pressure Tap
2	—	Forward Clutch Pressure Tap
3	—	Electronic Pressure Control (EPC) Pressure Tap
4	—	Intermediate Clutch Pressure Tap
5	—	Line Pressure Tap

(Continued)

Line Pressure Test

⚠ **CAUTION: Perform the line pressure test prior to performing the stall speed test. If the line pressure is low at stall, do not perform stall speed test or further transmission damage will occur. Do not maintain WOT in any transmission range for more than five seconds.**

This test verifies that the line pressure is within specification.

1. Connect pressure gauge to line pressure tap.
2. Start engine and check line pressures. Refer to the Line Pressure Chart to determine if line pressure is within specification.

Official Licensed Product
Ford Motor Company

Line Pressure Chart

Range	Idle		WOT Stall	
	EPC	Line Pressure	EPC	Line Pressure
P, N, OD, 2, 1	103-172 kPa (15-25 psi)	379-648 kPa (55-94 psi)	572-641 kPa (83-93 psi)	1103-1448 kPa (160-210 psi)
R	0-62 kPa (0-7 psi)	372-662 kPa (54-92 psi)	572-641 kPa (83-93 psi)	1427-1841 kPa (207-267 psi)

12 Can be purchased as a separate item.

DIAGNOSIS AND TESTING (Continued)

3. If line pressure is not within specification, check EPC pressure.
4. Connect pressure gauge to EPC pressure tap.
5. Restart engine and check EPC pressure. Refer to the Line Pressure Chart for specifications.
6. If EPC pressure is not within specification, perform Pinpoint Test E to diagnose EPC operation. If EPC operation is OK, refer to Line Pressure Diagnosis Chart for line pressure concern causes.

Line Pressure Diagnosis Chart

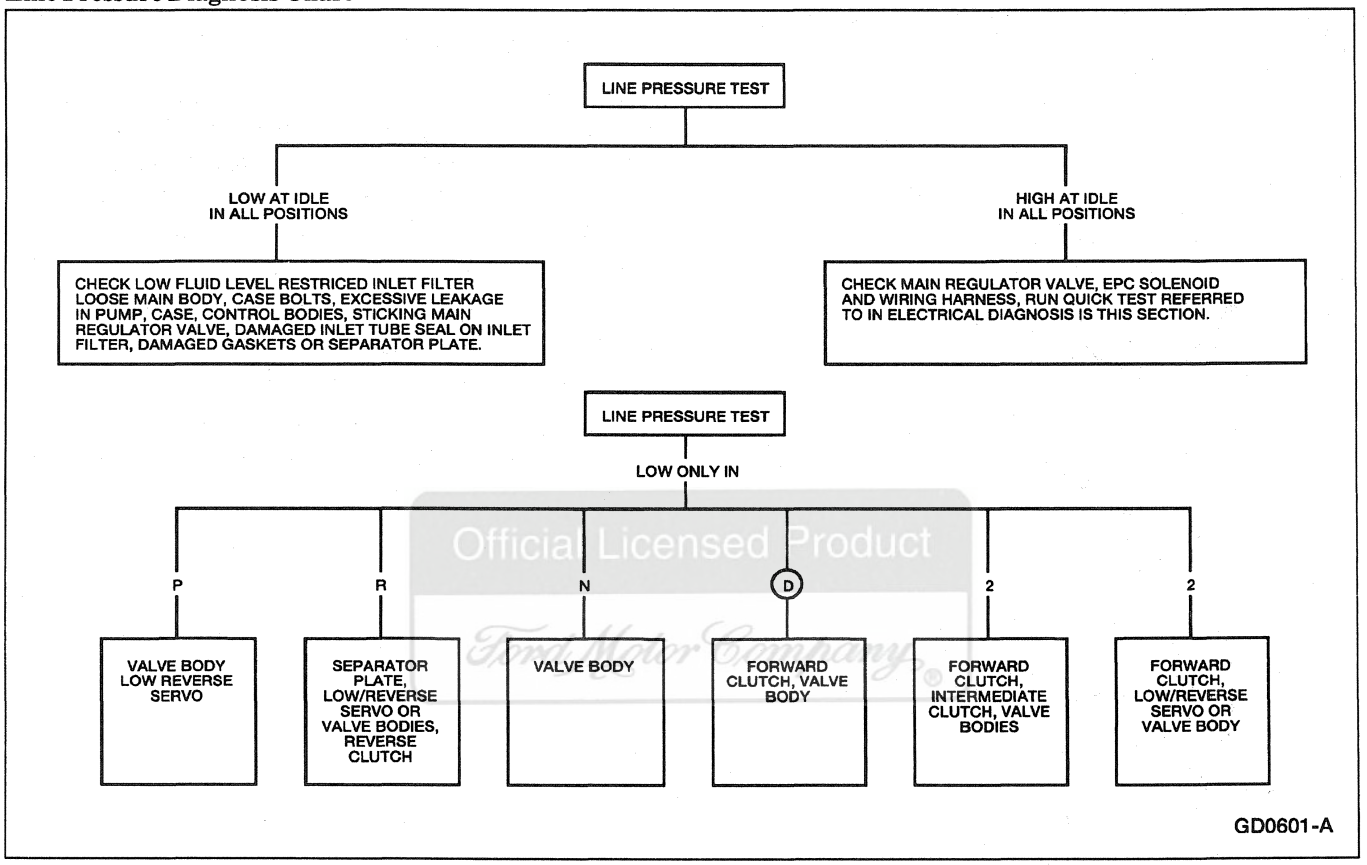

Official Licensed Product Ford Motor Company

Stall Speed Test

WARNING: APPLY THE PARKING BRAKE FIRMLY WHILE PERFORMING EACH STALL TEST.

CAUTION: Perform Line Pressure Test prior to performing Stall Test. If the line pressure is low at stall, do not perform Stall Test or further transmission damage will occur.

The stall speed test checks:

- torque converter clutch operation and installation.
- holding ability of the forward clutch.
- reverse clutch (the low-reverse bands).
- planetary one-way clutch.
- engine performance.

Conduct this test with the engine coolant and transmission fluid at proper levels and at normal operating temperature.

Apply the parking brake firmly for each stall speed test.

1. Find the specified stall rpm for the vehicle; refer to Stall Speed Diagnosis Chart. Use a grease pencil to mark the rpm on the dial of a tachometer.

Stall Speed Chart

Stall Speed RPM
2336-2718

2. Connect a tachometer to the engine.

DIAGNOSIS AND TESTING (Continued)

3. **NOTE:** If the rpm recorded by the tachometer exceeds the maximum limits, release the accelerator pedal immediately because clutch or band slippage is indicated.

   In each of the following ranges Ⓓ, 2, 1, R, press the accelerator pedal to the floor and hold it just long enough to let the engine get to wide open throttle (WOT). While making this test, do not hold the throttle open for more than 5 seconds at a time.

4. Note the results in each range.
5. After each range, move the shift control selector lever to Neutral and run the engine at 1000 rpm for about 15 seconds to cool the torque converter (7902) before making the next test.
6. Refer to the stall speed diagnosis chart for corrective actions.

Stall Speed Diagnosis Chart

Selector Position	Stall Speeds High	Stall Speeds Low
Ⓓ	Planetary One-Way Clutch	
Ⓓ, 2 and 1	Forward Clutch or Intermediate Clutch	
Ⓓ, 2, 1 and R	Perform Pressure Test	Torque Converter Stator One-Way Clutch or Engine Performance
R	Reverse Clutch or Low Reverse Band or Servo	

Air Pressure Tests

Transmission Air Test Plate

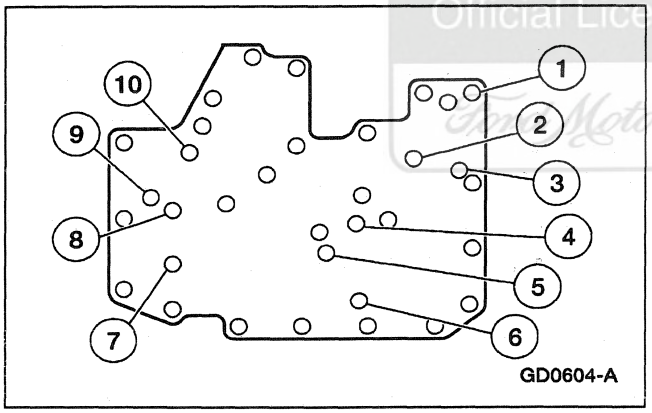

Item	Part Number	Description
1	—	Converter Bypass
2	—	1-2 Accumulator Apply
3	—	Intermediate Clutch
4	—	Overdrive Servo Release
5	—	Reverse Servo
6	—	Overdrive Servo Apply
7	—	2-3 Accumulator Bottom
8	—	2-3 Accumulator Top
9	—	Forward Clutch
10	—	Direct Clutch

A no-drive condition can exist even with correct transmission fluid pressure because of inoperative clutches or bands. An erratic shift can be located through a series of checks by substituting air pressure for fluid pressure to determine the location of the malfunction.

Follow the procedure to determine the location of the inoperative clutch or band by introducing air pressure into the various test plate passages.

NOTE: Use only dry, regulated (276 kPa [40 psi] maximum) air pressure.

Apply air to the appropriate passage(s). A dull thud should be felt or heard or movement could be observed when the clutch component applies. There should be no hissing sound when the component is applied.

Cover the vent hole in the test plate with a clean, lint-free shop towel to prevent spray when the air is applied. Plugging the vent hole during testing will result in inaccurate results.

1. Drain transmission fluid and remove the transmission fluid pan.
2. Remove the main control valve body.
3. Install Transmission Test Plate and gasket. Tighten bolts to 9-11 Nm (87-90 lb/in).

DIAGNOSIS AND TESTING (Continued)

4. **NOTE:** Do not apply air to the test plate vent hole.

   Apply air to the appropriate clutch port (refer to the Transmission Air Test Plate illustration). A dull thud may be heard or movement felt when the component is applied or released. If clutch seals or check balls are leaking a hissing sound may be heard.

If the servos do not operate, disassemble, clean and inspect them to locate the source of the concern.

If air pressure applied to the clutch passages fails to operate a clutch, or operates clutches simultaneously, inspect the fluid passages in the case.

If air pressure applied to the accumulator fails to operate an accumulator, remove and inspect case passages and piston.

Direct Clutch Pressure Test

The direct clutch pressure test will diagnose a low-pressure condition or leakage in the direct clutch circuit. A difference of 103 kPa (15 psi) or more between direct clutch pressure and line pressure (read at the forward clutch pressure tap) will prevent a normal 3-4 shift.

1. **CAUTION: Pressure gauges affect the shift quality of the transmission. Care should be taken not to accelerate or decelerate rapidly. Possible transmission failure could result.**

   Attach 0-2000 kPa (0-300 psi) pressure gauges to the forward clutch pressure tap and to the direct clutch pressure tap. Gauges must be accurate enough to distinguish a 103 kPa (15 psi) difference. (If this test is done in conjunction with a control pressure test, pressure gauges will be attached to all pressure taps.) Have sufficient flexible hose available to read the gauges in the vehicle.
2. Drive the vehicle. When pressure is applied to the direct clutch, note the difference between the pressure read at the forward clutch pressure tap and the direct clutch pressure.
3. If the difference in pressures is less than 103 kPa (15 psi), the direct clutch circuit is OK.
4. If the difference is greater than 103 kPa (15 psi), there could be a leak in the direct clutch pressure circuit. If the difference does not exceed 103 kPa (15 psi), the gauges on the line pressure and direct clutch pressure can be switched to confirm that gauge calibration differences is not the cause.

Leakage Inspection

CAUTION: Do not try to stop the fluid leak by increasing the torque beyond specifications. This may cause damage to the case threads.

Check the vehicle speed sensor (VSS) and the speedometer cable connection at the transmission. Replace rubber seal if necessary.

Leakage at the transmission fluid pan to case gasket often can be stopped by tightening the attaching bolts to 13-15 Nm (115-132 lb/in). If necessary, replace the oil pan case gasket.

Check the fluid filler tube connection at the transmission case. If leakage is found here, install a new grommet.

Check fluid lines and fittings between the transmission and the cooler in the radiator tank for looseness, wear, or damage. If leakage cannot be stopped by tightening a fluid tube nut, replace the damaged parts. When fluid is found leaking between the case and cooler line fitting, check for missing or damaged O-ring, then tighten the fitting to maximum specification.

If the leak continues, replace cooler line fitting and tighten to specification. The same procedure should be followed for fluid leaks between the radiator cooler and the cooler line fittings in this section; refer to Section 307-02.

Check the engine coolant in the radiator. If transmission fluid is present in the coolant, the cooler in the radiator is probably leaking.

The cooler can be further checked for leaks by disconnecting the lines for the cooler fittings and applying no more than 345 kPa (50 psi) air pressure to the fittings. Remove the radiator cap to relieve the pressure buildup at the exterior of the oil cooler tank. If the cooler is leaking and/or will not hold pressure, replace the cooler.

If leakage is found at the transmission range selector lever, replace the seal.

If leakage is found at the transmission internal harness connector, replace O-ring.

Official Licensed Product

DIAGNOSIS AND TESTING (Continued)

4R70W External Sealing

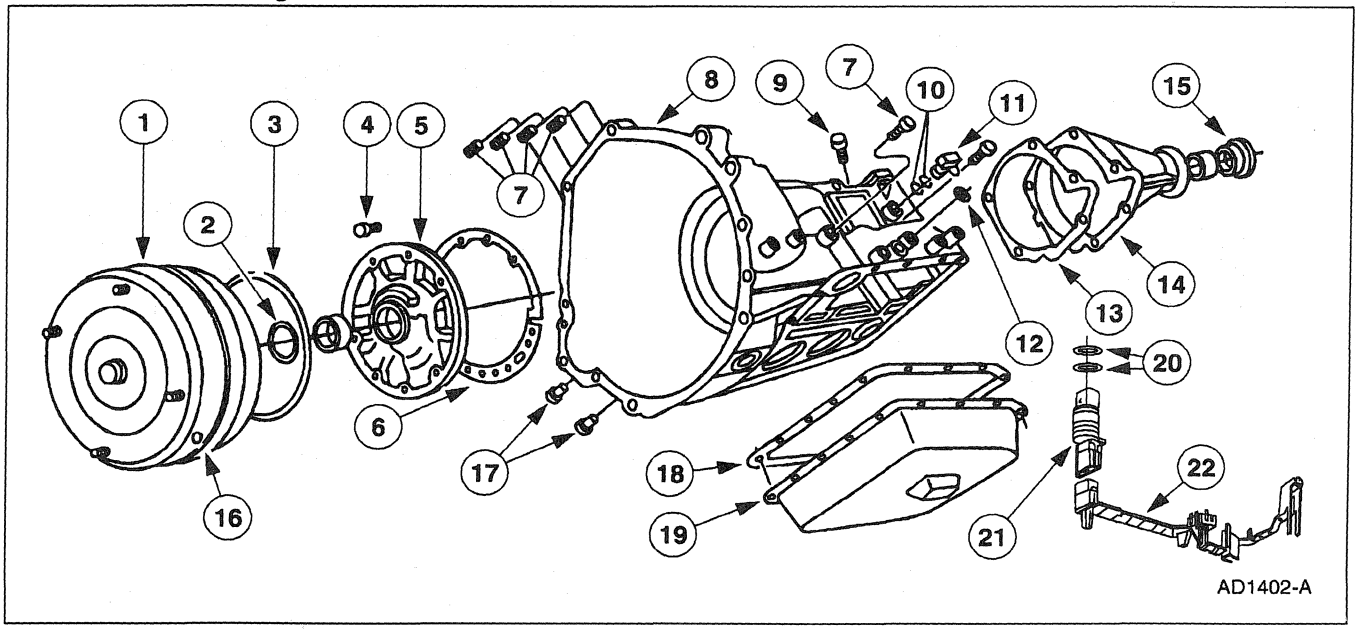

Item	Part Number	Description
1	7902	Torque Converter
2	7A248	Front Pump Seal
3	7A248	Front Pump Seal
4	N605789-S100	Bolt
5	7A106	Front Pump Body Assembly
6	7A136	Pump Gasket
7	390318-S100	Pipe Plug — 1/8 — 27 Dryseal Tapered
8	7005	Case
9	7034	Vent
10	7Z101	Turbine Speed Sensor Seal
11	7H103	Output Shaft Speed (OSS) Sensor
12	7B498	Manual Control Lever Seal Assembly

(Continued)

Item	Part Number	Description
13	7086	Extension Housing Gasket
14	7A039	Extension Housing
15	7052	Oil Seal
16	87650-S2	Plug — Converter Drain — 1/8 — 27 Dryseal
17	7D273	Oil Tube Connector
18	7A191	Pan to Case Gasket (Reuseable)
19	7A194	Transmission Fluid Pan
20	7Z276	O-Ring Seal
21	7G276	Bulkhead Assembly Wiring Connector
22	7G276	Bulkhead Assembly Wiring Connector, Molded

Ford Motor Company Official Licensed Parts

DIAGNOSIS AND TESTING (Continued)

Fluid Leakage in Torque Converter Area

In diagnosing and correcting fluid leaks in the front pump support and gear (7A103) and torque converter area, use the following procedures to locate the exact cause of the leakage. Leakage at the front of transmission, as evidenced by fluid around the torque converter housing, may have several sources. By careful observation it is possible, in many instances, to pinpoint the source of leak before removing the transmission from the vehicle. The paths which the fluid takes to reach the bottom of the torque converter housing are shown in the illustration. The five steps following correspond with the numbers in the illustration.

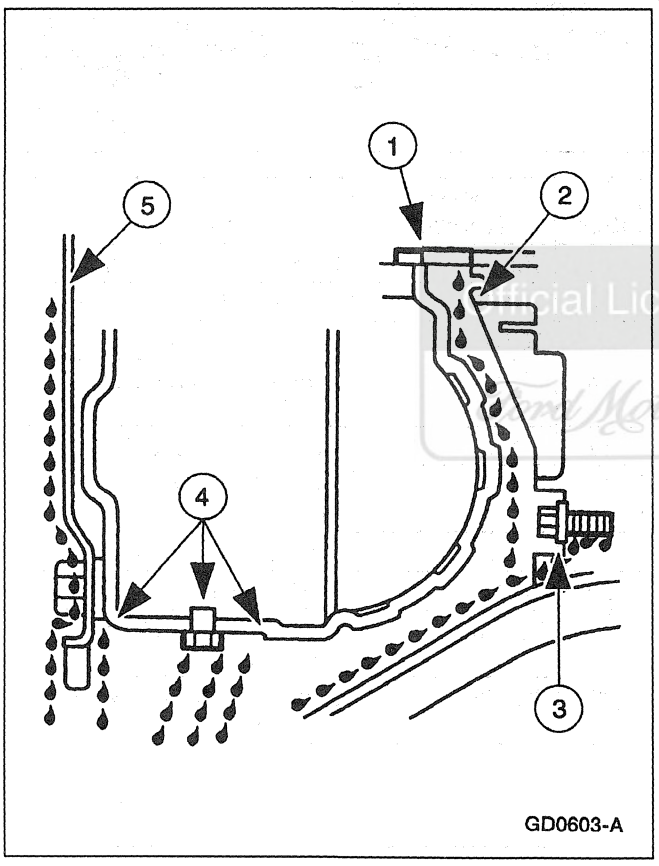

1. Fluid leaking by the front pump seal lip will tend to move along the impeller hub and onto the back of the impeller housing. Except in the case of a total seal failure, fluid leakage by the lip of the seal will be deposited on the inside of the torque converter housing only, near the outside diameter of the housing.
2. Fluid leakage by the outside diameter of the front pump seal and front pump body will follow the same path that leaks by the inside diameter of the front pump seal follow.
3. Fluid that leaks by a front pump to case bolt or pump gasket will be deposited on the inside of the torque converter housing only. Fluid will not be deposited on the back of the torque converter .
4. Fluid leakage from the converter drain plug, (model dependent) converter seal weld or converter to flywheel stud weld will appear at the outside diameter of the torque converter on the back face of the flywheel (6375) , and in the converter housing only near the flywheel . Fluid leaks from the torque converter will leave a ring of fluid around the inside of the torque converter housing.
5. **NOTE:** White facial tissue paper may aid in determining the color (red is transmission fluid) and source of the leaking fluid.

   Engine oil leaks are sometimes improperly diagnosed as transmission pump gasket leaks. The following areas of possible leakage should also be checked to determine if engine oil leakage is causing the concern.

   a. Leakage at the valve cover gasket (6584) may allow oil to flow over the torque converter housing or seep down between the torque converter housing and cylinder block (6010) causing oil to be present in or at the bottom of the torque converter housing.

   b. Oil galley plug leaks will allow oil to flow down the rear face of the cylinder block to the bottom of the torque converter housing.

   c. Leakage at the crankshaft rear oil seal (6701) will work back to the flywheel , and then into the torque converter housing.

   d. Leakage at oil pressure sensor (9278) .

Leak Check Test

Determine the cause of the leakage before repair.

1. Remove the fluid level indicator (7A020) and note the color of the fluid. Original factory fill fluid is dyed red to aid in determining if leakage is from the engine or transmission. Unless a considerable amount of makeup fluid has been added or the fluid has been changed, the red color should assist in pinpointing the leak.

Official Licensed Product Ford Motor Company

DIAGNOSIS AND TESTING (Continued)

2. Remove the torque converter housing cover. Clean off any fluid from the top and bottom of the torque converter housing, front of the case (7005) and rear face of the engine and oil pan (6675) . Clean the torque converter area by washing with a suitable nonflammable solvent and blow dry with compressed air.
3. Wash out the torque converter housing, the front of the flywheel and the converter drain plugs. The torque converter housing may be washed out using cleaning solvent and a squirt-type oil can. Blow all washed areas dry with compressed air.
4. Start and run the engine until the transmission reaches its normal operating temperature. Observe the back of the cylinder block and top of the torque converter housing for evidence of fluid leakage. Raise the vehicle on a hoist; refer to Section 100-02 and run the engine at fast idle, then at engine idle, occasionally shifting to the Overdrive and Reverse ranges to increase pressure within the transmission. Observe the front of the flywheel, back of the cylinder block (in as far as possible), and inside the torque converter housing and front of the case . Run the engine until fluid leakage is evident and the probable source of leakage can be determined.

Leak Check Test With Black Light Used With 12 Volt Master UV Diagnostic Inspection Kit

Oil soluble aniline or fluorescent dyes premixed at the rate of 2.5ml (1/2 teaspoon) of dye powder to 0.235L (1/2 pint) of transmission fluid have proved helpful in locating the source of fluid leakage. Such dyes may be used to determine whether an engine oil or transmission fluid leak is present, or if the fluid in the fluid cooler leaks into the engine cooling system. A black light must be used with the fluorescent dye solution.

Transmission Fluid Cooler

Transmission Fluid Cooler Flow Test

⚠ **CAUTION: Whenever a transmission has been disassembled to replace worn or damaged parts the cooler bypass valve (CBV), all transmission fluid coolers (in tank and auxiliary) and transmission fluid cooler lines must be cleaned and backflushed. Use the torque converter/oil cooler cleaner.**

NOTE: Cleaning and backflushing the transmission fluid cooling system along with the following all the normal cleaning and inspection procedures in this section during disassembly and reassembly will keep contamination from reentering the transmission and causing a repeat repair.

When internal wear or damage has occurred in the transmission, metal particles, clutch plate material, or band material may have been carried into the torque converter and transmission fluid cooler (7A095) . These contaminants are a major cause of recurring transmission troubles and must be removed from the system before the transmission is put back into use.

NOTE: The transmission linkage/cable adjustment, fluid level and line pressure must be within specification before performing this test; refer to Section 307-05 for adjustments.

1. Remove fluid level indicator from fluid filler tube.
2. Place funnel in fluid filler tube.
3. Raise the vehicle on a hoist; refer to Section 100-02 and place suitable safety stands under the vehicle.
4. Remove the cooler return tube (rear fitting) from the fitting on the transmission case.

Ford Motor Company Licensed Product

DIAGNOSIS AND TESTING (Continued)

5. Connect one end of a hose to the cooler return tube and route other end of the hose up to a point where it can be inserted into the funnel at the fluid filler tube.
6. Remove the safety stands and lower the vehicle. Insert end of hose into the funnel.
7. Start the engine and run it at idle with the transmission in Neutral position.
8. Once a steady flow of fluid (without air bubbles) is observed, remove the hose from the funnel and place the hose in a measuring container for 30 seconds. After 30 seconds place the hose back into the funnel and turn the engine off. Measure the amount of fluid in the container. If adequate flow was observed, approximately 1.0 liter (1.057 quarts) will be in the measuring container; the test is now complete.
9. If the flow is not liberal, stop the engine. Disconnect the hose from the cooler return tube and connect it to the converter outline fitting (front fitting) on the transmission case.
10. Repeat Steps 7 and 8. If flow is now approximately 1 liter (1 quart) in 30 seconds; refer to transmission removal for cleaning and back flushing. If the flow is still not approximately 1 liter (1 quart) in 30 seconds service the pump and/or converter.

Transmission Fluid Cooler or Tube Replacement

Refer to Section 307-02.

Diagnosis by Symptom

Special Tool(s)

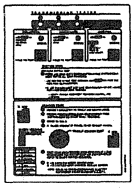	Digital TRS Sensor Overlay 007-00131 or equivalent
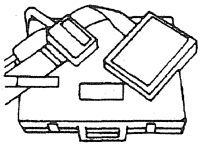 ST1391-A	EEC-V 104-Pin Breakout Box 418-049 (014-00950) or equivalent
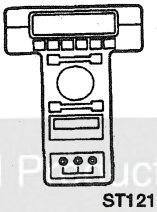 ST1217-A	New Generation Star (NGS) Tester 418-F048 (007-00500) or equivalent

(Continued)

Official Licensed Product Ford Motor Company

DIAGNOSIS AND TESTING (Continued)

Special Tool(s)

ST1137-A	73 Digital Multimeter 105-R0051 or equivalent
ST1632-A	TRS-E Cable 418-F107 (007-00111) or equivalent
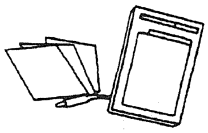 ST1389-A	Transmission Tester 007-00130 or equivalent
ST1300-A	12 Volt Master UV Diagnostic Inspection Kit 164-R0756 or equivalent
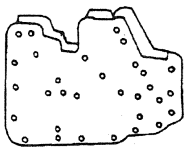 ST1392-A	AOD-E Transmission Test Plate 307-246 (T92P-7006-A)
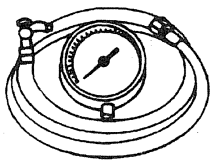 ST1565-A	Pressure Gauge 307-004 (T57L-77820-A)

The Diagnosis by Symptom charts give the technician diagnostic information, direction, and suggest possible components, using a symptom as a starting point.

The Diagnosis by Symptom charts are divided into two categories: Electrical Routines, indicated by 200 series numbers, and Hydraulic/Mechanical Routines, indicated by 300 series numbers. The Electrical Routines list the possible electrical components that could cause or contribute to the symptom described. The Hydraulic/Mechanical Routines list the possible hydraulic or mechanical components that could cause or contribute to the symptom described.

Diagnosis by Symptom Chart Directions

1. Using the Diagnosis by Symptom Index, select the Concern/Symptom that best describes the condition.
2. Refer to the routine indicated in the Diagnosis by Symptom Index.
3. Always begin diagnosis of a symptom with:
   a. Preliminary inspections.
   b. Verifications of condition.
   c. Checking the fluid levels.
   d. Performing other test procedures as directed.
4. **NOTE:** Not all concerns and conditions with electrical components will set a diagnostic trouble code (DTC). Be aware that the components listed may still be the cause. Verify proper function of these components prior to proceeding to the Hydraulic/Mechanical Routine listed.

   Begin with the Electrical Routine, if indicated. Follow the reference or action required statements. Always perform the on-board diagnostic tests as required. Never skip steps. Repair as required. If the concern is still present after electrical diagnosis, then proceed to the Hydraulic/Mechanical Routine listed.
5. The Hydraulic/Mechanical Routines list possible hydraulic or mechanical components that could cause the concern. These components are listed in the removal sequence and by most probable cause. All components listed must be inspected to ensure proper repair.

Official Licensed Product Ford Motor Company

DIAGNOSIS AND TESTING (Continued)

Diagnosis by Symptom Index

Title	Routines	
	Electrical(1)	Hydraulic/Mechanical
Engagement Concerns		
No Forward	201	301
No Reverse	202	302
Harsh Reverse	203	303
Harsh Forward	204	304
Delayed/Soft Reverse	205	305
Delayed/Soft Forward	206	306
Shift Concerns		
Some/All Shifts Missing	210	310
Timing Concerns		
—Early/Late	211	311
—Erratic/Hunting	212	312
Feel		
—Soft/Slipping	213	313
—Harsh	214	314
No 1st Gear, Engages in Higher Gear	215	315
No Manual 1st Gear	216	316
No Manual 2nd Gear	217	317
Torque Converter Operation Concerns		
No Apply	240	340
Always Applied/Stalls Vehicle	241	341
Cycling/Shudder/Chatter	242	342
Other Concerns		
No Engine Braking in 2nd Gear, Manual 2nd or Manual 1st Position	250	350
Gearshift Lever Efforts High	251	351
External Leaks	252	352
Poor Vehicle Performance	253	353
Noise/Vibration in Forward or Reverse	254	354
Engine Will Not Crank	255	355
No Park (P) Range	256	356
Overheating	257	357

(1) Perform electrical routine first.

Official Licensed Product
Ford Motor Company

Diagnostic Routines

Engagement Concern: No Forward

Possible Component	Reference/Action
201 — ELECTRICAL ROUTINE	
• No Electrical Concerns	
301 — HYDRAULIC/MECHANICAL ROUTINE	
Fluid	
• Improper level • Condition	• Adjust fluid to proper level. • Inspect as under Fluid Condition Check; refer to Verification of Condition in this section.

(Continued)

DIAGNOSIS AND TESTING (Continued)

Engagement Concern: No Forward

Possible Component	Reference/Action
Shift Linkage	
• Damaged, misadjusted	• Inspect and repair as required. Verify transmission shift cable adjustment; refer to Section 307-05. Adjust transmission shift cable as necessary. After repairing transmission shift cable, verify the digital transmission range (TR) sensor is properly adjusted; refer to the Digital Transmission Range (TR) Sensor—Adjustment in this section. Adjust the digital TR sensor as necessary.
Improper Pressures	
• Low forward clutch pressure, low line pressure	• Check pressure at line and forward clutch tap. Refer to Line Pressure Chart for specification. If pressures are low, check the following components: oil filter and seal assembly, main controls, pump assembly, forward clutch assembly.
Fluid Filter and Seal Assembly	
• Plugged, damaged • Filter seal damaged	• Replace filter and seal assembly.
Main Controls	
• 3-4 shift valve, main regulator valve, manual valve — stuck, damaged	• Inspect for damage. Repair as required.
• Bolts not tightened to specifications	• Tighten bolts to specifications.
• Gaskets damaged	• Inspect gaskets for damage and replace.
• 2-3 accumulator and seals damaged	• Inspect piston, seals and bore for damage. Repair as required.
Pump Assembly	
• Bolts not tightened to specifications	• Tighten bolts to specifications.
• Porosity/cross leaks/ball missing or leaking, plugged hole	• Inspect for porosity and leaks. Repair as required.
• No. 3 and No. 4 seal rings damaged	• Inspect seals for damage. Repair as required.
• Gaskets damaged	• Inspect for damage and replace.
Forward Clutch Assembly	
• Seals, piston damaged	• Inspect seals for damage. Repair as required.
• Check balls damaged, missing, mislocated, not seating properly	• Inspect for mislocation, poor seating, damage. Replace cylinder as required.
• Friction elements damaged or worn	• Check for abnormal wear, damage. Repair as required.
One-Way Clutch Assembly (Planetary)	
• Worn, damaged or assembled incorrectly	• Inspect for damage. Repair as required.
Output Shaft	
• Damaged	• Inspect for damage. Repair as required.

Official Licensed Product
Ford Motor Company

Engagement Concern: No Reverse

Possible Component	Reference/Action
202 — ELECTRICAL ROUTINE	
• No Electrical Concerns	
302 — HYDRAULIC/MECHANICAL ROUTINE	
Fluid	
• Improper level	• Adjust fluid to proper level.

(Continued)

DIAGNOSIS AND TESTING (Continued)

Engagement Concern: No Reverse

Possible Component	Reference/Action
• Condition	• Inspect as under Fluid Condition Check; refer to Verification of Condition in this section.
Shift Linkage	
• Damaged or out of adjustment	• Inspect and repair as required. Verify transmission shift cable adjustment; refer to Section 307-05. Adjust transmission shift cable as necessary. After repairing transmission shift cable, verify that the digital TR sensor is properly adjusted; refer to the Digital Transmission Range (TR) Sensor—Adjustment in this section. Adjust the digital TR sensor as necessary.
Improper Pressures	
• Low reverse clutch pressure, low reverse band pressure, low line pressure	• Check pressure at line pressure tap; refer to Line Pressure Chart for specifications. If pressures are low, check the following components: oil filter and seal assembly, main controls, reverse servo, pump assembly, reverse clutch assembly.
Fluid Filter and Seal Assembly	
• Plugged, damaged	• Replace filter and seal assembly.
Main Controls	
• No. 6 shuttle ball, manual valve, main regulator valve, 1-2 accumulator seals stuck or damaged • Loose bolts • Gasket damaged	• Inspect for damage. Repair as required. • Tighten bolts to specifications. • Inspect for damage and replace.
Low/Reverse Servo	
• Seals (piston and cover) damaged • Servo cover retaining ring damaged • Anchor pins (case) damaged	• Inspect for damage. Repair as required.
Pump Assembly	
• Loose bolts • Porosity/cross leaks/ball missing or leaking, plugged hole • Gasket damaged • No. 1 and 2 seal rings damaged	• Tighten bolts to specifications. • Inspect pump assembly. Replace as required. • Inspect for damage and replace. • Inspect for damage. Repair as required.
Reverse Clutch Assembly	
• Seals, piston damaged • Check ball missing or damaged • Friction elements damaged or worn	• Inspect for damage. Repair as required.
Low/Reverse Band	
• Band, servo, anchor pins damaged or worn	• Inspect for damage. Repair as required.

Official Licensed Product Ford Motor Company®

DIAGNOSIS AND TESTING (Continued)

Engagement Concern: Harsh Reverse

Possible Component	Reference/Action
203 — ELECTRICAL ROUTINE	
Powertrain Control System	
• Electrical inputs/outputs, vehicle wiring harnesses, PCM, transmission fluid temperature (TFT) sensor, electronic pressure control (EPC) solenoid	• Run Self-Test; refer to Powertrain Control/Emissions Diagnosis Manual [13] for diagnosis and testing of the Powertrain Control System. Perform engagement test, EPC test and Pinpoint Tests B and E; refer to Pinpoint Tests. Repair as required. Clear DTCs, road test and rerun Self-Test.
303 — HYDRAULIC/MECHANICAL ROUTINE	
Fluid	
• Improper level • Condition	• Adjust fluid to proper level. • Inspect as under Fluid Condition Check; refer to Verification of Condition in this section.
Shift Linkage	
• Damaged or misadjusted	• Inspect and repair as required. Verify transmission shift cable adjustment; refer to Section 307-05. Adjust transmission shift cable as necessary. After repairing transmission shift cable, verify that the digital TR sensor is properly adjusted; refer to the Digital Transmission Range (TR) Sensor—Adjustment in this section. Adjust the digital TR sensor as necessary.
Improper Pressures	
• High line pressure, high EPC pressure	• Check pressure at line and EPC pressure taps; refer to Line Pressure Chart for specifications. If high, check the following components: main controls, oil filter and seal assembly.
Fluid Filter and Seal Assembly	
• Plugged or damaged • Filter seal damaged	• Replace filter and seal assembly.
Main Controls	
• No. 6 shuttle ball, No. 5 check ball, manual valve, main regulator valve stuck, damaged or missing • Bolts not tightened to specifications • Gasket damaged • EPC solenoid stuck or damaged	• Inspect for damage. Repair as required. • Tighten bolts to specifications. • Inspect for damage and replace. • Inspect for damage, contamination. Perform EPC test in Routine No. 203. Repair as required.
Low Reverse Servo	
• Seals (piston and cover) damaged • Servo cover retaining ring assembled incorrectly • Anchor pins (case) damaged	• Inspect for damage. Repair as required.
Pump Assembly	
• Bolts not tightened to specifications • Porosity/cross leaks • Gasket damaged • No. 1 and No. 2 seal rings damaged	• Tighten bolts to specifications. • Inspect pump assembly. Replace as required. • Inspect for damage and replace. • Inspect for damage. Repair as required.
Reverse Clutch Assembly	
• Seals, piston damaged	• Inspect for damage. Repair as required.

(Continued)

Official Licensed Product
Ford Motor Company

13 Can be purchased as a separate item.

DIAGNOSIS AND TESTING (Continued)

Engagement Concern: Harsh Reverse

Possible Component	Reference/Action
• Check ball missing or damaged • Friction elements damaged, worn • Return spring piston damaged, worn	
Low Reverse Band	
• Band, servo, anchor pin damaged or worn	• Inspect for damage. Repair as required.

Engagement Concern: Harsh Forward

Possible Component	Reference/Action
204 — ELECTRICAL ROUTINE	
Powertrain Control System	
• Electrical inputs/outputs, vehicle wiring harnesses, PCM, TFT sensor, EPC solenoid	• Run Self-Test; refer to Powertrain Control/Emissions Diagnosis Manual [14] for diagnosis and testing of the Powertrain Control System. Perform engagement test, EPC test and Pinpoint Tests B and E; refer to the pinpoint tests. Repair as required. Clear DTCs, road test and rerun Self-Test.
304 — HYDRAULIC/MECHANICAL ROUTINE	
Fluid	
• Improper level • Condition	• Adjust fluid to proper level. • Inspect as under Fluid Condition Check; refer to Verification of Condition in this section.
Improper Pressures	
• High forward clutch pressure, high line pressure, high EPC pressure	• Check pressure at line, EPC and forward pressure taps. Refer to Line Pressure Chart for specifications. If pressures are high, check the following possible components: main controls, pump assembly.
Main Controls	
• Main regulator valve, 2-3 accumulator seal/retainer stuck, damaged • Bolts not tightened to specifications • Gaskets damaged • EPC solenoid stuck or damaged	• Inspect and repair as required. • Tighten bolts to specifications. • Inspect for damage and replace. • Inspect for damage or contamination. Perform EPC test in Routine 204. Repair as required.
Pump Assembly	
• Bolts not tightened to specifications • Porosity/cross leaks • Gaskets damaged	• Tighten bolts to specifications. • Inspect for porosity/leaks. Replace pump as required. • Inspect for damage and replace.
Forward Clutch Assembly	
• Check balls missing or damaged • Friction element damaged or worn • Forward clutch wave spring damaged • Forward clutch return spring damaged	• Inspect for mislocation, poor seating, damage. Replace forward clutch cylinder. • Inspect for damage. Repair as required. • Inspect for damage. Repair as required. • Inspect for damage. Repair as required.

Official Licensed Publication Ford Motor Company

14 Can be purchased as a separate item.

DIAGNOSIS AND TESTING (Continued)

Engagement Concern: Delayed/Soft Reverse

Possible Component	Reference/Action
205 — ELECTRICAL ROUTINE	
• No Electrical Concerns	
305 — HYDRAULIC/MECHANICAL ROUTINE	
Fluid	
• Improper level • Condition	• Adjust fluid to proper level. • Inspect as under Fluid Condition Check; refer to Verification of Condition in this section.
Shift Linkage	
• Damaged, misadjusted	• Inspect and repair as required. Verify transmission shift cable adjustment; refer to Section 307-05. Adjust transmission shift cable as necessary. After repairing transmission shift cable, verify that the digital TR sensor is properly adjusted; refer to the Digital Transmission Range (TR) Sensor—Adjustment in this section. Adjust the digital TR sensor as necessary.
Improper Pressures	
• Low reverse clutch pressure, low reverse band pressure, low line pressure	• Check pressure at line tap; refer to Line Pressure Chart for specifications. If pressures are low, check the following components: main controls, pump assembly, reverse clutch assembly, reverse servo.
Fluid Filter and Seal Assembly	
• Plugged, damaged • Filter seal damaged	• Replace filter and seal assembly.
Main Controls	
• No. 6 shuttle ball, 1-2 accumulator seals, manual valve, main regulator valve stuck or damaged	• Inspect for damage. Repair as required.
• Bolts not tightened to specifications	• Tighten bolts to specifications.
• Gaskets damaged	• Inspect for damage and replace.
Low Reverse Servo	
• Seals (piston and cover) damaged • Servo cover retaining ring assembled incorrectly	• Inspect for damage. Repair as required.
Pump Assembly	
• Bolts not tightened to specification	• Tighten bolts to specification.
• Porosity/cross leaks/ball missing or leaking	• Inspect pump assembly. Replace as required.
• Gaskets damaged	• Inspect for damage and replace.
• No. 1 and No. 2 seal rings damaged	• Inspect for damage. Repair as required.
Reverse Clutch Assembly	
• Seals, piston damaged • Check ball missing or damaged • Friction elements damaged, worn • Return spring and piston damaged, worn	• Inspect for damage. Repair as required.
Low Reverse Band	
• Damaged, worn	• Inspect for damage. Repair as required.

Official Licensed Product
Ford Motor Company

DIAGNOSIS AND TESTING (Continued)

Engagement Concern: Delayed/Soft Forward

Possible Component	Reference/Action
206 — ELECTRICAL ROUTINE	
• No Electrical Concerns	
306 — HYDRAULIC/MECHANICAL ROUTINE	
Fluid	
• Improper level • Condition	• Adjust fluid to proper level. • Inspect as under Fluid Condition Check; refer to Verification of Condition in this section.
Shift Linkage	
• Damaged, misadjusted	• Inspect and repair as required. Verify transmission shift cable adjustment; refer to Section 307-05. Adjust transmission shift cable as necessary. After repairing transmission shift cable, verify that the digital TR sensor is properly adjusted; refer to Digital Transmission Range (TR) Sensor—Adjustment in this section. Adjust the digital TR sensor as necessary.
Improper Pressures	
• Low forward clutch pressure, low line pressure, low EPC pressure	• Check pressure at line, forward clutch and EPC taps; refer to Line Pressure Chart for specifications. If pressures are low, check the following components: oil filter and seal assembly, main controls and pump assembly.
Fluid Filter and Seal Assembly	
• Plugged, damaged • Filter seal damaged	• Replace filter and seal assembly.
Main Controls	
• 3-4 shift valve, main regulator valve stuck or damaged • Bolts not tightened to specifications • Gaskets damaged • 2-3 or 1-2 accumulator, bore damaged or stuck	• Inspect and repair as required. • Tighten bolts to specifications. • Inspect for damage and replace. • Inspect for damage. Repair as required.
Pump Assembly	
• Bolts not tightened to specification • Porosity/cross leaks • Gaskets damaged • No. 3 and No. 4 seal rings damaged	• Tighten bolts to specifications. • Inspect pump assembly. Replace as required. • Inspect for damage and replace. • Inspect for damage. Repair as required.
Forward Clutch Assembly	
• Seals, piston damaged • Check balls missing, damaged • Friction elements damaged, worn	• Inspect for damage. Repair as required. • Inspect for mislocation, poor seating, damage. Replace cylinder as required. • Check for damage. Repair as required.

Official Licensed Product
Ford Motor Company

DIAGNOSIS AND TESTING (Continued)

Shift Concerns: Some/All Shifts Missing

Possible Component	Reference/Action
210 — ELECTRICAL ROUTINE	
Powertrain Control System	
• Electrical inputs/outputs, vehicle wiring harnesses, PCM, shift solenoids, output shaft speed sensor (OSS), digital TR sensor	• Run Self-Test; refer to Powertrain Control/Emissions Diagnosis Manual [15] for diagnosis and testing of the Powertrain Control System. Perform Pinpoint Tests A, D and F using Transmission Tester. Repair as required. Clear DTCs, road test and rerun Self-Test.
310 — HYDRAULIC/MECHANICAL ROUTINE	
Fluid	
• Improper level • Condition	• Adjust fluid to proper level. • Inspect as under Fluid Condition Check; refer to Verification of Condition in this section.
Shift Linkage, Digital TR Sensor	
• Damaged, misadjusted	• Inspect and repair as required. Verify transmission shift cable adjustment; refer to Section 307-05. Adjust transmission shift cable as necessary. After repairing transmission shift cable, verify that the digital TR sensor is properly adjusted; refer to the Digital Transmission Range (TR) Sensor—Adjustment in this section. Adjust the digital TR sensor as necessary. • Refer to the following shift routine(s) for further diagnosis: — Shift 1-2, Routine 220/320 — Shift 2-3, Routine 221/321 — Shift 3-4, Routine 222/322 — Shift 4-3, Routine 223/323 — Shift 3-2, Routine 224/324 — Shift 2-1, Routine 225/325

Official Licensed Product
Ford Motor Company

Shift Concerns: Timing Concerns — Early/Late

Possible Component	Reference/Action
211 — ELECTRICAL ROUTINE	
Powertrain Control System	
• Electrical inputs/outputs, vehicle wiring harnesses, PCM, shift solenoids, EPC solenoid, TFT sensor, OSS	• Run Self-Test. Refer to Powertrain Control/Emissions Diagnosis Manual[15] for diagnosis and testing of the Powertrain Control System. Perform Pinpoint Tests A, B, E and F using Transmission Tester. Repair as required. Clear DTCs, road test and rerun Self-Test.
311 — HYDRAULIC/MECHANICAL ROUTINE	
Other	
• Tire size change, axle ratio change	• Verify vehicle has original equipment. Refer to Certification Label and Safety Standard Certification Label. Changes in tire size or axle ratio will affect shift timing.
Fluid	
• Improper level • Condition	• Adjust fluid to proper level. • Inspect as under Fluid Condition Check; refer to Verification of Condition in this section.

(Continued)

15 Can be purchased as a separate item.

DIAGNOSIS AND TESTING (Continued)

Shift Concerns: Timing Concerns — Early/Late

Possible Component	Reference/Action
Improper Pressures	
• Line pressure, EPC pressure	• Check pressure at line and EPC taps; refer to Line Pressure Chart for specifications. If not OK, check the main controls. If OK, refer to the shift routine(s) for further diagnosis: — Shift 1-2, Routine 320 — Shift 2-3, Routine 321 — Shift 3-4, Routine 322 — Shift 4-3, Routine 323 — Shift 3-2, Routine 324 — Shift 2-1, Routine 325
Main Controls	
• EPC solenoid, stuck or damaged hydraulically or mechanically	• Inspect for damage, contamination. Perform EPC tests in Routine No. 211. Repair as required.
• Valves, accumulators, seals stuck or damaged or assembled incorrectly	• Inspect for damage. Repair as required.
• Gaskets damaged	• Inspect for damage and replace.
• Solenoid screen (in valve body) blocked or damaged	• Clean or replace screen.

Shift Concerns: Timing Concerns — Erratic/Hunting

Possible Component	Reference/Action
212 — ELECTRICAL ROUTINE	
Powertrain Control System	
• Electrical inputs/outputs, vehicle wiring harnesses, PCM, shift solenoids, torque converter clutch (TCC) solenoid, digital TR sensor, output shaft speed (OSS)	• Run Self-Test. Refer to Powertrain Control/Emissions Diagnosis Manual [16] for diagnosis. Perform Pinpoint Tests A, D and F using Transmission Tester. Repair as required. Clear DTCs, road test and rerun Self-Test.
312 — HYDRAULIC/MECHANICAL ROUTINE	
Fluid	
• Improper level	• Adjust fluid to proper level.
• Condition	• Inspect as under Fluid Condition Check; refer to Verification of Condition in this section.
Main Controls	
• Valves, accumulators, seals, assembled wrong, stuck or damaged	• Inspect for damage. Repair as required.
• Gaskets damaged	• Inspect for damage and replace.
• Solenoid screen (in valve body) blocked or damaged	• Clean or replace screen.
Torque Converter Clutch	
• Torque converter	• Refer to Torque Converter Operation Concerns: Cycling/Shudder/Chatter Hydraulic/Mechanical Routine 342.
Specific Shifts	
	• Refer to the following shift routine(s) for further diagnosis: — Shift 1-2, Routine 320 — Shift 2-3, Routine 321 — Shift 3-4, Routine 322 — Shift 4-3, Routine 323 — Shift 3-2, Routine 324 — Shift 2-1, Routine 325

16 Can be purchased as a separate item.

DIAGNOSIS AND TESTING (Continued)

Shift Concerns: Feel — Soft/Slipping

Possible Component	Reference/Action
213 — ELECTRICAL ROUTINE	
Powertrain Control System	
• Electrical inputs/outputs, vehicle wiring harnesses, PCM, EPC solenoid, OSS	• Run Self-Test. Refer to Powertrain Control/Emissions Diagnosis Manual [17] for diagnosis and testing of the Powertrain Control System. Perform Pinpoint Tests E and F using Transmission Tester. Repair as required. Clear DTCs, road test and rerun Self-Test.
313 — HYDRAULIC/MECHANICAL ROUTINE	
Fluid	
• Improper level • Condition	• Adjust fluid to proper level. • Inspect as under Fluid Condition Check; refer to Verification of Condition in this section.
Improper Pressures	
• Low line pressure, low EPC pressure	• Check pressures at line and EPC taps; refer to Line Pressure Chart for specifications. If pressures are low or all shifts are soft/slipping, go to main controls. If pressures are OK and a specific shift is soft/slipping, refer to the following routine(s) for further diagnosis: — Shift 1-2, Routine 320 — Shift 2-3, Routine 321 — Shift 3-4, Routine 322 — Shift 4-3, Routine 323 — Shift 3-2, Routine 324 — Shift 2-1, Routine 325
Main Controls	
• 1-2 accumulator, main regulator valve, overdrive servo regulator valve stuck, damaged or assembled incorrectly	• Inspect for damage. Repair as required.
• EPC solenoid stuck or damaged	• Inspect for damage and contamination. Perform EPC tests in Routine 213. Repair as required.

Official Licensed Ford Publication

Shift Concerns: Feel — Harsh

Possible Component	Reference/Action
214 — ELECTRICAL ROUTINE	
Powertrain Control System	
• Electrical inputs/outputs, vehicle wiring harnesses, PCM, EPC solenoid, OSS	• Run Self-Test. Refer to Powertrain Control/Emissions Diagnosis Manual [17] for diagnosis and testing of the Powertrain Control System. Perform Pinpoint Tests E and F using Transmission Tester. Repair as required. Clear DTCs, road test and rerun Self-Test.
314 — HYDRAULIC/MECHANICAL ROUTINE	
Fluid	
• Improper level • Condition	• Adjust fluid to proper level. • Inspect as under Fluid Condition Check; refer to Verification of Condition in this section.

(Continued)

17 Can be purchased as a separate item.

DIAGNOSIS AND TESTING (Continued)

Shift Concerns: Feel — Harsh

Possible Component	Reference/Action
Improper Pressures	
• High line pressure, high EPC pressure	• Check pressures at line and EPC taps. Refer to Line Pressure Chart for specifications. If pressures are high or all shifts are harsh, go to Main Controls. If pressures are OK and a specific shift is harsh, refer to the following shift routine(s) for further diagnosis: — Shift 1-2, Routine 320 — Shift 2-3, Routine 321 — Shift 3-4, Routine 322 — Shift 4-3, Routine 323 — Shift 3-2, Routine 324 — Shift 2-1, Routine 325
Main Controls	
• 1-2 accumulator, main regulator valve, overdrive servo regulator valve stuck, damaged or assembled incorrectly	• Inspect for damage. Repair as required.
• EPC solenoid stuck or damaged	• Inspect for damage or contamination. Perform EPC tests in Routine 214. Repair as required.

Shift Concerns: No 1st Gear, Engages In Higher Gear

Possible Component	Reference/Action
215 — ELECTRICAL ROUTINE	
Powertrain Control System	
• Electrical inputs/outputs, vehicle wiring harnesses, PCM, shift solenoids, digital transmission range TR sensor	• Run Self-Test. Refer to Powertrain Control/Emissions Diagnosis Manual [18] for diagnosis and testing of the Powertrain Control System. Perform Pinpoint Tests A and D using Transmission Tester. Repair as required. Clear DTCs, road test and rerun Self-Test.
315 — HYDRAULIC/MECHANICAL ROUTINE	
Shift Linkage, Digital TR Sensor	
• Damaged or misadjusted	• Inspect and repair as required. Verify transmission shift cable adjustment. Refer to Section 307-05. Adjust transmission shift cable as necessary. After repairing transmission shift cable, verify that the digital TR sensor is properly adjusted; refer to the the Digital Transmission Range (TR) Sensor—Adjustment in this section. Adjust the digital TR sensor as necessary.
Improper Pressures	
• Low reverse clutch pressure, low reverse band pressure, low line pressure • Forward Off, Intermediate Off, Direct X • Forward Off, Intermediate X, Direct Off • Forward Off, Intermediate X, Direct X • Forward X, Intermediate Off, Direct X • Forward X, Intermediate X, Direct Off • Forward X, Intermediate X, Direct X • Forward X, Intermediate Off, Direct Off	• Check for which pressures are on and refer to Band/Clutch Application Chart 601 and corresponding routines. — 324, 301 — 325, 301 — 323, 324, 325, 301 — 324 — 325 — 323, 324, 325 — Refer to appropriate mechanical diagnosis.
Mechanical	
• Bands, clutches or seals damaged or worn	• Refer to Transmission Disassembly and Assembly in this section.

X = pressure applied

18 Can be purchased as a separate item.

DIAGNOSIS AND TESTING (Continued)

Shift Concerns: No Manual 1st Gear

Possible Component	Reference/Action
216 — ELECTRICAL ROUTINE	
Powertrain Control System	
• Electrical inputs/outputs, vehicle wiring harnesses, PCM, shift solenoids, digital TR sensor	• Run Self-Test. Refer to Powertrain Control/Emissions Diagnosis Manual [19] for diagnosis and testing of the Powertrain Control System. Perform Pinpoint Tests A and D using Transmission Tester. Repair as required. Clear DTCs, road test and rerun Self-Test.
316 — HYDRAULIC/MECHANICAL ROUTINE	
Shift Linkage, Cable, Digital TR Sensor	
• Damaged or misadjusted	• Inspect and repair as required. Verify transmission shift cable adjustment; refer to Section 307-05. Adjust transmission shift cable as necessary. After repairing transmission shift cable, verify that the digital TR sensor is properly adjusted; refer to the the Digital Transmission Range (TR) Sensor—Adjustment in this section. Adjust the digital TR sensor as necessary.
Improper Pressures	
• Low reverse clutch pressure, low reverse band pressure, low line pressure, low EPC pressure	• Check pressure at line and EPC pressure taps; refer to Line Pressure Chart for specifications. If pressures are low, check the following components: oil filter and seal assembly, main controls, reverse clutch assembly and reverse servo assembly.
Fluid Filter and Seal Assembly	
• Plugged or damaged	• Replace filter and seal assembly.
Main Controls	
• No. 6 shuttle ball, manual valve, main regulator valve, low servo modulator valve stuck, damaged or assembled incorrectly	• Inspect for damage. Repair as required.
• Bolts not tightened to specifications	• Tighten bolts to specifications.
• Gaskets damaged	• Inspect for damage and replace.
Low Reverse Servo	
• Seals (piston and cover) damaged • Servo cover retaining ring assembled incorrectly • Anchor pins (case) damaged	• Inspect for damage. Repair as required.

Official Licensed Product
Ford Motor Company

19 Can be purchased as a separate item.

DIAGNOSIS AND TESTING (Continued)

SHIFT CONCERNS: NO MANUAL 2ND GEAR

Possible Component	Reference/Action
217 — ELECTRICAL ROUTINE	
Powertrain Control System	
• Electrical inputs/outputs, vehicle wiring harnesses, PCM, shift solenoids, digital TR sensor	• Run Self-Test. Refer to Powertrain Control/Emissions Diagnosis Manual [20] for diagnosis and testing of the Powertrain Control System. Perform Pinpoint Tests A and D using Transmission Tester. Repair as required. Clear DTCs, road test and rerun Self-Test.
317 — HYDRAULIC/MECHANICAL ROUTINE	
Shift Linkage, Cable, Digital TR Sensor	
• Damaged, misadjusted	• Inspect and repair as required. Verify transmission shift cable adjustment; refer to Section 307-05. Adjust transmission shift cable as necessary. After repairing transmission shift cable, verify that the digital TR sensor is properly adjusted; refer to the the Digital Transmission Range (TR) Sensor—Adjustment in this section. Adjust the digital TR sensor as necessary.
Main Controls	
• 3-4 shift valve, 1-2 and 2-3 shift valve, 3-4 capacity modulator valve stuck, damaged or assembled incorrectly	• Inspect for damage. Repair as required.
• Bolts not tightened to specifications	• Tighten bolts to specifications.
• Gaskets damaged	• Inspect for damage and replace.

Official Licensed Product Ford Motor Company

Shift Concerns: 1-2 Shift (Automatic)

Possible Component	Reference/Action
220 — ELECTRICAL ROUTINE	
Powertrain Control System	
• Electrical inputs/outputs, vehicle wiring harnesses, PCM, shift solenoids, OSS	• Run Self-Test. Refer to Powertrain Control/Emissions Diagnosis Manual [20] for diagnosis and testing of the Powertrain Control System. Perform Pinpoint Tests A and F using Transmission Tester. Repair as required. Clear DTCs, road test and rerun Self-Test.
320 — HYDRAULIC/MECHANICAL ROUTINE	
Shift Linkage, Digital TR Sensor	
• Damaged or misadjusted	• Inspect and repair as required. Verify transmission shift cable adjustment; refer to Section 307-05. Adjust transmission shift cable as necessary. After repairing transmission shift cable, verify that the digital TR sensor is properly adjusted; refer to the the Digital Transmission Range (TR) Sensor—Adjustment in this section. Adjust the digital TR sensor as necessary.
Improper Pressures	
• Intermediate clutch pressure, line pressure	• Check pressure at line and intermediate clutch taps; refer to Line Pressure Chart for specifications. If not OK, check the main controls.
Main Controls	
• 1-2 shift valve, 1-2 accumulator valve stuck or damaged	• Inspect for damage. Repair as required.
• Bolts not tightened to specifications	• Tighten bolts to specification.

(Continued)

20 Can be purchased as a separate item.

DIAGNOSIS AND TESTING (Continued)

Shift Concerns: 1-2 Shift (Automatic)

Possible Component	Reference/Action
• Shift solenoid SSA/SS1 malfunction	• Activate solenoid using transmission tester. If solenoid operation cannot be felt when placing hand on solenoid, replace solenoid. Inspect O-rings for damage. Repair as required.
• Gasket damaged	• Inspect for damage and replace.
• No. 8 ball not seating	• Inspect for damage. Repair as required.
Pump	
• Porosity/cross leaks, balls missing, damaged or leaking	• Inspect for porosity/leaks, balls missing. Replace pump as required.
• Gasket damaged	• Inspect for damage and replace.
Intermediate Clutch Assembly	
• Seals damaged	• Inspect for damage. Repair as required.
• Piston damaged	• Inspect for damage. Repair as required.
• Friction elements damaged or worn	• Inspect for damage. Repair as required.
Intermediate One-Way Clutch Assembly	
• Not holding or damaged	• Inspect for damage. Repair as required.
Planetary One-Way Clutch Assembly	
• Not overrunning or damaged	• Inspect for damage. Repair as required.

Shift Concerns: 2-3 Shift (Automatic)

Special Licensed Product

Possible Component	Reference/Action
221 — ELECTRICAL ROUTINE	
Powertrain Control System	
• Electrical inputs/outputs, vehicle wiring harnesses, PCM, shift solenoids, OSS	• Run Self-Test. Refer to Powertrain Control/Emissions Diagnosis Manual [21] for diagnosis and testing of the Powertrain Control System. Perform Pinpoint Tests A and F using Transmission Tester. Repair as required. Clear DTCs, road test and rerun Self-Test.
321 — HYDRAULIC/MECHANICAL ROUTINE	
Shift Linkage	
• Damaged or misadjusted	• Inspect and repair as required. Verify transmission shift cable adjustment. Refer to Section 307-05. Adjust transmission shift cable as necessary. After repairing transmission shift cable, verify that the digital TR sensor is properly adjusted. Refer to the Digital Transmission Range (TR) Sensor—Adjustment in this section. Adjust the digital TR sensor as necessary.
Improper Pressures	
• Direct clutch pressure	• Check pressure at direct clutch tap; refer to Line Pressure Chart for specifications. If not OK, check the main controls.
Main Controls	
• 2-3 shift valve, check ball No. 9 or No. 3, solenoid pressure regulator valve, 2-3 modulator valve, damaged or assembled incorrectly	• Inspect for damage. Repair as required.
• Bolts not tightened to specifications	• Tighten bolts to specifications.

(Continued)

21 Can be purchased as a separate item.

DIAGNOSIS AND TESTING (Continued)

Shift Concerns: 2-3 Shift (Automatic)

Possible Component	Reference/Action
• Shift solenoid (SSB/SS2) malfunction	• Activate solenoid using transmission tester. If solenoid operation cannot be felt when placing hand on solenoid, replace solenoid. Inspect O-rings for damage. Repair as required.
• Gaskets damaged	• Inspect for damage and replace.
• Output shaft seals damaged or cup plug leaking or missing	• Inspect for damage and repair as required.
• 2-3 accumulator damaged or stuck	• Inspect piston seal and bore for damage. Repair as required.
• Solenoid screen (in main control) blocked or damaged	• Clean or replace screen.
Intermediate One-Way Clutch Assembly	
• Not overrunning or damaged	• Inspect for damage. Repair as required.
Output Shaft	
• Seal rings damaged • Cup plug damaged or missing	• Inspect for damage. Repair as required.
Direct Clutch Assembly	
• Seals or piston damaged	• Inspect for damage. Repair as required.
• Friction elements worn or damaged	• Inspect for damage. Repair as required.
• Check ball not seating	• Inspect for damage. Repair as required.
• Return spring assembly damaged	• Inspect for damage. Repair as required.
Case	
• Output shaft rear seals leaking or damaged	• Inspect for damage. Repair as required. Inspect case for damaged seal area. If damaged, replace the case.

Special License Ford Motor Company

Shift Concerns: 3-4 Shift (Automatic)

Possible Component	Reference/Action
222 — ELECTRICAL ROUTINE	
Powertrain Control System	
• Electrical inputs/outputs, vehicle wiring harnesses, PCM, shift solenoids, OSS, transmission control switch (TCS)	• Run Self-Test. Refer to Powertrain Control/Emissions Diagnosis Manual [22] for diagnosis and testing of the Powertrain Control System. Perform Pinpoint Tests A and F using Transmission Tester. Repair as required. Clear DTCs, road test and rerun Self-Test.
322 — HYDRAULIC/MECHANICAL ROUTINE	
Shift Linkage, Digital TR Sensor	
• Damaged or misadjusted	• Inspect and repair as required. Verify transmission shift cable adjustment; refer to Section 307-05. Adjust transmission shift cable as necessary. After repairing transmission shift cable, verify that the digital TR sensor is properly adjusted; refer to the the Digital Transmission Range (TR) Sensor—Adjustment in this section. Adjust the digital TR sensor as necessary.
Improper Pressures	
• Forward clutch pressure, direct clutch pressure, line pressure	• Check line, direct and forward clutch pressures at appropriate taps; refer to Line Pressure Chart for specifications. If pressures are out of specification, check main controls.

(Continued)

22 Can be purchased as a separate item.

DIAGNOSIS AND TESTING (Continued)

Shift Concerns: 3-4 Shift (Automatic)

Possible Component	Reference/Action
Main Controls	
• 3-4 shift valve, solenoid pressure regulator valve, OD servo regulator, 3-4 capacity modulator valve, 1-2 and 2-3 shift valves stuck, damaged or assembled incorrectly	• Inspect for damaged. Repair as required.
• Bolts not tightened to specifications	• Tighten bolts to specifications.
• SSA/SS1 or SSB/SS2 malfunction	• Activate solenoid using transmission tester. If solenoid operation cannot be felt when placing hand on solenoid, replace solenoid. Inspect O-rings for damage. Repair as required.
• Gaskets damaged	• Inspect for damage and replace.
• OD servo rod and piston cushion spring or seals damaged	• Inspect for damage. Repair as required.
• No. 2, No. 4, No. 7 and No. 9 check balls damaged or missing	• Inspect for damage. Repair as required.
• Solenoid screen (in main control) blocked or damaged	• Clean or replace screen.
Pump	
• Porosity/cross leaks, balls missing, damaged or leaking	• Inspect for porosity/leaks, balls missing. Replace pump as required.
• Gaskets damaged	• Inspect for damage. Replace as required.
OD Band	
• OD band and reverse clutch drum assembly damaged, worn or assembled incorrectly	• Inspect for damage. Repair as required.
• Intermediate one-way clutch assembly damaged	• Inspect for damage. Repair as required.
Forward Clutch Assembly	
• Seals or piston damaged	• Inspect for damage. Repair as required.
• Friction elements worn or damaged	• Inspect for damage. Repair as required.
• Check ball stuck, damaged or not seating properly	• Inspect for damage. Repair as required.
Input Shaft	
• Seals damaged	• Inspect for damage. Repair as required.

Shift Concerns: 4-3 Shift (Automatic)

Possible Component	Reference/Action
223 — ELECTRICAL ROUTINE	
Powertrain Control System	
• Electrical inputs/outputs, vehicle wiring harnesses, PCM, shift solenoids, transmission control switch (TCS)	• Run Self-Test. Refer to Powertrain Control/Emissions Diagnosis Manual [23] for diagnosis and testing of the Powertrain Control System. Perform Pinpoint Test A using Transmission Tester. Repair as required. Clear DTCs, road test and rerun Self-Test.
323 — HYDRAULIC/MECHANICAL ROUTINE	
Improper Pressures	
• Forward clutch pressure, line pressure	• Check line and forward clutch at pressure taps; refer to Line Pressure Chart for specifications. If out of specification, check the main controls.
Main Controls	
• 3-4 shift valve, solenoid pressure regulator valve, OD servo regulator, 3-4 capacity modulator, 1-2 and 2-3 shift valves stuck, damaged or assembled incorrectly	• Inspect for damage. Repair as required.

(Continued)

23 Can be purchased as a separate item.

DIAGNOSIS AND TESTING (Continued)

Shift Concerns: 4-3 Shift (Automatic)

Possible Component	Reference/Action
• Check balls No. 2, No. 7, No. 9 damaged, missing or not seating properly	• Inspect for damage. Repair as required.
• Bolts not tightened to specifications	• Tighten bolts to specification.
• SSA/SS1 malfunction	• Activate solenoid using transmission tester. If solenoid operation cannot be felt when placing hand on solenoid, replace solenoid. Inspect O-rings for damage. Repair as required.
• Gaskets damaged	• Inspect for damage and replace.
• OD servo, seal, rod damaged	• Inspect for damage. Repair as required.
• Solenoid screen (in main control) blocked or damaged	• Clean or replace screen.
Pump	
• Porosity/cross leaks, balls missing, damaged or leaking	• Inspect for porosity/leaks, balls missing. Replace pump as required.
• Seal rings damaged	• Inspect for damage. Repair as required.
• Gaskets damaged	• Inspect for damage and replace.
Overdrive Band	
• OD band and reverse clutch assembly damaged, worn or assembled incorrectly	• Inspect for damage. Repair as required.
• Intermediate one-way clutch assembly damaged	• Inspect for damage. Repair as required.
Forward Clutch Assembly	
• Seals or piston damaged	• Inspect for damage. Repair as required.
• Friction elements damaged, worn	• Inspect for damage. Repair as required.
• Check ball stuck, damaged or not seating properly	• Inspect for damage. Repair as required.
• Forward clutch piston and return spring damaged	• Inspect for damage. Repair as required.
Input Shaft	
• Seals damaged	• Inspect for damage. Repair as required.

Official Licensed Product Ford Motor Company

Shift Concerns: 3-2 Shift (Automatic)

Possible Component	Reference/Action
224 — ELECTRICAL ROUTINE	
Powertrain Control System	
• Electrical inputs/outputs, vehicle wiring harnesses, PCM, shift solenoids	• Run Self-Test. Refer to Powertrain Control/Emissions Diagnosis Manual [24] for diagnosis and testing of the Powertrain Control System. Perform Pinpoint Test A using Transmission Tester. Repair as required. Clear DTCs, road test and rerun Self-Test.
324 — HYDRAULIC/MECHANICAL ROUTINE	
Improper Pressures	
• Direct clutch	• Check pressure at direct clutch tap; refer to Line Pressure Chart for specifications. If not within specification, check the main controls.
Main Controls	
• 2-3 shift valve stuck or damaged	• Inspect for damage. Repair as required
• Check balls damaged or missing	• Inspect for damage. Repair as required.
• Bolts not tightened to specifications	• Tighten bolts to specifications.

(Continued)

24 Can be purchased as a separate item.

DIAGNOSIS AND TESTING (Continued)

Shift Concerns: 3-2 Shift (Automatic)

Possible Component	Reference/Action
• SSB/SS2 malfunction	• Activate solenoid using transmission tester. If solenoid operation cannot be felt when placing hand on solenoid, replace solenoid. Inspect O-rings for damage. Repair as required.
• Gaskets damaged	• Inspect for damage and replace.
Intermediate One-Way Clutch	
• Not holding or damaged	• Inspect for damage. Repair as required.
Direct Clutch Assembly	
• Seals or piston damaged	• Inspect for damage. Repair as required.
• Friction element damaged, worn	• Inspect for damage. Repair as required.
• Check ball stuck, damaged or not seating properly	• Inspect for damage. Repair as required.

Shift Concerns: 2-1 Shift (Automatic)

Possible Component	Reference/Action
225 — ELECTRICAL ROUTINE	
Powertrain Control System	
• Electrical inputs/outputs, vehicle wiring harnesses, PCM, shift solenoids	• Run Self-Test. Refer to Powertrain Control/Emissions Diagnosis Manual [25] for diagnosis and testing of the Powertrain Control System. Perform Pinpoint Test A using Transmission Tester. Repair as required. Clear DTCs, road test and rerun Self-Test.
325 — HYDRAULIC/MECHANICAL ROUTINE	
Improper Pressures	
• Intermediate clutch	• Check pressure at intermediate clutch tap; refer to Line Pressure Chart for specifications. If not within specifications, check main controls and pump.
Main Controls	
• 1-2 shift valve, 1-2 accumulator solenoid pressure regulator valve stuck, damaged or assembled wrong	• Inspect for damage. Repair as required.
• Bolts not tightened to specifications	• Tighten bolts to specifications.
• SSA/SS1 malfunction	• Activate solenoid using transmission tester. If solenoid operation cannot be felt when placing hand on solenoid, replace solenoid. Inspect O-rings for damage; repair as required.
• Gaskets damaged	• Inspect for damage and replace.
Pump	
• Gaskets damaged	• Inspect for damage and replace.
• Porosity/cross leaks	• Inspect for leak/porosity. Replace pump as required.
Intermediate Clutch Assembly	
• Piston damaged	• Inspect for damage. Repair as required.
• Friction elements damaged, worn	• Inspect for damage. Repair as required.
• End clearance improper	• Inspect and correct as outlined under Transmission Assembly
Intermediate One-Way Clutch	
• Damaged	• Inspect for damage. Repair as required.
Planetary One-Way Clutch	
• Not holding or damaged	• Inspect for damage. Repair as required.

Official Licensed Product Ford Motor Co.

25 Can be purchased as a separate item.

DIAGNOSIS AND TESTING (Continued)

Torque Converter Operation Concerns: No Apply

Possible Component	Reference/Action
240 — ELECTRICAL ROUTINE	
Powertrain Control System	
• Electrical inputs/outputs, vehicle wiring harnesses, PCM, torque converter clutch (TCC) solenoid, TFT sensor, OSS	• Run Self-Test. Refer to Powertrain Control/Emissions Diagnosis Manual [26] for diagnosis and testing of the Powertrain Control System. Perform Pinpoint Tests B and F using Transmission Tester. Repair as required. Clear codes, road test and rerun Self-Test.
340 — HYDRAULIC/MECHANICAL ROUTINE	
Shift Linkage	
• Damaged, misadjusted	• Inspect and repair as required. Verify transmission shift cable adjustment; refer to Section 307-05. Adjust transmission shift cable as necessary. After repairing transmission shift cable, verify that the digital TR sensor is properly adjusted; refer to the the Digital Transmission Range (TR) Sensor—Adjustment in this section. Adjust the digital TR sensor as necessary.
Improper Pressures	
• Low line pressure, low EPC pressure	• Check pressure at line and EPC taps; refer to Line Pressure Chart for specifications. If pressure is low, check EPC and main regulator valve. If within specifications, check the main controls.
Main Controls	
• Solenoid pressure regulator valve, manual valve, bypass clutch control valve and plunger, converter pressure limit valve, drain back valve stuck, damaged or assembled incorrectly	• Inspect for damage. Repair as required.
• Bolts not tightened to specifications	• Tighten bolts to specifications.
• Solenoid screen (in valve body) blocked or damaged	• Clean or replace screen.
• TCC solenoid malfunction	• Activate solenoid using transmission tester. If solenoid operation cannot be felt when placing hand on solenoid, replace solenoid. Inspect O-rings for damage. Repair as required.
• Gaskets damaged	• Inspect for damage and replace.
Pump Assembly	
• Bolts not tightened to specifications	• Tighten bolts to specifications.
• Porosity/cross leaks, balls leaking	• Inspect for porosity/leaks, ball missing. Replace pump as required.
• Gaskets damaged	• Inspect for damage and replace.
Input Shaft	
• Seals damaged	• Inspect for damage. Repair as necessary.
Torque Converter Assembly	
• Leakage, friction material damaged, internal seals damaged	• Inspect torque converter. Repair or replace as required.

Official Licensed Product Ford Motor Company

26 Can be purchased as a separate item.

DIAGNOSIS AND TESTING (Continued)

Torque Converter Operation Concerns: Always Applied/Stalls Vehicle

Possible Component	Reference/Action
241 — ELECTRICAL ROUTINE	
Powertrain Control System	
• Electrical inputs/outputs, vehicle wiring harnesses, PCM, torque converter clutch (TCC) solenoid, TFT sensor	• Run Self-Test. Refer to Powertrain Control/Emissions Diagnosis Manual [27] for diagnosis and testing of the Powertrain Control System. Perform Pinpoint Tests B and A using Transmission Tester. Repair as required. Clear DTCs, road test and rerun Self-Test.
341 — HYDRAULIC/MECHANICAL ROUTINE	
Main Control	
• Drain back valve, torque converter clutch (TCC) and plunger stuck, damaged or assembled incorrectly	• Inspect for damage. Repair as required.
• Bolts not tightened to specifications	• Tighten bolts to specification.
• TCC solenoid malfunction	• Activate solenoid using transmission tester. If solenoid operation cannot be felt when placing hand on solenoid, replace solenoid. Inspect O-rings for damage. Repair as required.
• No. 7 ball improper seating	• Inspect for damage. Repair as required.
• Gaskets damaged	• Inspect for damage and replace.
Pump Assembly	
• Bolts not tightened to specification	• Tighten bolts to specifications.
• Ball missing, leaking, porosity/cross leaks	• Inspect for porosity/leaks, balls missing. Replace pump as required.
• Gaskets damaged	• Inspect for damage and replace.
Input Shaft	
• Seals damaged	• Inspect for damage. Repair as required.
Torque Converter Assembly	
• No end clearance	• Inspect converter as outlined and replace as required.
• Piston plate damaged or stuck to cover	• If cover is heat-stained, replace converter.

Official Licensed Product
Ford Motor Company

Torque Converter Operation Concerns: Cycling/Shudder/Chatter

Possible Component	Reference/Action
242 — ELECTRICAL ROUTINE	
Powertrain Control System	
• Electrical inputs/outputs, vehicle wiring harnesses, PCM, torque converter clutch (TCC) solenoid, OSS	• Run Self-Test. Refer to Powertrain Control/Emissions Diagnosis Manual [27] for diagnosis and testing of the Powertrain Control System. Perform Pinpoint Test F using Transmission Tester. Repair as required. Clear DTCs, road test and rerun Self-Test.
342 — HYDRAULIC/MECHANICAL ROUTINE	
Fluid Condition	
	• Inspect fluid condition. If burnt, drain fluid and converter. Replace fluid and filter assembly. Bring vehicle to normal operating temperature. Perform Transmission Drive Cycle Test. Perform Transmission Self-Test. If condition still exists, continue diagnostics.

(Continued)

27 Can be purchased as a separate item.

DIAGNOSIS AND TESTING (Continued)

Torque Converter Operation Concerns: Cycling/Shudder/Chatter

Possible Component	Reference/Action
Main Controls	
• Solenoid pressure regulator valve, No. 7 check ball, bypass clutch control valve and plunger, converter pressure limit valve stuck, damaged or assembled incorrectly	• Inspect for damage. Repair as required.
• Bolts not tightened to specifications	• Tighten bolts to specifications.
• Solenoid screen (in valve body) blocked or damaged	• Clean or replace screen.
• TCC solenoid malfunction	• Activate solenoid using transmission tester. If solenoid operation cannot be felt when placing hand on solenoid, replace solenoid. Inspect O-rings for damage. Repair as required.
• Gaskets damaged	• Inspect for damage and replace.
Pump Assembly	
• Bolts not tightened to specification	• Tighten bolts to specification.
• Porosity/cross leaks, missing balls or leaking	• Inspect for porosity/leaks or missing balls. Replace pump as required.
• Gaskets damaged	• Inspect for damage and replace.
Input Shaft	
• Seals damaged	• Inspect for damage. Repair as required.
Torque Converter	
• Excessive end clearance	• Inspect converter. Replace as required.

Official Licensed Product Ford Motor Company

Other Concerns: No Engine Braking In 2nd Gear, Manual 2nd Or Manual 1st Position

Possible Component	Reference/Action
250 — ELECTRICAL ROUTINE	
• No Electrical Concerns	
350 — HYDRAULIC/MECHANICAL ROUTINE	
Shift Linkage	
• Damaged or misadjusted	• Inspect and repair as required. Verify transmission shift cable adjustment; refer to Section 307-05. Adjust transmission shift cable as necessary. After repairing transmission shift cable, verify that the digital TR sensor is properly adjusted; refer to the the Digital Transmission Range (TR) Sensor—Adjustment in this section. Adjust the digital TR sensor as necessary.
Main Controls	
• 3-4 shift valve, 1-2 and 2-3 shift valve, gaskets, 3-4 capacity modulator valve, stuck or damaged or assembled incorrectly	• Inspect for damage. Repair as required.
• OD servo assembly damaged or stuck	• Inspect cover, piston and seal for damage. Repair as required.
Overdrive	
• Reverse band, manual 1st (only) damaged	• Inspect for damage. Repair as required.
• OD band, reverse clutch drum assembly worn or damaged	• Inspect for damage. Repair as required.
• Intermediate one-way assembly damaged	• Inspect for damage. Repair as required.
Reverse Band (Manual 1st Only)	
• Damaged or misadjusted	• Inspect for damage. Repair as required.

DIAGNOSIS AND TESTING (Continued)

Other Concerns: Shift Lever Efforts High

Possible Component	Reference/Action
251 — ELECTRICAL ROUTINE	
• No Electrical Concerns	
351 — HYDRAULIC/MECHANICAL ROUTINE	
Shift Linkage, Digital TR Sensor	
• Damaged or misadjusted	• Inspect and repair as required. Verify transmission shift cable adjustment; refer to Section 307-05. Adjust transmission shift cable as necessary. After repairing transmission shift cable, verify that the digital TR sensor is properly adjusted; refer to the the Digital Transmission Range (TR) Sensor—Adjustment in this section. Adjust the digital TR sensor as necessary.
Manual Lever	
• Retaining pin damaged, nut loose, detent spring bent or damaged or Park mechanism damaged	• Inspect for damage. Repair as required.
Main Controls	
• Manual valve stuck or damaged • Bolts not tightened to specifications	• Inspect for damage. Repair as required. • Tighten bolts to specifications.

Other Concerns: External Leaks

Possible Component	Reference/Action
252 — ELECTRICAL ROUTINE	
Powertrain Control System	
• Electrical inputs/outputs, sensor seals leaking (digital TR, OSS, vehicle speed sensor [VSS] or transmission connector)	• Inspect for leakage and repair as required.
352 — HYDRAULIC/MECHANICAL ROUTINE	
Seals, Gaskets	
• Converter, pump, pan, extension housing gasket/seal, manual lever, fluid level indicator tube	• Locate source of leak. Repair as required.
Other	
• Cooler fitting, pressure taps, converter drain plug, band anchor pins, cooler lines, case porosity, case cracked • Vent blocked or damaged	• Locate source of leak. Repair as required. • Check vent for damage or blockage. Repair as required.

Official Licensed Product Ford Motor Company

DIAGNOSIS AND TESTING (Continued)

Other Concerns: Poor Vehicle Performance

Possible Component	Reference/Action
253 — ELECTRICAL ROUTINE	
Powertrain Control System	
• Electrical inputs/outputs, vehicle wiring harnesses, shift solenoids, digital TR sensor, torque converter clutch (TCC) solenoid, transmission fluid temperature (TFT) sensor	• Run Self-Test. Refer to Powertrain Control/Emissions Diagnosis Manual [28] for diagnosis and testing of the Powertrain Control System. Perform Pinpoint Tests A, B and D using Transmission Tester. Repair as required. Clear codes, road test and rerun Self-Test. Also refer to Routines 241/341 Torque Converter Operation Concern: Always Applied.
353 — HYDRAULIC/MECHANICAL ROUTINE	
Shift Linkage, Digital TR Sensor	
• Damaged or misadjusted	• Inspect and repair as required. Verify transmission shift cable adjustment; refer to Section 307-05. Adjust transmission shift cable as necessary. After repairing transmission shift cable, verify that the digital TR sensor is properly adjusted; refer to the the Digital Transmission Range (TR) Sensor—Adjustment in this section. Adjust the digital TR sensor as necessary.
Verify Proper Shift Scheduling and Engagements	
• See Reference/Action	• Go to the appropriate diagnostic routines.
Torque Converter Clutch Always Applied	
• See Reference/Action	• Go to Hydraulic/Mechanical Routine 241/341.
Torque Converter Clutch	
• Damaged	• Inspect torque converter. Replace as outlined.

Official Licensed Product
Ford Motor Company

Other Concerns: Noise/Vibration — Forward Or Reverse

Possible Component	Reference/Action
254 — ELECTRICAL ROUTINE	
• No Electrical Concerns	
354 — HYDRAULIC/MECHANICAL ROUTINE	
For Noises/Vibrations That Change With Engine Speed	
• Converter components • Fluid level (low) pump cavitation • Pump assembly • Engine drive accessories • Cooler lines grounding out • Flywheel	• Locate source of disturbance. Repair as required.
For Noises/Vibrations That Change With Vehicle Speed:	
• Engine mounts loose or damaged • Driveline concerns: — U-joints — Rear axle — Suspension — Modifications 1st Gear: — Low one-way clutch — Gearset — Friction elements	• Locate source of disturbance and repair as required. • Refer to the following shift routine(s) for further diagnosis: Shift 1-2, Routine 320. Shift 2-3, Routine 321. Shift 3-4, Routine 322. Shift 4-3, Routine 323. Shift 3-2, Routine 324. Shift 2-1, Routine 325. Torque Converter Cycling 242/342.

(Continued)

28 Can be purchased as a separate item.

DIAGNOSIS AND TESTING (Continued)

Other Concerns: Noise/Vibration — Forward Or Reverse

Possible Component	Reference/Action
• 2nd Gear: — Intermediate one-way clutch — Intermediate clutch piston bleed hole out of 12 o'clock position — Friction elements • 3rd Gear: — Torque converter — Anti-clunk spring — Friction elements • 4th Gear: — Gear set — Friction elements — Torque converter • Reverse: — Gear set — Friction elements • Output shaft splines worn or damaged	
Other Noises/Vibrations:	
• Main controls, valve resonance • Shift cable: — Vibration — Grounding — Cooler lines — Grounding	• Locate source of disturbance and repair as required.

Official Licensed Product Ford Motor Company

Other Concerns: Engine Will Not Crank

Possible Component	Reference/Action
255 — ELECTRICAL ROUTINE	
Powertrain Control System	
• Electrical inputs/outputs, vehicle wiring harnesses, engine starting system hardware, digital TR sensor	• Run Self-Test. Refer to the Powertrain Control/Emissions Diagnosis Manual [29] for diagnosis and testing of the Powertrain Control System. Perform Pinpoint Test D using Transmission Tester. Repair and adjust as required.
355 — HYDRAULIC/MECHANICAL ROUTINE	
Shift Linkage, Digital TR Sensor	
• Damaged or misadjusted	• Inspect and repair as required. Verify transmission shift cable adjustment; refer to Section 307-05. Adjust transmission shift cable as necessary. After repairing transmission shift cable, verify that the digital TR sensor is properly adjusted; refer to the the Digital Transmission Range (TR) Sensor—Adjustment in this section. Adjust the digital TR sensor as necessary.

29 Can be purchased as a separate item.

DIAGNOSIS AND TESTING (Continued)

Other Concerns: No Park (P) Range

Possible Component	Reference/Action
256 — ELECTRICAL ROUTINE	
• No Electrical Concerns	
356 — HYDRAULIC/MECHANICAL ROUTINE	
Shift Linkage, Digital TR Sensor	
• Damaged or misadjusted	• Inspect and repair as required. Verify transmission shift cable adjustment; refer to Section 307-05. Adjust transmission shift cable as necessary. After repairing transmission shift cable, verify that the digital TR sensor is properly adjusted; refer to the the Digital Transmission Range (TR) Sensor—Adjustment in this section. Adjust the digital TR sensor as necessary.
Park Mechanism	
• Output shaft ring, parking brake pawl, parking pawl return spring, park rod guide cup, parking pawl shaft, parking pawl actuating rod, manual lever detent spring damaged or assembled incorrectly	• Inspect for damage or incorrect assembly and repair as required.

Other Concerns: Overheating

Possible Component	Reference/Action
257 — ELECTRICAL ROUTINE	
Refer to Routine 240/340, Torque Converter Operation Concern: No Apply	
357 — HYDRAULIC/MECHANICAL ROUTINE	
Fluid	
• Improper level • Condition	• Adjust fluid to proper level. • Inspect as under Fluid Condition Check; refer to Verification of Condition in this section.
Cooler Lines	
• Damaged, blocked or reversed	• Inspect for damage and proper installation. Repair as required.
Auxiliary Cooler	
• Damaged, blocked, restricted or improperly installed	• Inspect for damage and proper installation. Repair as required.
Vehicle Concerns Causing Engine Overheating	
	• Refer to Section 303-03.
Main Controls	
• Drain back valve, torque clutch control valve, converter limit valve stuck, damaged or assembled incorrectly	• Inspect for damage and repair as required.
Torque Converter	
• No apply	• Refer to Routine 240/340.

Ford Licensed Product
Ford Motor Company

IN-VEHICLE REPAIR

Transmission Fluid Drain and Refill

1. Normal maintenance requires periodic automatic transmission fluid changes. If a major service, such as a clutch, band, bearing, etc., is required, the automatic transmission fluid will also have to be removed for service. At this time, the torque converter (7902) , transmission cooler, cooler inlet tube and cooler tube must be thoroughly flushed to remove any dirt. When used under continuous or severe conditions, the transmission and torque converter should be drained and refilled with fluid as specified.
   - **Normal Maintenance**
     Change fluid at 48,279 km (30,000 miles).
   - **Severe Duty/Major Overhaul**
     Change fluid at 33,795 km (21,000 miles).

2. **CAUTION: Use of a fluid other than specified could result in transmission malfunction and/or failure.**
   Refer to the vehicle certification label affixed to the LH front door lock face panel or door pillar for the transmission code.

Official Licensed Product
Ford Motor Company

3. When filling a dry transmission and torque converter, refer to General Specifications chart in this section for capacity. Check the fluid level.

Removal

1. If equipped, turn the air suspension switch OFF.

2. Disconnect the battery ground cable (14301).

3. Raise the vehicle on a hoist; refer to Section 100-02.

4. Place a drain pan under the transmission fluid pan (7A194).

IN-VEHICLE REPAIR (Continued)

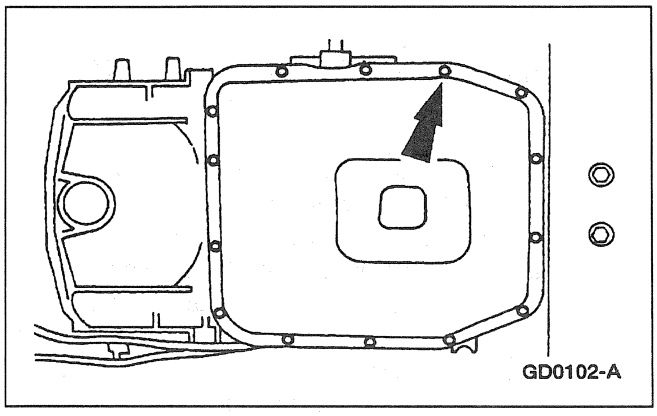

5. Drain transmission fluid.
   - Loosen the transmission fluid pan bolts and allow fluid to drain. After fluid is drained remove the bolts.

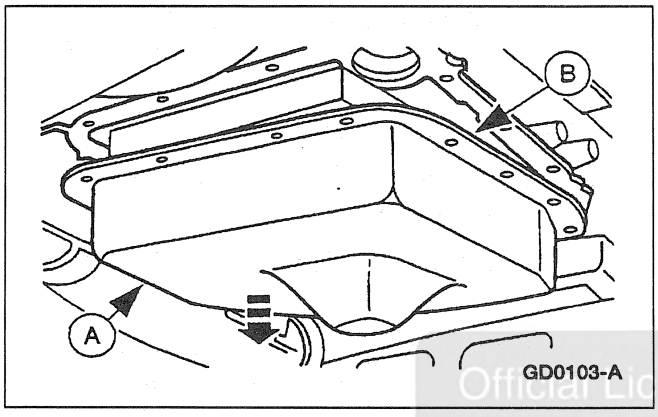

6. Remove the (A) transmission fluid pan and (B) transmission fluid pan gasket.
   - Replace transmission fluid pan gasket as necessary.

Official Licensed Product

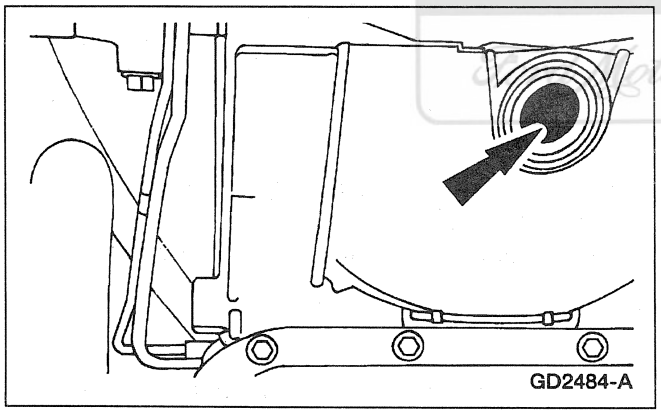

7. Remove torque converter housing plug.

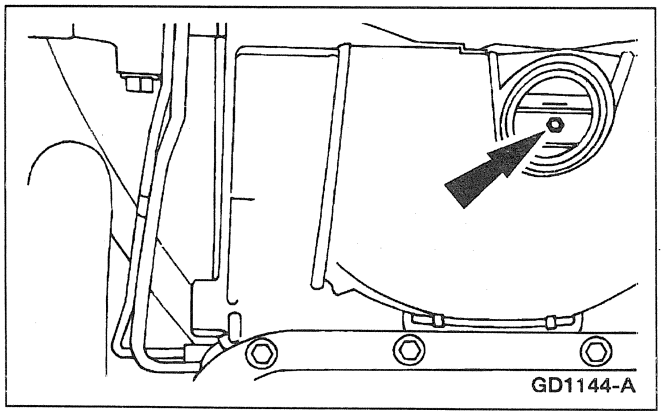

8. Remove the torque converter drain plug and drain the torque converter.
   - Rotate the crankshaft to access the drain plug.

IN-VEHICLE REPAIR (Continued)

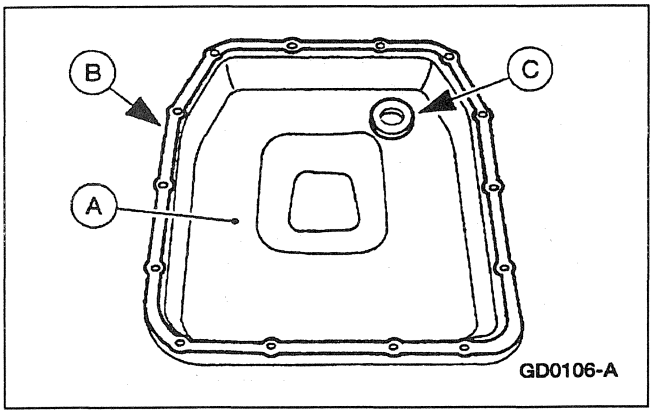

9. Clean and inspect the (A) transmission fluid pan, (B) transmission fluid pan gasket and (C) magnet.

10. Flush the fluid cooler and fluid cooler lines; refer to the Transmission Fluid Cooler—Backflushing/Cleaning in this section.

11. Flush the torque converter; refer to Torque Converter Flushing.

Installation

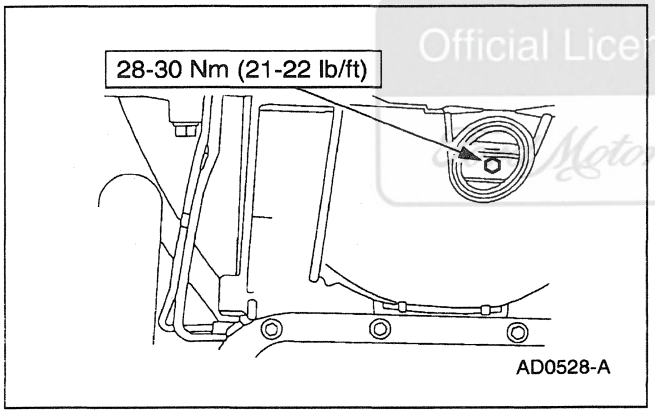

1. **NOTE:** A new torque converter drain plug must be used.

   Install the torque converter drain plug.

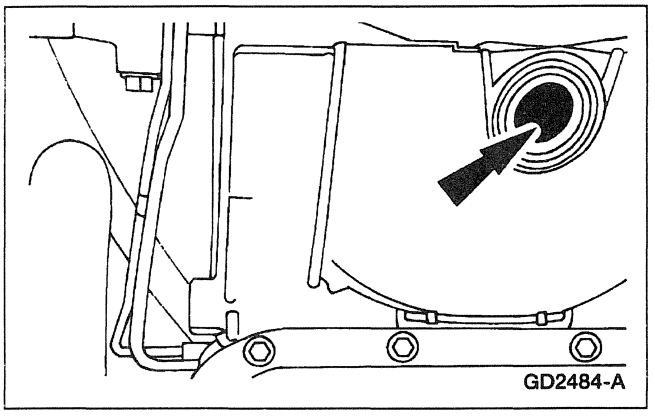

2. Install torque converter housing plug.

Official Licensed Reprint
Motor Company

IN-VEHICLE REPAIR (Continued)

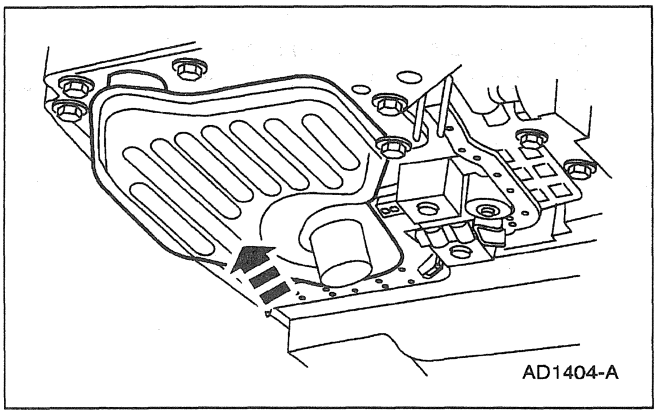

3. ⚠ **CAUTION: If installing a new filter, and the seal remains in the main control bore, carefully use a small screwdriver to remove the seal. Use care not to damage the main control bore.**

   NOTE: If transmission is being repaired for a contamination-related failure, use a new filter and seal. The filter may be reused if no excessive contamination is present.

   Replace fluid filter and seal as required.

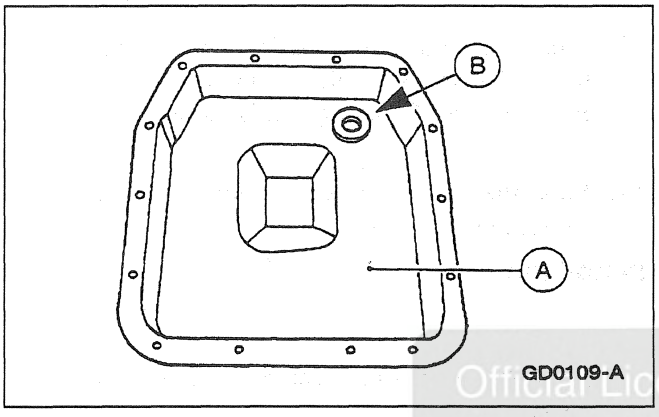

4. Position the (B) pan magnet into the (A) transmission fluid pan.

Official Licensed Product
Ford Motor Company

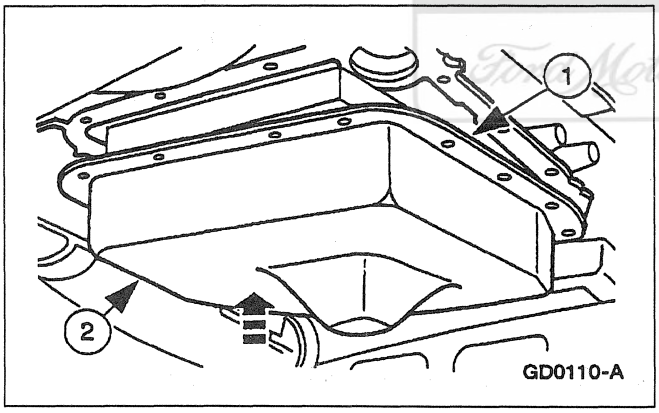

5. **NOTE:** The transmission fluid pan gasket is reusable, clean and inspect for damage; if not damaged, the gasket should be reused.

   Install the transmission fluid pan and gasket.

   1 Position transmission fluid pan gasket.

   2 Position the transmission fluid pan.

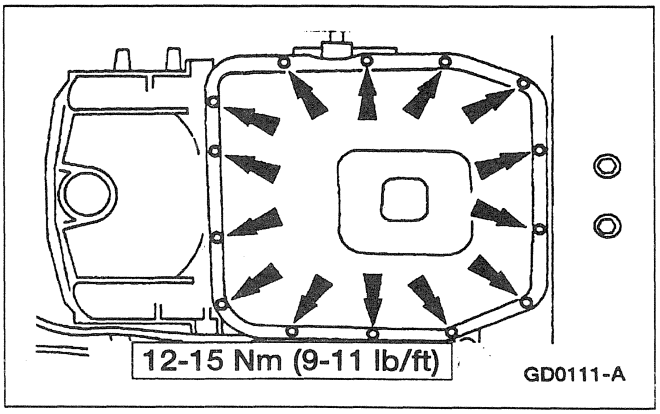

6. Install bolts.

7. Lower the vehicle.

IN-VEHICLE REPAIR (Continued)

8. Connect the battery ground cable.

9. If equipped with air suspension, reactivate the system by turning on the air suspension switch.

10. **NOTE:** When filling a dry transmission and converter start with a minimum of 4.7 liters (5 quarts).

    Fill transmission to proper fluid level.

    - Use MERCON® V Automatic Transmission Fluid XT-5-QM or equivalent fluid meeting MERCON V® specification.

Fluid Pan, Gasket and Filter

Removal

1. If equipped, turn the air suspension switch OFF.

Official Licensed Product
Ford Motor Company®

2. Disconnect the battery ground cable (14301).

3. Raise the vehicle on a hoist; refer to Section 100-02.

4. Place a drain pan under the transmission fluid pan (7A194).

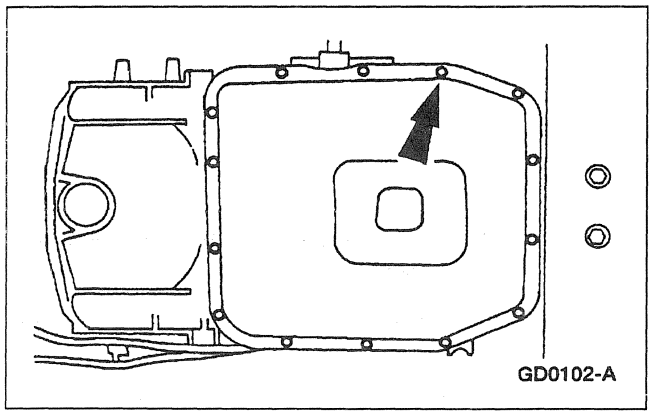

5. Drain transmission fluid.

    - Loosen the transmission fluid pan bolts and allow fluid to drain. After fluid is drained remove the bolts.

IN-VEHICLE REPAIR (Continued)

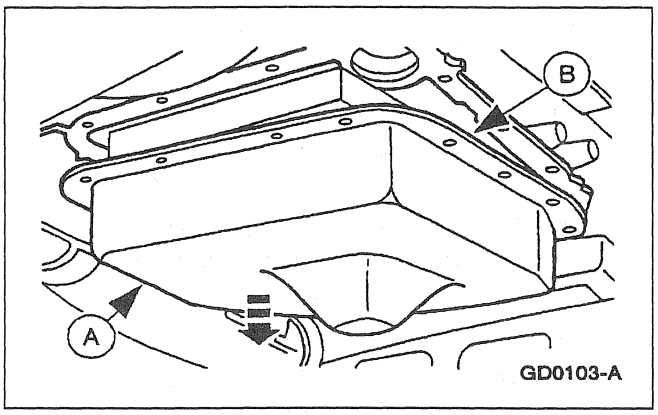

6. Remove the (A) transmission fluid pan and (B) transmission fluid pan gasket.

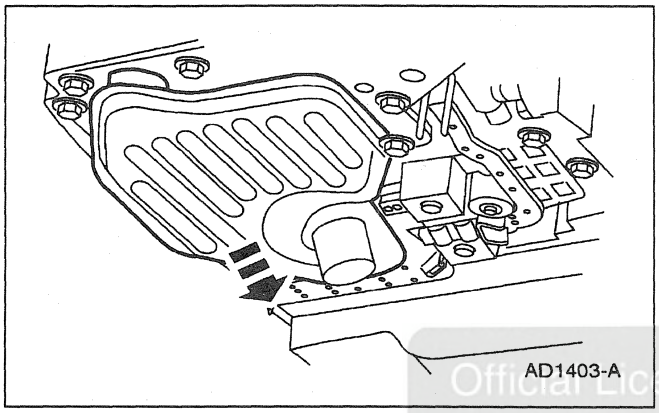

7. Pull down evenly and remove the transmission fluid filter, seal and filter kit.

Official Licensed Product

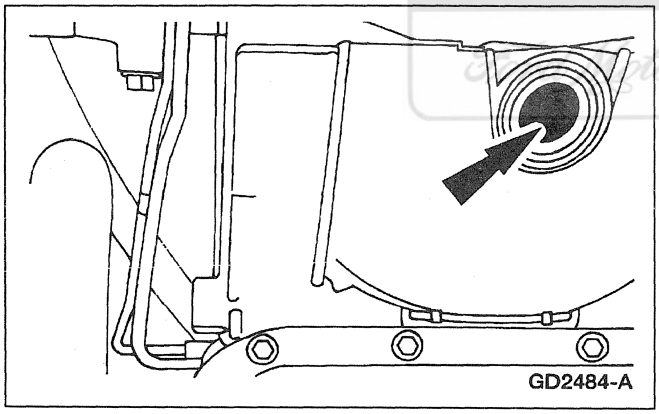

8. Remove torque converter housing plug.

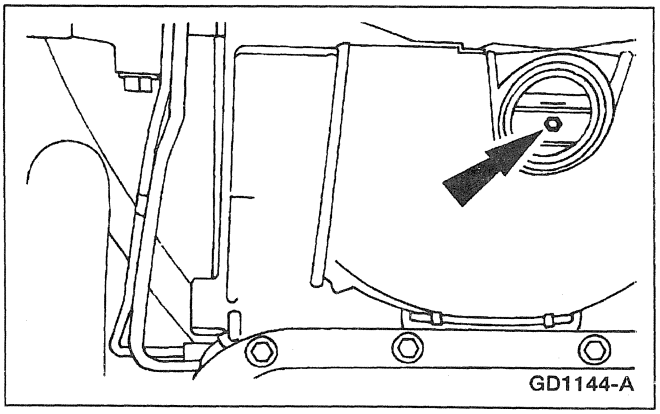

9. Remove the torque converter drain plug and drain the torque converter.
   - Rotate the crankshaft to access the drain plug.

IN-VEHICLE REPAIR (Continued)

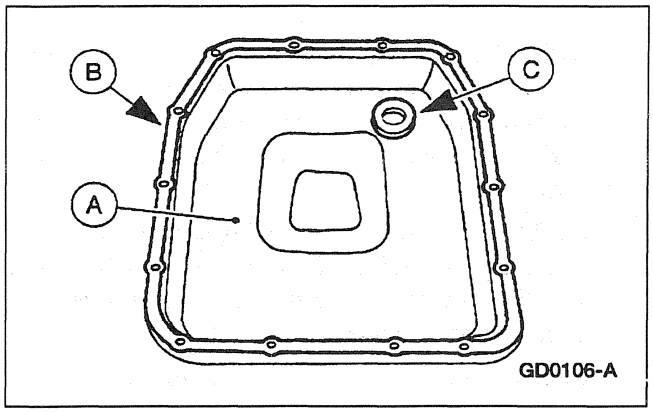

10. Clean and inspect the (A) transmission fluid pan, (B) transmission fluid pan gasket and (C) magnet.

11. Flush the fluid cooler and fluid cooler lines; refer to Transmission Fluid Cooler — Backflushing and Cleaning in this section.

12. Flush the torque converter; refer to Torque Converter Flushing in this section.

Installation

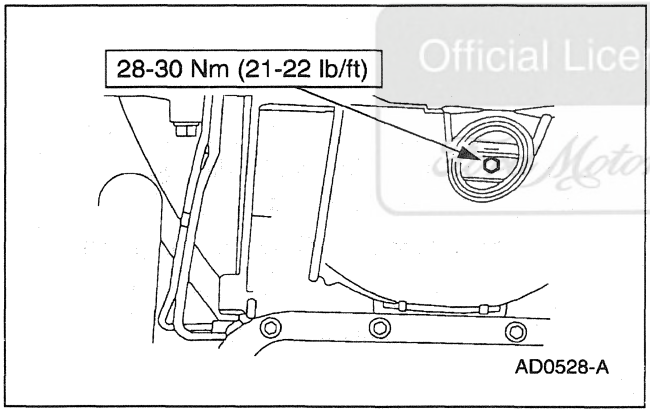

1. **NOTE:** A new torque converter drain plug must be used.
   Install the torque converter drain plug.

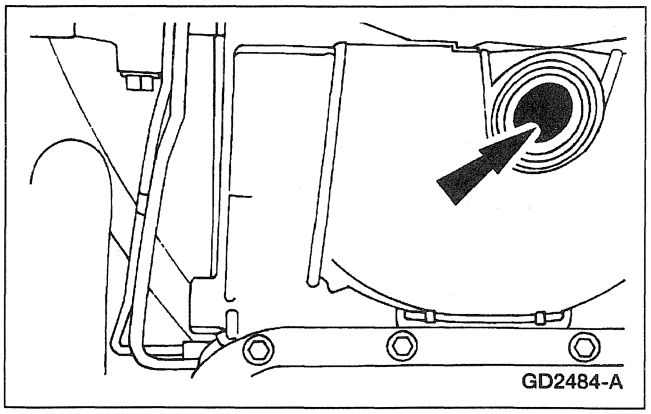

2. Install torque converter housing plug.

Official Licensed Product Motor Company

IN-VEHICLE REPAIR (Continued)

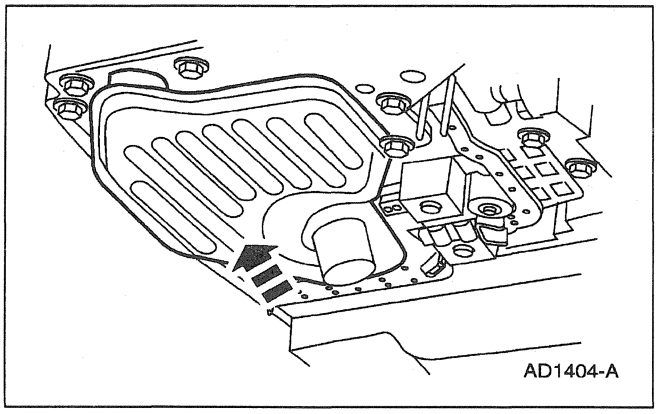

3. ⚠ CAUTION: **If installing a new filter, and the seal remains in the main control bore, carefully use a small screwdriver to remove the seal. Use care not to damage the main control bore.**

   NOTE: If transmission is being serviced for a contamination-related failure, use a new filter and seal. The filter may be reused if no excessive contamination is present.

   Replace fluid filter and seal as required.

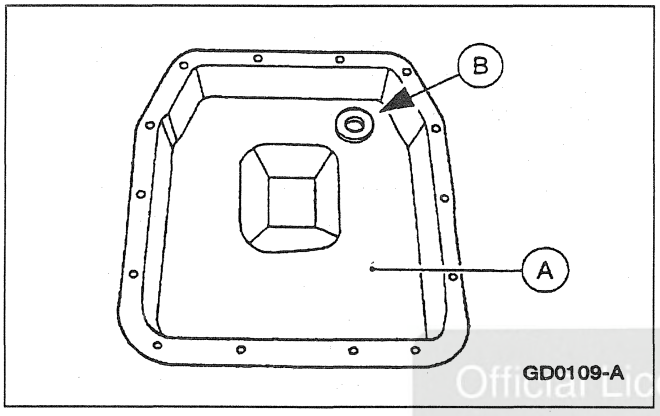

4. Position the (B) pan magnet into the (A) transmission fluid pan.

Official Licensed Product
Ford Motor Company

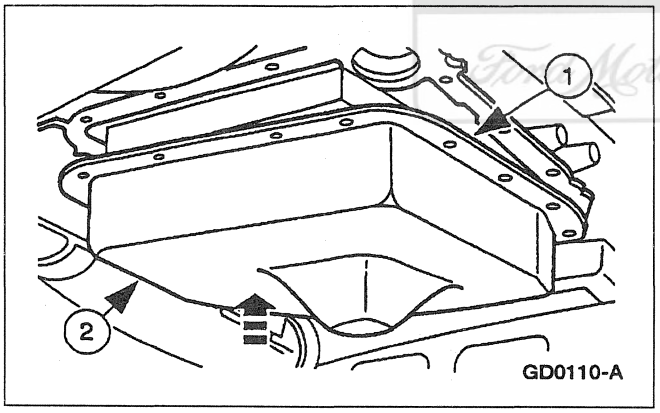

5. **NOTE:** The transmission fluid pan gasket is reusable, clean and inspect for damage; if not damaged, the gasket should be reused.

   Install the transmission fluid pan and gasket.

   1 Position transmission fluid pan gasket.

   2 Position the transmission fluid pan.

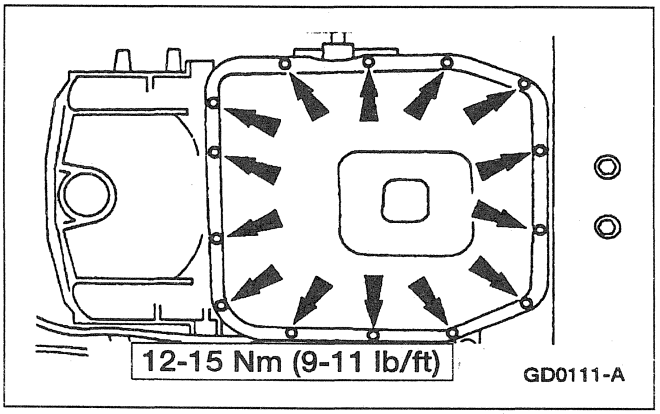

6. Install bolts.

7. Lower the vehicle.

IN-VEHICLE REPAIR (Continued)

8. Connect the battery ground cable.

9. If equipped with air suspension, reactivate the system by turning on the air suspension switch.

10. **NOTE:** When filling a dry transmission and converter start with a minimum of 4.7 liters (5 quarts).

    Fill transmission to proper fluid level.

    - Use MERCON® V Automatic Transmission Fluid XT-5-QM or equivalent meeting Ford specification MERCON® V.

Transmission Filler Tube

Removal

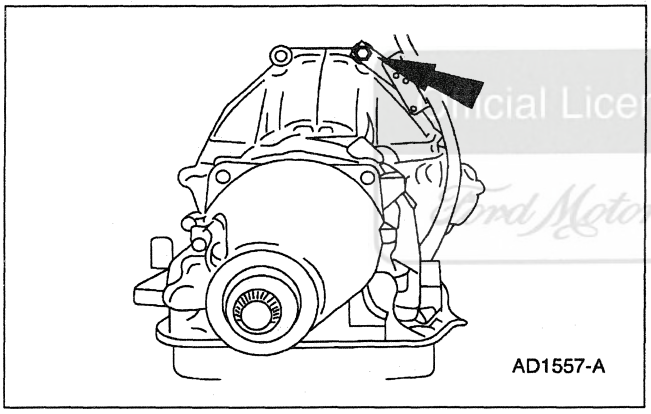

1. Remove the bolt.

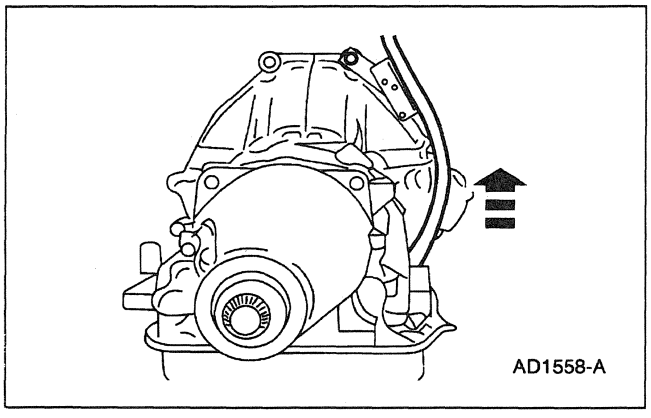

2. Remove the fluid filler tube.

Official Licensed Product
Ford Motor Company

IN-VEHICLE REPAIR (Continued)

Installation

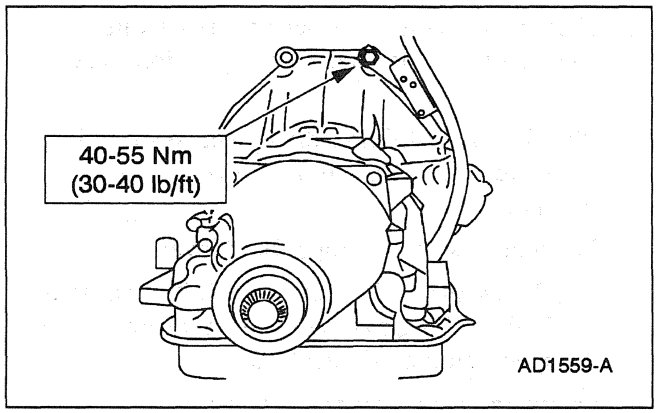

1. Follow removal procedure in reverse order.

Main Control — Valve Body

Removal

Official Licensed Product
Ford Motor Company

1. If equipped, turn the air suspension switch OFF.
2. Disconnect battery ground cable (14301).
3. Raise and support the vehicle; refer to Section 100-02.
4. Drain transmission fluid and remove the transmission fluid pan and filter; refer to Transmission Fluid Drain and Refillin this section.

IN-VEHICLE REPAIR (Continued)

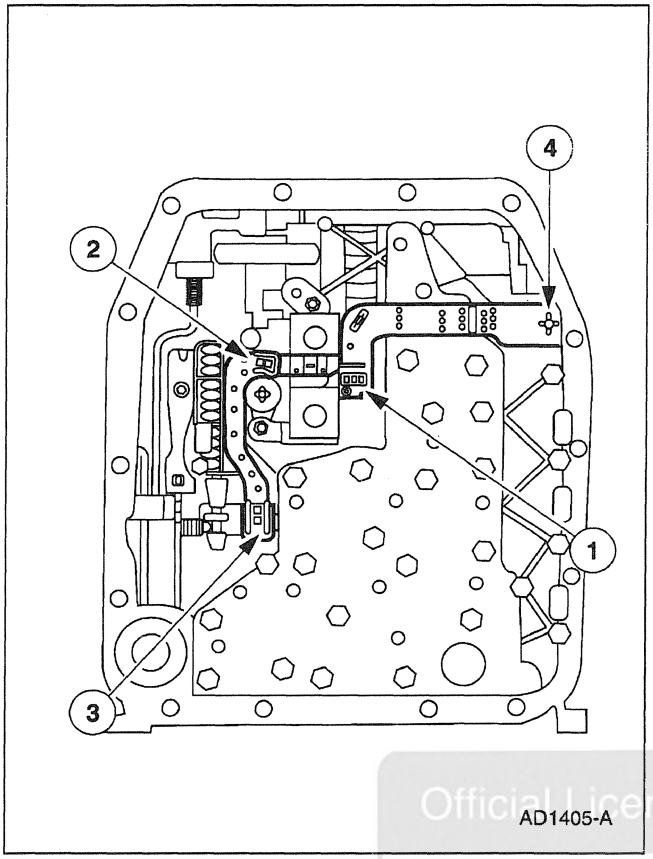

AD1405-A

5. ⚠ **CAUTION: Do not pull on the plastic lead frame. This may cause damage to the connector ends. Carefully pry up on the locking tabs to disconnect the sensors. Disconnect the molded lead frame from the sensors.**

   Disconnect the molded lead frame from the sensors.

   1 Disconnect the shift solenoid SSA/SS1 and SSB/SS2.
   2 Disconnect the torque converter clutch (TCC).
   3 Disconnect the electronic pressure control (EPC) solenoid.
   4 Disconnect the bulkhead inter connector.

Official Licensed Product
Ford Motor Company

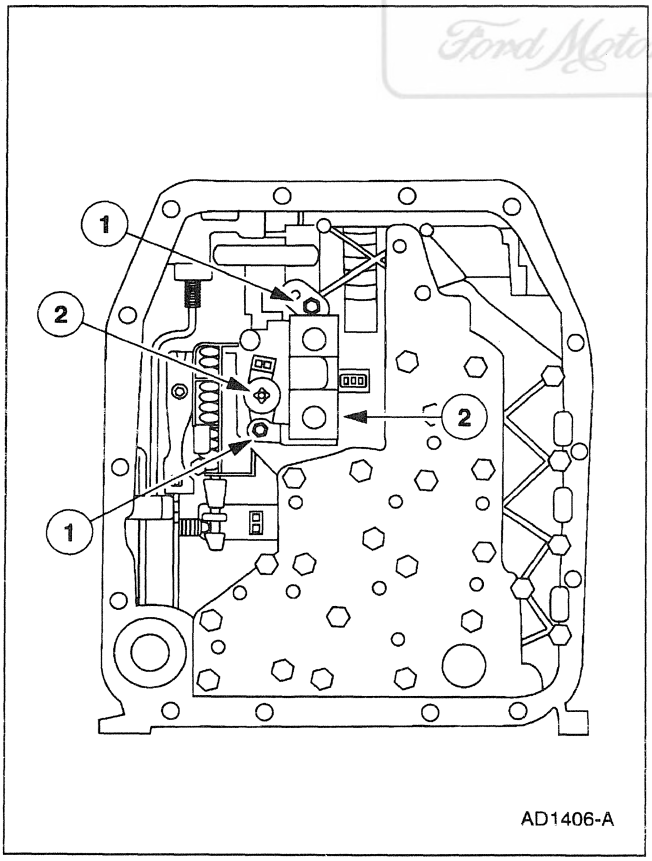

AD1406-A

6. Remove the shift solenoid and the torque converter clutch (TCC) solenoid.

   1 Remove the bolts.
   2 Remove the shift solenoid and the torque converter clutch (TCC) solenoid.

IN-VEHICLE REPAIR (Continued)

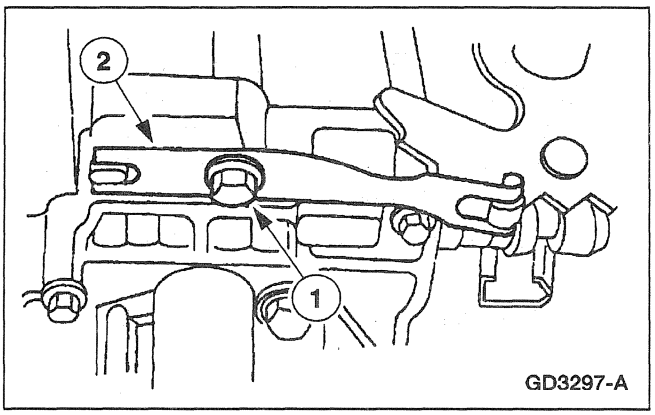

7. Remove the manual control valve detent lever spring (7A261).
   1 Remove the bolt.
   2 Remove the manual control valve detent lever spring.

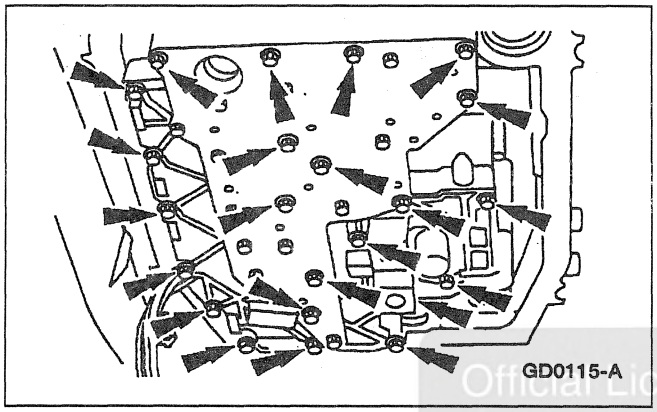

8. Remove the 23 valve body to case bolts.

Official Licensed Product
Ford Motor Company

9. Remove the main control valve body (7A100).

Installation

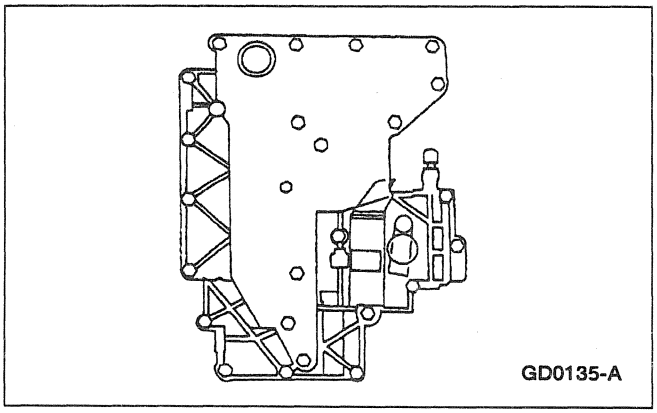

1. **NOTE:** Make sure that the drive pin of the manual valve detent lever assembly engages the manual valve in the proper location prior to installing the bolts.

   Position the main control valve body gasket and main control valve body using the two alignment bolts as a guide.

IN-VEHICLE REPAIR (Continued)

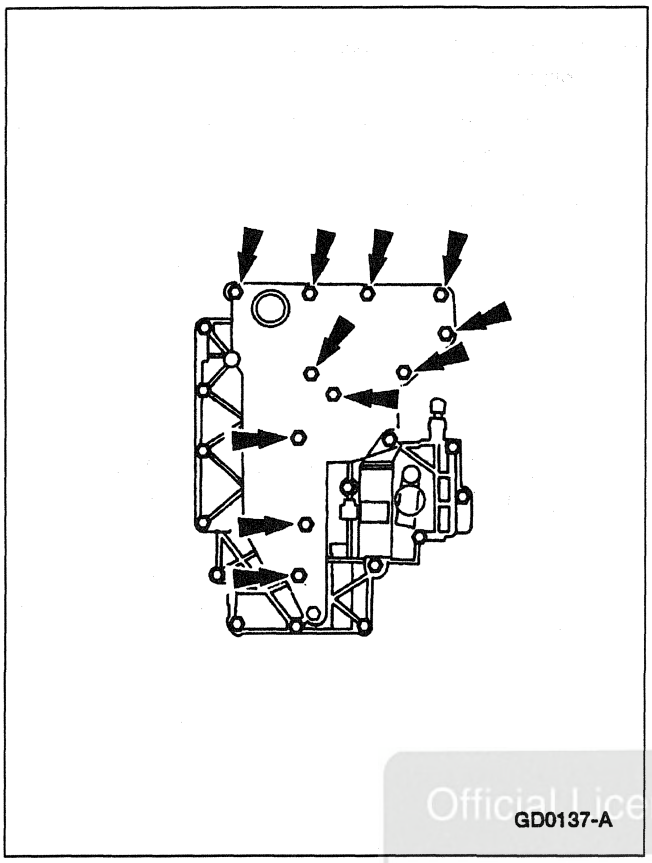
GD0137-A

2. **NOTE:** The main control valve body bolts will be tightened in later steps.
   Loosely install the bolts.

Official Licensed Product
Ford Motor Company

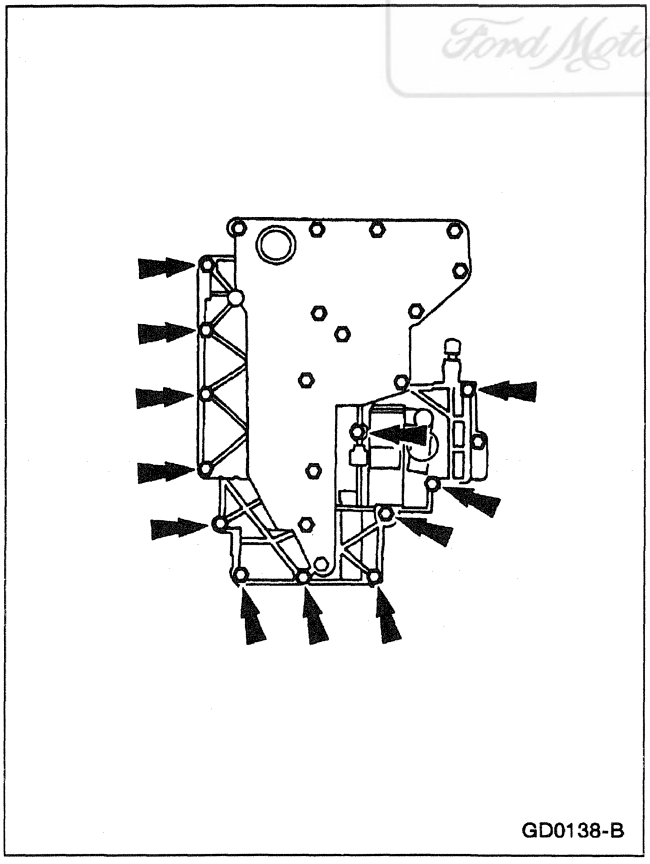
GD0138-B

3. **NOTE:** The main control valve body bolts will be tightened in later steps.
   Loosely install the bolts.

IN-VEHICLE REPAIR (Continued)

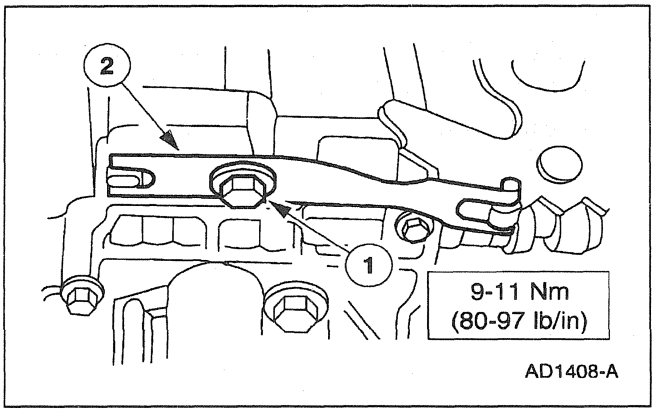

4. Install the manual control valve detent lever spring.
   1 Position the manual control valve detent lever spring.
   2 Install the bolt.

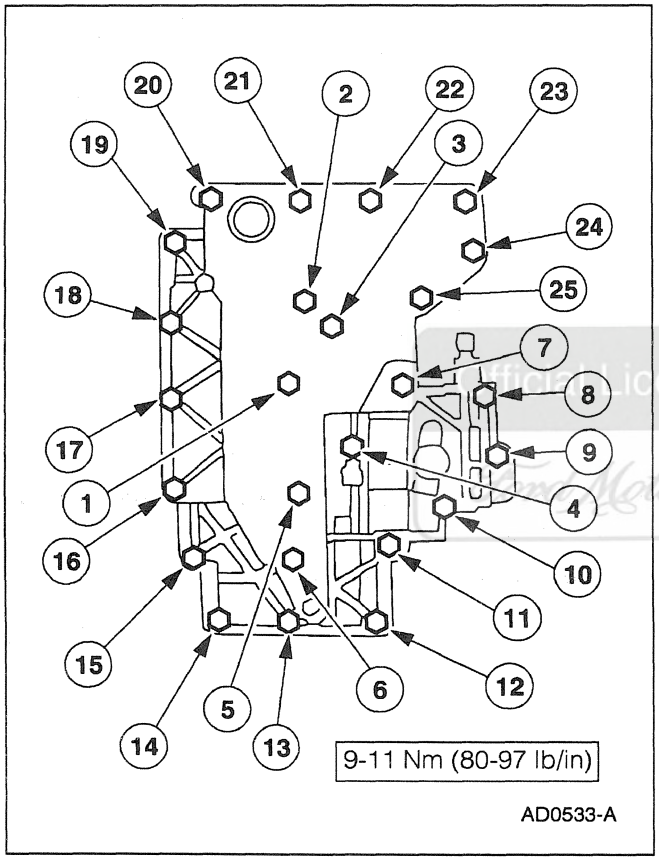

5. Tighten the main control valve body bolts in the sequence shown.

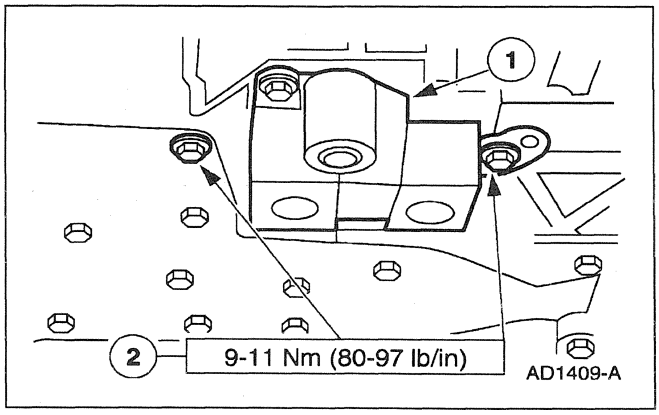

6. Install the shift solenoid and the torque converter clutch (TCC) solenoid.
   1 Install the shift solenoid and the torque converter clutch (TCC) solenoid.
   2 Install the bolts.

Official Licensed Product
Ford Motor Company

IN-VEHICLE REPAIR (Continued)

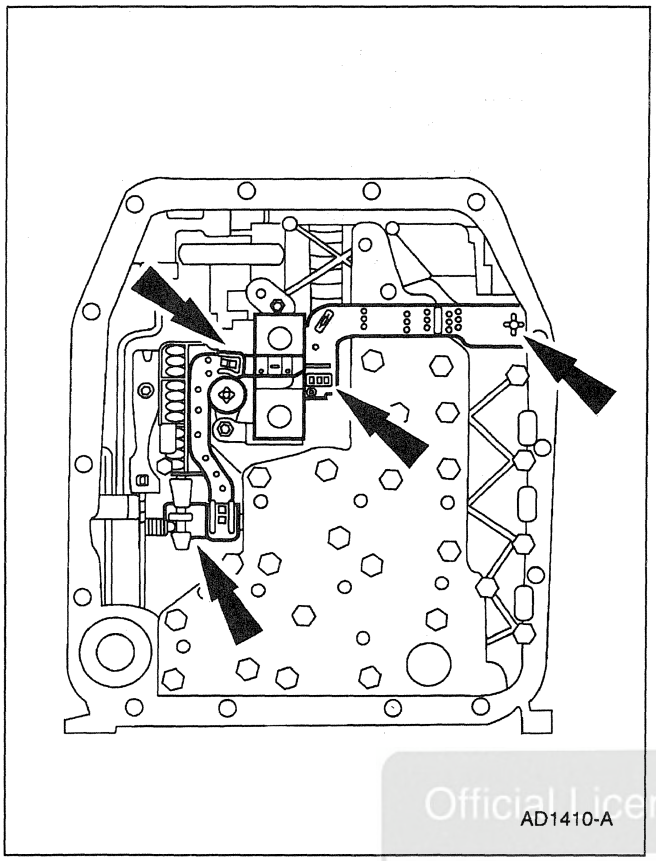

7. Connect the molded lead frame to the sensors.
   - Connect the bulkhead inter connector.
   - Connect the electronic pressure control (EPC) solenoid.
   - Connect the torque converter clutch (TCC).
   - Connect the shift solenoid SSA/SS1 and SSB/SS2.

Official Licensed Product
Ford Motor Company

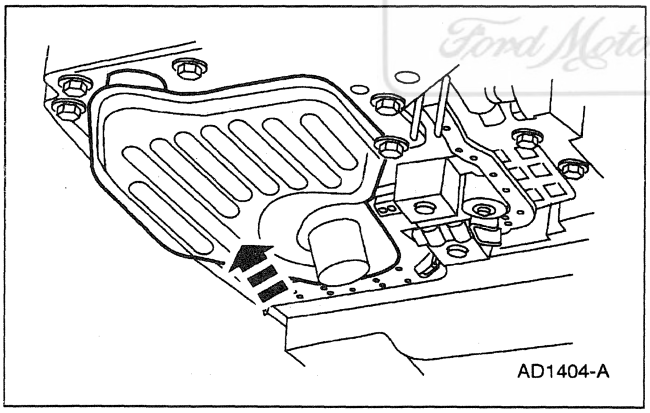

8. **⚠ CAUTION: If installing a new filter, and the grommet remains in the main control bore, carefully use a small screwdriver to remove the grommet. Use care not to damage the main control bore.**

   NOTE: If transmission is being serviced for a contamination-related failure, use a new filter and seal.

   Replace fluid filter and seal as required.

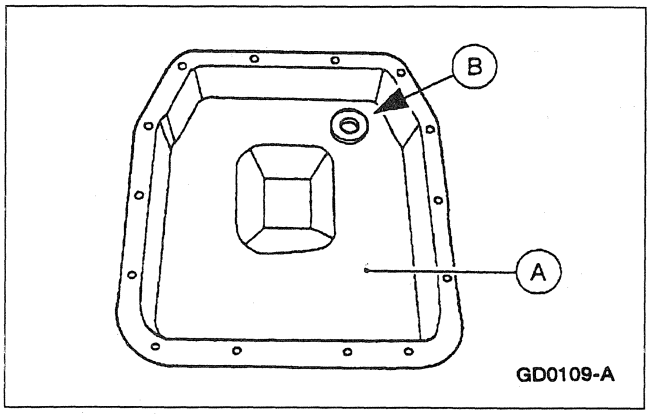

9. Position the (B) pan magnet into the (A) transmission fluid pan (7A194).

IN-VEHICLE REPAIR (Continued)

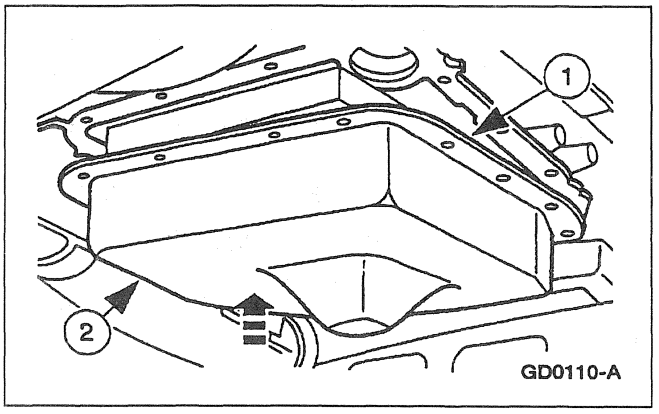

10. NOTE: The pan gasket is reusable, clean and inspect for damage; if not damaged, the gasket should be reused.

    Install the transmission fluid pan.

    1 Position the transmission fluid pan gasket.

    2 Position the transmission fluid pan.

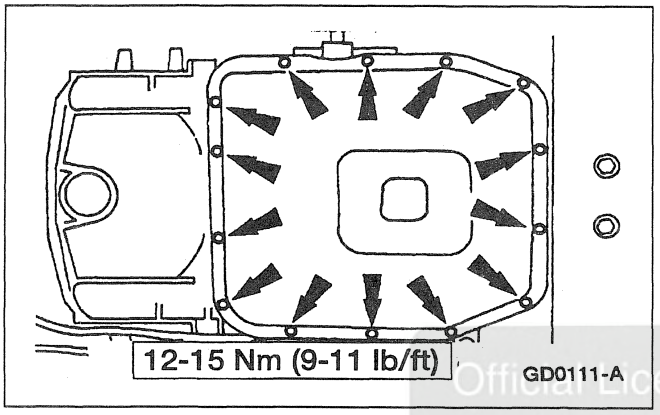

11. Install the bolts.

Official Licensed Product
Ford Motor Company

12. Lower the vehicle.

13. Connect the battery ground cable.

14. If equipped with air suspension, reactivate the system by turning on the air suspension switch.

15. Fill the transmission with fluid and check for proper operation.

Vehicle Speed Sensor (VSS)

Removal

1. If equipped, turn the air suspension switch OFF.

2. Disconnect the battery ground cable (14301).

3. Raise and support the vehicle; refer to Section 100-02.

IN-VEHICLE REPAIR (Continued)

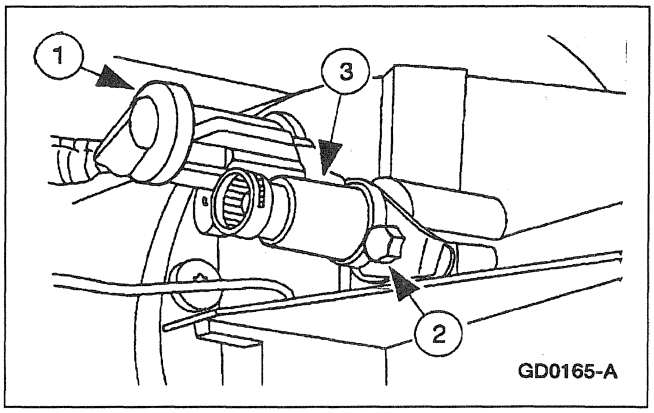

4. Remove the vehicle speed sensor (VSS)(9E731).
   1 Disconnect the electrical connector.
   2 Remove the bolt.
   3 Remove the VSS.

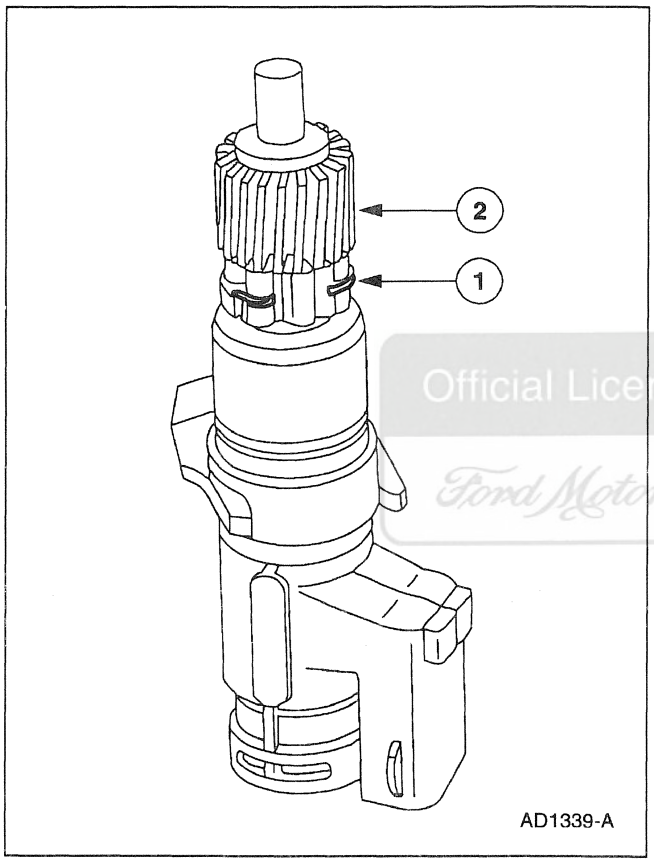

5. Remove the vehicle speed sensor (VSS) drive gear.
   1 Remove the retaining clip.
   2 Remove the driven gear.

Official Licensed Product
Ford Motor Company

IN-VEHICLE REPAIR (Continued)

Installation

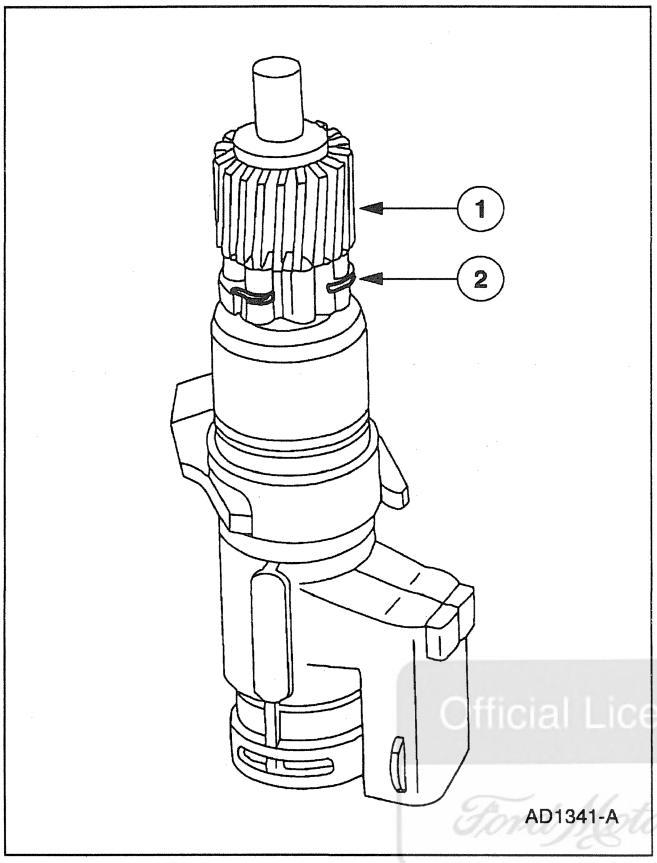

1. Install vehicle speed sensor (VSS) drive gear.
   1 Install the driven gear.
   2 Install the retaining clip.

Official Licensed Product
Ford Motor Company

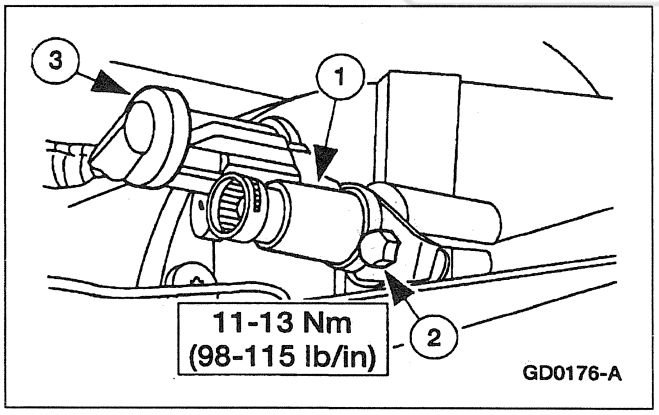

2. Install the VSS.
   1 Install the VSS.
   2 Install the bolt.
   3 Connect the electrical connector.

3. Lower the vehicle.

4. Connect the battery ground cable.

5. If equipped with air suspension, reactivate the system by turning on the air suspension switch.

IN-VEHICLE REPAIR (Continued)

Extension Housing Seal and Gasket

Special Tool(s)

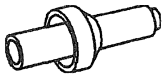 ST1188-A	Extension Housing Seal Replacer 307-013 (T61L-7657-B)
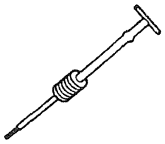 ST1185-A	Impact Slide Hammer 100-001 (T50T-100-A)
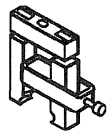 ST1192-A	Seal Remover 307-048 (T74P-77248-A)

Official Licensed Product
Ford Motor Company

Removal

1. If equipped, turn the air suspension switch off.
2. Disconnect the battery ground cable (14301).
3. Raise the vehicle on a hoist; refer to Section 100-02.
4. Drain the transmission fluid; refer to Transmission Fluid Drain and Refill in this section.

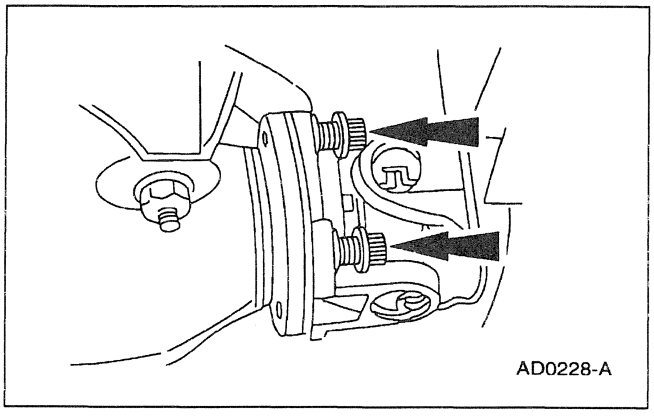
AD0228-A

5. **NOTE:** To maintain the initial driveshaft balance, mark the rear driveshaft yoke and the axle flange so they may be installed in their original positions.

   Position the rear driveshaft (4602) aside.

   1 Remove the four bolts.
   2 Remove the nuts.
   3 Remove the bolts.
   4 Disconnect the driveshaft from the transmission and position aside.

IN-VEHICLE REPAIR (Continued)

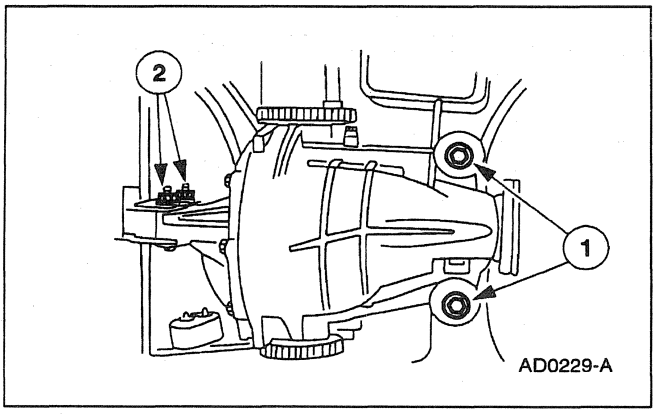

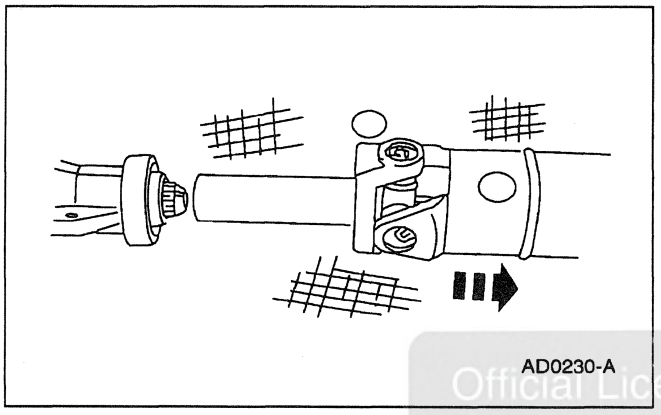

Official Licensed Product
Ford Motor Company

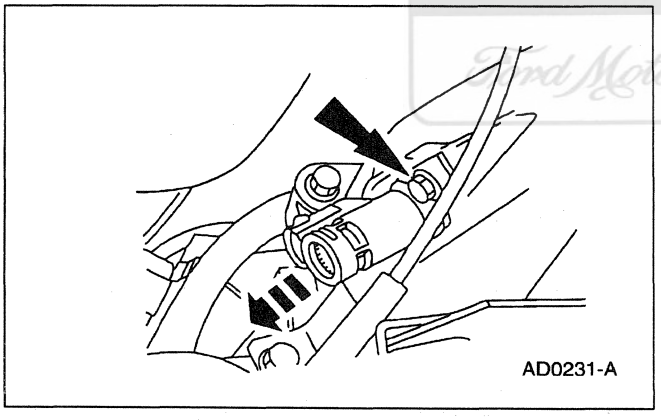

6. Remove the vehicle speed sensor (VSS)(9E731).
   1 Disconnect the electrical connector.
   2 Remove the bolt.
   3 Remove the VSS.

7. Use a Hi-Lift Jack to support the transmission.

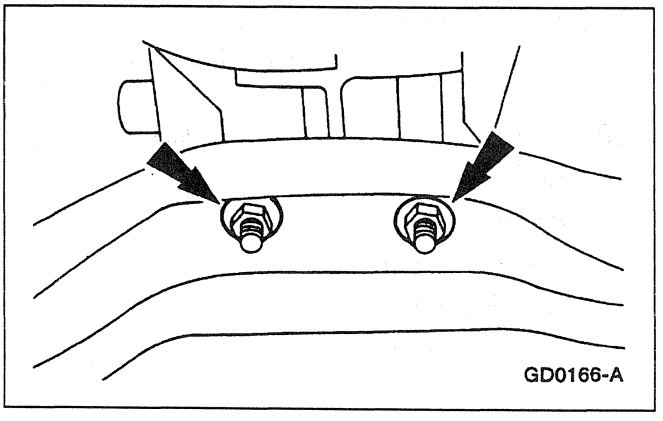

8. Remove the nuts.

IN-VEHICLE REPAIR (Continued)

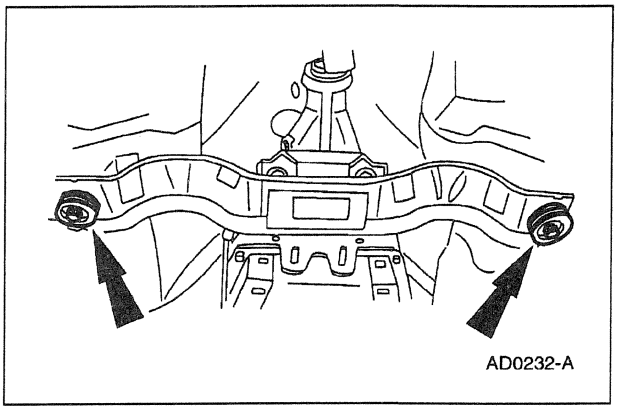

9. Remove the transmission crossmember.
   - Remove the bolts.
   - Remove the transmission crossmember.

10. Lower the transmission to access the extension housing bolts.

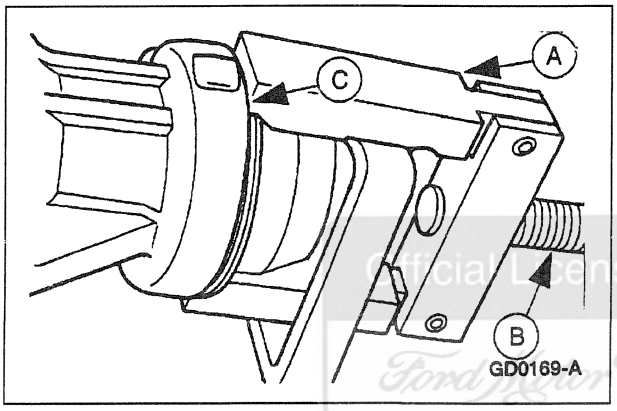

11. Use the (A) Seal Remover and the (B) Impact Slide Hammer to remove the (C) extension housing seal.

Official Licensed Product
Ford Motor Company

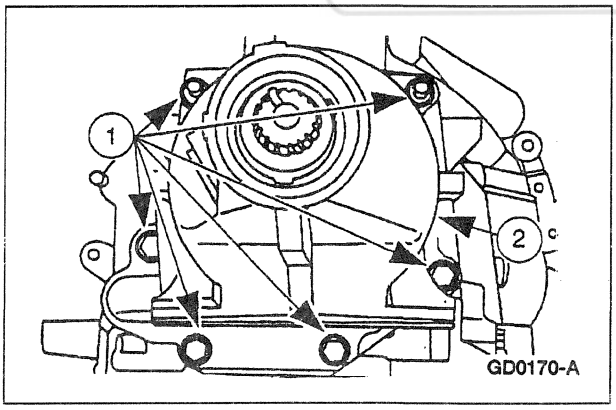

12. Remove the extension housing and gasket.
    1 Remove the bolts and the nuts.
    2 Remove the extension housing and gasket.

IN-VEHICLE REPAIR (Continued)

Installation

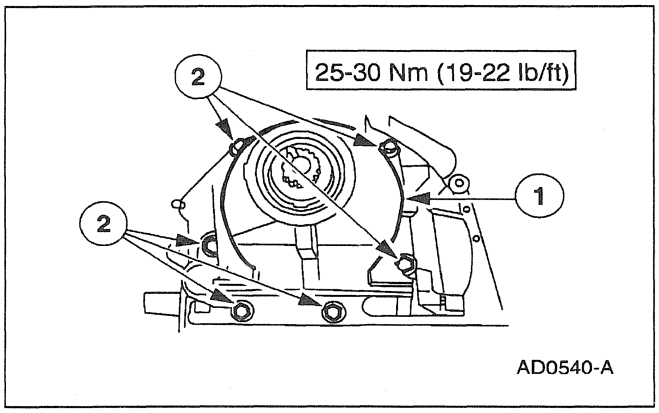

1. Install the extension housing and gasket.
   1 Position the extension housing gasket and the extension housing.
   2 Install the bolts and the nuts.

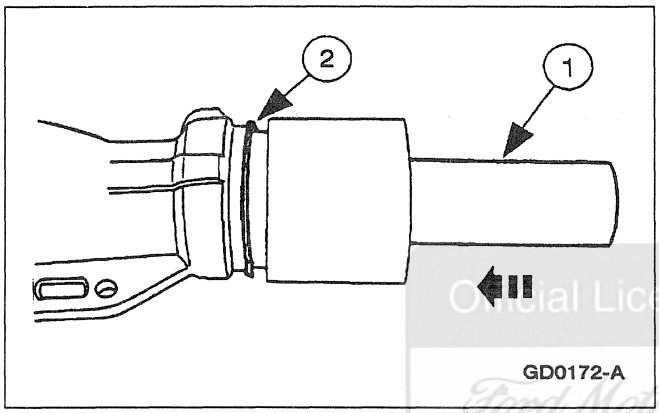

2. Install the new extension housing seal.
   1 Align Extension Housing Seal Replacer with the seal.
   2 Install the extension housing seal.

Official Licensed Product
Ford Motor Company

3. Raise and position the transmission.

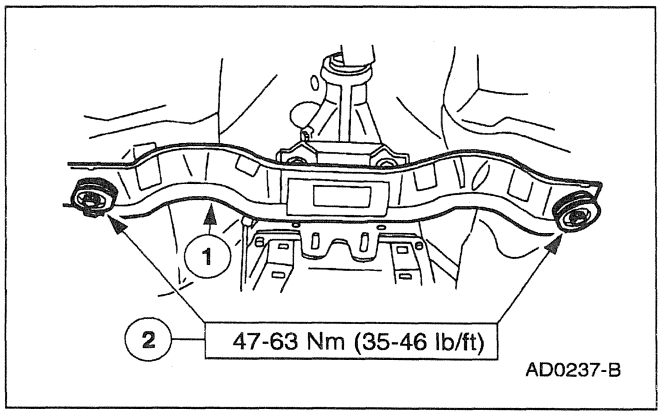

4. Install the transmission crossmember.
   1 Position the transmission crossmember.
   2 Install the bolts.

5. Remove Hi-Lift Jack.

IN-VEHICLE REPAIR (Continued)

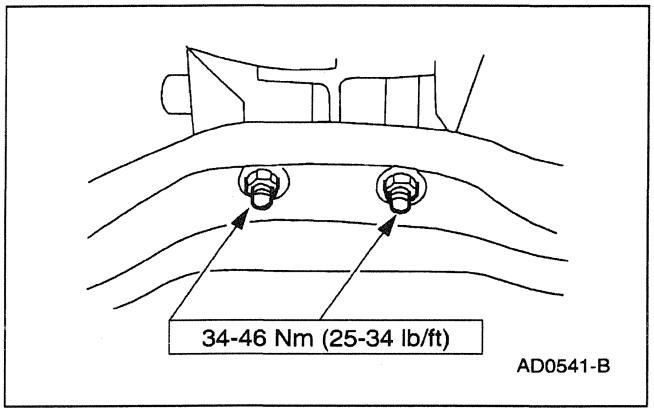

6. Install the two transmission mount nuts.

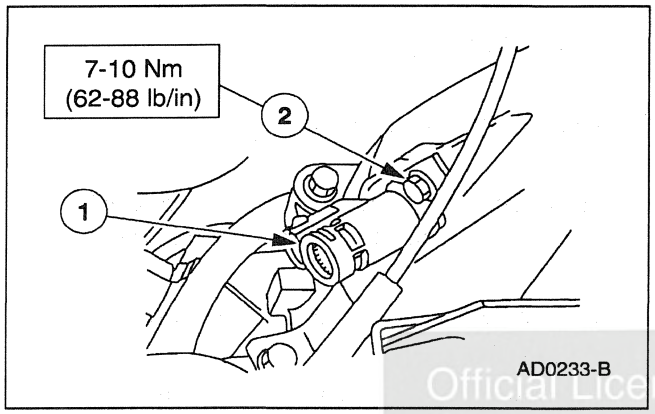

7. Install the VSS.
   1 Install the VSS.
   2 Install the bolt.
   3 Connect the electrical connector.

Official Licensed Product
Ford Motor Company

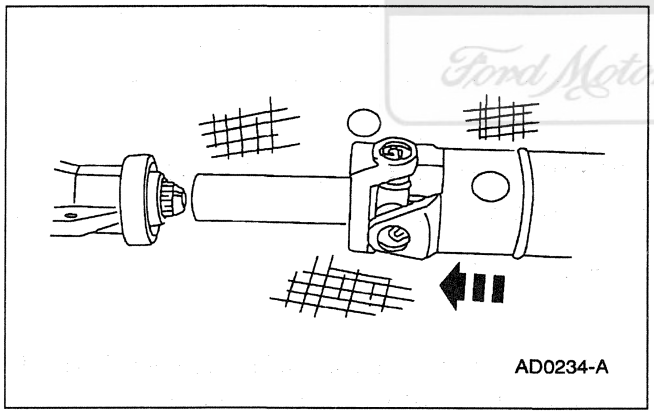

8. **NOTE:** To maintain the initial driveshaft balance, mark the rear driveshaft yoke and the axle flange so they may be installed in their original positions.

   Install the driveshaft.
   1 Position the driveshaft on transmission.
   2 Install the nuts and bolts.
   3 Position the driveshaft to differential.
   4 Install the four retaining bolts.

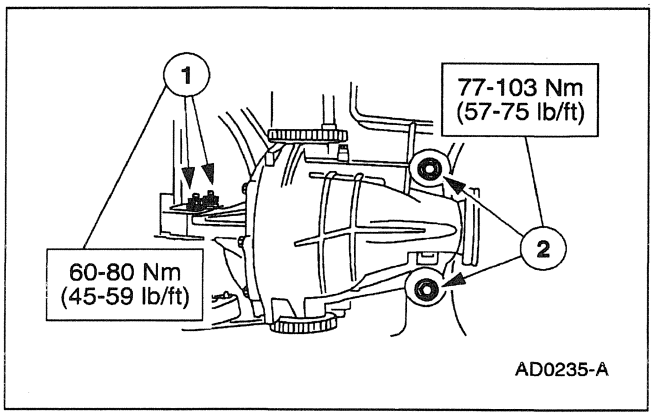

IN-VEHICLE REPAIR (Continued)

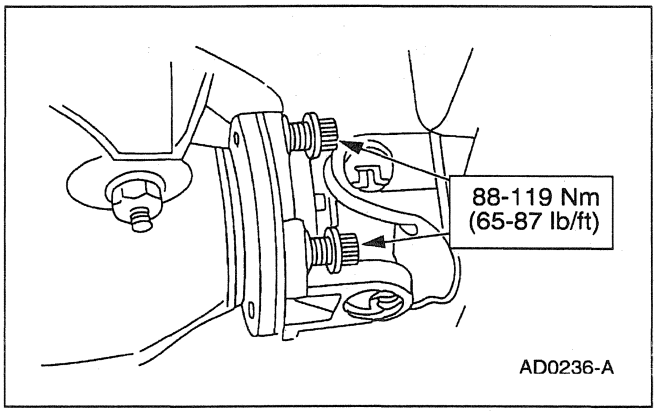

9. Lower the vehicle.
10. Connect the battery ground cable.
11. If equipped with air suspension, reactivate the system by turning on the air suspension switch.
12. Fill the transmission with fluid and inspect for proper operation.
    1 Use synthetic MERCON V Automatic Transmission Fluid XT-5-QM or equivalent meeting MERCON V specification.

Official Licensed Product
Ford Motor Company

Solenoid Service — Electronic Pressure Control

Removal

1. Remove the manual control lever; refer to Manual Control Lever Shaft Seal in this section.

IN-VEHICLE REPAIR (Continued)

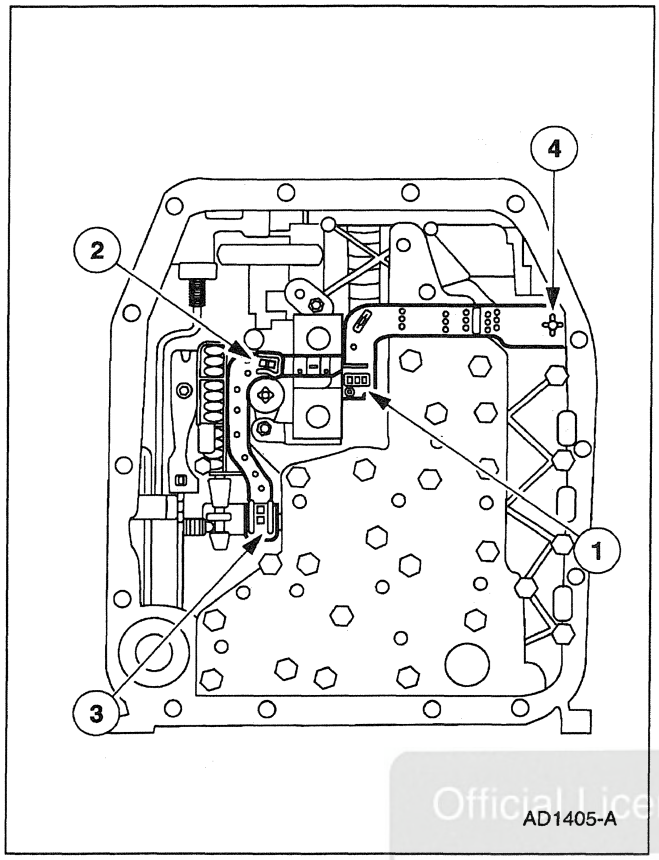

2. ⚠ **CAUTION: Do not pull on the plastic lead frame. This may cause damage to the connector ends. Carefully pry up on locking tabs to disconnect the sensors.**

   Disconnect the molded lead frame from the sensors.

   1 Disconnect the shift solenoid SSA/SS1 and SSB/SS2.

   2 Disconnect the torque converter clutch (TCC).

   3 Disconnect the electronic pressure control (EPC) solenoid.

   4 Disconnect the bulkhead inter connector.

Official Licensed Product
Ford Motor Company

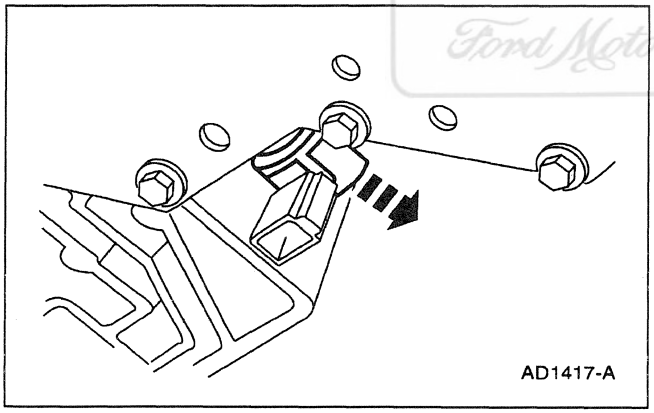

3. Remove the EPC solenoid.

IN-VEHICLE REPAIR (Continued)

Installation

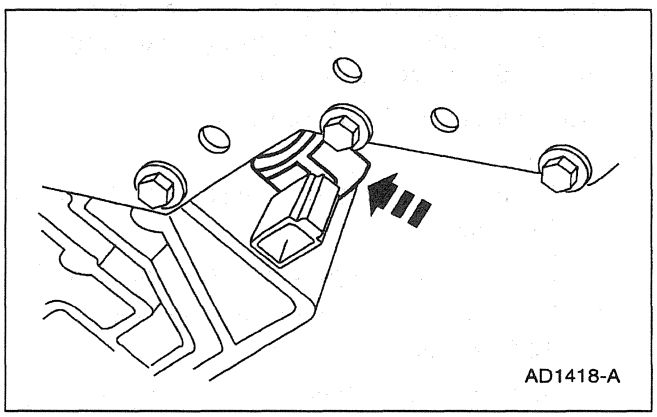

1. Install the EPC solenoid.

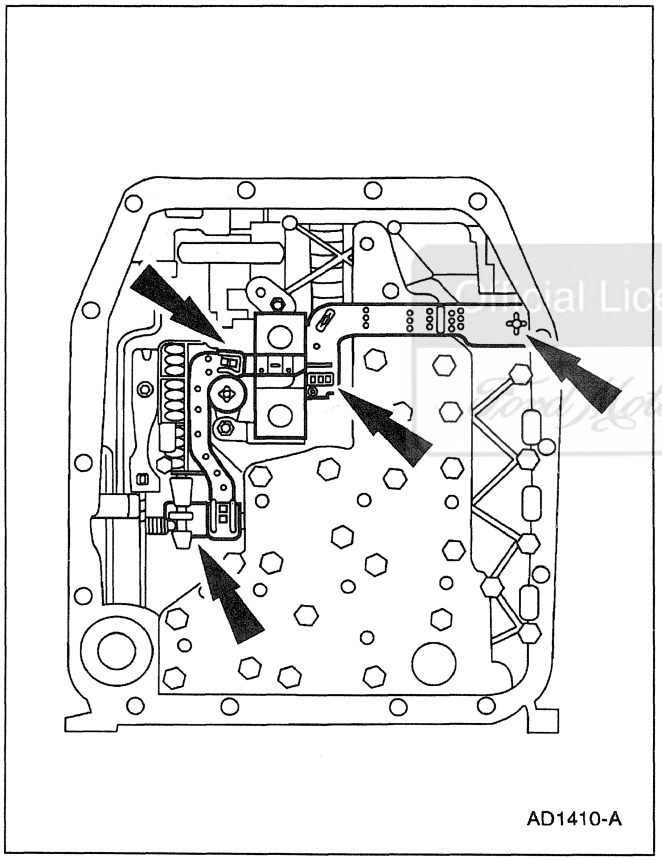

2. Connect the molded lead frame to the sensors.
   - Connect the bulkhead inter connector.
   - Connect the electronic pressure control (EPC) solenoid.
   - Connect the torque converter clutch (TCC).
   - Connect the shift solenoid SSA/SS1 and SSB/SS2.

Ford Motor Company

3. Install the manual control lever.

IN-VEHICLE REPAIR (Continued)

Manual Control Lever Shaft Seal

Special Tool(s)

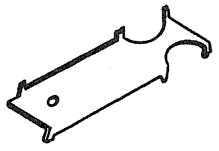 ST1633-A	Digital Transmission Range (TR) Sensor Alignment Tool 307-351 (T97L-70010-A)
ST1199-A	Shift Lever Seal Replacer 307-050 (T74P-77498-A)

Removal

1. If equipped turn the air suspension switch OFF.
2. Disconnect the battery ground cable (14301).
3. Raise the vehicle on a hoist; refer to Section 100-02.
4. Drain the transmission fluid and remove the fluid pan and filter; refer to Transmission Fluid Drain and Refill in this section.
5. Disconnect the digital TR sensor electrical connector.
6. Disconnect the transmission shift linkage.

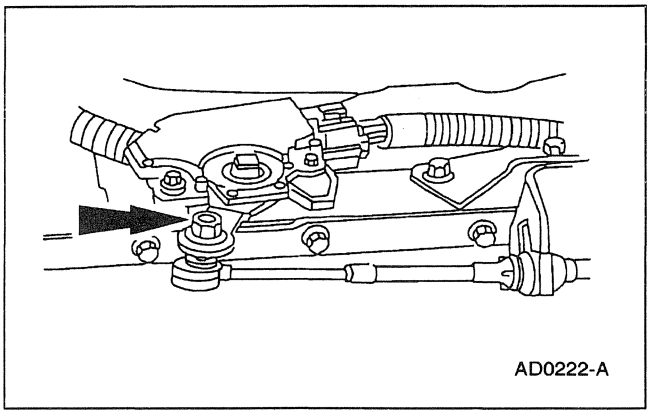

Official Licensed Product
Ford Motor Company

IN-VEHICLE REPAIR (Continued)

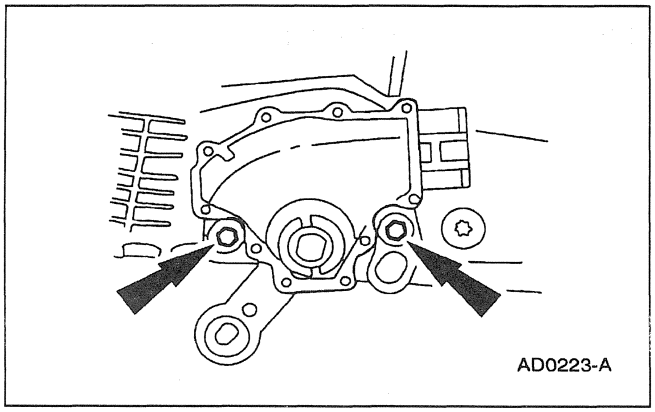

7. Remove the digital TR.
   1 Remove the bolts.
   2 Remove the digital TR sensor.

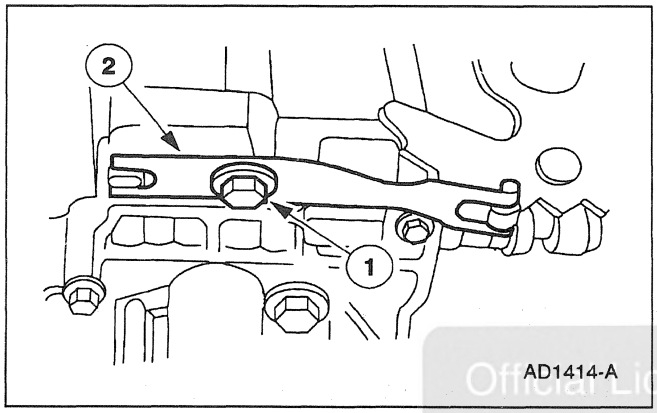

8. Remove the manual control valve detent lever spring (7A261).
   1 Remove the bolt.
   2 Remove the manual control valve detent lever spring.

Official Licensed Product
Ford Motor Company

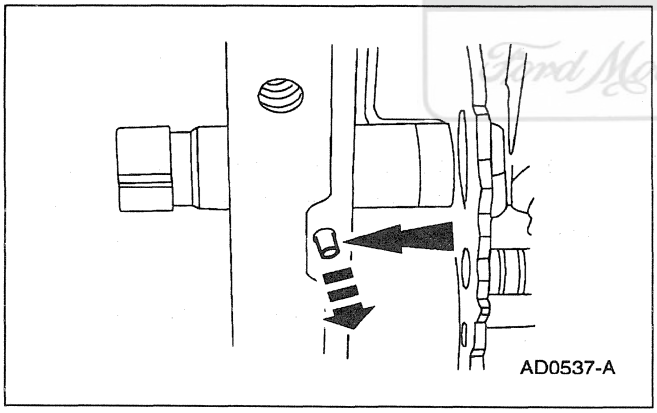

9. **NOTE:** Use a shop cloth to protect the transmission case surface.
   Remove the manual lever shaft retaining pin (7B210).

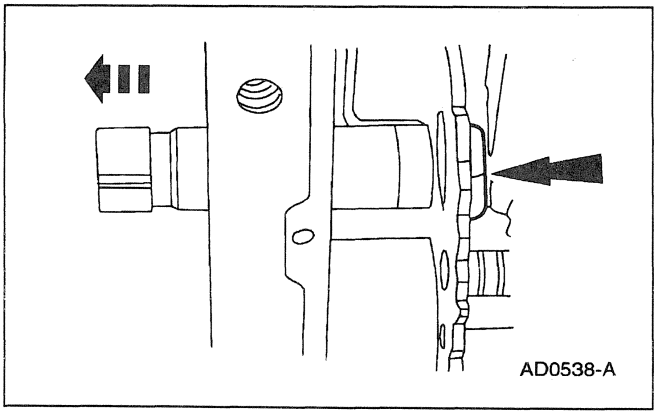

10. Remove the inner manual control lever shaft nut and slide the manual control lever shaft out of the case.

IN-VEHICLE REPAIR (Continued)

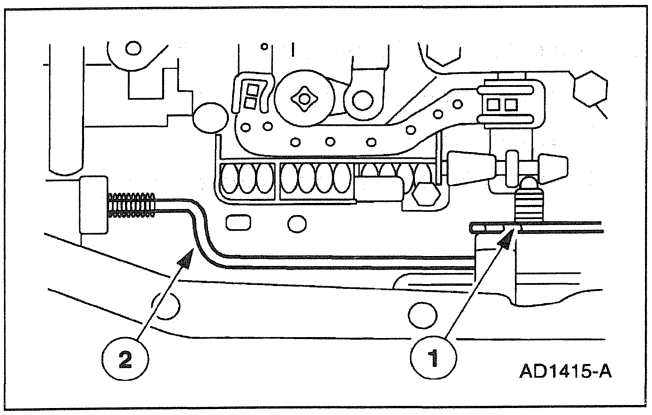

11. Remove the parking lever actuating rod.
    1 Remove the manual valve detent lever.
    2 Remove the parking lever actuating rod.

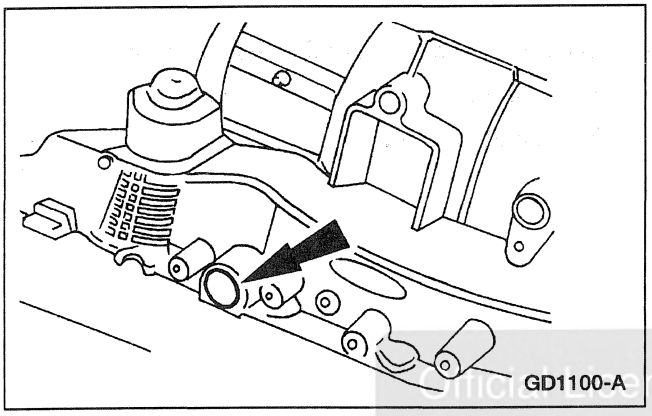

12. ⚠ **CAUTION: Use care not to damage the manual control lever shaft bore. New seal may leak.**
    Remove the manual control lever shaft seal.

Official Licensed Product
Ford Motor Company

Installation

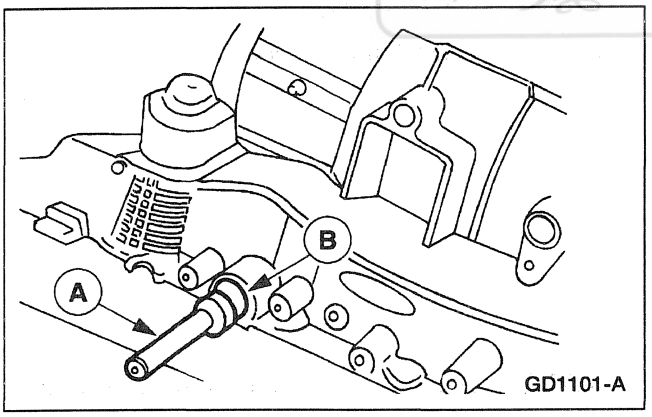

1. Use (A) Shift Lever Seal Replacer to install the (B) manual control lever seal.

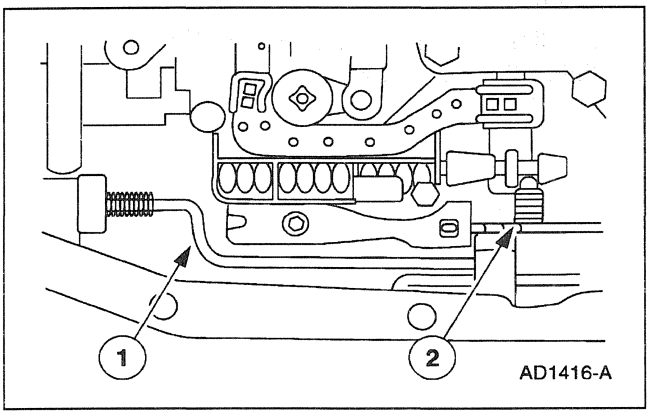

2. Install the parking lever actuating rod.
    1 Install the parking lever actuating rod.
    2 Install the manual valve detent lever.

IN-VEHICLE REPAIR (Continued)

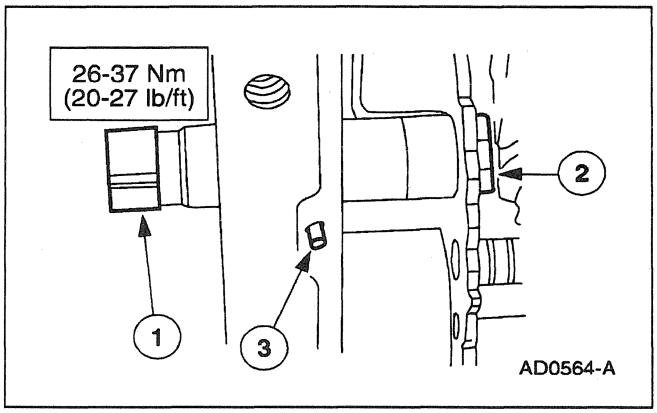

3. Install the manual control lever shaft.
   1 Install the manual control lever shaft.
   2 Install the nut.
   3 Install the manual lever shaft retaining pin.

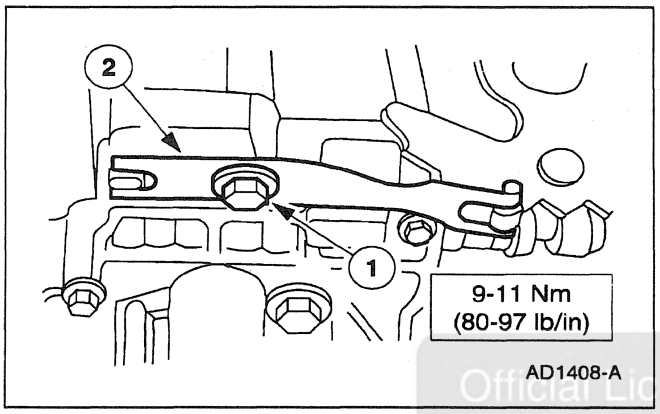

4. Install the manual valve detent lever spring.
   1 Position the manual valve detent lever spring.
   2 Install the bolt.

Official Licensed Product
Ford Motor Company

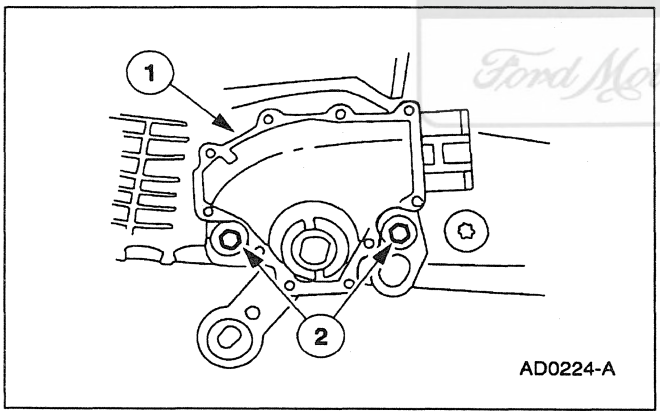

5. Install the digital TR sensor.
   1 Install the digital TR sensor.
   2 Loosely install the two bolts.

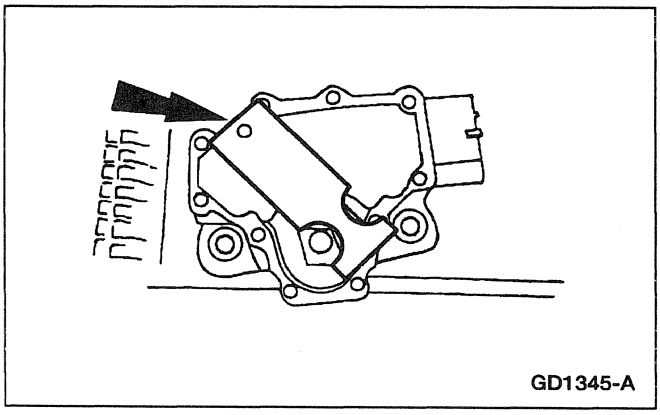

6. **NOTE:** Manual shift lever must be in the neutral position.

   Use digital TR Sensor Alignment Tool to align the digital TR sensor slots.

IN-VEHICLE REPAIR (Continued)

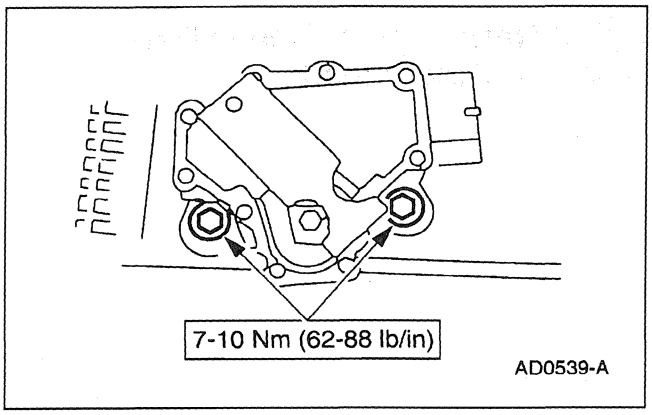

7. Tighten the bolts.

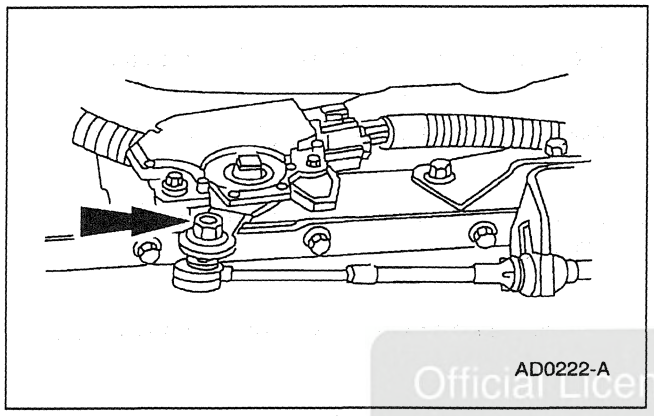

8. With manual lever in overdrive, connect the shift control cable.

Official Licensed Product
Ford Motor Company

9. Install the digital TR sensor electrical connector.
10. Install the filter and transmission fluid pan; refer to Fluid Pan, Gasket and Filter in this section.
11. Lower the vehicle.
12. Connect the battery ground cable.
13. If equipped with air suspension, reactivate the system by turning on the air suspension switch.
14. Fill the transmission with fluid and inspect for proper operation.

IN-VEHICLE REPAIR (Continued)

Digital Transmission Range (TR) Sensor — Adjustment

Special Tool(s)

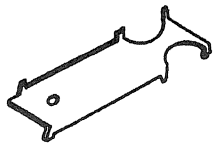 ST1633-A	Digital Transmission Range (TR) Sensor Alignment Tool 307-351 (T97L-70010-A)

1. If equipped turn the air suspension switch OFF.
2. Disconnect the battery ground cable (14301).
3. Raise the vehicle on a hoist; refer to Section 100-02.
4. Disconnect the manual lever shift control cable.

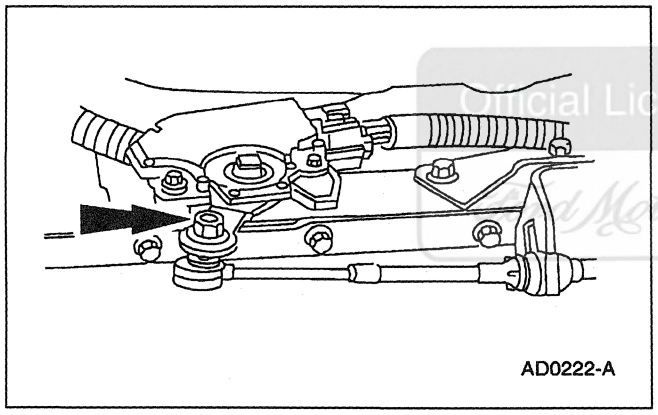

Official Licensed Product
Ford Motor Company

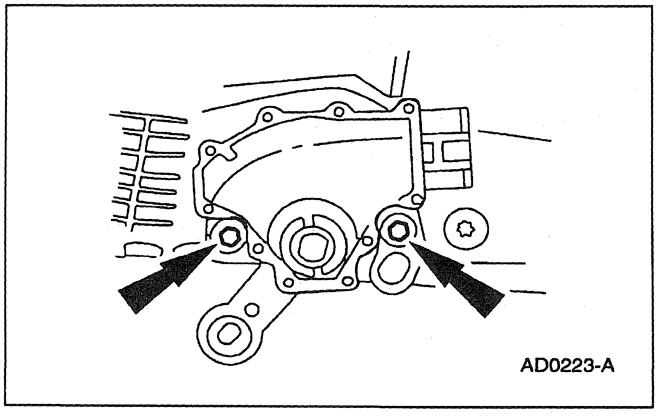

5. Loosen digital TR bolts.

IN-VEHICLE REPAIR (Continued)

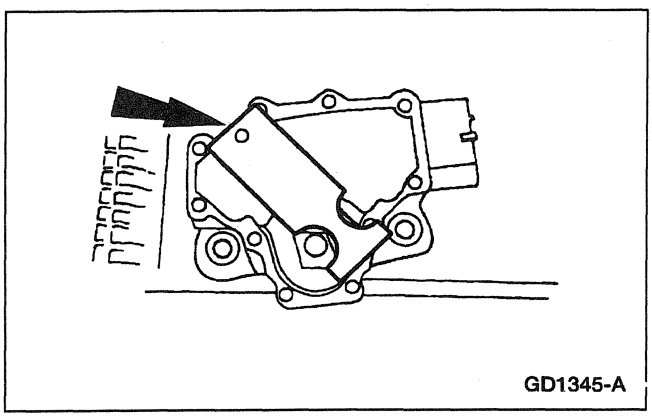
GD1345-A

6. **NOTE:** Manual shift lever must be in the neutral position.
   Use digital TR sensor alignment tool, to align the digital TR sensor slots.

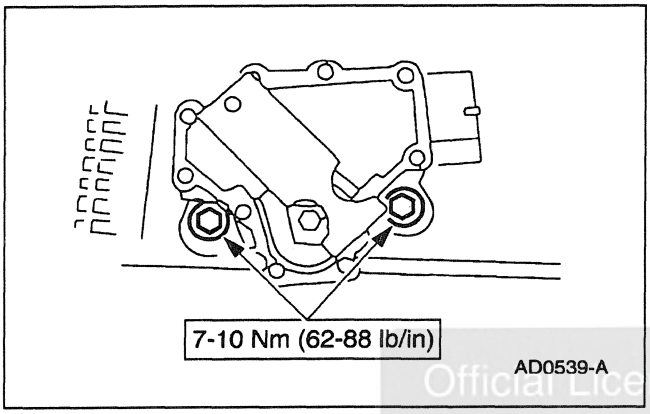

AD0539-A

7. Tighten the bolts.

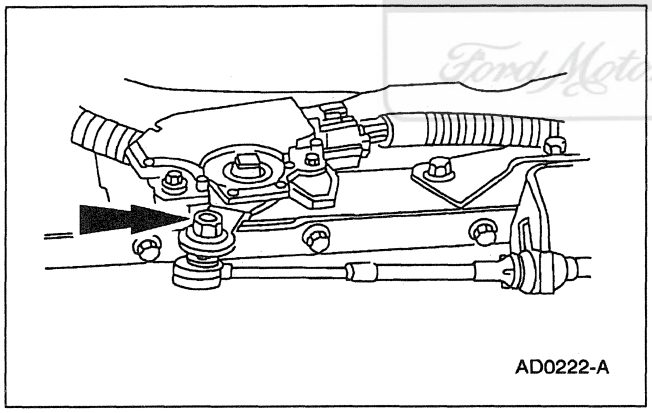
AD0222-A

8. With the manual lever in overdrive connect the shift lever control cable.

9. Install the digital TR sensor electrical connector.

10. Lower the vehicle.

11. Connect the battery ground cable.

12. If equipped with air suspension, reactivate the system by turning on the air suspension switch.

Official Licensed Product
Ford Motor Company

IN-VEHICLE REPAIR (Continued)

Servo —Reverse Servo Assembly

Special Tool(s)

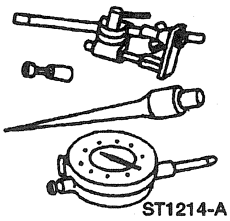 ST1214-A	Dial Indicator With Bracketry 100-002 (TOOL-4201-C) or equivalent
ST1210-A	Servo Piston Remover/Replacer 307-251 (T92P-70023-A)
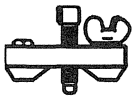 ST1202-A	Servo Piston Selection Tool 307-073 (T80L-77030-A)

Official Licensed Product
Ford Motor Company

Removal

1. Remove the main control valve body; refer to Main Control — Valve Body in this section.

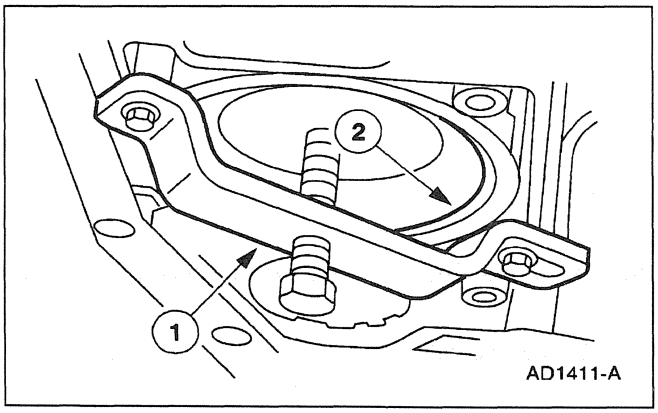

2. Use the Servo Piston Remover/Replacer to remove the reverse band servo retaining ring.
   1 Compress the servo spring.
   2 Remove the reverse band servo retaining ring.

IN-VEHICLE REPAIR (Continued)

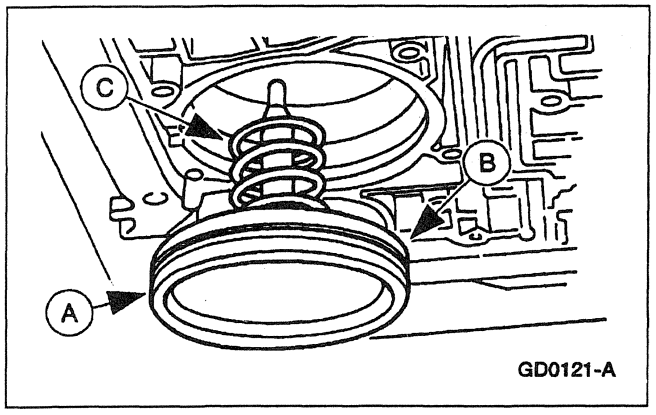

3. **NOTE:** The length of the rod attached to the piston is graded for three different lengths. Therefore, they should not be installed in any transmission other than the transmission from which they were removed.

   Remove the (A) reverse band servo cover (7D036), (B) reverse band servo piston and rod (7D189) and (C) reverse band servo spring (7D031).

Installation

NOTE: This is not an ordinary installation procedure and does not compensate for band wear.

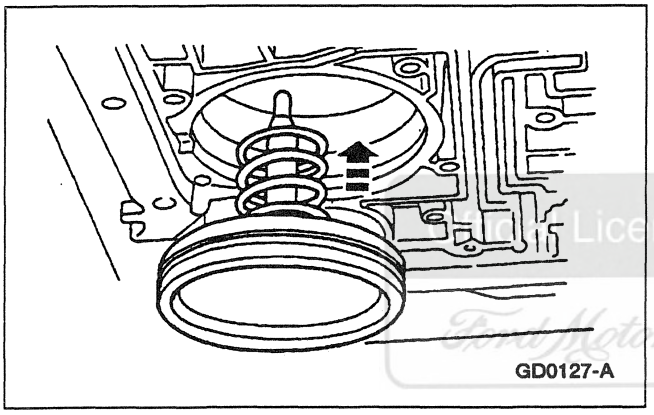

1. **NOTE:** Lubricate the reverse piston seal to facilitate assembly and prevent damage to the seal.

   Install the reverse servo piston and return spring.

   - Do not install piston cover.

Ford Licensed Product
Ford Motor Company

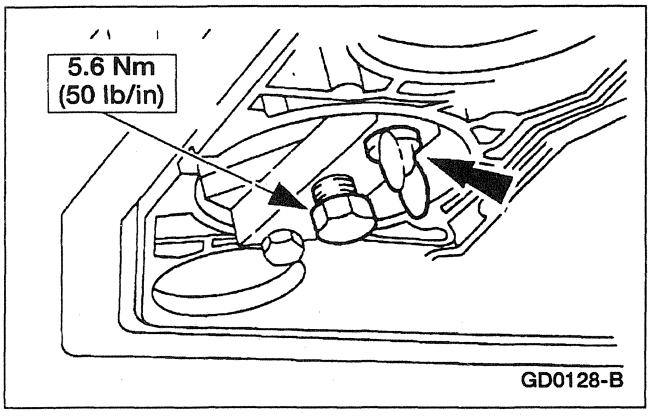

2. Install Servo Piston Selection Tool and tighten the band apply bolt.

IN-VEHICLE REPAIR (Continued)

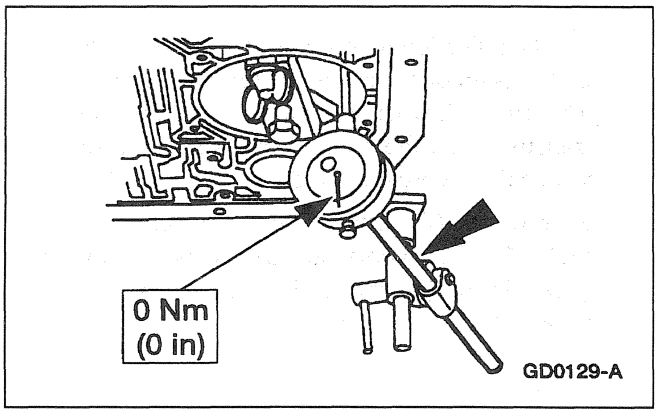

3. Attach Dial Indicator With Bracketry.
   - Position the indicator stem on the flat portion of the reverse servo piston and zero the dial indicator.

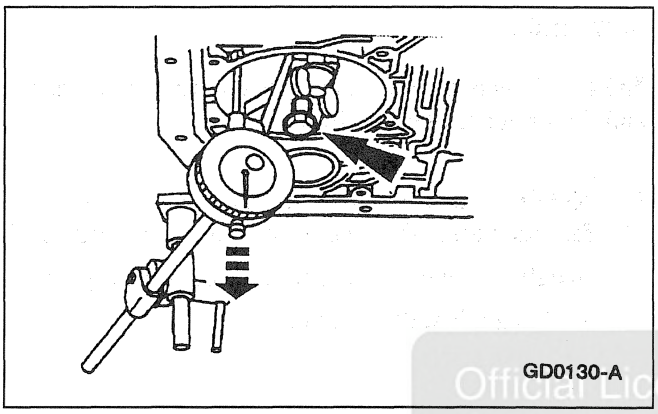

4. Loosen the bolt until the piston stops against the tool.

Official Licensed Product
Ford Motor Company

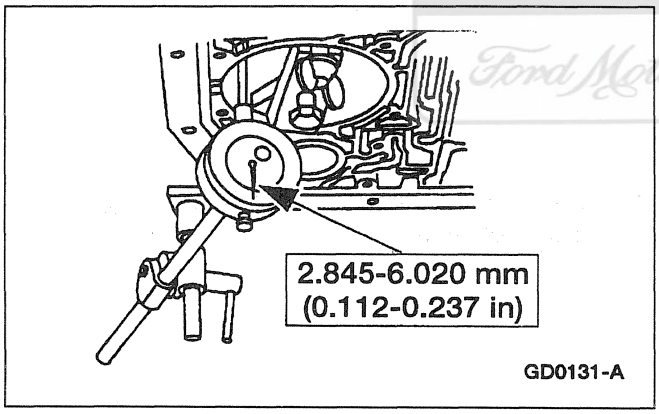

5. Verify the amount of piston travel on the dial indicator is within specification.

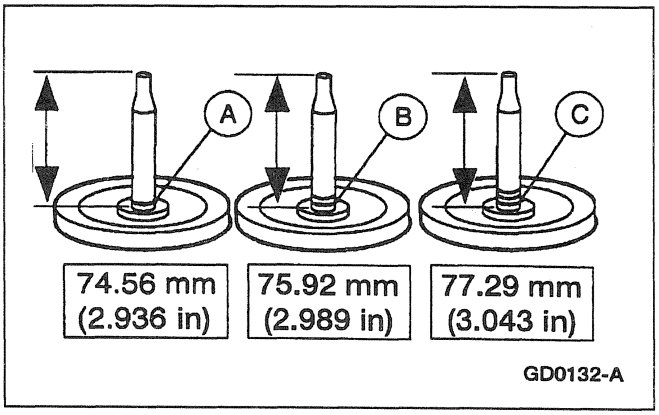

6. If piston travel is not within specification, select the proper servo assembly (A) one groove, (B) two groove or (C) three groove, to bring the servo piston travel within specification.

IN-VEHICLE REPAIR (Continued)

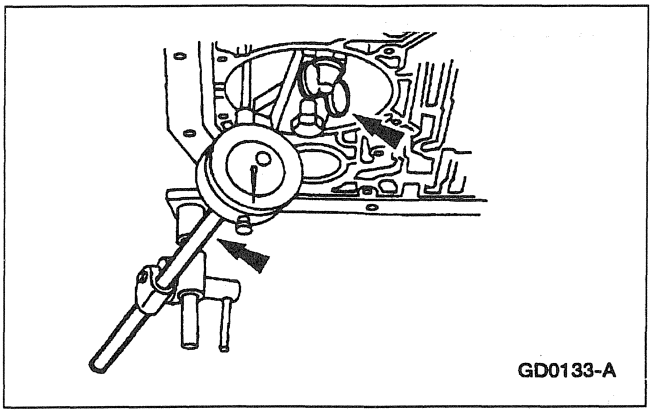

7. Remove the dial indicator and servo selection tool.

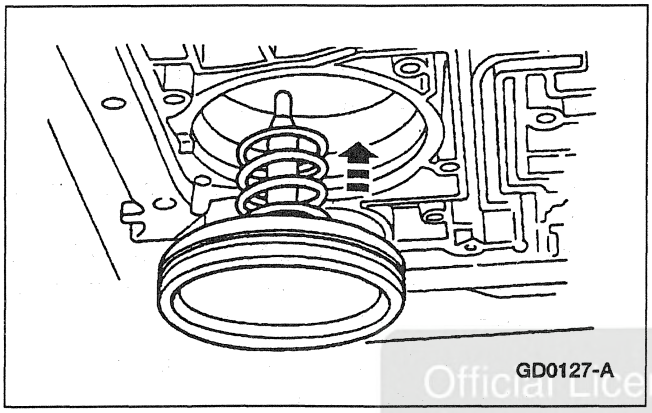

8. Install the proper servo piston assembly spring and the reverse servo piston cover and seal.

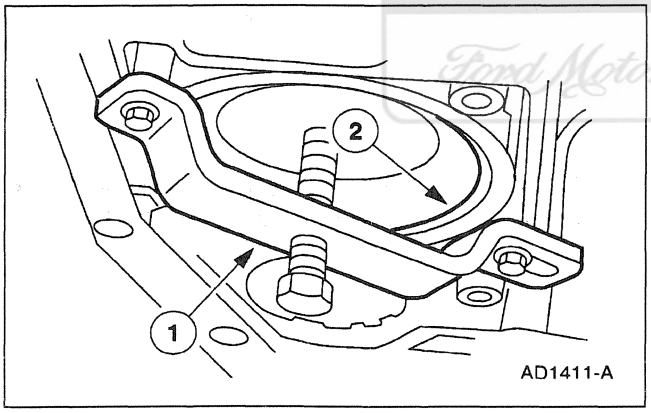

9. Use the Servo Piston Remover/Replacer to install the reverse servo retaining ring.
   1 Compress the servo spring.
   2 Install the reverse band servo retaining ring.

10. Install the main control valve body.

Official Licensed Product
Ford Motor Company

IN-VEHICLE REPAIR (Continued)

Servo —Overdrive

Special Tool(s)

ST1210-A	Servo Piston Remover/Replacer 307-251 (T92P-70023-A)

Removal

1. Remove the main control valve body; refer to Main Control — Valve Body in this section.

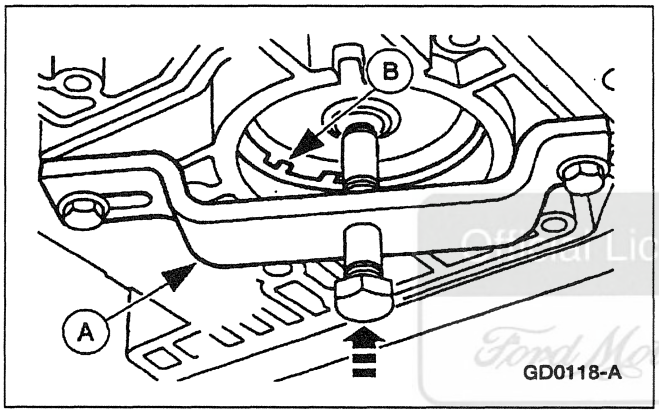

2. **NOTE:** If tool is not available, extreme care must be taken. Spring pressure will force overdrive servo piston (7F200) assembly out of case (7005). Case bore damage may result from trying to pry on overdrive servo internal retaining ring.

   Use (A) Servo Piston Remover/Replacer to compress the servo spring then remove the (B) overdrive servo retaining ring.

Original Licensed Product
Ford Motor Company

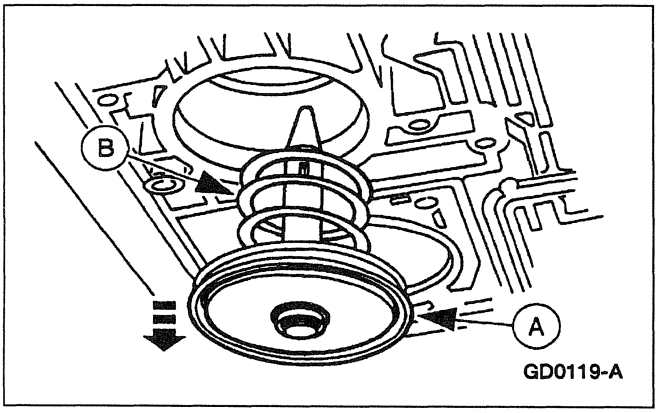

3. Remove the (A) overdrive servo piston and the (B) overdrive servo piston return spring (7F201).

IN-VEHICLE REPAIR (Continued)

Installation

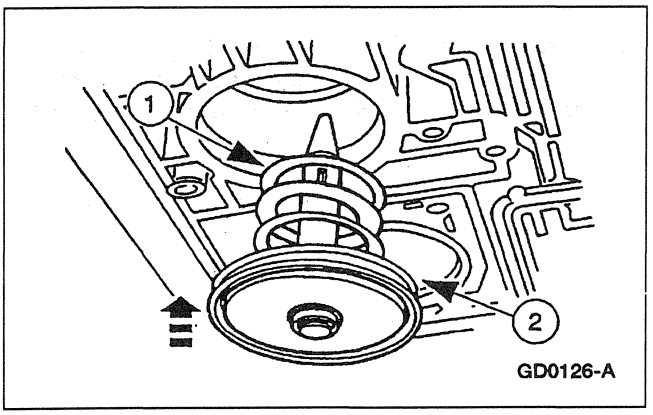

1. Install the overdrive servo piston assembly.
   1 Install the overdrive servo piston return spring.
   2 Install the overdrive servo piston assembly.

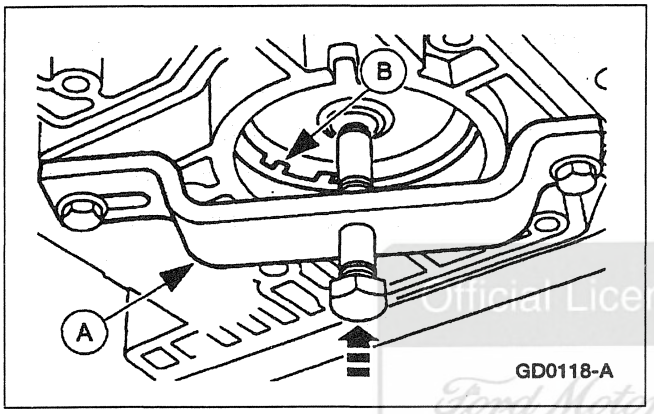

2. Use (A) Servo Piston Remover/Replacer Tool to install the (B) overdrive servo piston retaining ring.

Official Licensed Product
Ford Motor Company

3. Install the main control valve body.

Accumulator —1-2

Special Tool(s)

ST1210-A	Servo Piston Remover/Replacer 307-251 (T92P-70023-A)

IN-VEHICLE REPAIR (Continued)

Removal

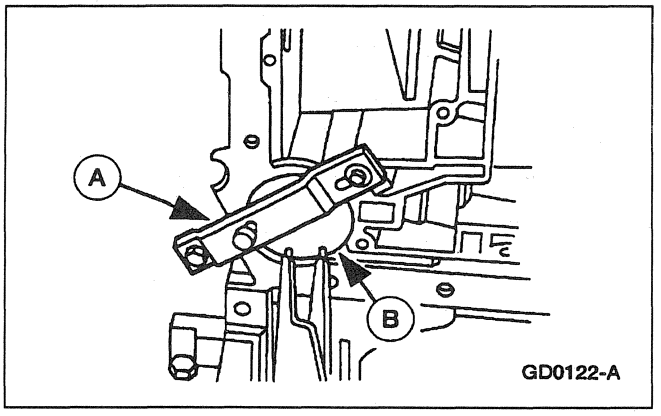

1. Use (A) Servo Piston Remover Replacer to compress the 1-2 accumulator cover and remove the (B) accumulator piston retaining ring (7384).

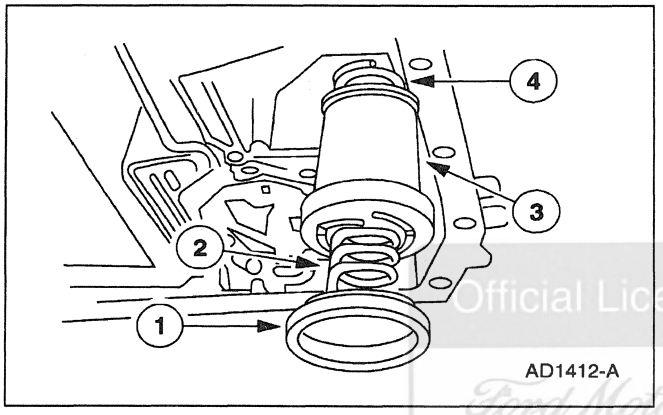

2. **NOTE:** Note the location of the 1-2 accumulator springs for reference during assembly.
   1 Remove the1-2 accumulator cover.
   2 Remove the lower 1-2 accumulator spring.
   3 Remove the accumulator piston (7F251).
   4 Remove the upper 1-2 accumulator spring.

Official Licensed Product
Ford Motor Company

Installation

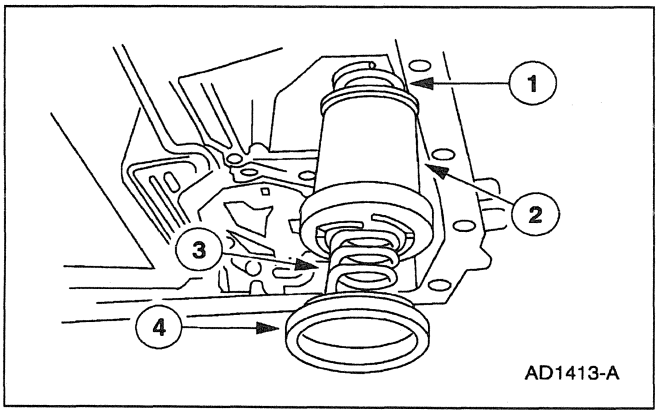

1. Install the 1-2 accumulator.
   1 Install the 1-2 accumulator upper spring.
   2 Install the accumulator piston.
   3 Install the 1-2 accumulator lower spring.
   4 Install the cover and seal assembly.

IN-VEHICLE REPAIR (Continued)

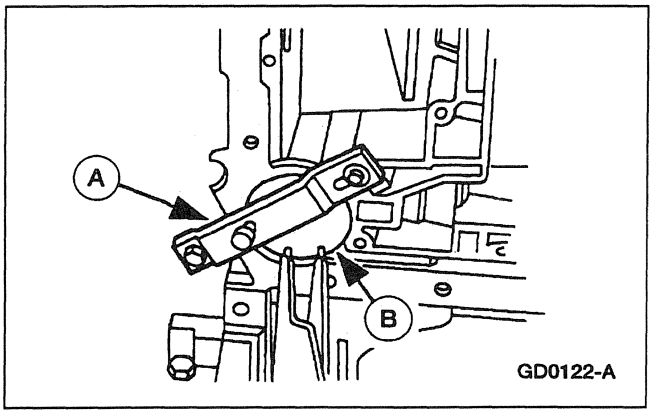

2. Use (A) Servo Piston Remover Replacer to install the (B) accumulator piston retaining ring.

Accumulator —2-3

Removal

1. Remove the main control valve body (7A100); refer to Main Control — Valve Bodyin this section.

Official Licensed Product
Ford Motor Company

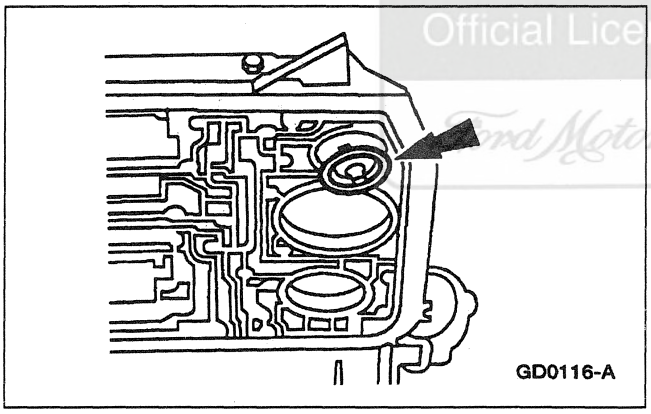

2. Remove the 2-3 accumulator piston retaining ring (7384).

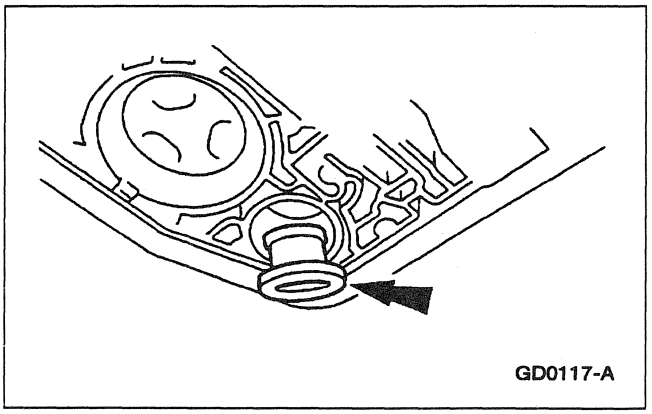

3. Remove the accumulator piston (7F251) and spring.

IN-VEHICLE REPAIR (Continued)

Installation

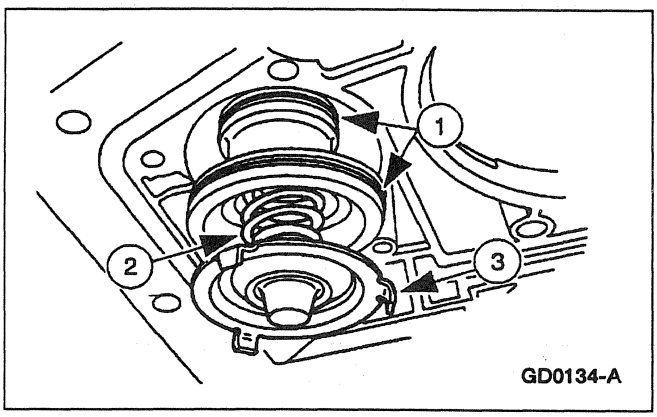

1. Install the 2-3 accumulator assembly.
   1 Install the accumulator piston.
   2 Install the accumulator piston spring (7F285).
   3 Install the accumulator spring retainer.

2. Install the main control valve body.

Transmission Support Crossmember

Removal

Official Licensed Product
Ford Motor Company

1. If equipped, turn the air suspension switch OFF.

2. Disconnect the battery ground cable (14301).

3. Raise the vehicle on a hoist; refer to Section 100-02.

4. Remove the exhaust system; refer to Section 309-00.

5. Support the transmission with a suitable jack.

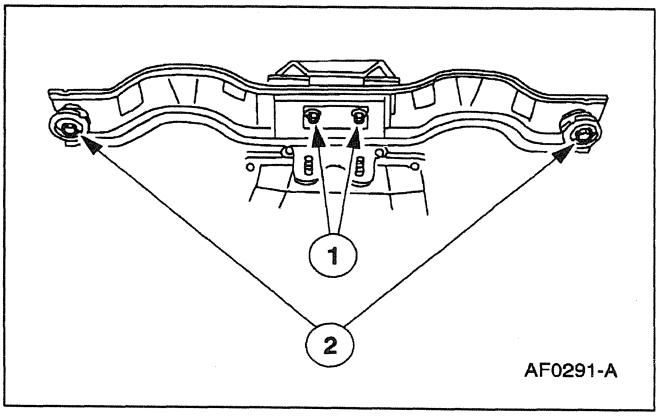

6. Remove the transmission support crossmember (6A023).
   1 Remove the nuts retaining the transmission support insulator to the transmission support crossmember.
   2 Remove the bolts retaining the transmission support crossmember to the body brackets. Remove the transmission support crossmember.

IN-VEHICLE REPAIR (Continued)

Installation

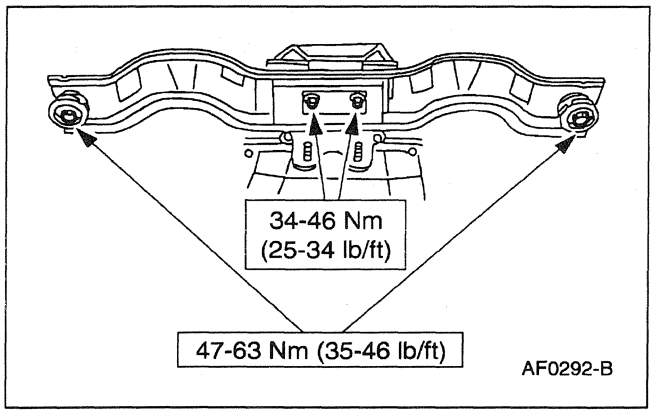

1. Follow the removal procedure in reverse order.

Transmission Insulator and Retainer

Removal

Official Licensed Product
Ford Motor Company

1. Remove transmission support crossmember (6A023); refer to Transmission Support Crossmember in this section.

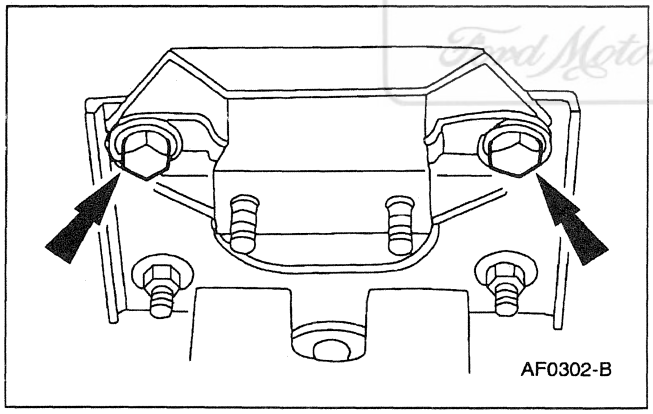

2. Remove the nuts from the transmission support insulator and remove the transmission support insulator (6068).

IN-VEHICLE REPAIR (Continued)

Installation

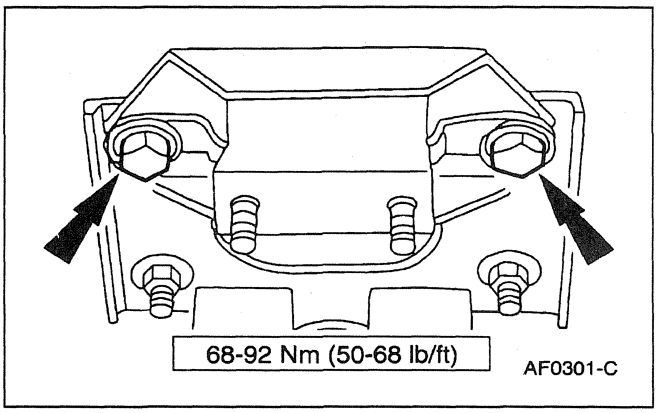

1. Follow the removal procedure in reverse order.

REMOVAL

Transmission

Special Tool(s)

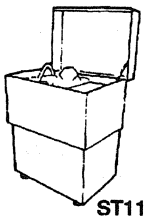 ST1136-A	Torque Converter/Oil Cooler Cleaner 307-F011 (014-00028) or equivalent
ST1636-A	Torque Converter Holding Tool 307-346 (T97T-7902-A)

Official Licensed Product
Ford Motor Company

1. Place the transmission range selector lever in NEUTRAL.
2. If equipped, turn the air suspension switch OFF.
3. Disconnect the battery ground cable.
4. Raise the vehicle on a hoist; refer to Section 100-02.

REMOVAL (Continued)

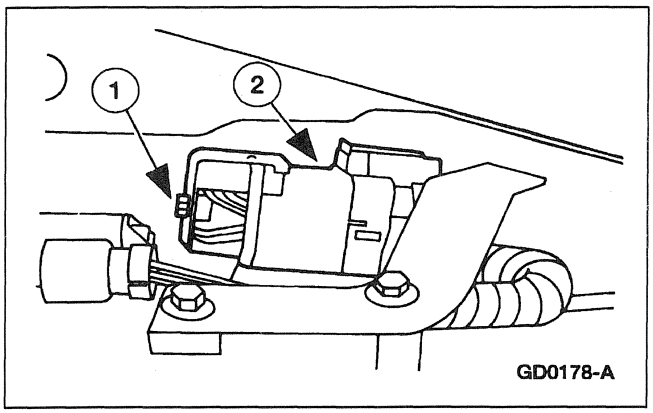

5. Disconnect the transmission harness electrical connector.
   1 Remove the bolt.
   2 Disconnect the electrical connector.

6. If transmission disassembly is required, drain the transmission fluid; refer to the procedure in this section.

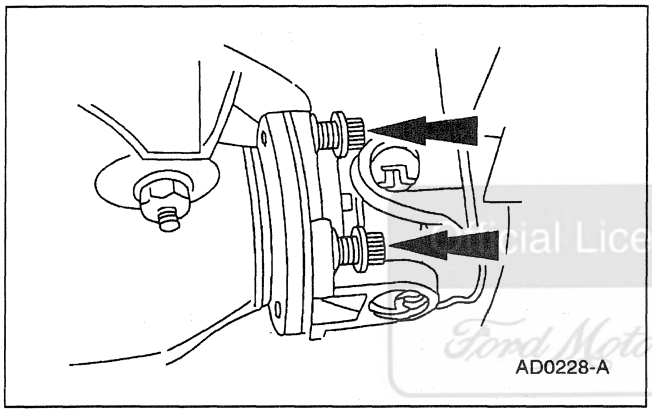

7. **NOTE:** To maintain the initial driveshaft balance, mark the REAR driveshaft yoke and the axle companion flange so they may be installed in their original positions.

   Remove the driveshaft.
   - Remove the four bolts.
   - Position the rear driveshaft yoke aside.
   - Remove the rear differential retaining nuts and bolts.
   - Separate the driveshaft from the transmission.

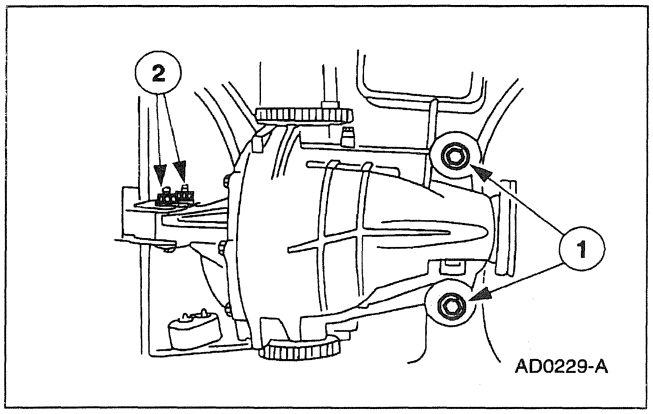

Ford Motor Company Official Licensed Product

REMOVAL (Continued)

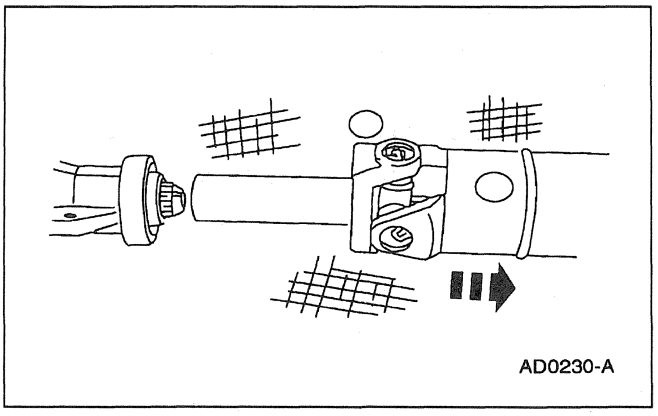

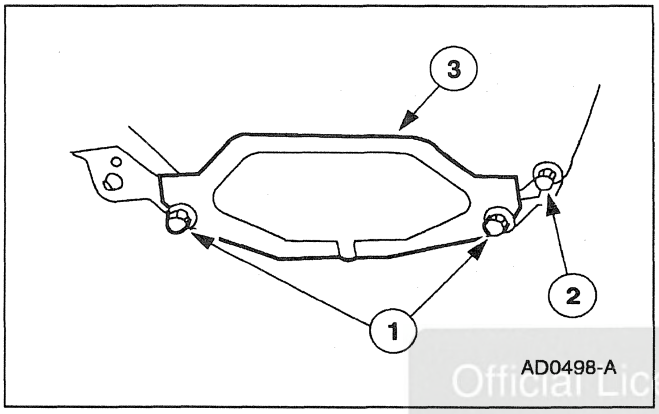

8. Remove the transmission inspection cover.
   1 Remove the bolts.
   2 Remove the bolt.
   3 Remove the inspection cover.

Official Licensed Product
Ford Motor Company

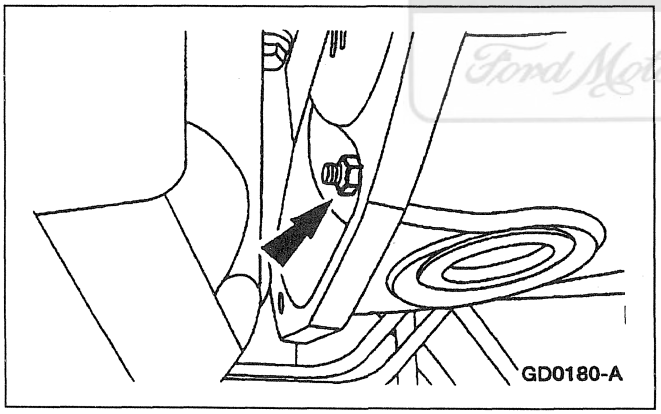

9. Remove the four nuts retaining the torque converter (7902).
   - Rotate the crankshaft to access all the nuts.

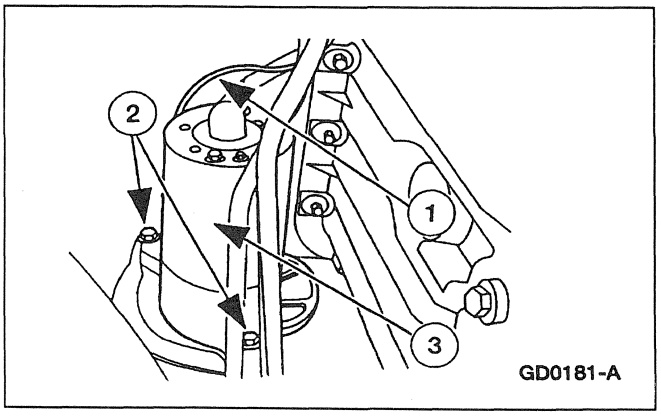

10. Remove the starter.
    1 Disconnect the electrical connectors.
    2 Remove the bolts.
    3 Remove the starter.

REMOVAL (Continued)

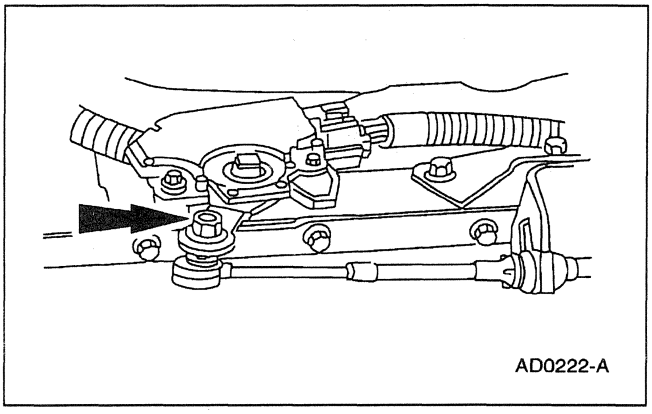

11. Disconnect the transmission shift linkage.

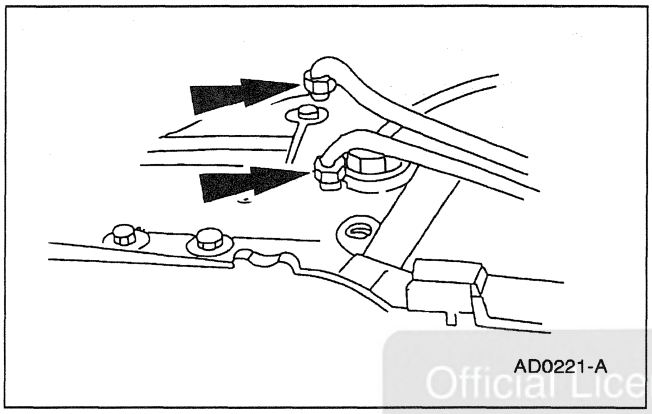

12. Disconnect the transmission fluid cooler tubes.

Official Licensed Product
Ford Motor Company

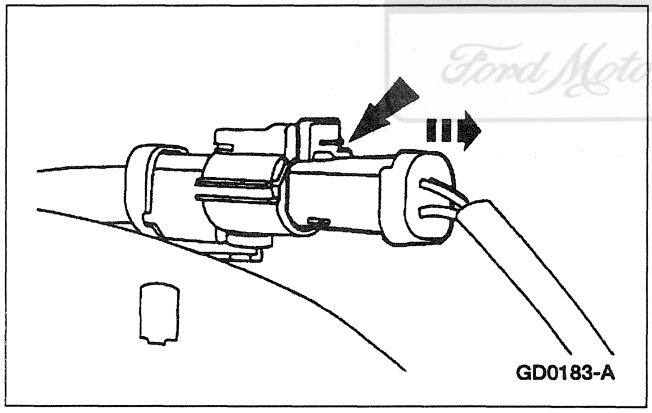

13. Disconnect the heated oxygen (HO2S) sensor electrical connectors.

14. Position the Hi-Lift Jack under the transmission.

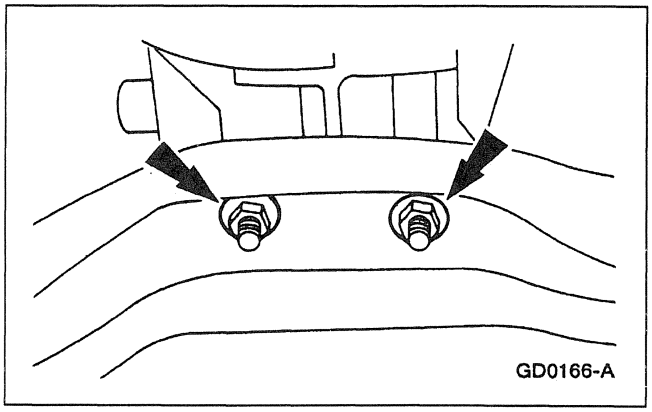

15. Remove the nuts.

REMOVAL (Continued)

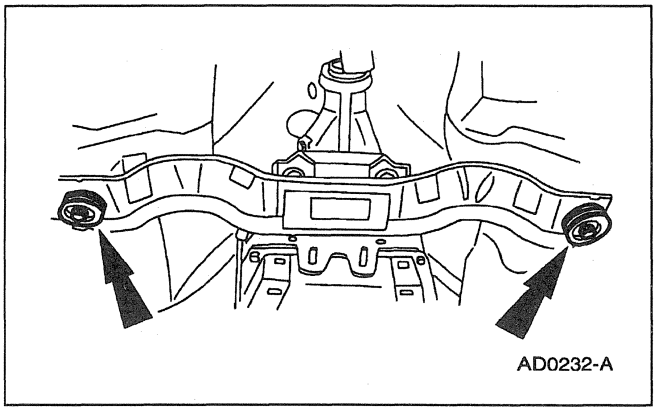

16. Remove the transmission crossmember.
    1 Remove the bolts.
    2 Remove the transmission crossmember.

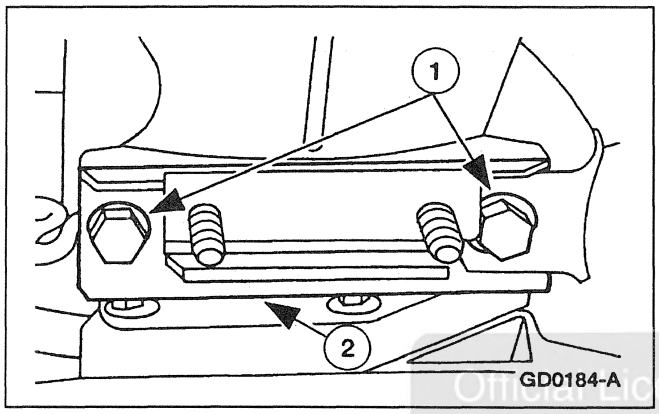

17. Remove the transmission mount.
    1 Remove the bolts.
    2 Remove the transmission mount.

Official Licensed Product
Ford Motor Company

18. Remove the dual converter Y pipe; refer to Section 309-00.

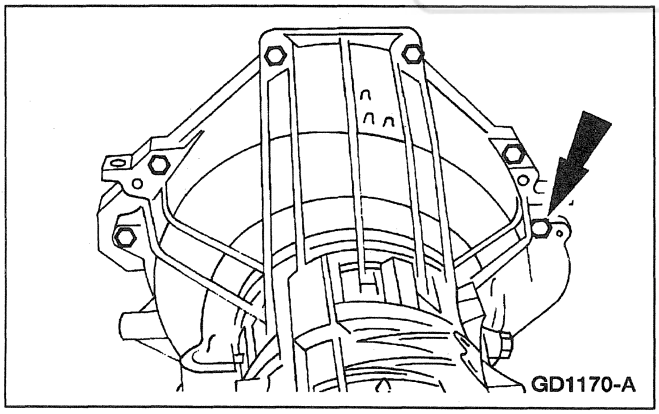

19. Remove the bolts.

REMOVAL (Continued)

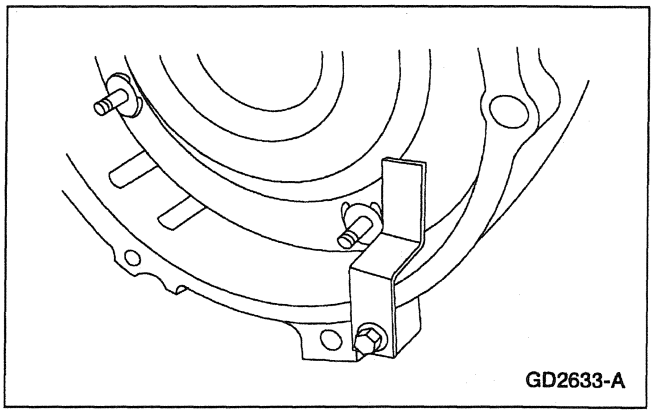

20. **WARNING: THE TORQUE CONVERTER IS HEAVY AND MAY RESULT IN INJURY IF IT FALLS OUT OF THE TRANSMISSION. SECURE THE TORQUE CONVERTER IN THE TRANSMISSION.**

    Install Torque Converter Holding Tool.

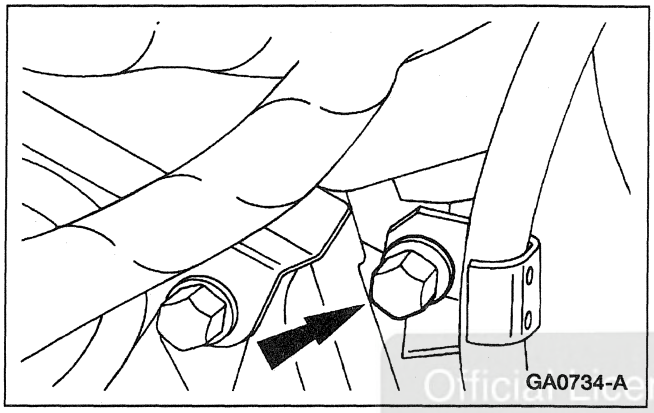

21. Remove the bolt from the back of the RH cylinder head.

Official Licensed Product
Ford Motor Company

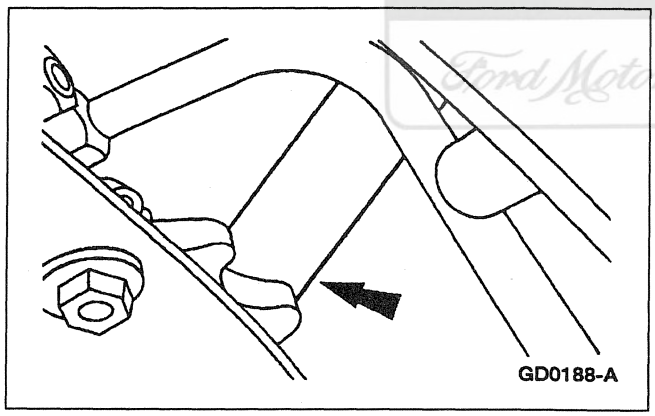

22. Remove the fluid fill tube.

23. Lower the transmission from the vehicle. Perform transmission fluid cooler backflushing and cleaning; refer to Transmission Fluid Cooler — Backflushing/Cleaning in this section.

DISASSEMBLY

Transmission

Special Tool(s)

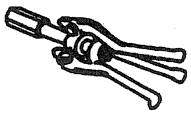 ST1200-A	Bearing Cup Puller 308-047 (T77F-1102-A)
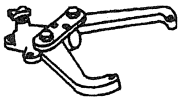 ST1186-A	Bench Mounted Holding Fixture 307-003 (T57L-500-B)
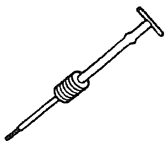 ST1185-A	Impact Slide Hammer 100-001 (T50T-100-A)
ST1187-A	Impact Slide Hammer 307-005 (T59L-100-B)
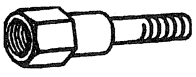 ST1208-A	Pump Puller Adapter 307-221 (T89T-70010-A)

(Continued)

Special Tool(s)

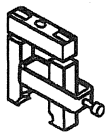 ST1192-A	Seal Remover 307-048 (T74P-77248-A)
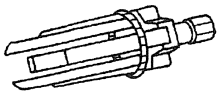 ST1213-A	Seal Remover 307-001 (TOOL-1175-AC) or equivalent
ST1210-A	Servo Piston Remover/Replacer 307-251 (T92P-70023-A)
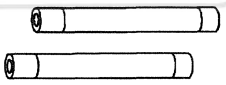 ST1631-A	Torque Converter Handles 307-091 (T81P-7902-C)

Official Licensed Product
Ford Motor Company

DISASSEMBLY (Continued)

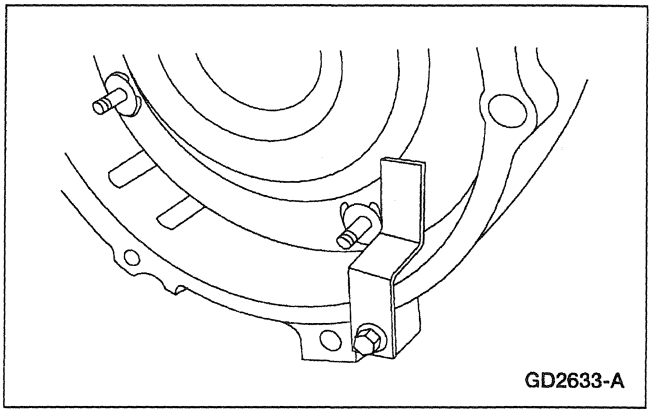

1. Remove the Torque Converter Holding Tool.

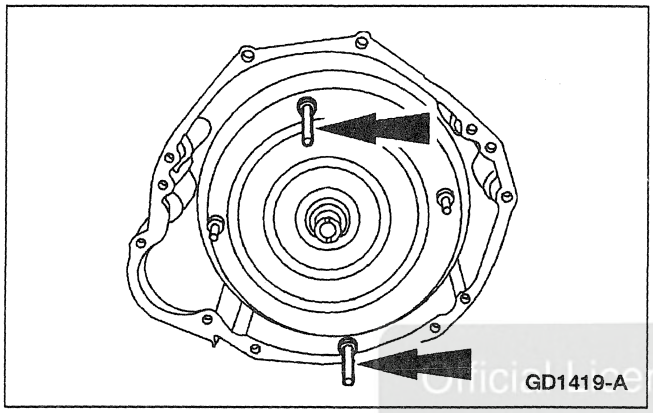

2. Using the Torque Converter Handles, remove torque converter (7902).

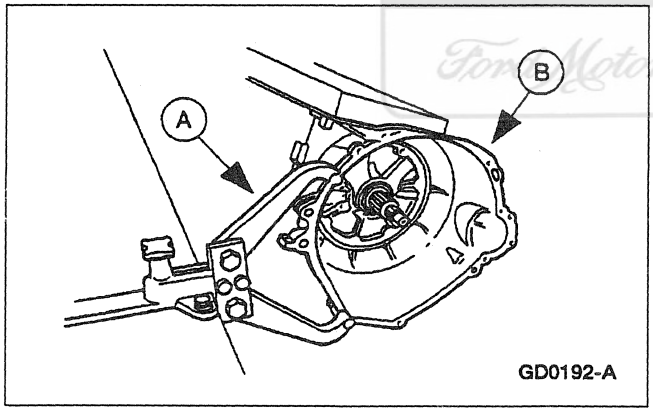

3. Use (A) Bench Mounted Holding Fixture to mount the (B) transmission to the bench.

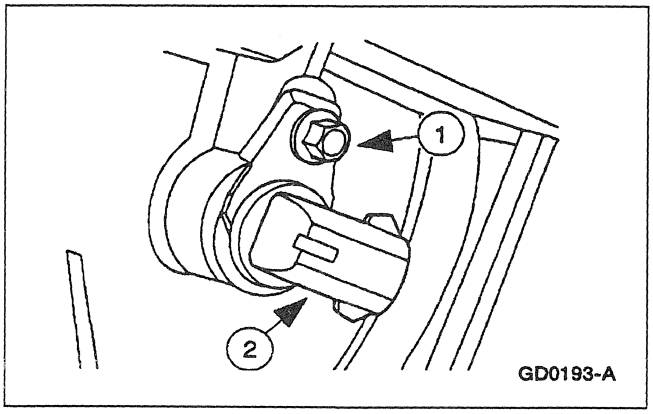

4. Remove the output shaft speed (OSS) sensor.
   1 Remove the bolt.
   2 Remove the OSS.

Official Licensed Product
Ford Motor Company

DISASSEMBLY (Continued)

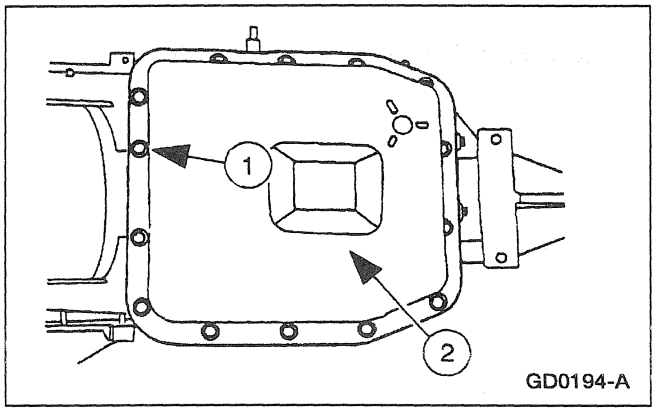

5. **NOTE:** If the transmission fluid pan-to-case gasket is not damaged, it may be reused.

   Remove the transmission fluid pan (7A194) and transmission fluid pan to case gasket.

   1 Remove the bolts.

   2 Remove the transmission fluid pan and transmission fluid pan to case gasket.

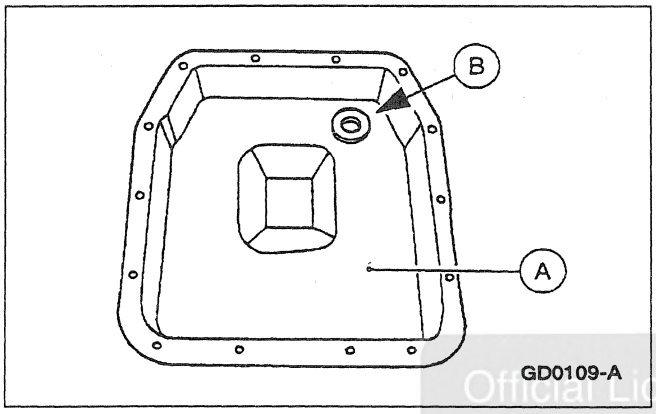

6. Clean the (A) transmission fluid pan and (B) pan magnet.

Official Licensed Product
Ford Motor Company

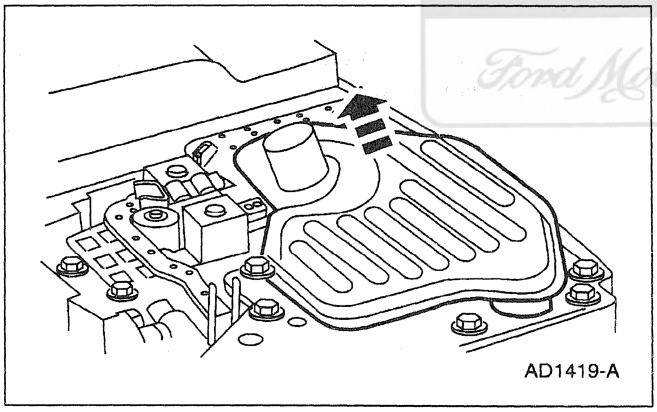

7. **CAUTION: If installing a new filter, and grommet remains in the main control bore, carefully use a small screwdriver to remove the grommet. Use care not to damage the main control bore.**

   NOTE: If transmission is being serviced for a contamination-related failure, use a new filter and seal. The filter may be reused if no excessive contamination is present.

   Remove the fluid filter and grommet.

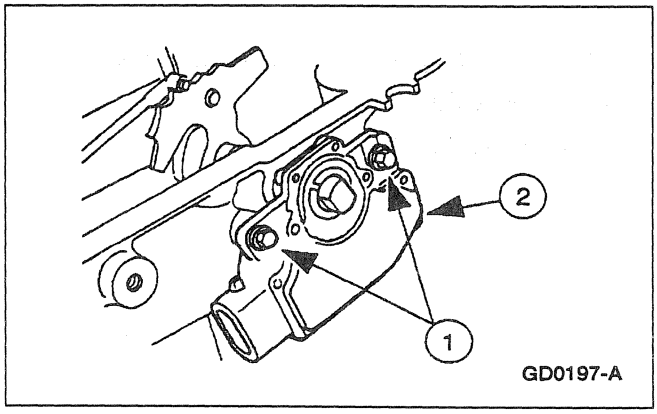

8. Remove the digital TR sensor.

   1 Remove the bolts.

   2 Remove the digital TR sensor.

DISASSEMBLY (Continued)

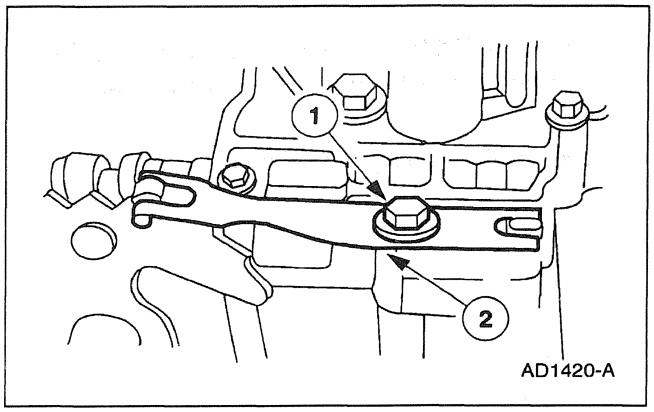

9. Remove the manual control valve detent lever spring (7A261).
   1 Remove the bolt.
   2 Remove the manual control valve detent lever spring.

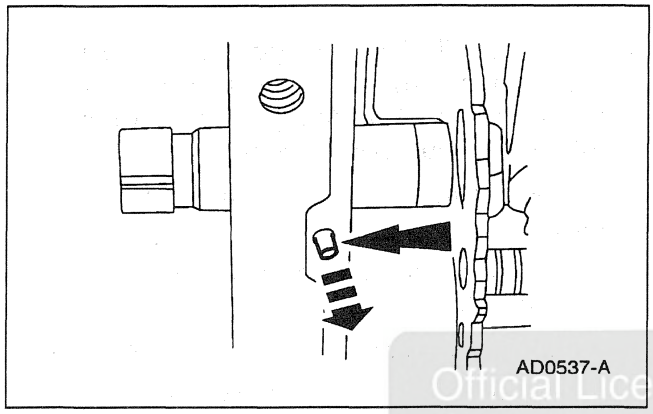

10. **NOTE:** Use a shop cloth to protect the transmission case surface.
    Remove the manual lever shaft retaining pin (7B210).

Official Licensed Product
Ford Motor Company

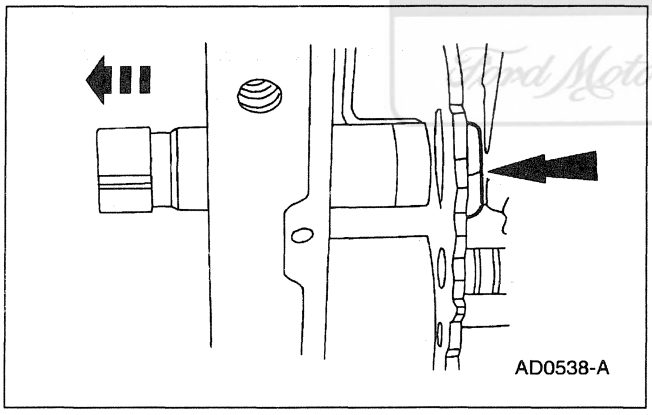

11. Remove the manual lever shaft inner nut.
    - Slide the manual control lever shaft out of the case while removing the inner nut.

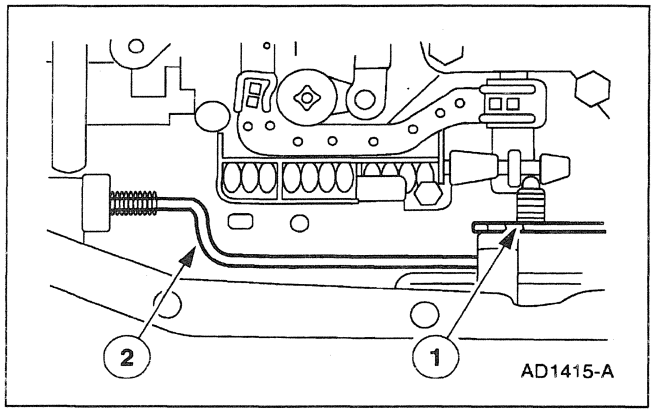

12. Remove the parking lever actuating rod.
    1 Remove the manual valve detent.
    2 Remove the parking level actuating rod

DISASSEMBLY (Continued)

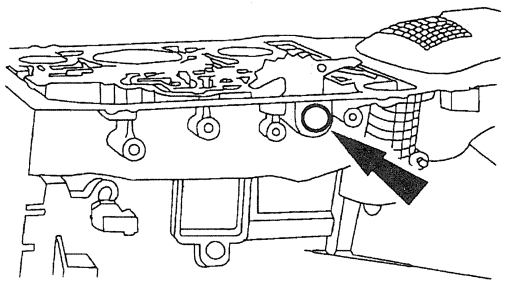

AD0542-A

13. ⚠ **CAUTION: Use care not to damage the manual control lever shaft bore. New seal may leak.**

    Remove the manual control lever shaft seal.

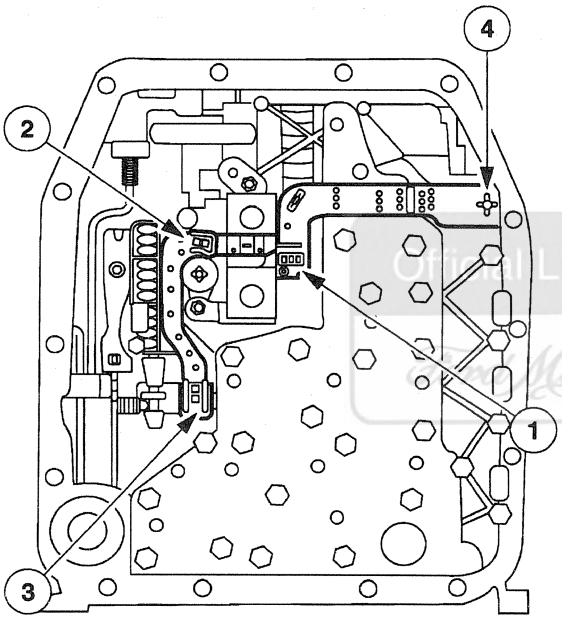

AD1405-A

14. ⚠ **CAUTION: Do not pull on the plastic lead frames. This may cause damage to the connector ends. Carefully pry up on locking tabs to disconnect the sensors.**

    Disconnect the molded lead frame from the sensors.

    1 Disconnect the shift solenoid SSA/SS1 and SSB/SS2.
    2 Disconnect the torque converter clutch (TCC).
    3 Disconnect the electronic pressure control (EPC) solenoid.
    4 Disconnect the bulkhead inter connector.

Official Licensed Product Ford Motor Company

DISASSEMBLY (Continued)

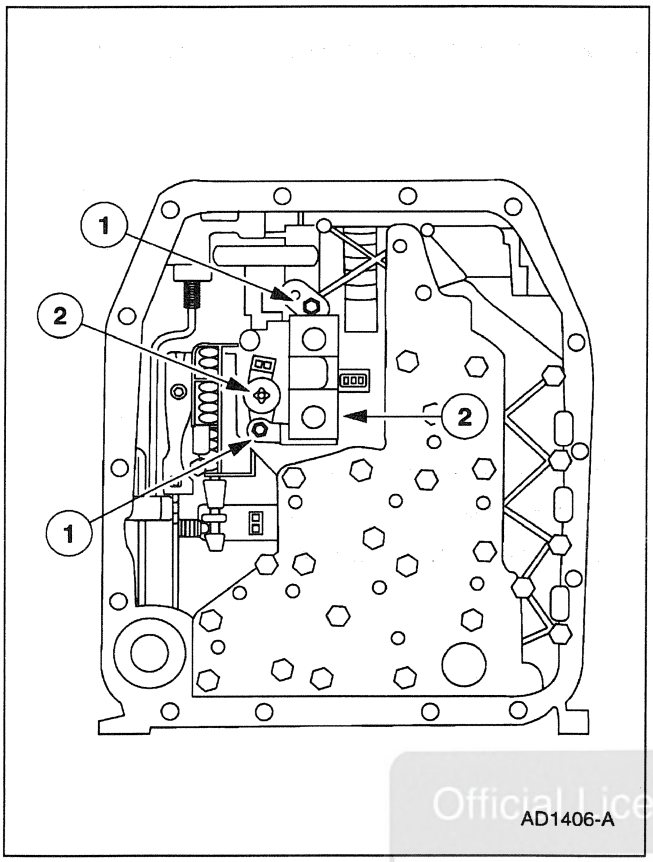

AD1406-A

15. Remove the shift solenoid and the torque converter clutch (TCC) solenoid.
    1 Remove the bolts.
    2 Remove the shift solenoid and the torque converter clutch (TCC) solenoid.

Official Licensed Product
Ford Motor Company

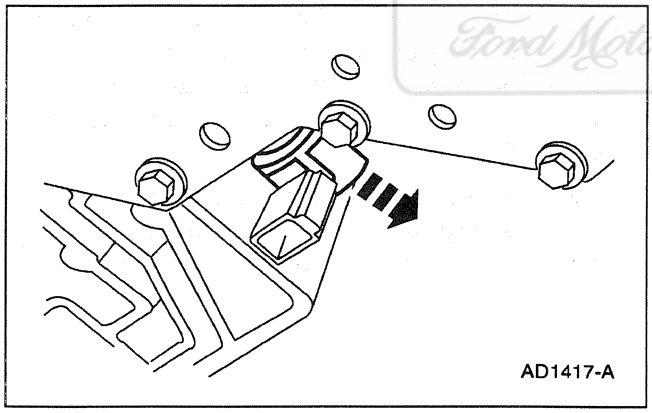
AD1417-A

16. Remove the EPC solenoid.

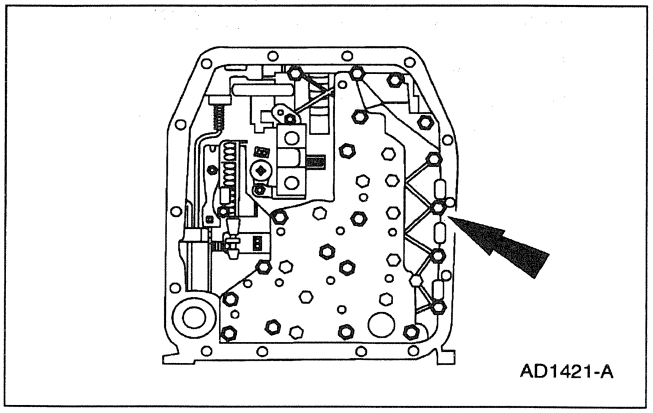
AD1421-A

17. Remove the 23 main control valve body bolts.

DISASSEMBLY (Continued)

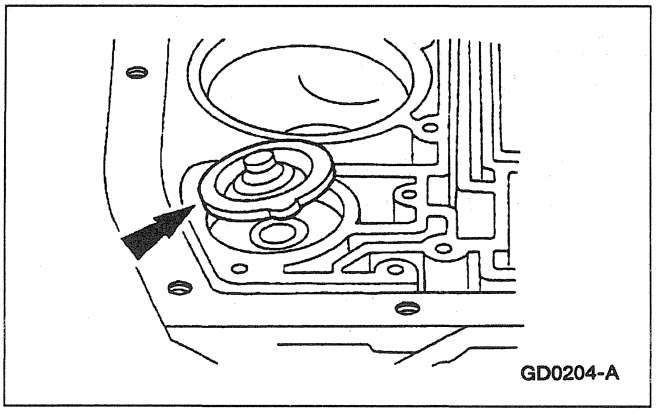
GD0204-A

18. Remove the 2-3 accumulator spring retainer.

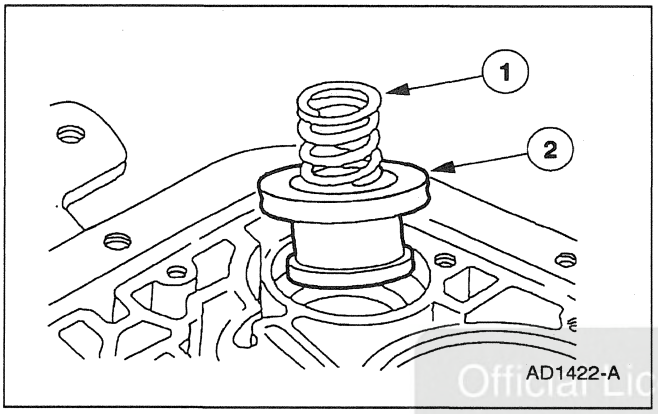

AD1422-A

19. Remove the 2-3 accumulator piston.
    1 Remove the 2-3 accumulator spring.
    2 Remove the 2-3 accumulator piston.

Official Licensed Product
Ford Motor Company

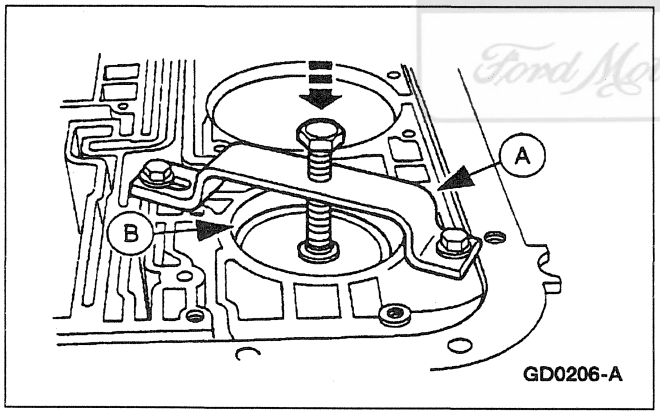

GD0206-A

20. **NOTE:** If tool is not available, extreme care must be taken. Spring pressure will force overdrive servo piston assembly out of case. Case bore damage may result from trying to pry on internal retaining ring.

    Use (A) Servo Piston Remover/Replacer to compress the piston spring, then remove the (B) overdrive servo piston retainer (7G280).

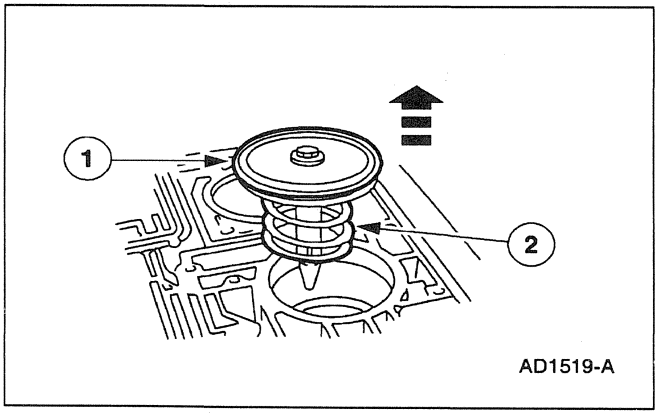

AD1519-A

21. Remove the overdrive servo piston (7F200).
    1 Remove the overdrive servo piston.
    2 Remove the overdrive servo piston return spring (7F201).

DISASSEMBLY (Continued)

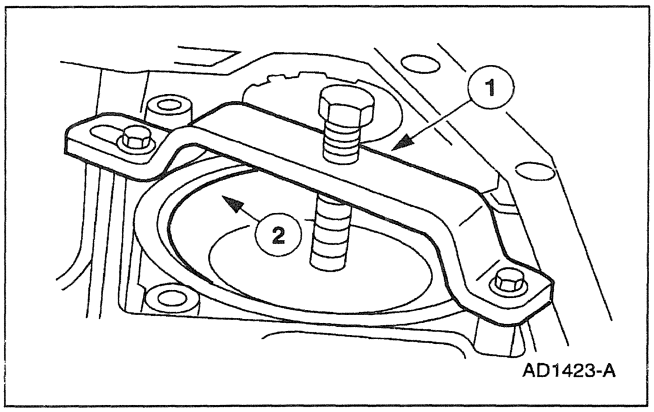

22. Use Servo Piston Remover/Replacer to remove the reverse band servo retaining ring.
    1 Compress the reverse band servo.
    2 Remove the reverse band servo retaining ring.

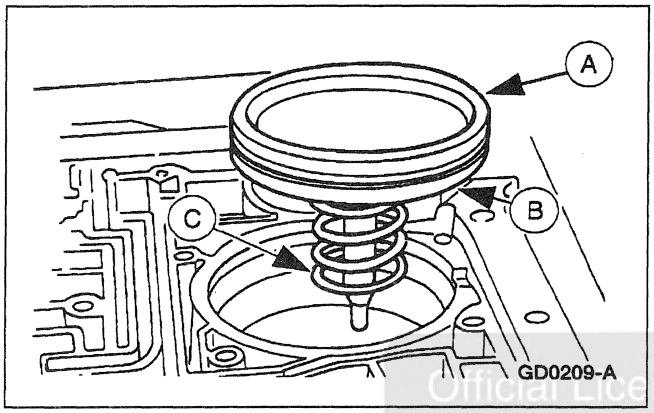

23. Remove the (A) reverse band servo cover (7D036), (B) reverse band servo piston and rod (7D189) and (C) reverse band servo spring (7D031).

Official Licensed Product
Ford Motor Company

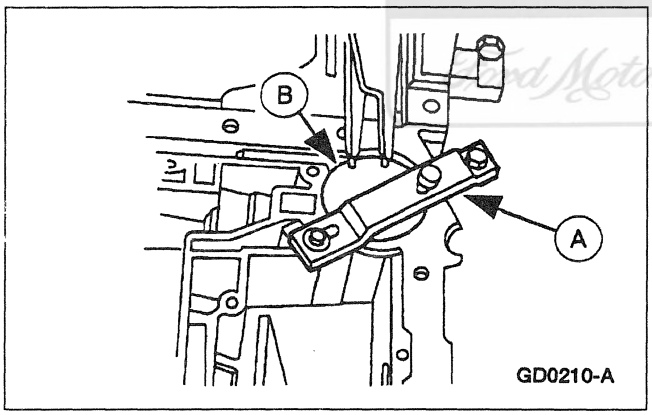

24. Use (A) Servo Piston Remover Replacer to compress the 1-2 accumulator cover and remove the (B) 1-2 accumulator piston retaining ring (7384).

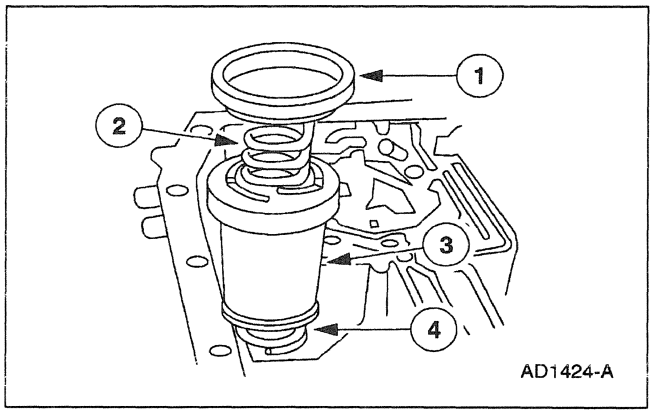

25. Remove the 1-2 accumulator upper spring.
    1 Remove the 1-2 accumulator spring cover.
    2 Remove the 1-2 accumulator lower spring.
    3 Remove the 1-2 accumulator.
    4 Remove the 1-2 accumulator upper spring.

DISASSEMBLY (Continued)

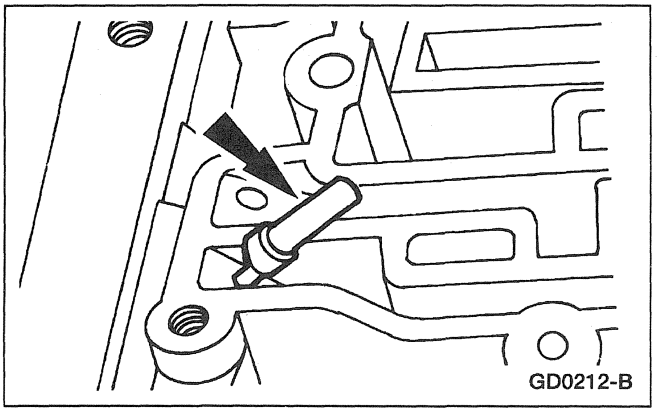

26. Remove the fluid screen.

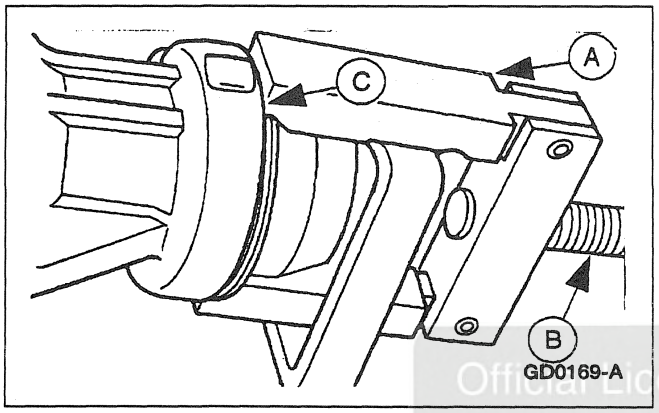

27. Use (A) the Seal Remover and (B) the Impact Slide Hammer to remove the (C) extension housing seal.

Official Licensed Product

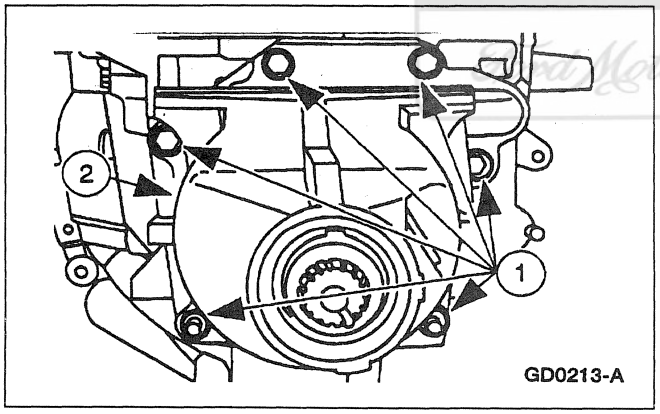

28. **NOTE:** These bolts have been coated with a sealant. High break torque may be required to remove these bolts.

    Remove the extension housing.

    1 Remove the four bolts and two nuts.

    2 Remove the extension housing (7A039) and the extension housing gasket (7086).

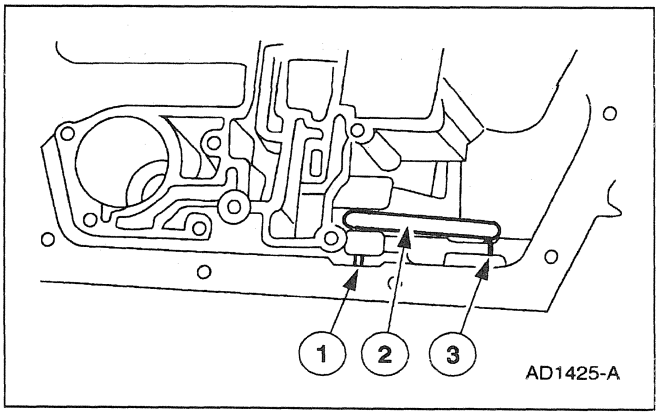

29. Remove the parking pawl (7A441).

    1 Remove the parking pawl shaft (7D071).

    2 Remove the parking pawl return spring (7D070).

    3 Remove the parking pawl.

DISASSEMBLY (Continued)

30. Rotate transmission to the vertical position with the output shaft toward floor.

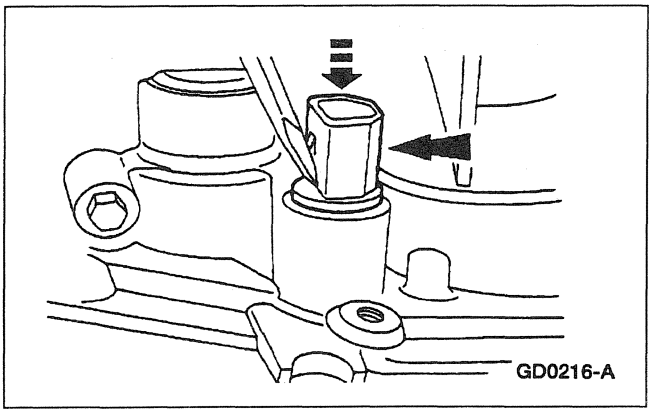

31. ⚠ **CAUTION: Extreme care must be taken during transmission connector removal. Do not pull on wires, or use a hammer on the connector body.**

    Place a screwdriver on the flat portion of the connector and push the connector out through the bottom of the case (7005).

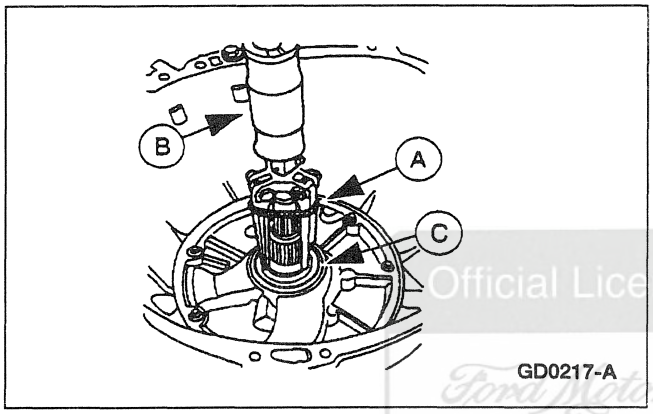

32. Use (A) the Seal Remover and (B) the Impact Slide Hammer to remove the (C) front pump seal.

Official Licensed Product
Ford Motor Company

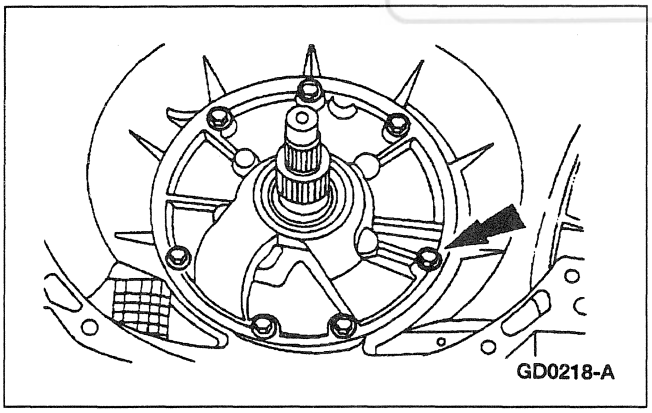

33. **NOTE:** These bolts have been coated with sealant. High break torque may be required to remove the bolts.

    Remove the pump body bolts.

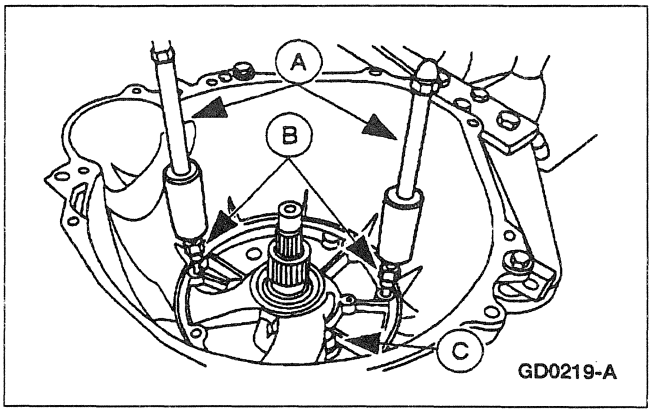

34. Use two (A) Impact Slide Hammers and (B) Pump Puller Adapters to remove the (C) front pump support.

DISASSEMBLY (Continued)

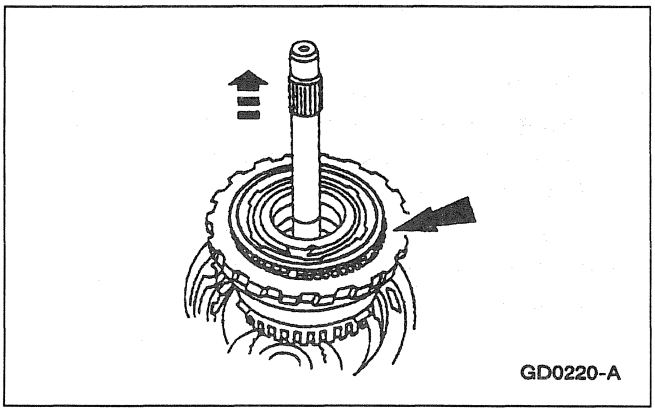
GD0220-A

35. Remove and discard the pump gasket.

36. ⚠ **CAUTION: Remove the assembly carefully to prevent damage to the overdrive band friction material by the reverse clutch drive lugs.**

    Remove the following components as an assembly:

    - intermediate clutch pack.
    - intermediate one-way clutch.
    - reverse clutch.
    - forward clutch assembly.

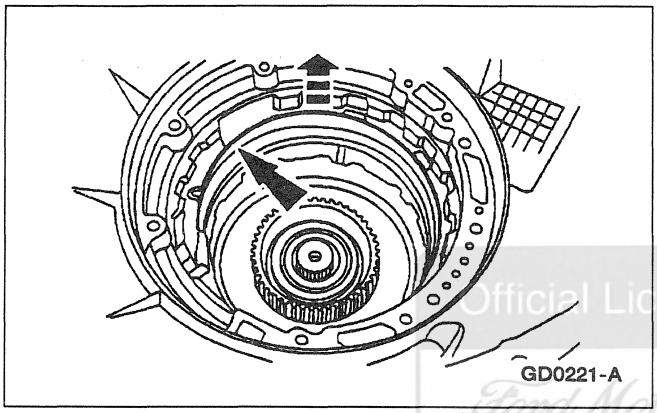
GD0221-A

37. Disengage and remove the overdrive band (7F196).

Official Licensed Product
Ford Motor Company

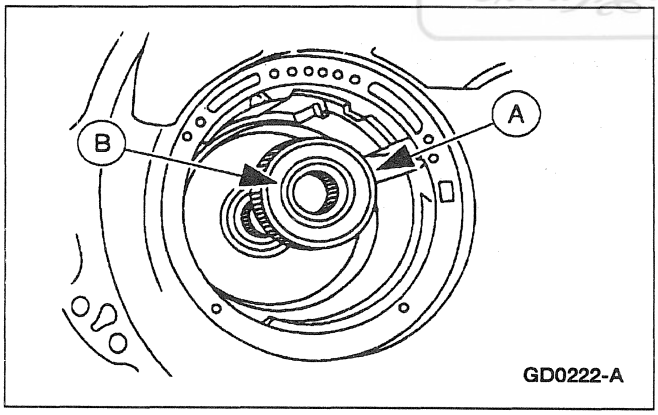

GD0222-A

38. Remove the (A) forward clutch hub and the (B) No. 3 forward clutch hub front bearing (7F231).

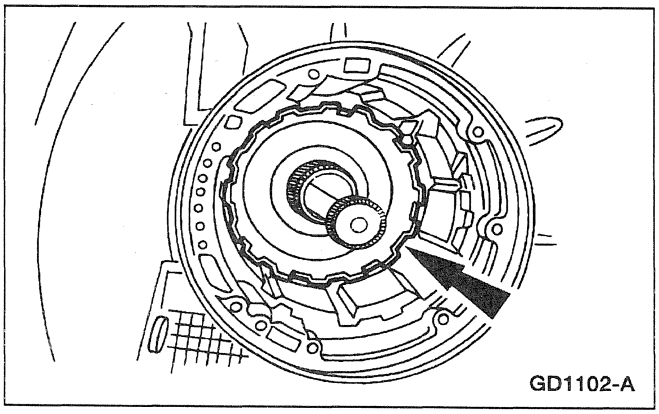
GD1102-A

39. Remove the intermediate stub shaft.

DISASSEMBLY (Continued)

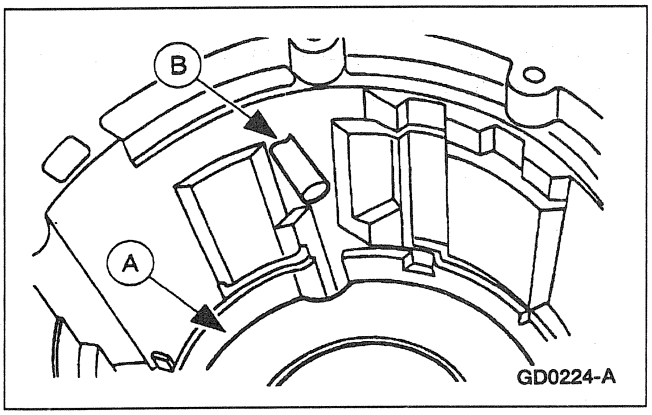

40. Rotate the (A) reverse sun gear to align with the (B) overdrive band anchor pin (7F295).

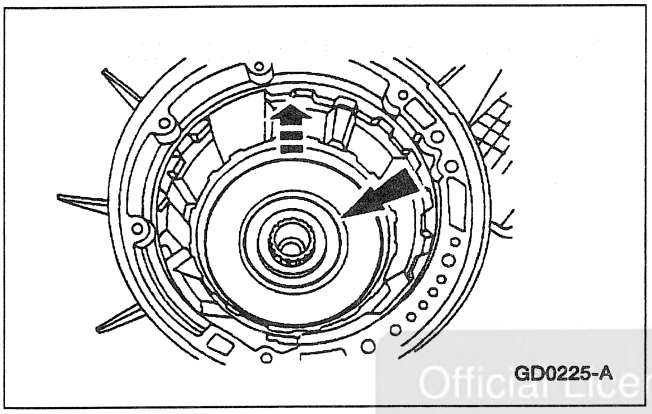

41. Remove the following components as an assembly:
    - Forward clutch sun gear.
    - No. 5 forward clutch sun gear bearing.
    - Reverse clutch sun gear.
    - No. 4 forward clutch hub bearing.

Official Licensed Product
Ford Motor Company

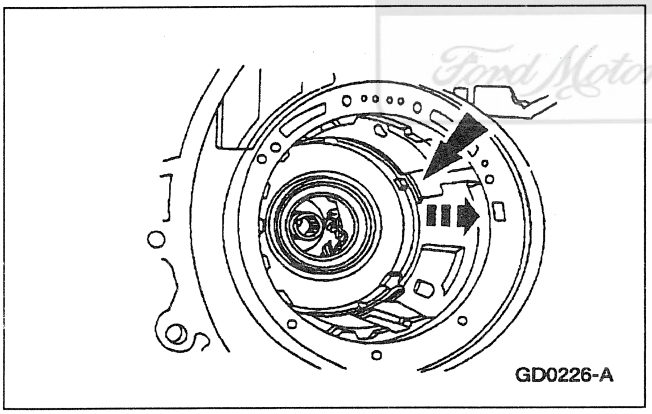

42. Remove the center support retaining ring and note location for assembly.

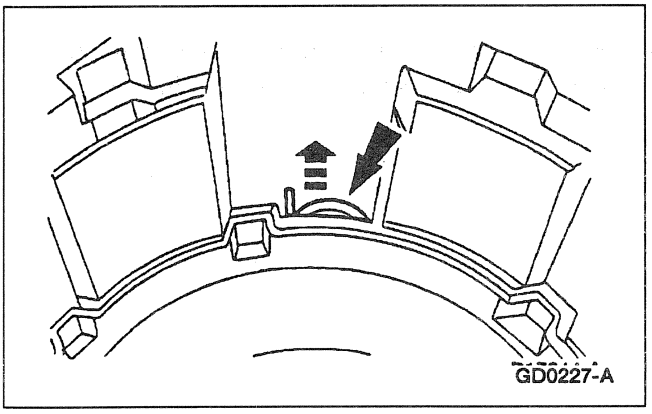

43. Remove the case to planet support spring.

DISASSEMBLY (Continued)

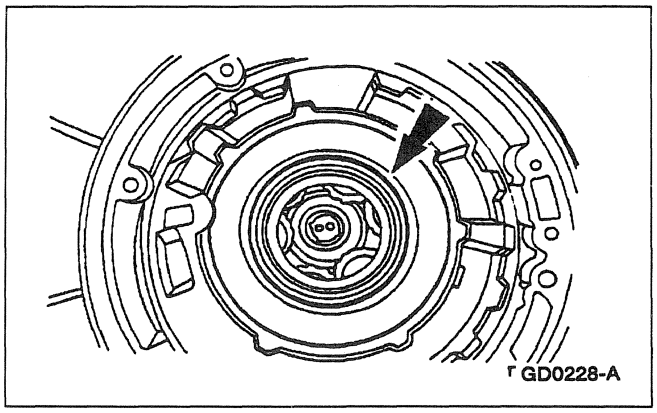

44. Remove the planetary gear support and planetary as an assembly.

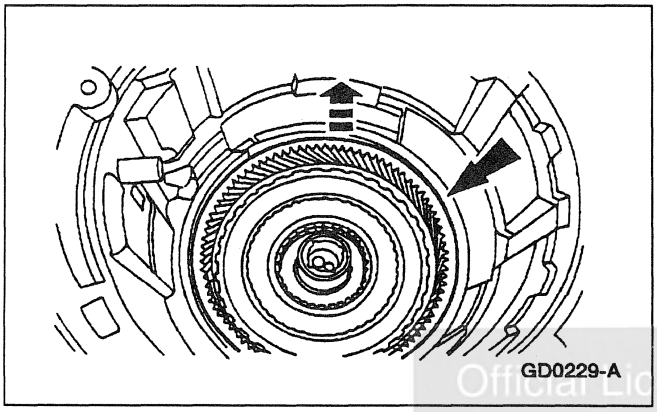

45. Remove the reverse clutch band (7D095).

Official Licensed Product
Ford Motor Company

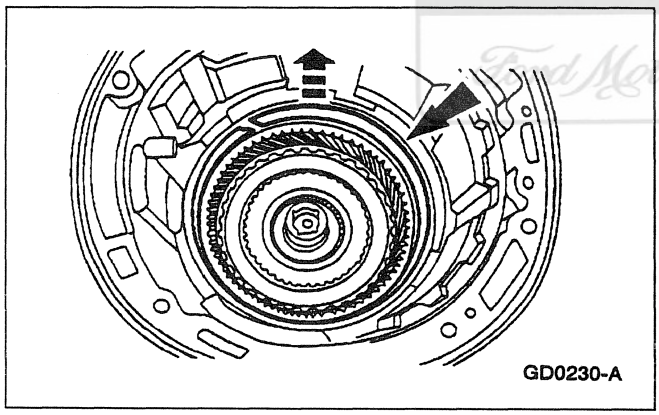

46. Remove the retaining ring.

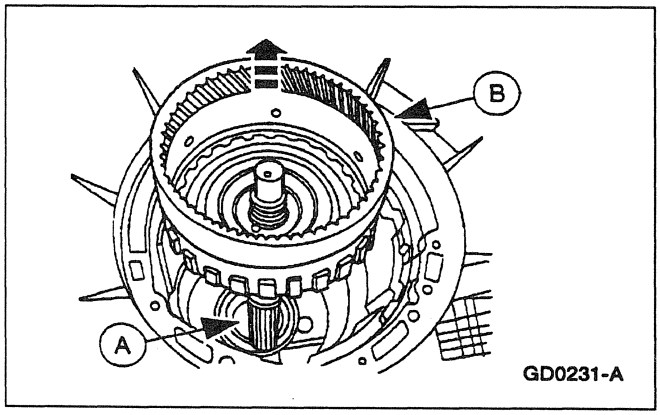

47. Remove the (A) output shaft (7060) and the (B) output shaft ring gear assembly and direct clutch.

DISASSEMBLY (Continued)

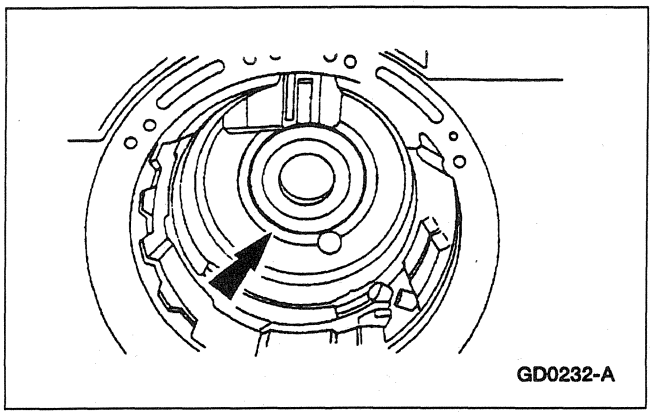
GD0232-A

48. Remove the No. 9 case rear bearing (7F242).

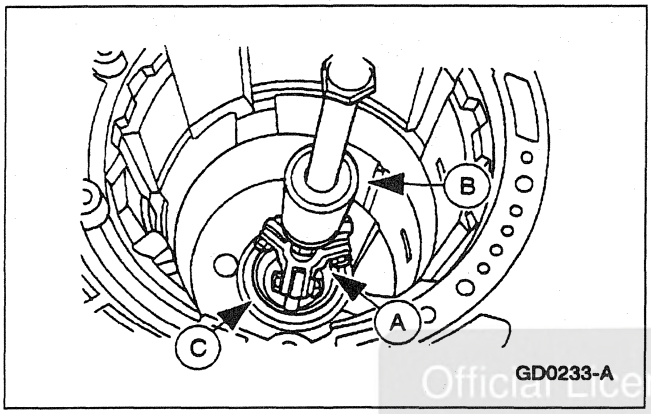

GD0233-A

49. Inspect and if necessary, use (A) Bearing Cup Puller and (B) Impact Slide Hammer to remove the (C) rear case bushing.

Official Licensed Product
Ford Motor Company

DISASSEMBLY AND ASSEMBLY OF SUBASSEMBLIES

Main Control Valve Body

Disassembly

Main Control Valve Body — Disassembled View

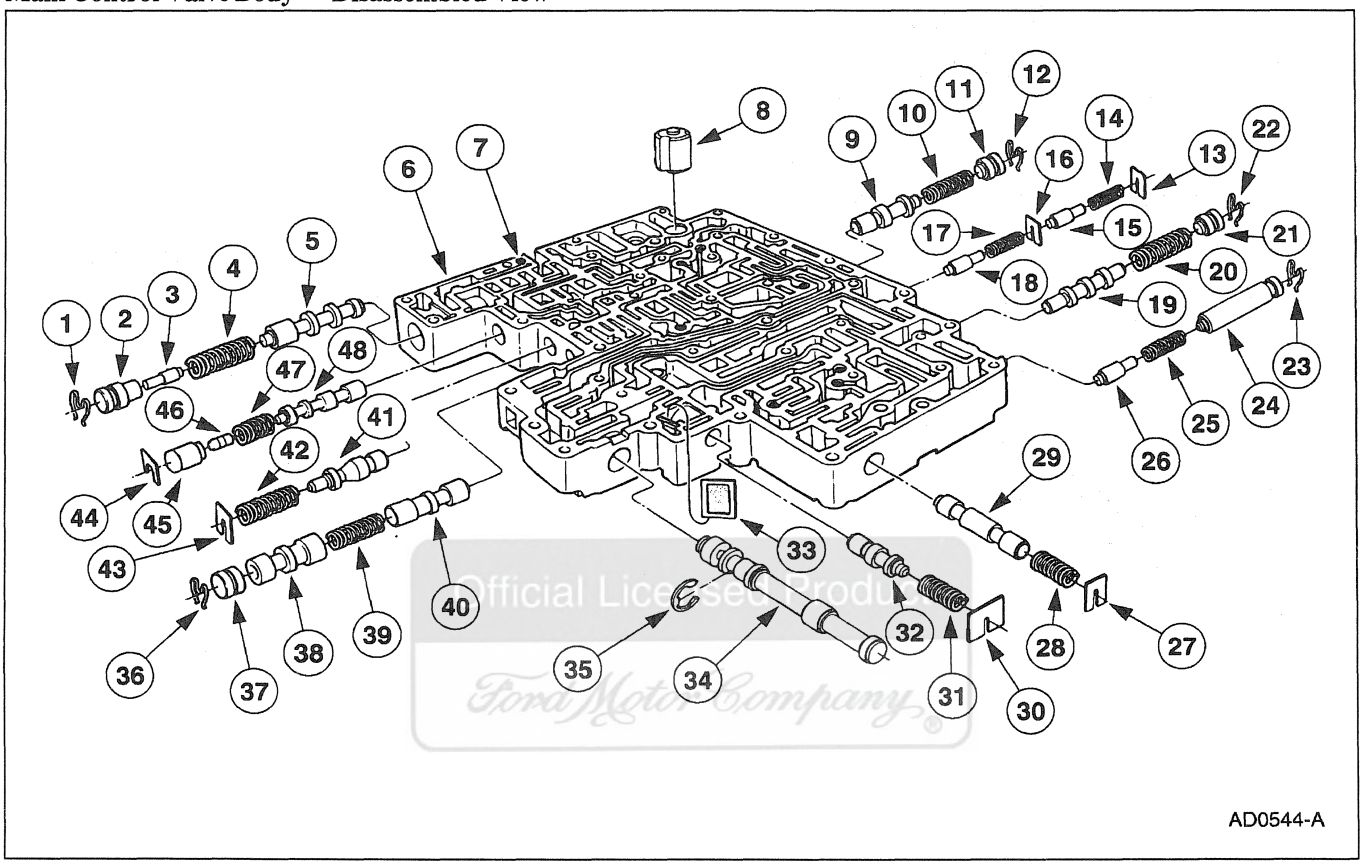

Item	Part Number	Description
1	—	Valve Plug Retainer (Part of 7A100)
2	—	Main Pressure Booster Valve Sleeve (Part of 7A100)
3	—	Main Pressure Booster Valve (Part of 7A100)
4	—	Main Pressure Regulator Valve Spring (Part of 7A100)
5	—	Main Regulator Valve (Part of 7A100)
6	7A100	Main Control Valve Body Assembly
7	7E195	Checkball (8 Req'd)
8	7H171	Converter Drain Back Valve
9	—	Pressure Regulator Valve (Part of 7A100)

(Continued)

Item	Part Number	Description
10	—	Pressure Regulator Valve Spring (Part of 7A100)
11	—	Valve Retainer Plug (Part of 7A100)
12	—	Valve Plug Retainer (Part of 7A100)
13	—	Spring Retaining Plate (Part of 7A100)
14	—	Capacity Modulator Valve Spring (Part of 7A100)
15	—	Capacity Modulator Valve (Part of 7A100)
16	—	Spring Retaining Plate (Part of 7A100)
17	—	Capacity Modulator Valve Spring (Part of 7A100)

(Continued)

DISASSEMBLY AND ASSEMBLY OF SUBASSEMBLIES (Continued)

Item	Part Number	Description
18	—	Capacity Modulator Valve (Part of 7A100)
19	—	3-4 Shift Valve (Part of 7A100)
20	—	3-4 Shift Valve Spring (Part of 7A100)
21	—	Valve Retainer Plug (Part of 7A100)
22	—	Valve Plug Retainer (Part of 7A100)
23	—	Valve Plug Retainer (Part of 7A100)
24	—	Valve Retainer Plug (Part of 7A100)
25	—	Capacity Modulator Valve Spring (Part of 7A100)
26	—	Capacity Modulator Valve (Part of 7A100)
27	—	Spring Retainer Plate (Part of 7A100)
28	—	Spring 2-3 Backout Valve (Part of 7A100)
29	—	Valve (Part of 7A100)
30	—	Spring Retainer Plate (Part of 7A100)
31	—	Pressure Regulator Valve Spring (Part of 7A100)
32	—	Pressure Regulator Valve (Part of 7A100)

(Continued)

Item	Part Number	Description
33	—	Solenoid Screen
34	—	Control Manual Valve (Part of 7A100)
35	—	Retaining Ring (Part of 7A100)
36	—	Valve Plug Retainer (Part of 7A100)
37	—	Valve Retaining Plug (Part of 7A100)
38	—	2-3 Shift Valve (Part of 7A100)
39	—	2-3 Shift Valve Spring (Part of 7A100)
40	—	1-2 Shift Valve (Part of 7A100)
41	—	Pressure Regulator Valve (Part of 7A100)
42	—	Pressure Regulator Valve Spring (Part of 7A100)
43	—	Spring Retaining Plate (Part of 7A100)
44	—	Control Valve Plate (Part of 7A100)
45	—	Bypass Clutch Control Plunger Sleeve (Part of 7A100)
46	—	Bypass Clutch Control Valve Plunger (Part of 7A100)
47	—	Bypass Clutch Control Valve Spring (Part of 7A100)
48	—	Bypass Clutch Control Valve (Part of 7A100)

Official Licensed Product Ford Motor Company

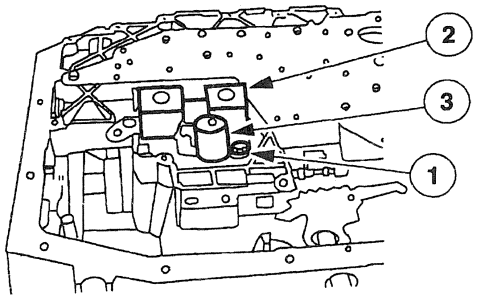

AD0545-B

1. Remove the torque converter clutch solenoid (TCC solenoid)(7G136) and the shift solenoid (7G484).
   1 Remove the bolt.
   2 Remove the shift solenoid.
   3 Remove the torque converter clutch solenoid.

DISASSEMBLY AND ASSEMBLY OF SUBASSEMBLIES (Continued)

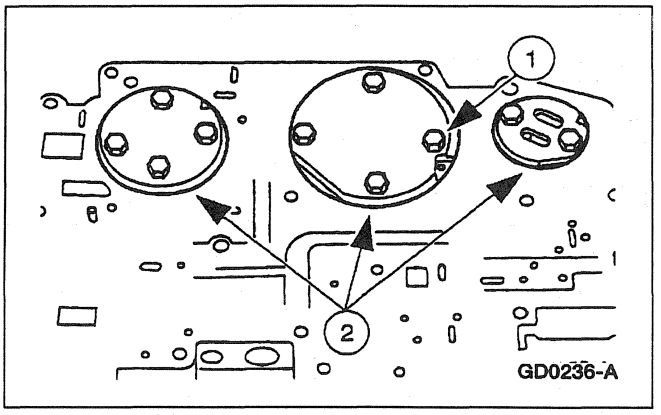

2. Remove the three reinforcement plates.
   1 Remove the bolts.
   2 Remove the plates.

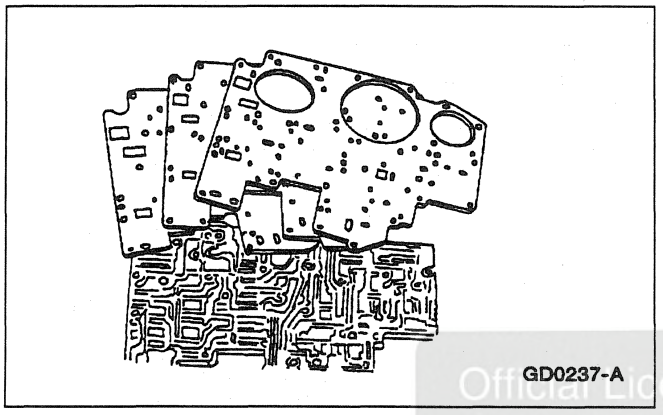

3. Remove the separator plate and discard the gaskets.

Official Licensed Product
Ford Motor Company

DISASSEMBLY AND ASSEMBLY OF SUBASSEMBLIES (Continued)

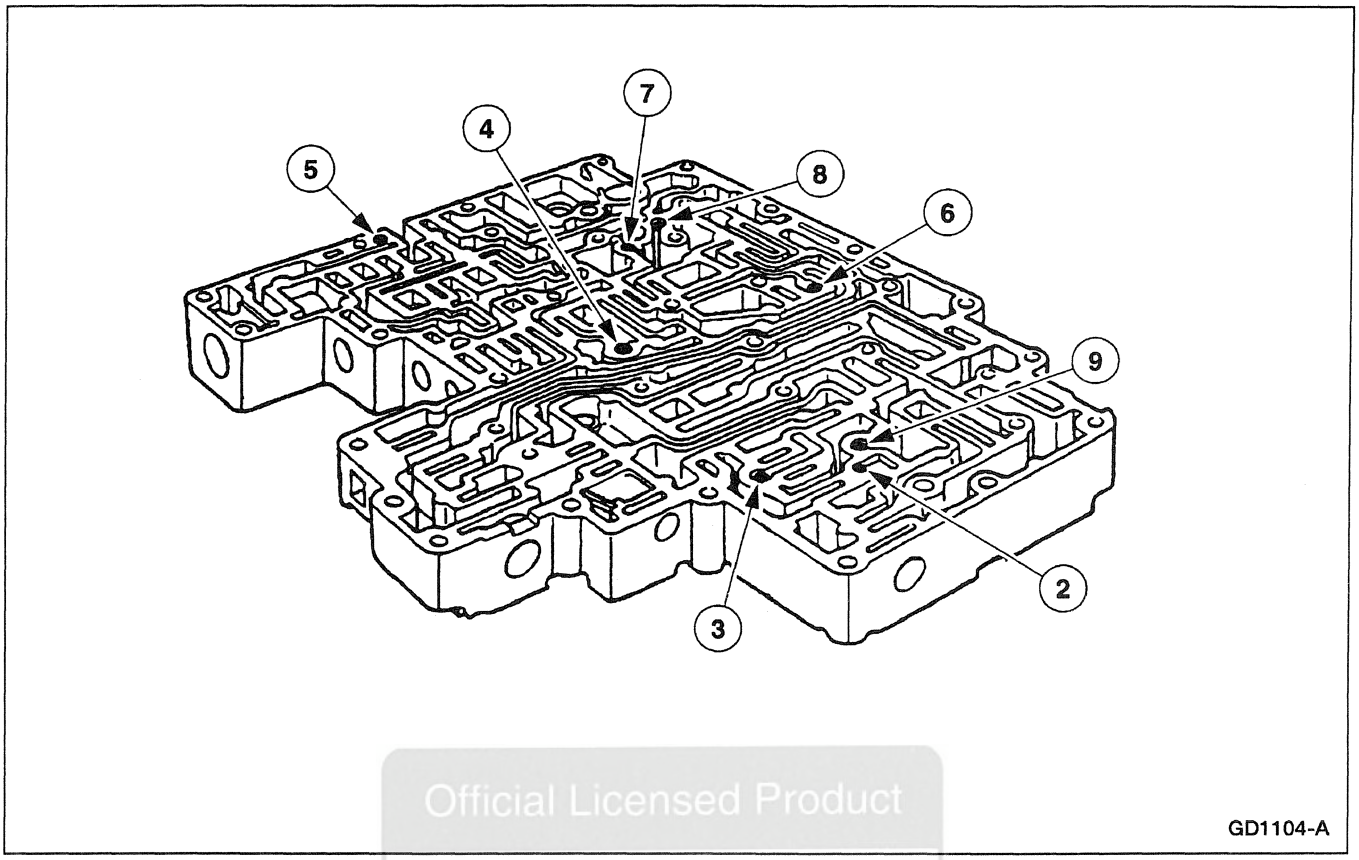

Official Licensed Product
Ford Motor Company

4. **NOTE:** Note the location of the eight coasting booster valve shuttle balls (7E195) for assembly.

   Remove the eight coasting booster valve shuttle balls.

DISASSEMBLY AND ASSEMBLY OF SUBASSEMBLIES (Continued)

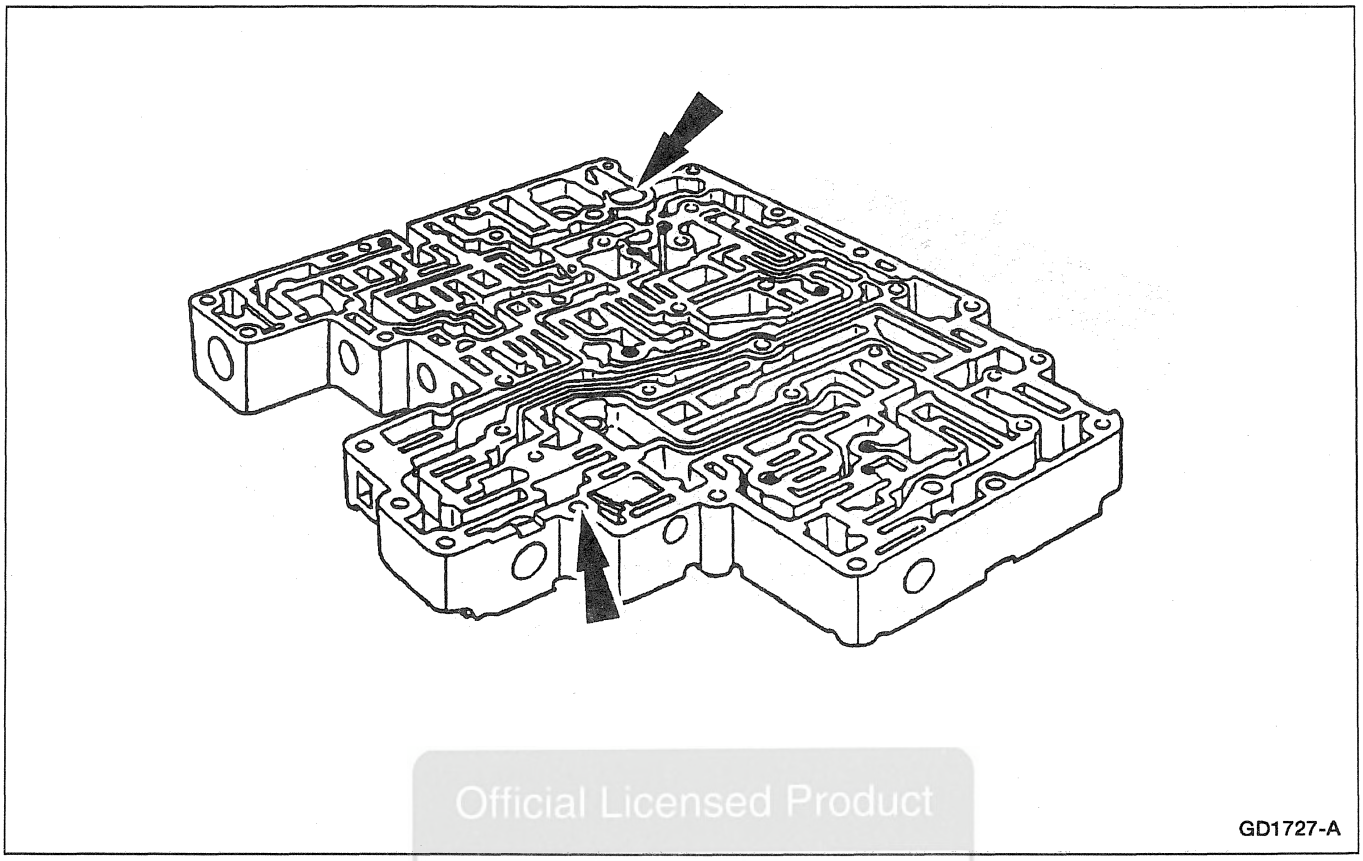

Official Licensed Product
Ford Motor Company

5. Remove the converter drain back valve and solenoid pressure supply screen.

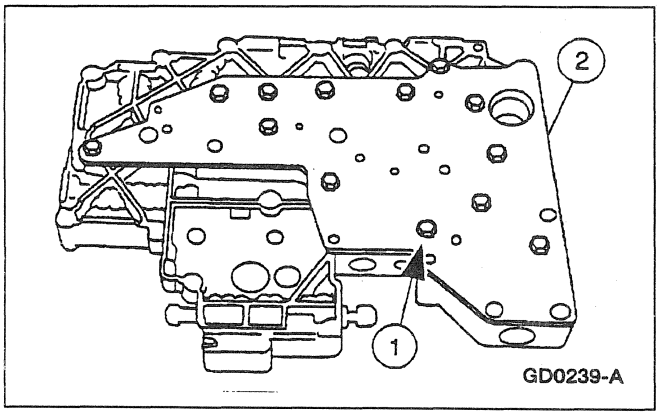

6. Remove the main control valve body cover plate.
   1 Remove the thirteen bolts.
   2 Remove the valve body cover plate and gasket.

DISASSEMBLY AND ASSEMBLY OF SUBASSEMBLIES (Continued)

Assembly

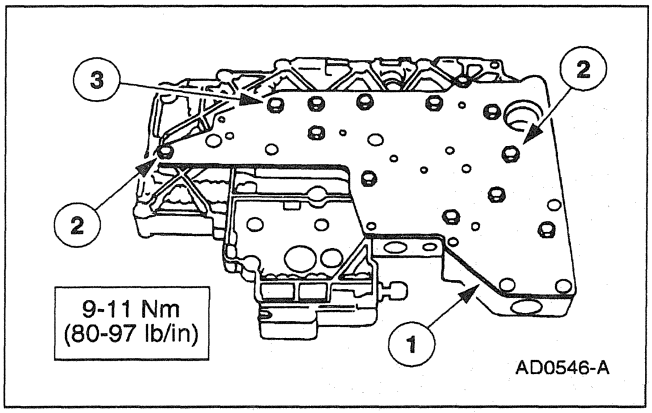

1. **NOTE:** Before beginning assembly, perform/inspect the following:

   When building up subassemblies and assembling the transmission, ALWAYS use new gaskets and seals.

   All fasteners must be tightened to the torque specification indicated. In addition to appearing in the section, the necessary torques can be found in the General Specifications Chart.

   When building up subassemblies, each component part should be lubricated with clean transmission fluid. It is also good practice to lubricate the subassemblies as they are installed in the case (7005).

   Needle bearings, thrust washers and seals should be lightly coated with petroleum jelly during subassembly buildup or transmission assembly.

   Many components and surfaces in the transmission are precision machined. Careful handling during disassembly, cleaning, inspection and assembly can prevent unnecessary damage to machined surfaces.

   Install the valve body cover plate.

   1 Position the valve body cover plate gasket and cover plate.

   2 Install the bolts.

   3 Install the bolts.

Official Licensed
Ford Motor Company

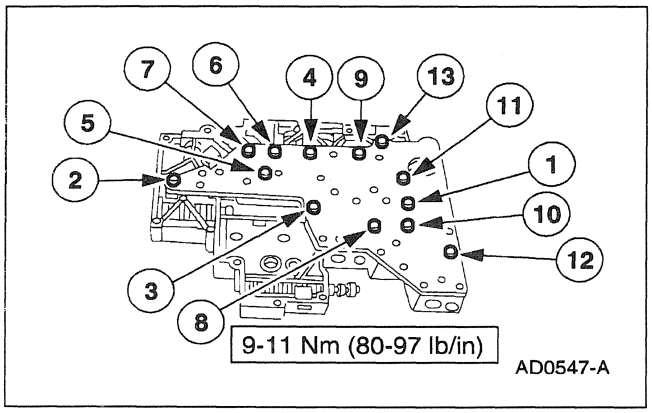

2. Tighten the bolts in the sequence shown.

DISASSEMBLY AND ASSEMBLY OF SUBASSEMBLIES (Continued)

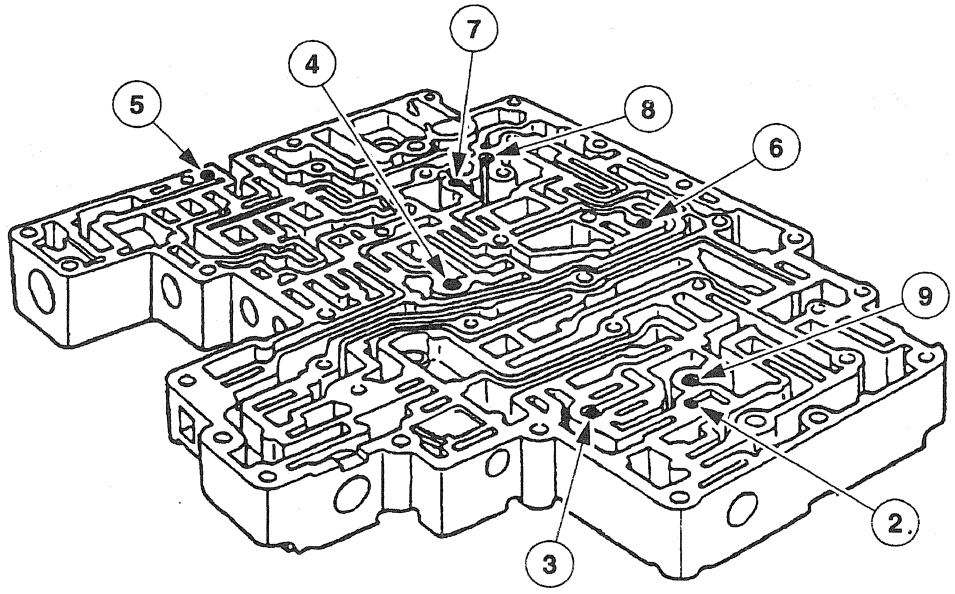

GD1104-A

Official Licensed Product
Ford Motor Company

3. Install the eight coasting booster valve shuttle balls.

DISASSEMBLY AND ASSEMBLY OF SUBASSEMBLIES (Continued)

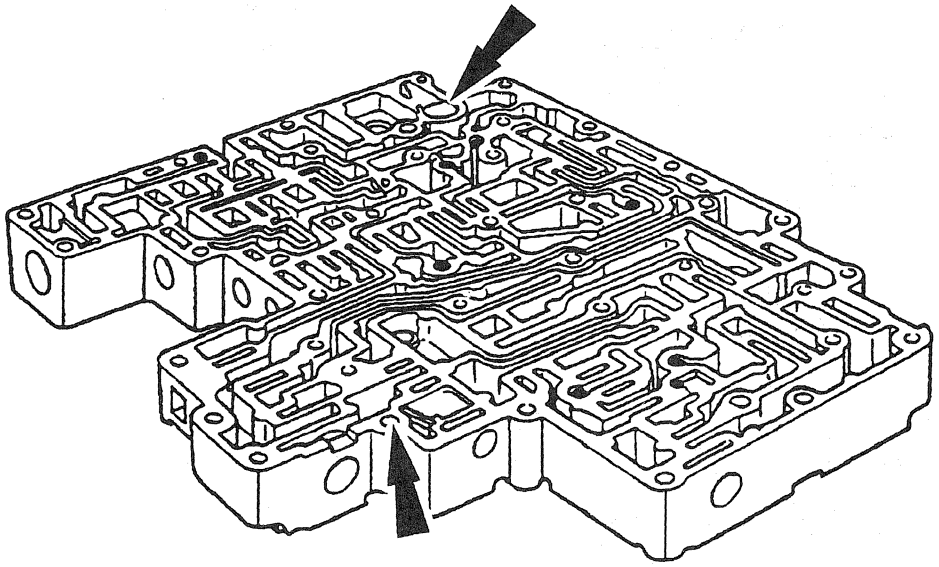

GD1727-A

Official Licensed Product
Ford Motor Company

4. Install the converter drain back valve and solenoid pressure supply screen.

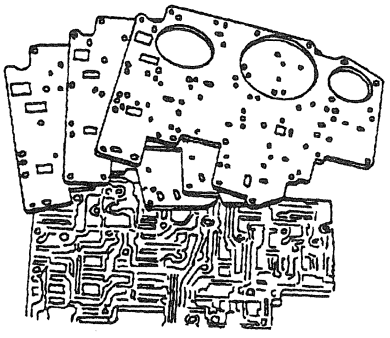

GD0237-A

5. Install the separator plate and gaskets.

DISASSEMBLY AND ASSEMBLY OF SUBASSEMBLIES (Continued)

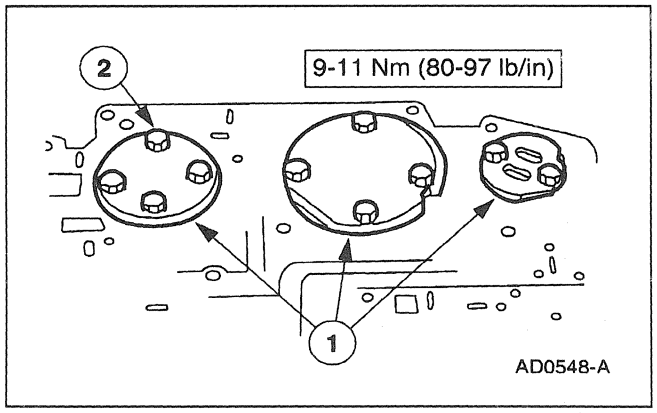

6. Install the three reinforcement plates.
   1 Position the plates.
   2 Install the bolts.

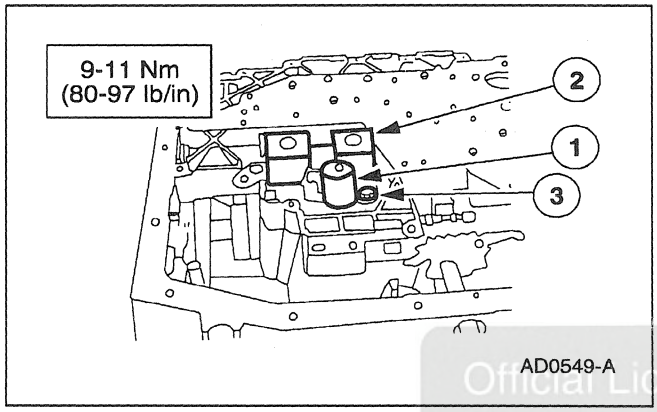

7. **NOTE:** Inspect the shift solenoid O-rings and TCC solenoid O-rings for damage.
   Install the shift solenoid.
   1 Position the shift solenoid.
   2 Position the TCC solenoid.
   3 Install the bolt.

Official Licensed Product
Ford Motor Company

Pump and Intermediate Clutch Piston

Special Tool(s)

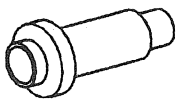 ST1189-A	Front Pump Seal Replacer 307-014 (T63L-77837-A)
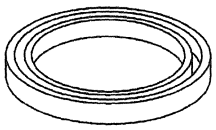 ST1914-A	Intermediate Clutch Piston Seal Protector 307-339 (T95L-77005-A)

DISASSEMBLY AND ASSEMBLY OF SUBASSEMBLIES (Continued)

Pump and Intermediate Clutch Piston — Disassembled View

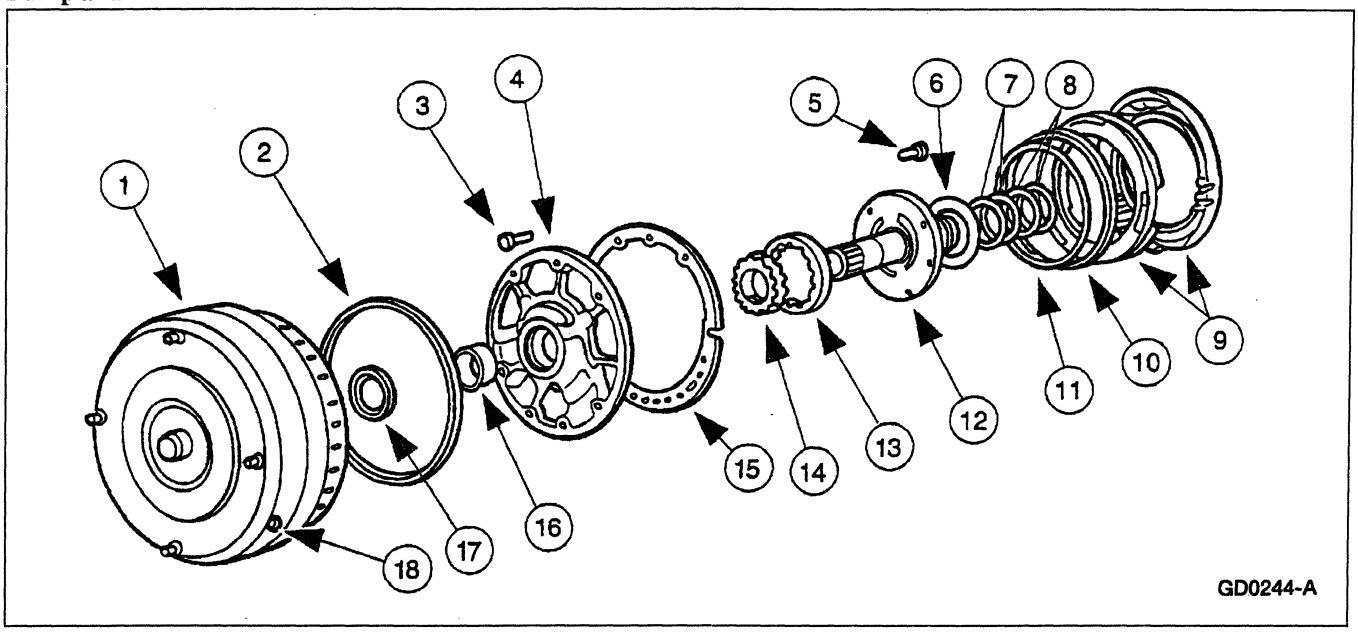

Item	Part Number	Description
1	7902	Torque Converter
2	7A248	Front Pump O-Ring
3	N605789-S100	Bolt
4	—	Pump Body Assembly
5	N605787-S	Front Pump Support Bolt
6	7D014	No. 1 Pump Support Thrust Washer
7	7D020	Reverse Clutch Cylinder Seal
8	7D019	Forward Clutch Cylinder Seal
9	7E005	Intermediate Clutch Piston
10	7F224	Intermediate Clutch Piston Outer Seal
11	7F225	Intermediate Clutch Piston Inner Seal
12	7A108	Pump Support
13	—	Pump Outer Gerotor Gear
14	—	Pump Inner Gerotor Gear
15	7A136	Pump Gasket
16	7B258	Pump Bushing
17	7A248	Pump Inner Seal
18	87650-S2	Converter Drain Plug

(Continued)

Original Licensed Product

Disassembly

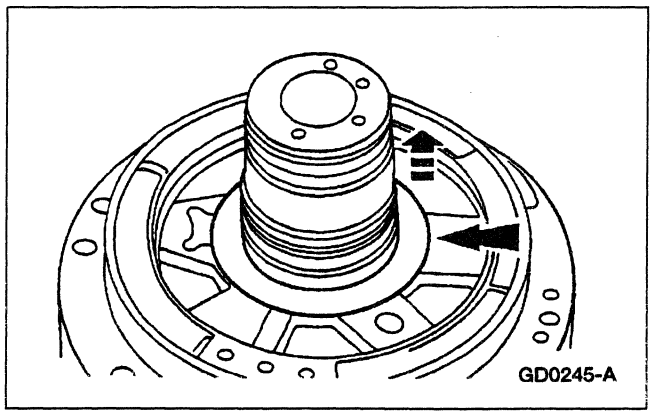

1. Remove the No. 1 pump support thrust washer.

DISASSEMBLY AND ASSEMBLY OF SUBASSEMBLIES (Continued)

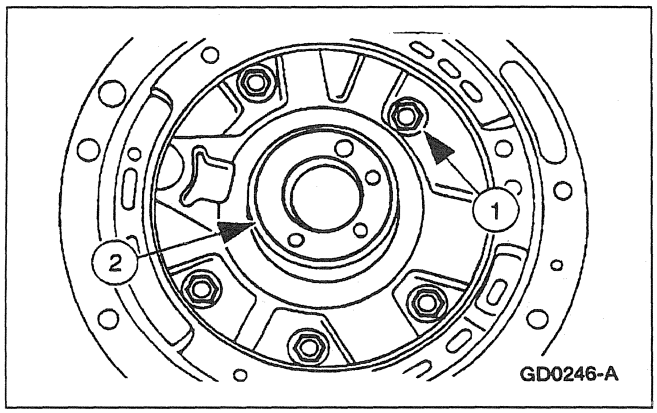

2. Remove the front pump support (7A108).
   1 Remove the bolts.
   2 Remove the front pump support.

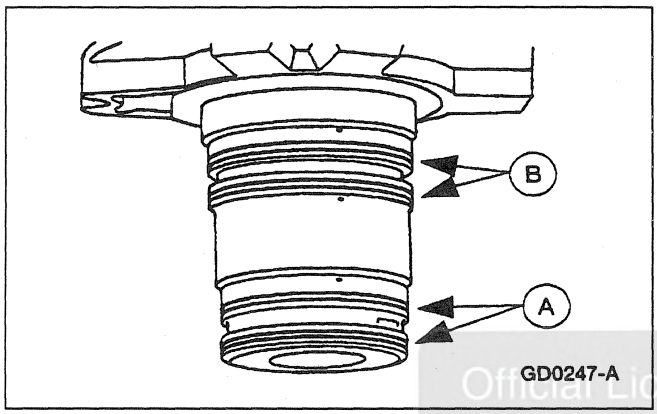

3. **NOTE:** The reverse clutch cylinder seals (7D020) are larger than the forward clutch cylinder rings.

   Remove the two (A) reverse clutch cylinder seals and the two (B) forward clutch cylinder seals.

Official Licensed Product

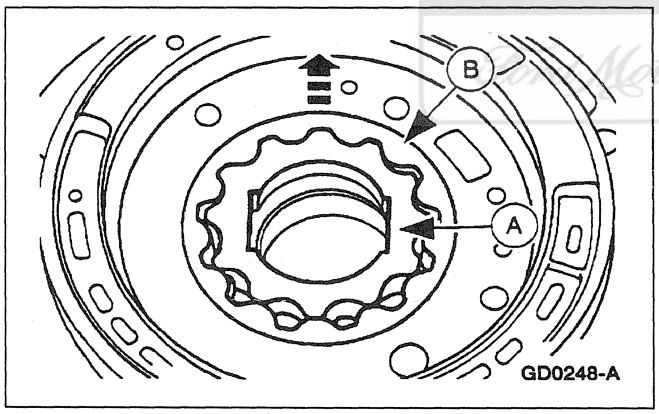

4. Remove the (A) inner and (B) outer pump gerotor gears.

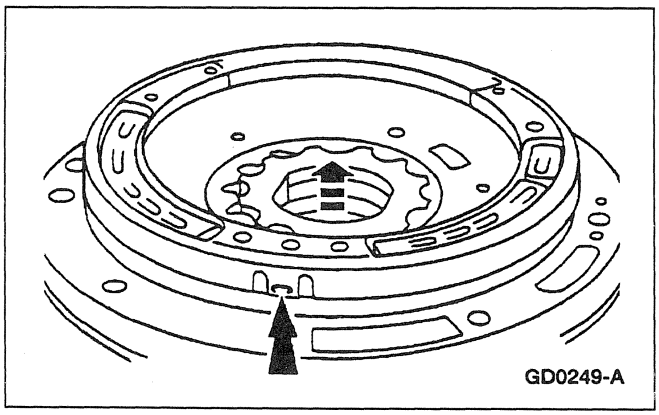

5. Carefully pry spring retainer tabs and remove the spring retainer assembly.

DISASSEMBLY AND ASSEMBLY OF SUBASSEMBLIES (Continued)

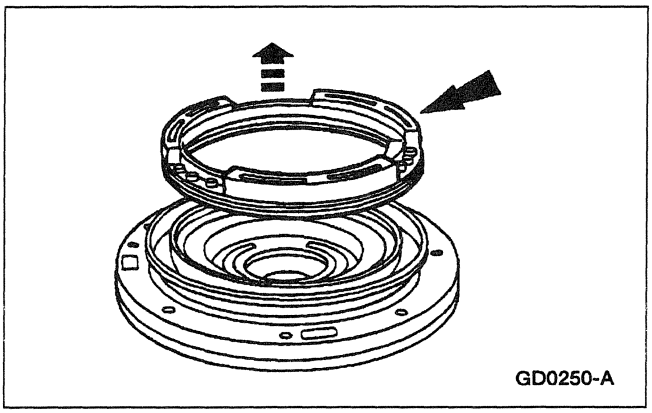

6. Remove the intermediate clutch piston (7E005).

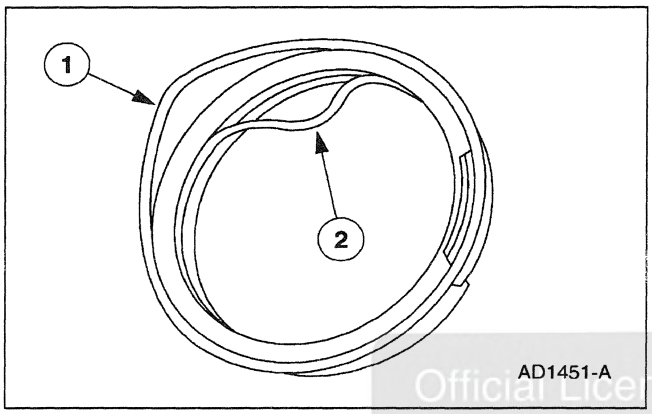

7. Replace the clutch piston seals.
   1 Remove the intermediate clutch piston inner seal.
   2 Remove the intermediate clutch piston inner seal (7F225).

Official Licensed Product
Ford Motor Company

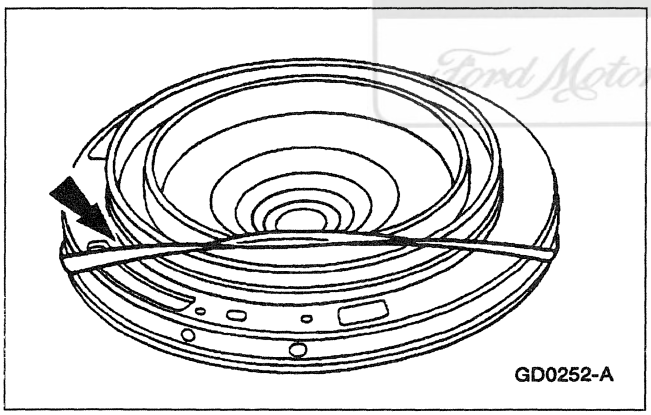

8. Remove and discard the front pump seal.

Assembly

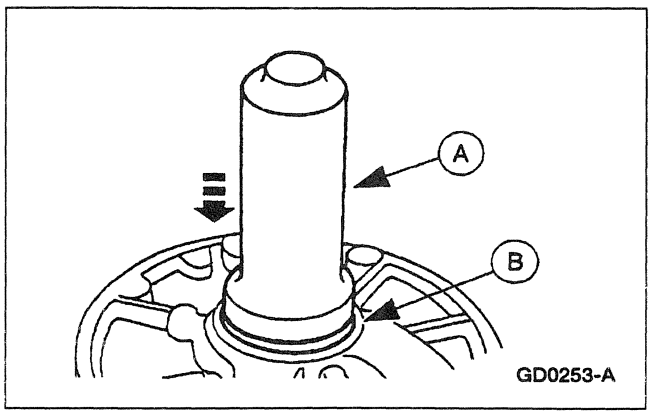

1. Use (A) Front Pump Seal Replacer to install the (B) front pump seal assembly.

DISASSEMBLY AND ASSEMBLY OF SUBASSEMBLIES (Continued)

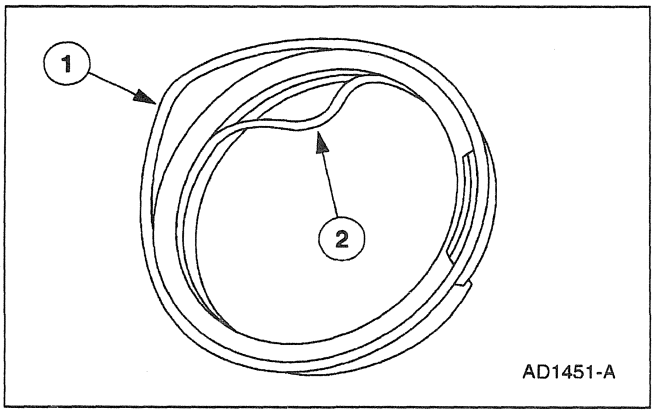

2. Install the clutch piston seals.
   1 Install the intermediate clutch piston outer seal (7F224).
   2 Install the intermediate clutch piston inner seal.

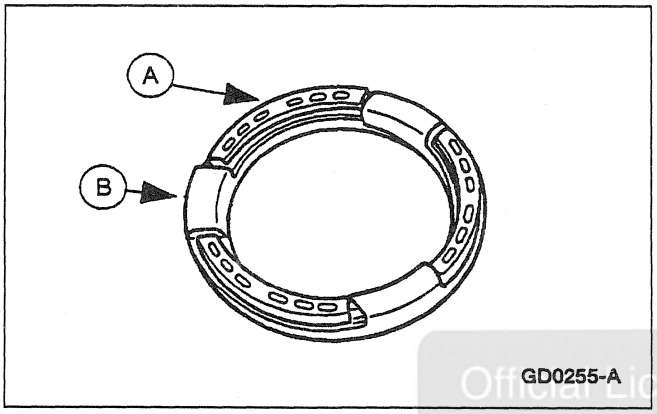

3. **NOTE:** Coat the intermediate clutch piston outer seal, intermediate clutch piston inner seal and pump body sealing area with petroleum jelly.
   Install the (A) intermediate clutch piston into (B) Clutch Lip Seal Protector.

Official Licensed Product
Ford Motor Company

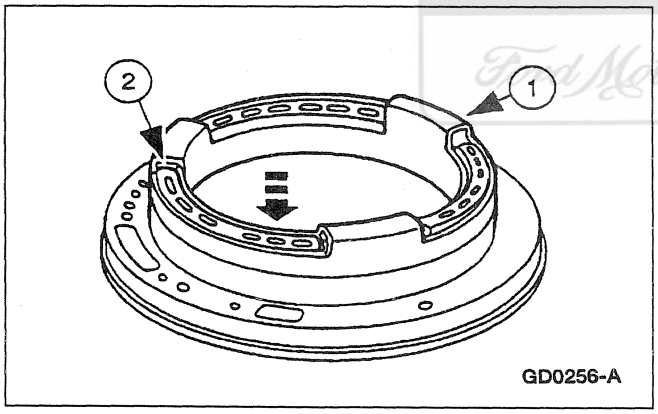

4. Install the intermediate clutch piston.
   1 Position the intermediate clutch piston and Clutch Lip Seal Protector onto the pump body.
   2 Push the intermediate clutch piston to the bottom of the pump body bore, exerting even pressure.

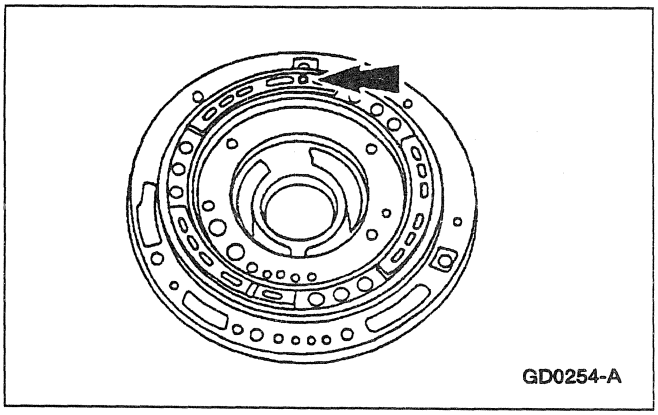

5. **⚠ CAUTION: The piston bleed hole must be located at the 12 o'clock position (towards the top of the transmission). Shift problems may occur if installed incorrectly.**
   NOTE: The piston bleed hole is the only round hole in the pump body.
   Locate the piston bleed hole.

DISASSEMBLY AND ASSEMBLY OF SUBASSEMBLIES (Continued)

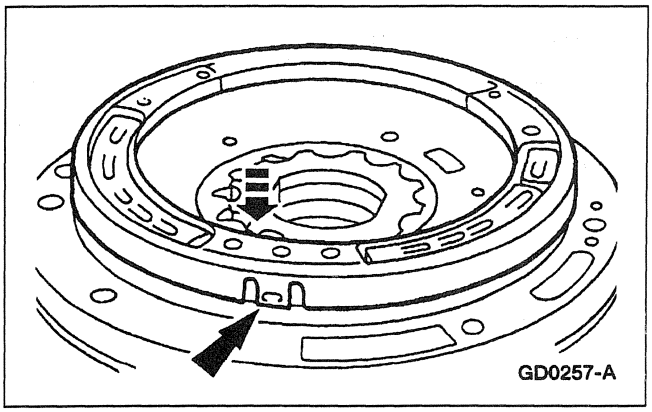

6. Install by snapping the spring retainer assembly on pump body.

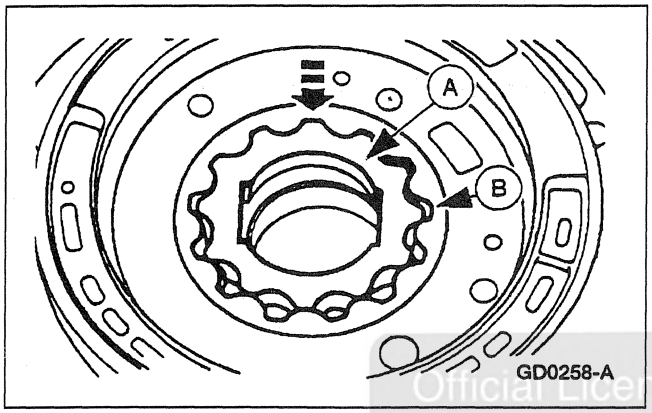

7. **NOTE:** The flats on the inner fluid pump gear have steps that must face the pump body for ease of installing the torque converter (7902).

   Install the (A) inner and (B) outer fluid pump gerotor gears.

Official Licensed Product
Ford Motor Company

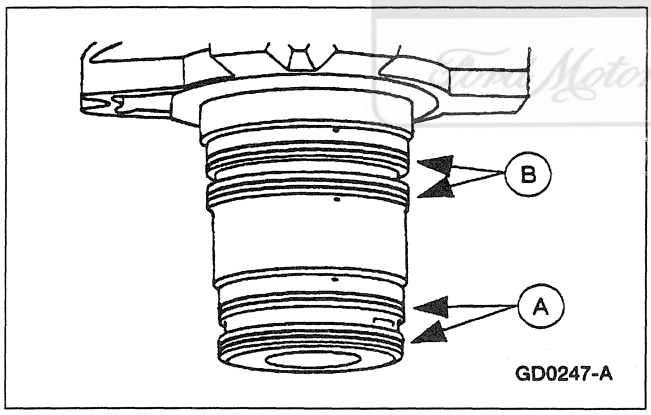

8. **NOTE:** The reverse clutch cylinder seals are larger than the forward clutch cylinder seals.

   Install the (A) reverse clutch cylinder seal and the (B) forward clutch cylinder seals.

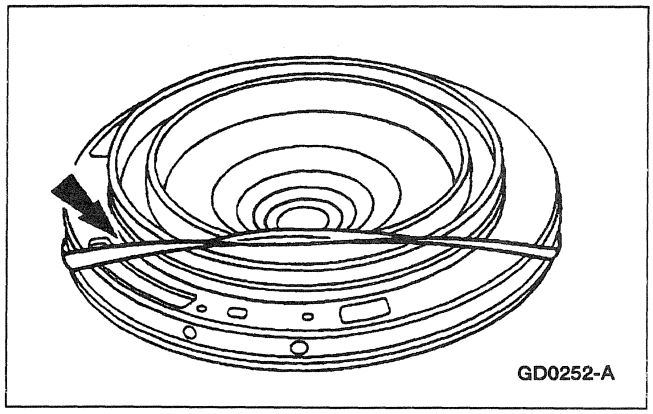

9. Install new front pump seal.

DISASSEMBLY AND ASSEMBLY OF SUBASSEMBLIES (Continued)

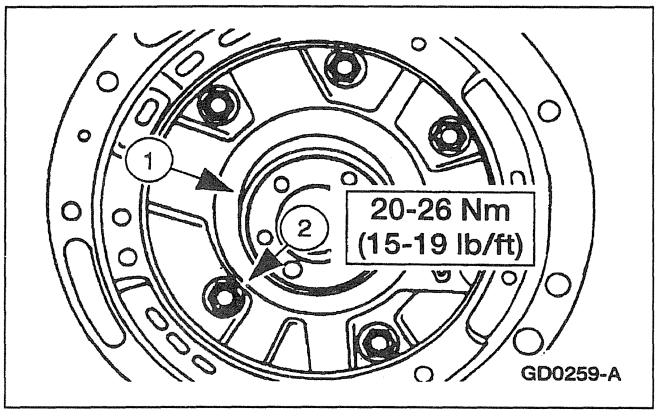

10. Assemble the front pump.
    1 Position the pump support to the pump body assembly.
    2 Install the bolts.

Intermediate Clutch Cylinder

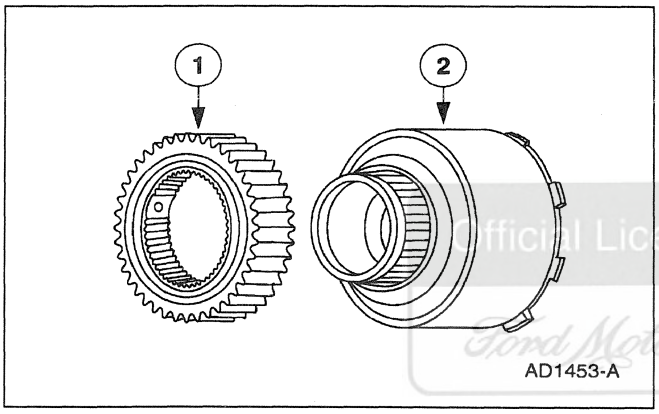

Official Licensed Product
Ford Motor Company

Item	Part Number	Description
1	7F271	Intermediate One-Way Clutch Assembly
2	7D044	Reverse Clutch Drum

Disassembly

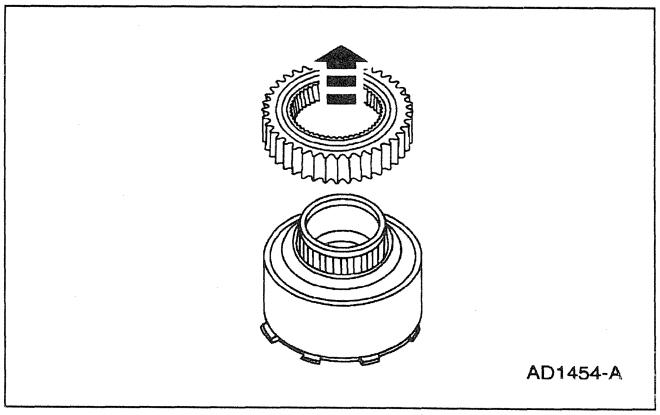

1. Lift to remove intermediate clutch hub.

DISASSEMBLY AND ASSEMBLY OF SUBASSEMBLIES (Continued)

Assembly

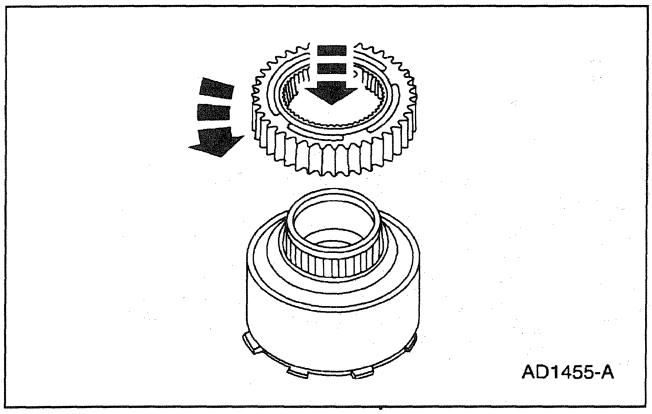

1. **NOTE:** For ease of assembly, the chamfer on the intermediate clutch hub splines should face upward.

   NOTE: The clutch hub must rotate counterclockwise when installed on the reverse clutch drum (7D044).

   Install the intermediate clutch hub.

Reverse Clutch

Special Tool(s)

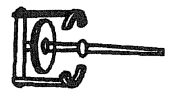 ST1190-A	Clutch Spring Compressor 307-015 (T65L-77515-A)
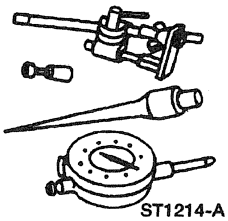 ST1214-A	Dial Indicator With Bracketry 100-002 (TOOL-4201-C) or equivalent
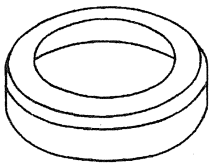 ST1207-A	Reverse Clutch Inner Seal Protector 307-085 (T80L-77403-B)

(Continued)

Special Tool(s)

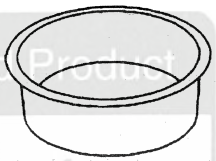 ST1206-A	Reverse Clutch Outer Seal Protector 307-084 (T80L-77403-A)
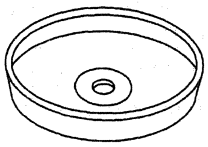 ST1198-B	Reverse Clutch Spring Compressor 307-086 (T80L-77405-A)

Official Licensed Product
Ford Motor Company

DISASSEMBLY AND ASSEMBLY OF SUBASSEMBLIES (Continued)

Reverse Clutch Disassembled View

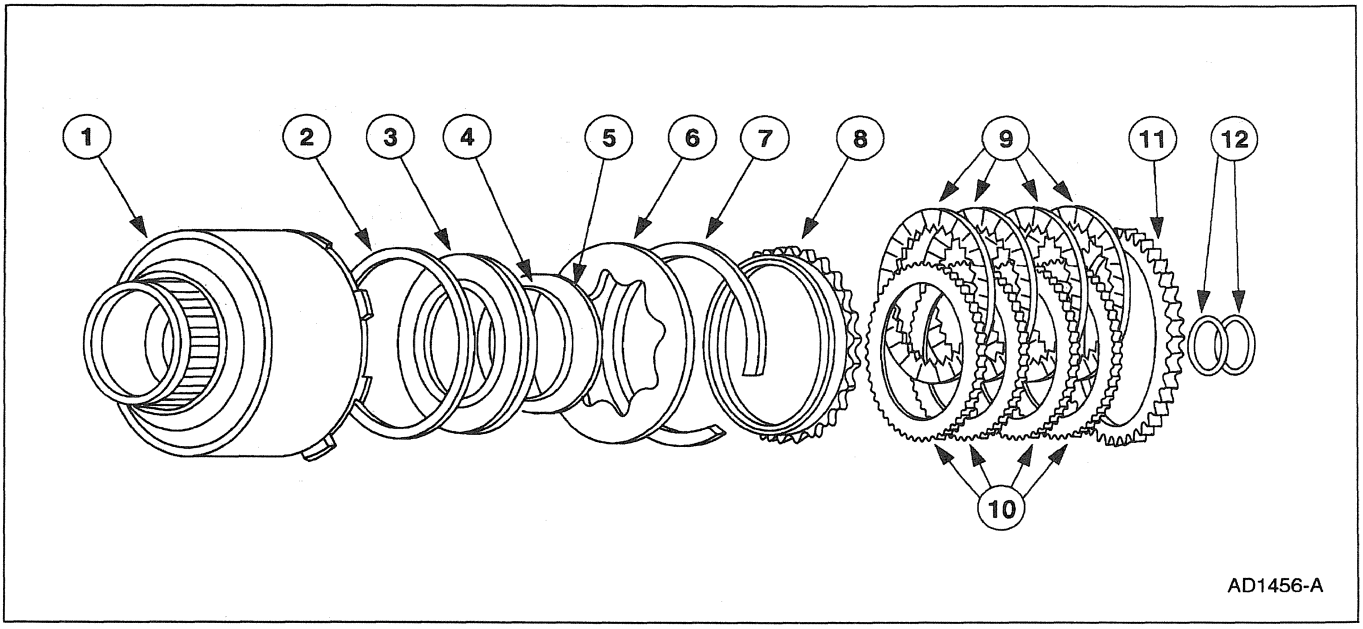

Item	Part Number	Description
1	7D044	Reverse Clutch Drum
2	7D403	Reverse Clutch Piston Outer Seal
3	7D402	Reverse Clutch Piston
4	7D404	Reverse Clutch Piston Small Seal
5	7D256	Reverse Clutch Piston Spring Pressure Ring
6	7B070	Reverse Clutch Piston Spring
7	7A577	Reverse Clutch Piston Spring Ring
8	7B066	Reverse Clutch Front Pressure Plate
9	7B442	Reverse Clutch External Spline Plate (Steel)
10	7B164	Reverse Clutch Internal Spline Plates (Friction)
11	7B066	Reverse Clutch Rear Pressure Plate
12	7A166	No. 2 Forward Clutch Bearing

(Continued)

Disassembly

1. Inspect clutch cylinder thrust surfaces, piston bore and clutch plate serrations for scores or burrs. Minor scores or burrs may be removed with crocus cloth. Replace clutch cylinder if badly scored or damaged.

2. Check fluid passage in clutch cylinder for obstructions. Clean out all fluid passages. Inspect clutch piston for scores and replace if necessary. Inspect check balls for freedom of movement and proper seating.

DISASSEMBLY AND ASSEMBLY OF SUBASSEMBLIES (Continued)

3. Check clutch release spring for distortion and cracks. Replace spring (including wave spring) if distorted or cracked.

4. Inspect composition clutch plates, steel clutch plates and clutch pressure plate for worn or scored bearing surfaces. Replace all parts that are deeply scored or burred.

5. Check clutch plates for flatness and fit on clutch hub serrations. Discard any plate that does not slide freely on serrations or that is not flat.

6. Check clutch hub thrust surfaces for scores and clutch hub splines for wear.

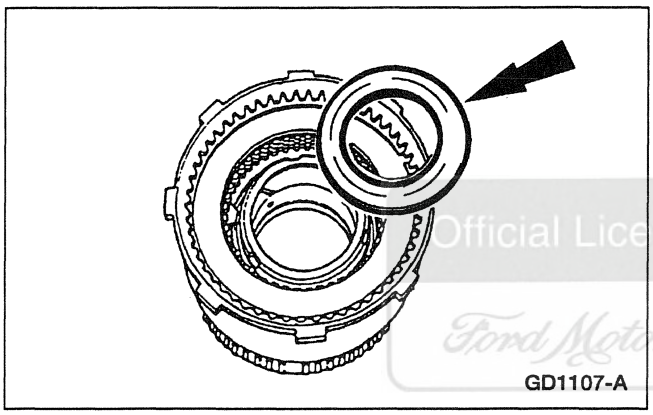
GD1107-A

7. Remove the No. 2 forward clutch bearing.

Official Licensed Product
Ford Motor Company

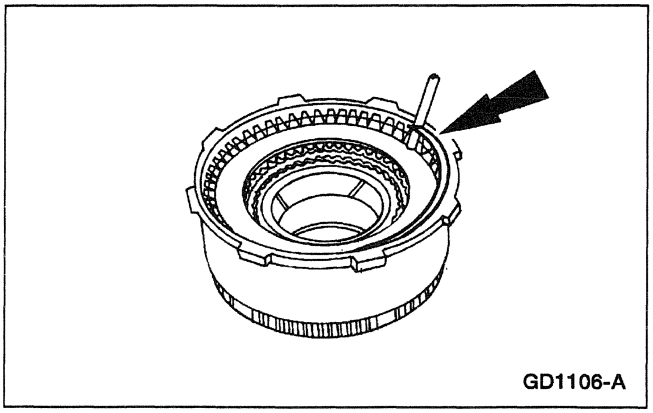
GD1106-A

8. Remove the reverse clutch pressure plate retainer.

DISASSEMBLY AND ASSEMBLY OF SUBASSEMBLIES (Continued)

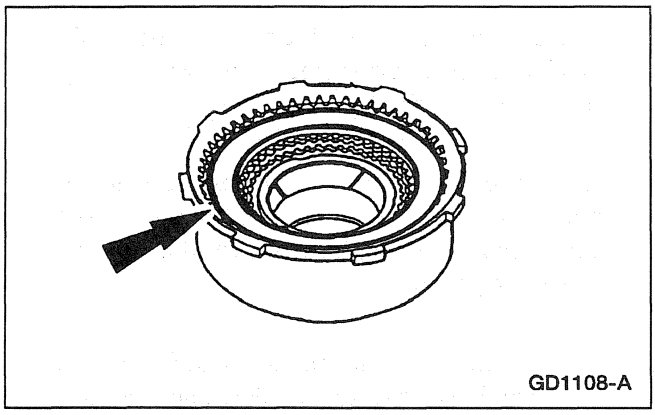

GD1108-A

9. Remove the reverse clutch pack.

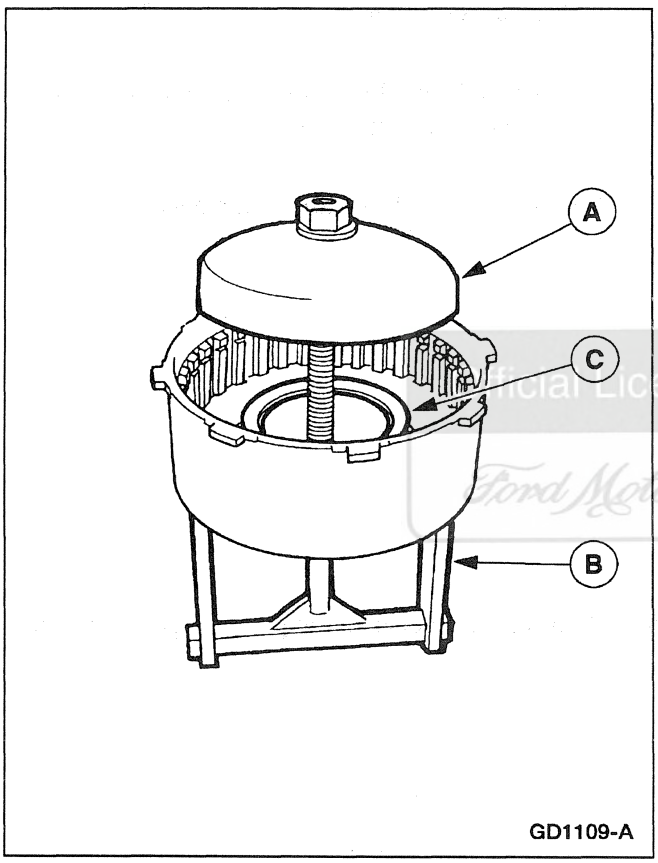

GD1109-A

10. Use (A) Reverse Clutch Spring Compressor and (B) Clutch Spring Compressor to compress the (C) reverse clutch piston spring (7B070).

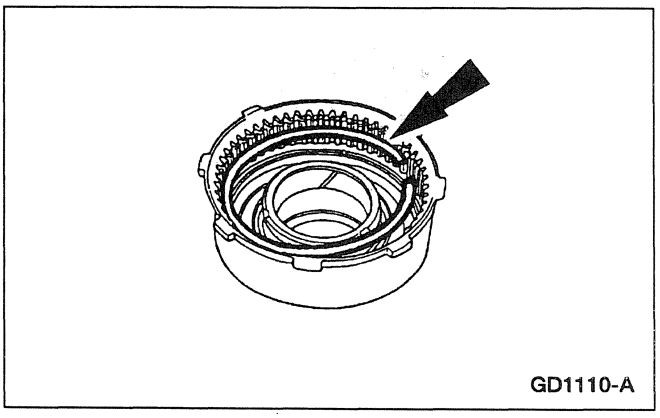

GD1110-A

11. Remove the reverse clutch piston spring retaining ring.

Official Licensed Product
Ford Motor Company

DISASSEMBLY AND ASSEMBLY OF SUBASSEMBLIES (Continued)

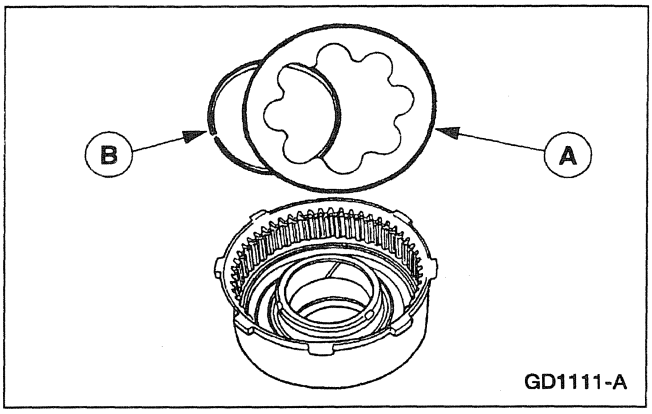

12. Remove the (A) reverse clutch piston spring and the (B) reverse clutch piston spring pressure ring (7D256).

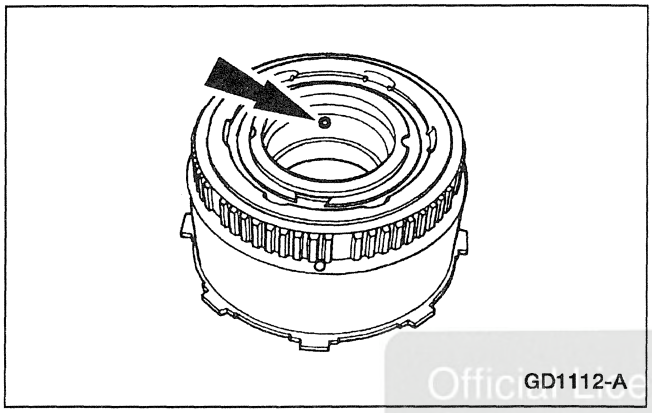

13. **NOTE:** To ease reverse clutch piston removal, it may be necessary to apply air pressure to the reverse clutch drum (7D044). Block the opposite hole.

    Remove the reverse clutch piston (7D402).

Official Licensed Product
Ford Motor Company

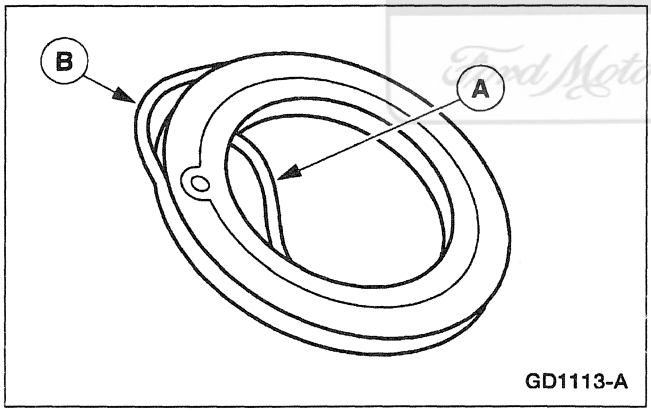

14. Remove the (A) reverse clutch piston inner seal and the (B) reverse clutch piston outer seal (7D403).

Assembly

1. Inspect clutch cylinder thrust surfaces, piston bore and clutch plate serrations for scores or burrs. Minor scores or burrs may be removed with crocus cloth. Replace clutch cylinder if badly scored or damaged.

2. Check fluid passage in clutch cylinder for obstructions. Clean out all fluid passages. Inspect clutch piston for scores and replace if necessary. Inspect check balls for freedom of movement and proper seating.

DISASSEMBLY AND ASSEMBLY OF SUBASSEMBLIES (Continued)

3. Check clutch release spring for distortion and cracks. Replace spring (including wave spring) if distorted or cracked.

4. Inspect composition clutch plates, steel clutch plates and clutch pressure plate for worn or scored bearing surfaces. Replace all parts that are deeply scored or burred.

5. Check clutch plates for flatness and fit on clutch hub serrations. Discard any plate that does not slide freely on serrations or that is not flat.

6. Check clutch hub thrust surfaces for scores and clutch hub splines for wear.

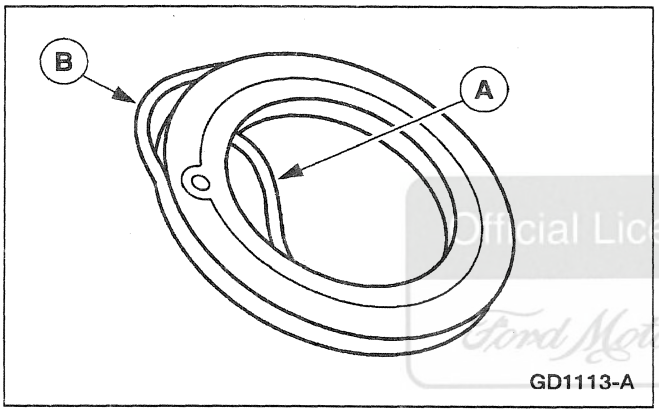

7. **NOTE:** The piston check ball must be present and moving freely.

   Install a new (A) reverse clutch piston inner seal and (B) reverse clutch piston outer seal.

Official Licensed Product
Ford Motor Company

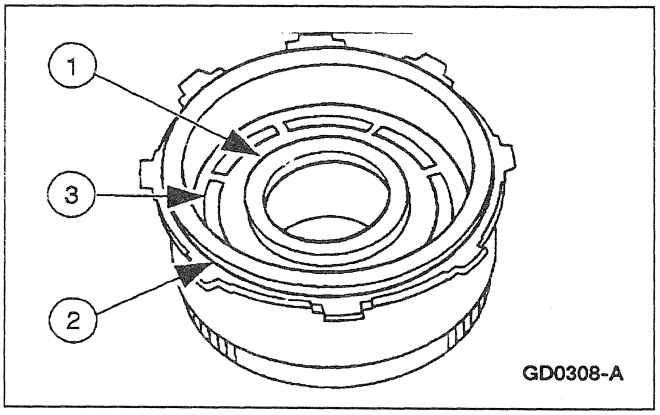

8. **NOTE:** Coat the reverse clutch piston inner seal, reverse clutch piston outer seal reverse clutch drum sealing area and seal protector with petroleum jelly.

   Install the reverse clutch piston.

   1 Position Reverse Clutch Inner Seal Protector on the clutch hub.

   2 Place Reverse Clutch Outer Seal Protector over reverse clutch piston.

   3 Position the reverse clutch piston and use even pressure to push it to the bottom of the reverse clutch drum.

DISASSEMBLY AND ASSEMBLY OF SUBASSEMBLIES (Continued)

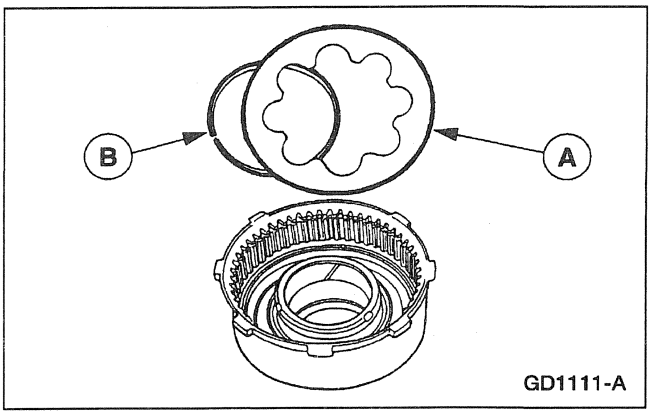

9. **NOTE:** The dished side of the reverse clutch piston spring must face the reverse clutch piston.
   Install the (A) pressure ring and the (B) reverse clutch piston spring.

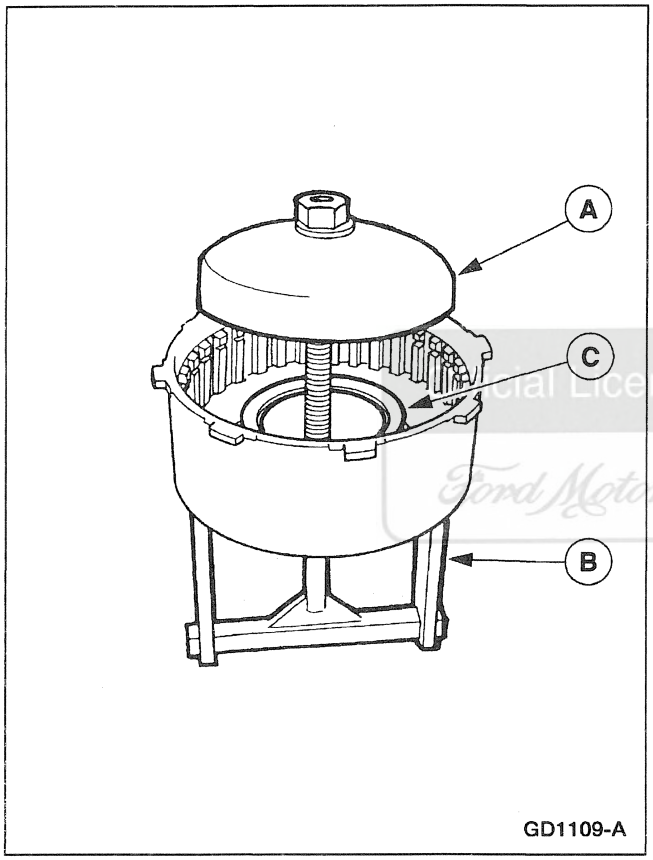

10. Use (A) Reverse Clutch Spring Compressor and (B) Clutch Spring Compressor to compress the (C) reverse clutch piston spring.

Commercial Licensed Product
Ford Motor Company

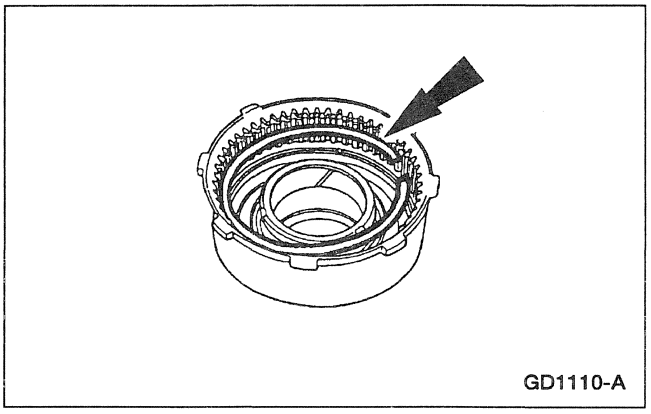

11. Install the reverse clutch piston spring retaining ring.

DISASSEMBLY AND ASSEMBLY OF SUBASSEMBLIES (Continued)

12. Remove Reverse Clutch Spring Compressor and Clutch Spring Compressor.

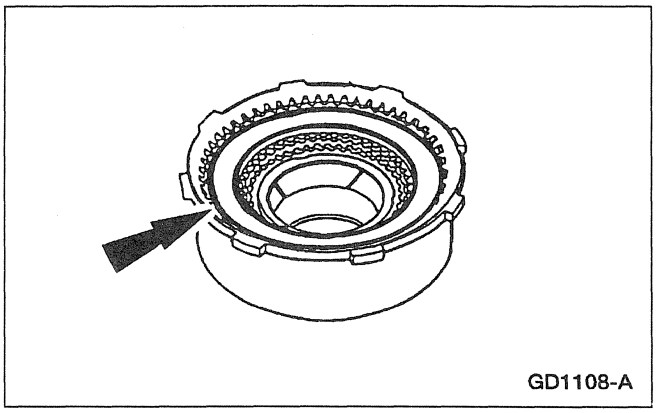
GD1108-A

13. **NOTE:** Before assembly, soak new clutch discs in transmission fluid for 15 minutes.

    NOTE: Install the pressure plates with the flat sides facing the clutch pack.

    Install the reverse clutch front pressure plate, clutch pack and reverse clutch rear pressure plate.

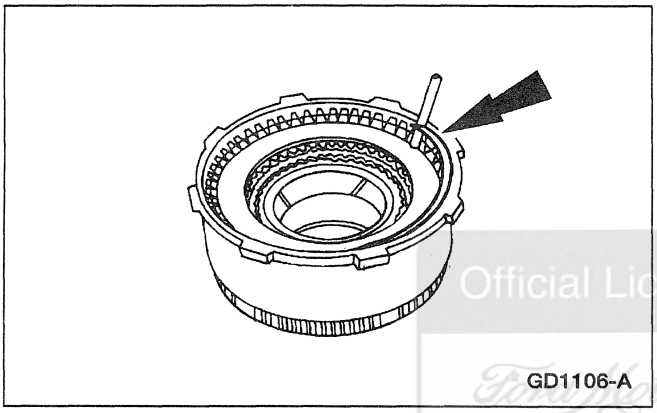
GD1106-A

14. Install the reverse clutch pressure plate retainer snap ring (7D483).

Official Licensed Product
Ford Motor Company

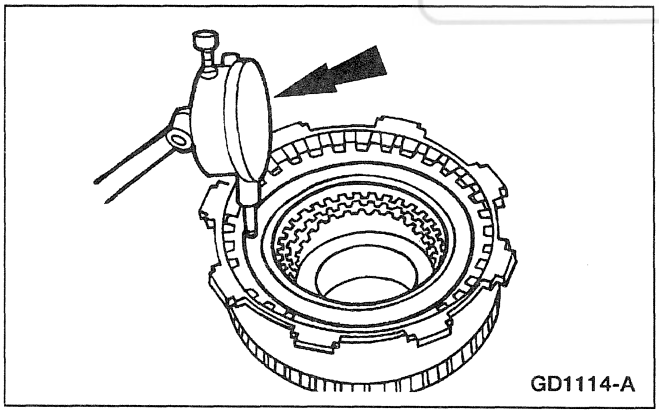
GD1114-A

15. Position and zero Dial Indicator With Bracketry on the reverse clutch pack.
    - Push downward on the clutch pack.
    - Release pressure and zero the dial indicator.

DISASSEMBLY AND ASSEMBLY OF SUBASSEMBLIES (Continued)

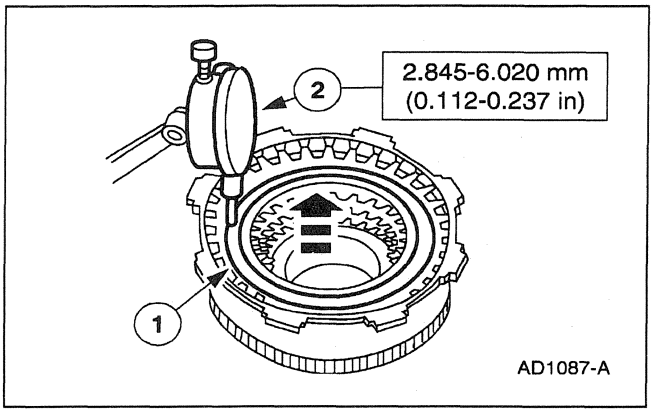

16. Check the reverse clutch pack clearance.
    1 Lift up on the clutch pack until it fully seats against the reverse clutch pressure plate retainer.
    2 Read the dial indicator.
    - If clearance is not within specifications, install the correct size retaining ring.

Selective Retaining Rings

Specification
1.52-1.62mm (0.060-0.064 inch)
1.87-1.98mm (0.074-0.078 inch)
2.23-2.33mm (0.088-0.092 inch)
2.59-2.69mm (0.102-0.106 inch)

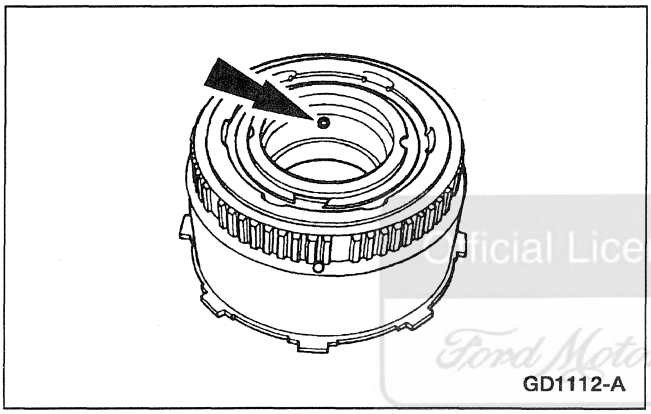

17. Check the clutch for proper operation.
    - Apply air pressure to the reverse clutch drum. The clutch should be heard and felt to work without leakage.

Official Licensed Product
Ford Motor Company

Forward Clutch Cylinder

Special Tool(s)

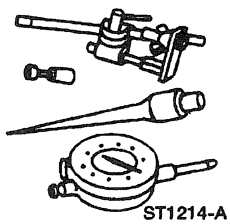 ST1214-A	Dial Indicator With Bracketry 100-002 (TOOL-4201-C) or equivalent
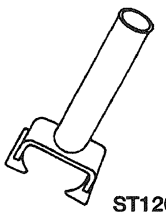 ST1209-A	Direct Clutch Spring Compressor 307-096 (T81P-70235-A)

(Continued)

Special Tool(s)

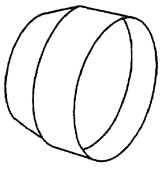 ST1203-B	Forward Clutch Lip Seal Protector 307-078 (T80L-77140-A)
ST1191-A	Lip Seal Protector 307-S018 (T68P-7D158-A)

DISASSEMBLY AND ASSEMBLY OF SUBASSEMBLIES (Continued)

Forward Clutch — Disassembled View

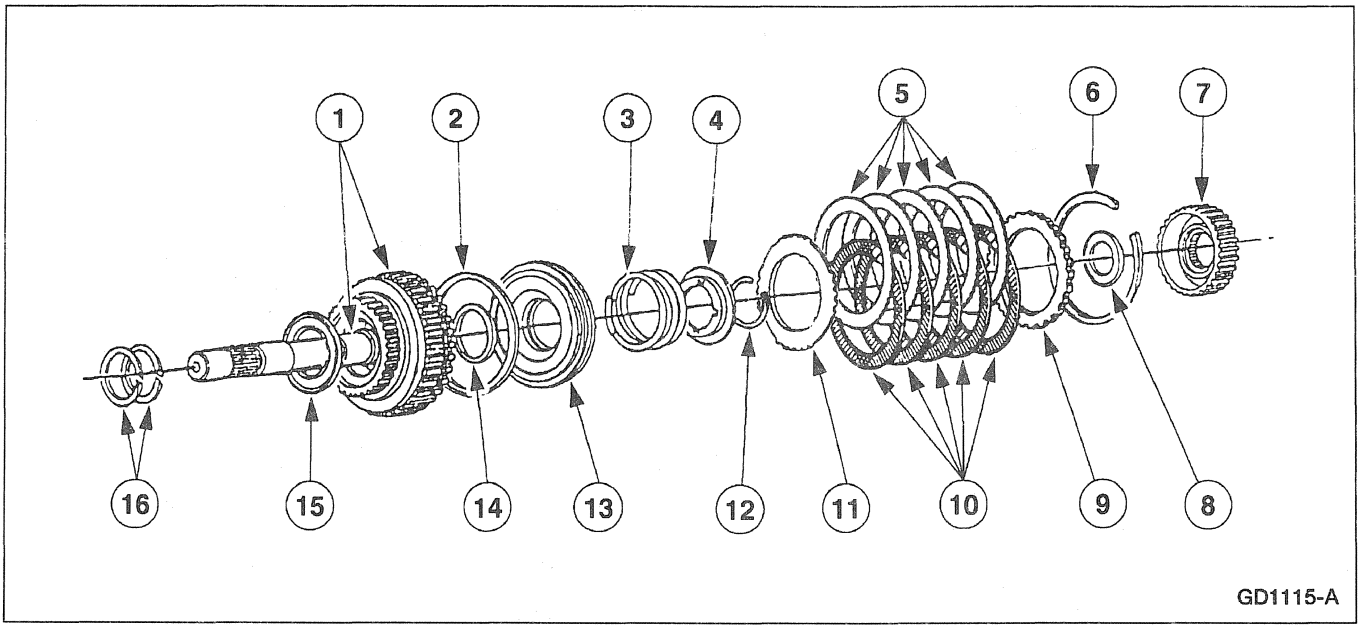

Item	Part Number	Description
1	7F207	Forward Clutch Cylinder and Shaft
2	7A548	Forward Clutch Piston Outer Seal
3	7A480	Forward Clutch Piston Return Spring
4	7A527	Forward Clutch Retainer Return Spring
5	7B442	Forward Clutch External Spline Plate (Steel)
6	7D483	Retaining Snap Ring
7	7B067	Forward Clutch Hub
8	7F231	No. 3 Forward Clutch Hub Front Bearing
9	7B066	Forward Clutch Pressure Plate
10	7B164	Forward Clutch Internal Spline Plates (Friction)
11	7E085	Forward Clutch Pressure Spring
12	388099-S	Retaining Snap Ring
13	7A262	Forward Clutch Piston
14	7C099	Forward Clutch Piston Inner Seal
15	7A166	No. 2 Forward Clutch Bearing
16	7B497	Input Shaft Seal

(Continued)

Official Licensed Product Ford Motor Company

Disassembly

1. Inspect clutch cylinder thrust surfaces, piston bore and clutch plate serrations for scores or burrs. Minor scores or burrs may be removed with crocus cloth. Replace clutch cylinder if badly scored or damaged.

2. Check fluid passage in clutch cylinder for obstructions. Clean out all fluid passages. Inspect clutch piston for scores and replace if necessary. Inspect check balls for freedom of movement and proper seating.

DISASSEMBLY AND ASSEMBLY OF SUBASSEMBLIES (Continued)

3. Check clutch release spring for distortion and cracks. Replace spring (including wave spring) if distorted or cracked.

4. Inspect composition clutch plates, steel clutch plates and clutch pressure plate for worn or scored bearing surfaces. Replace all parts that are deeply scored or burred.

5. Check clutch plates for flatness and fit on clutch hub serrations. Discard any plate that does not slide freely on serrations or that is not flat.

6. Check clutch hub thrust surfaces for scores and clutch hub splines for wear.

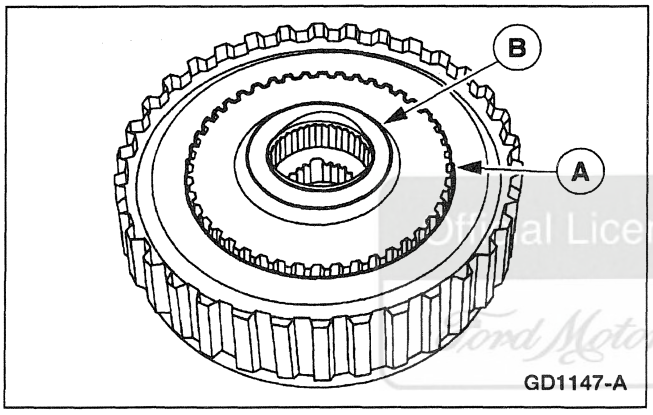

7. **NOTE:** The forward clutch hub may remain in shell during disassembly.

   Remove the (A) forward clutch hub and the (B) No. 3 forward clutch hub front bearing (7F231).

Official Licensed Product
Ford Motor Company

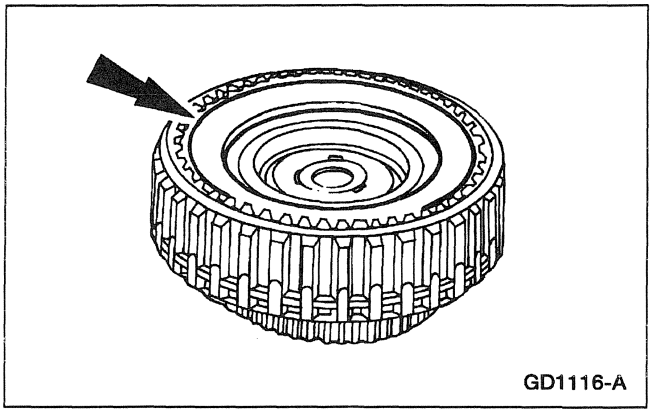

8. **NOTE:** To aid handling, the forward clutch assembly may be set in the extension housing or a hole in the work bench.

   Remove the clutch pack selective retaining ring.

DISASSEMBLY AND ASSEMBLY OF SUBASSEMBLIES (Continued)

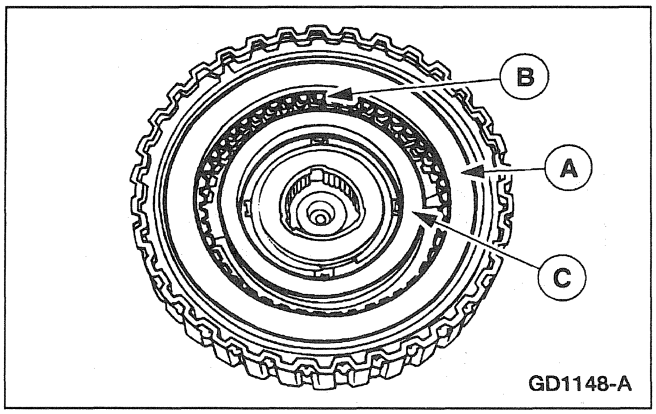

9. Remove the (A) pressure plate, (B) clutch pack and (C) pressure spring.

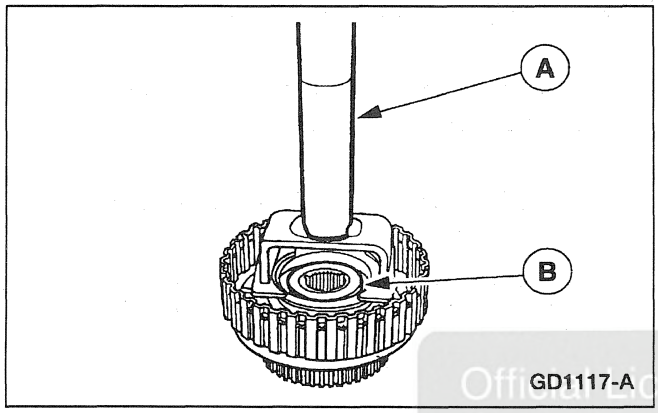

10. ⚠ **CAUTION: Apply only enough pressure to release pressure on the retaining ring. If too much pressure is applied, the spring may break.**

    Use (A) Direct Clutch Spring Compressor and an arbor press to remove the (B) forward clutch retaining ring.

Officially Licensed Product
Ford Motor Company

11. Slowly release the press and remove the forward clutch from the press.

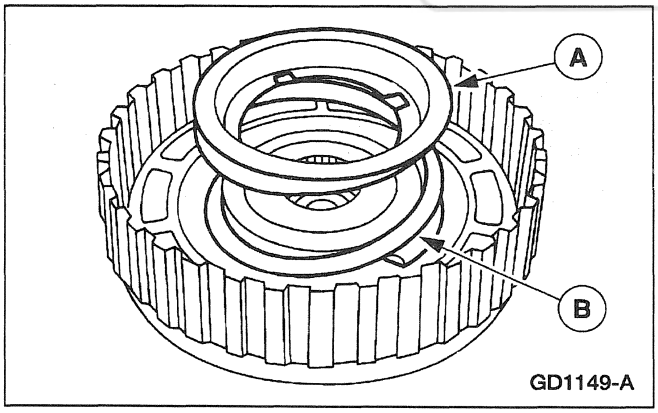

12. Remove the (A) forward clutch retainer and the (B) return spring.

DISASSEMBLY AND ASSEMBLY OF SUBASSEMBLIES (Continued)

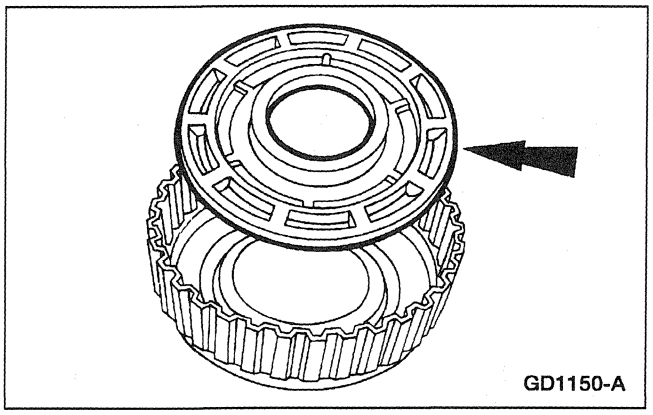
GD1150-A

13. **NOTE:** Air pressure may be required to remove the forward clutch piston.

    Remove the forward clutch piston.

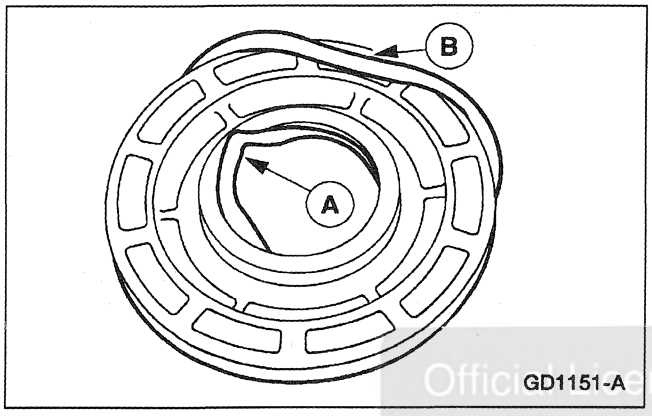

GD1151-A

14. Remove the (A) inner and (B) outer forward clutch piston seals.

Official Licensed Product
Ford Motor Company

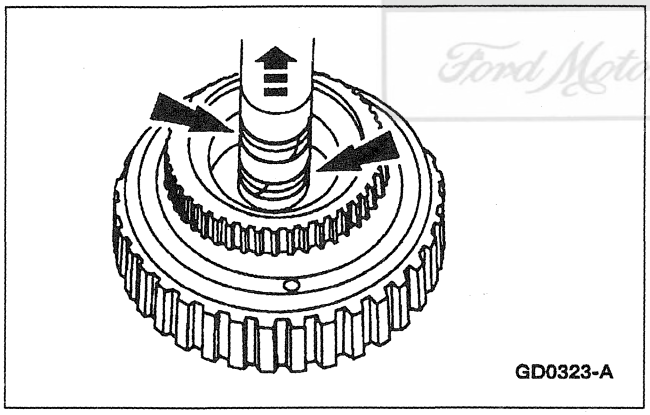
GD0323-A

15. **NOTE:** The seals are solid seals but will be replaced with scarf cut seals.

    Remove the forward clutch input shaft seals.

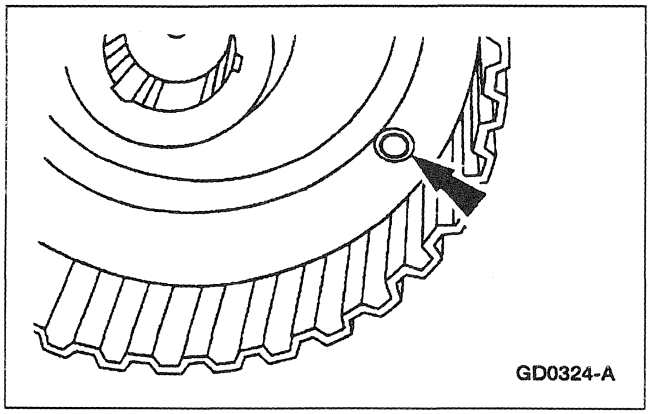
GD0324-A

16. Make sure the check ball in the clutch cylinder is free and clean. Check for proper seating.

DISASSEMBLY AND ASSEMBLY OF SUBASSEMBLIES (Continued)

Assembly

1. Inspect clutch cylinder thrust surfaces, piston bore and clutch plate serrations for scores or burrs. Minor scores or burrs may be removed with crocus cloth. Replace clutch cylinder if badly scored or damaged.

2. Check fluid passage in clutch cylinder for obstructions. Clean out all fluid passages. Inspect clutch piston for scores and replace if necessary. Inspect check balls for freedom of movement and proper seating.

3. Check clutch release spring for distortion and cracks. Replace spring (including wave spring) if distorted or cracked.

4. Inspect composition clutch plates, steel clutch plates and clutch pressure plate for worn or scored bearing surfaces. Replace all parts that are deeply scored or burred.

Official Licensed Product
Ford Motor Company

5. Check clutch plates for flatness and fit on clutch hub serrations. Discard any plate that does not slide freely on serrations or that is not flat.

6. Check clutch hub thrust surfaces for scores and clutch hub splines for wear.

NOTE: To aid handling, the forward clutch assembly may be set in the extension housing or a hole in the work bench.

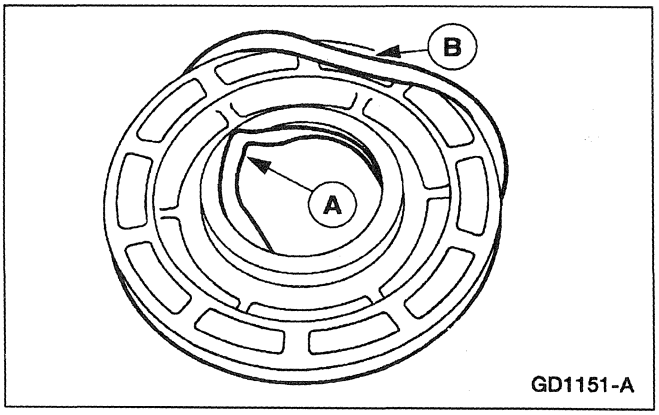

7. Install the (A) inner and (B) outer forward clutch piston seals. Note the direction of the sealing rings before installation.

DISASSEMBLY AND ASSEMBLY OF SUBASSEMBLIES (Continued)

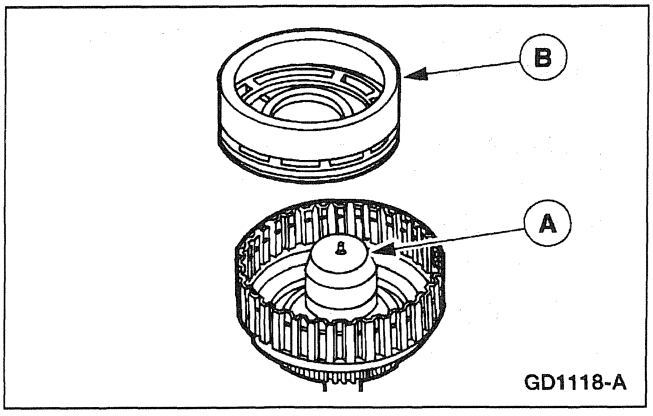

8. **NOTE:** Coat the piston seals and clutch drum sealing area with petroleum jelly.

   Position (A) Forward Clutch Lip Seal Protector (Inner) on the clutch cylinder hub and (B) Forward Clutch Lip Seal Protector (Outer) on the clutch piston.

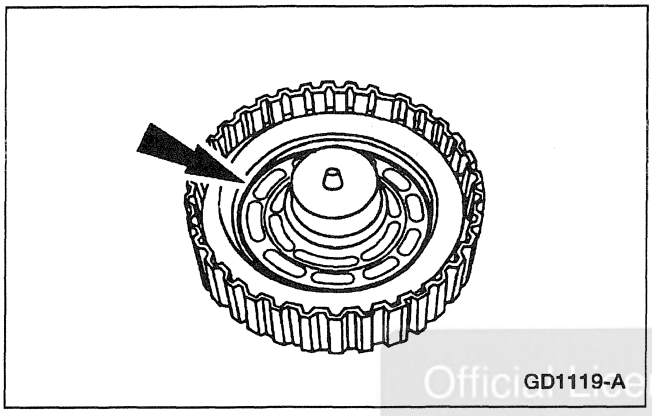

9. Install the forward clutch piston into the clutch drum.
   - Push the piston to the bottom of the drum using even pressure.

Official Licensed Product
Ford Motor Company

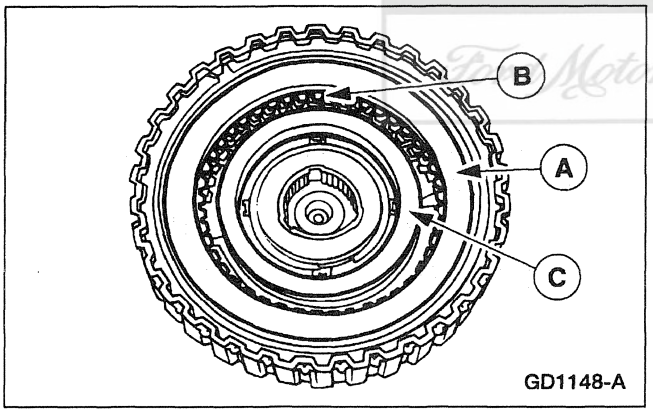

10. Position the (A) pressure plate, (B) clutch pack and the (C) piston return spring and retainer.

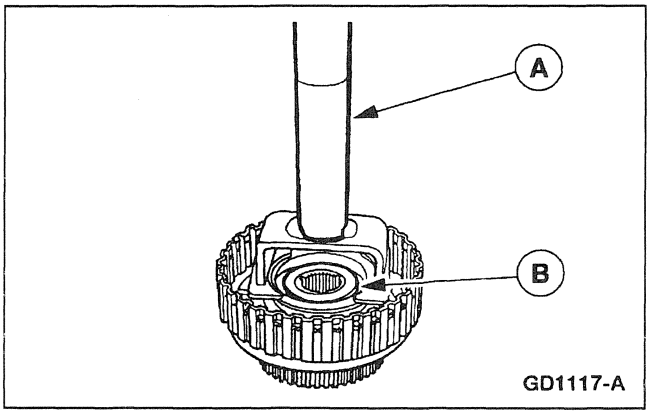

11. Use (A) Direct Clutch Spring Compressor and an arbor press to compress the piston return spring and install the (B) retaining ring.

DISASSEMBLY AND ASSEMBLY OF SUBASSEMBLIES (Continued)

12. Slowly release the press pressure and remove the forward clutch.

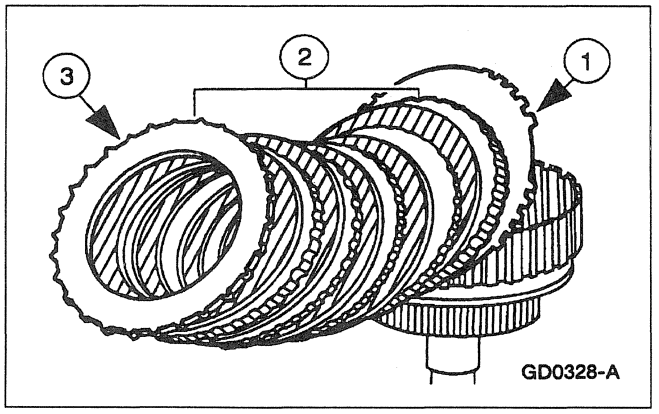

13. **NOTE:** Before assembly, soak new clutch discs in transmission fluid for 15 minutes.

    Install the clutch pack assembly.

    1 Install the pressure ring.
    2 Install the clutch pack.
    3 Install the pressure plate.

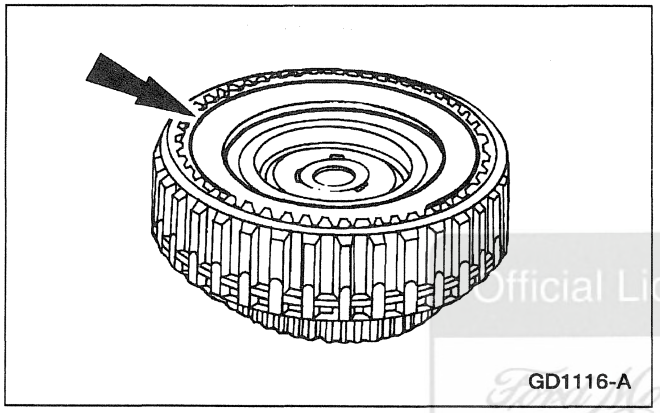

14. Install the clutch pack retaining ring.

Official Licensed Product
Ford Motor Company

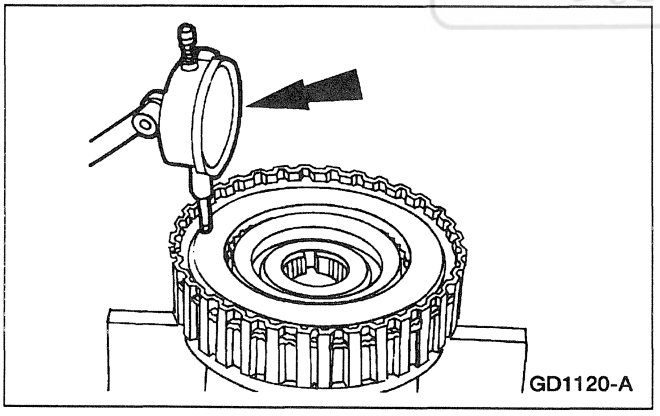

15. Position and zero Dial Indicator With Bracketry on the forward clutch pack.
    - Push downward on the clutch pack.
    - Release pressure and zero the dial indicator.

DISASSEMBLY AND ASSEMBLY OF SUBASSEMBLIES (Continued)

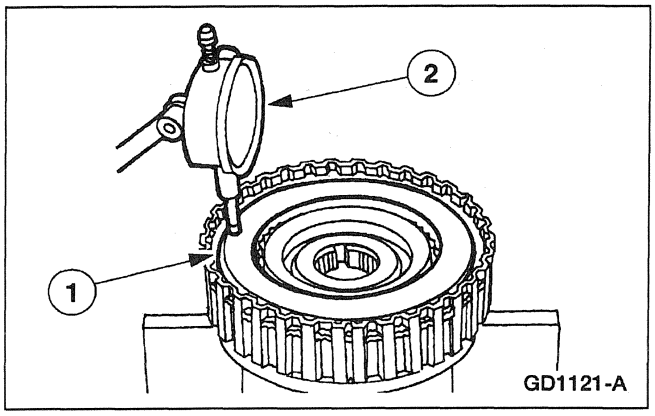

16. Check the clutch pack clearance.
    1 Lift up on the clutch pack until it fully seats against the clutch pressure plate retainer.
    2 Read the dial indicator.
    - If the clearance is not within specifications, install the correct size retaining ring.

Selective Retaining Ring

Specification
1.52-1.62mm (0.060-0.064 inch)
1.87-1.98mm (0.074-0.078 inch)
2.23-2.69mm (0.086-0.106 inch)
2.59-2.69mm (0.102-0.106 inch)

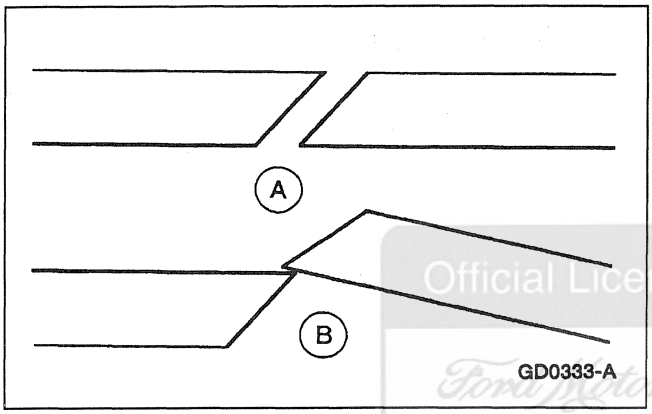

17. **NOTE:** Make sure scarf-cut seals are mated correctly.

    Slide the two scarf-cut seals on the input shaft. (A) is correct; (B) is incorrect mating.

Official Licensed Product
Ford Motor Company

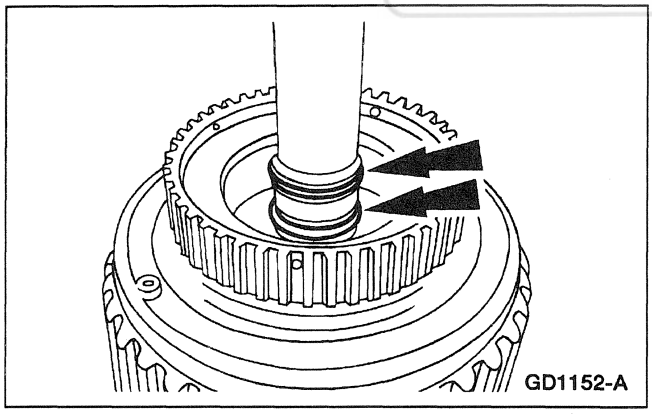

18. Install the two scarf-cut on input shaft.

DISASSEMBLY AND ASSEMBLY OF SUBASSEMBLIES (Continued)

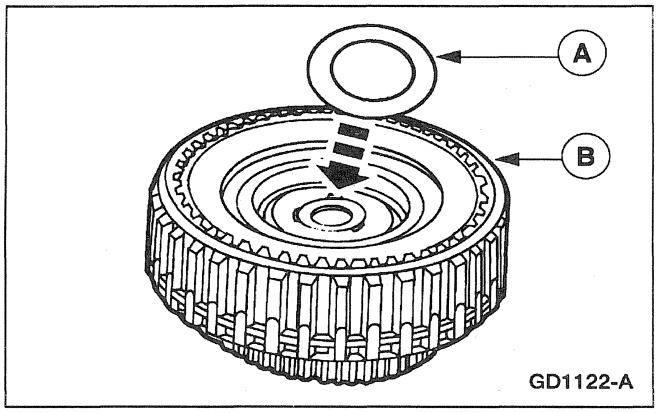

19. Install the (A) No. 3 forward clutch hub front bearing and the (B) forward clutch hub.

Planetary Gear Support Assembly and Planetary One-Way Clutch

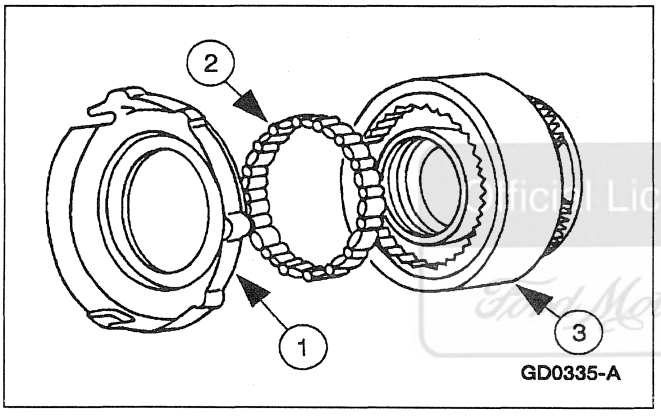

Official Licensed Product
Ford Motor Company

Item	Part Number	Description
1	7A130	Planetary Gear Support
2	7A089	Planetary One-Way Clutch
3	7A398	Planetary Assembly

DISASSEMBLY AND ASSEMBLY OF SUBASSEMBLIES (Continued)

Disassembly

NOTE: Inspect the outer and inner races for scores or damaged surface areas where rollers contact the races. Inspect the rollers and springs for excessive wear or damage. Inspect the spring and cage for bent or damaged spring retainers.

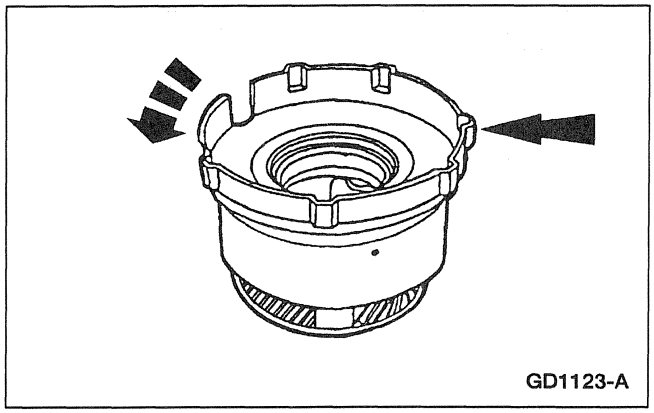
GD1123-A

1. Rotate the center support counterclockwise and lift to remove the planetary gear support.

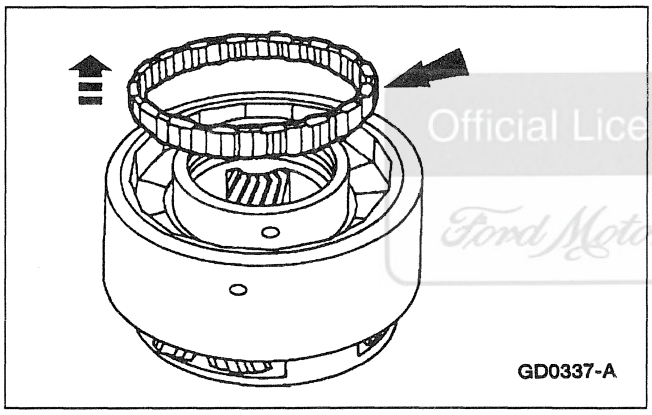
GD0337-A

2. Remove the planetary one-way clutch.

Official Licensed Product
Ford Motor Company

Assembly

NOTE: Inspect the outer and inner races for scores or damaged surface areas where rollers contact the races. Inspect the rollers and springs for excessive wear or damage. Inspect the spring and cage for bent or damaged spring retainers.

1. Follow the disassembly procedure in reverse order.

DISASSEMBLY AND ASSEMBLY OF SUBASSEMBLIES (Continued)

Reverse Sun Gear

Disassembly

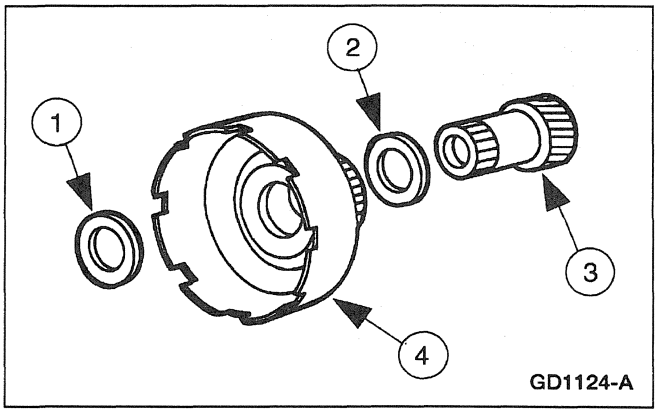

Item	Part Number	Description
1	7C096	No. 4 Forward Clutch Hub Bearing
2	7F244	No. 5 Forward Clutch Sun Gear Bearing

(Continued)

Item	Part Number	Description
3	7A399	Forward Clutch Sun Gear
4	7A019	Reverse Sun Gear Assembly

Official Licensed Product
Ford Motor Company®

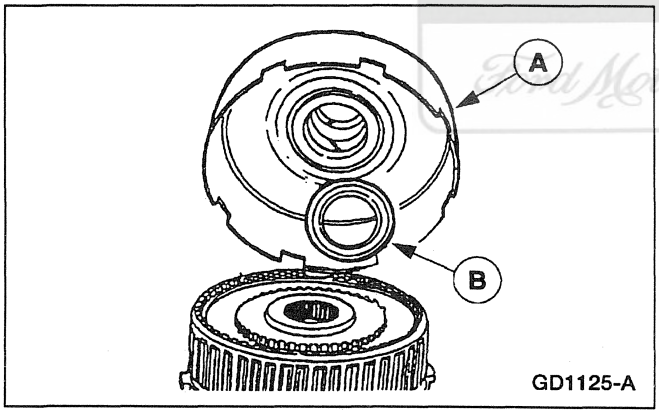

1. Remove the (A) reverse sun gear assembly and the (B) No. 4 forward clutch hub bearing.

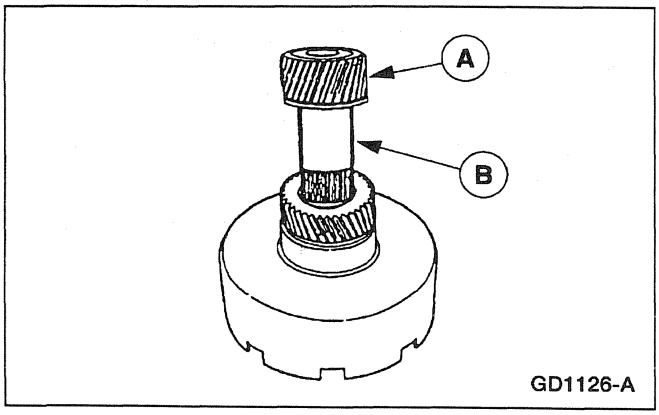

2. Remove the (A) forward clutch sun gear and the (B) No. 5 forward clutch sun gear bearing.

DISASSEMBLY AND ASSEMBLY OF SUBASSEMBLIES (Continued)

Assembly

1. The forward clutch sun gear and reverse sun gear assembly are assembled as part of the transmission assembly procedure.

Output Shaft and Direct Clutch Cylinder

Special Tool(s)

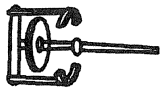 ST1190-A	Clutch Spring Compressor 307-015 (T65L-77515-A)
ST1204-A	Direct Clutch Inner Lip Seal Protector 307-080 (T80L-77234-A)
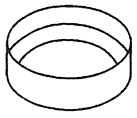 ST1901-A	Direct Clutch Outer Lip Seal Protector 307-081 (T80L-77254-A)

Output Shaft, Direct Clutch Cylinder and Ring Gear Disassembled View

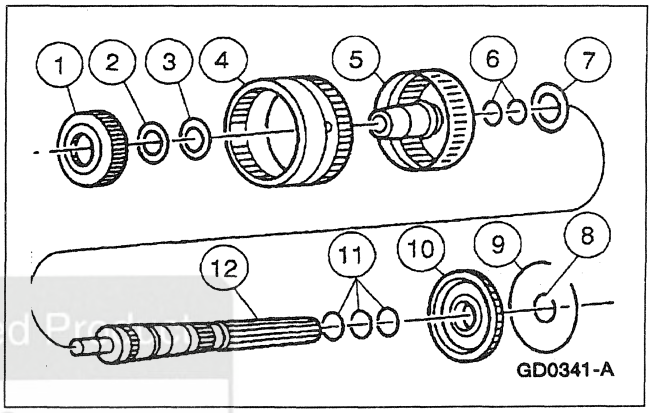

Item	Part Number	Description
1	7F236	Direct Clutch Hub
2	7F243	No. 7 Direct Clutch Inner Bearing
3	7F237	Direct Clutch Inner Bearing
4	7A153	Output Shaft Ring Gear Assembly
5	7F283	Direct Clutch Cylinder
6	7F274	Output Shaft to Direct Clutch Cylinder Seal (2 Req'd)
7	7F240	No. 8 Direct Clutch Outer Bearing
8	97713-S	Retaining Snap Ring
9	7C122	Snap Ring
10	7D164	Output Shaft Hub
11	7F273	Output Shaft to Case Seal (3 Req'd)
12	7060	Output Shaft

Official Licensed Product
Ford Motor Company

DISASSEMBLY AND ASSEMBLY OF SUBASSEMBLIES (Continued)

Direct Clutch Disassembled View

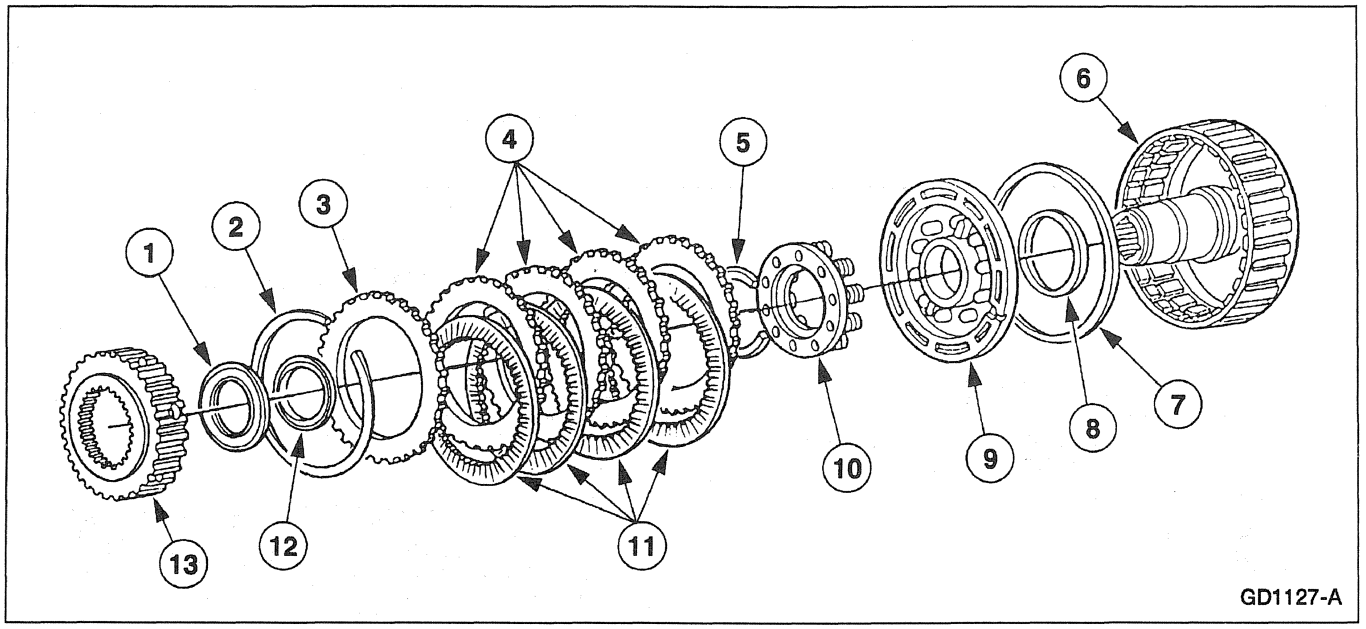

Item	Part Number	Description
1	7F243	No. 7 Direct Clutch Bearing
2	7D483	Direct Clutch Pressure Plate Retaining Ring
3	7B066	Direct Clutch Pressure Plate
4	7B442	Direct Clutch External Spline Plate (Steel)
5	388104-S	Retaining Ring
6	7F283	Direct Clutch Cylinder
7	7A233	Direct Clutch Piston Outer Seal

(Continued)

Item	Part Number	Description
8	7C099	Direct Clutch Piston Inner Seal
9	7A262	Direct Clutch Piston
10	7F235	Direct Clutch Retainer and Spring Assembly
11	7B164	Direct Clutch Internal Spline Plates (Friction)
12	7F237	Direct Clutch Inner Bearing Support
13	7F236	Direct Clutch Hub

Ford Licensed Product

DISASSEMBLY AND ASSEMBLY OF SUBASSEMBLIES (Continued)

Disassembly

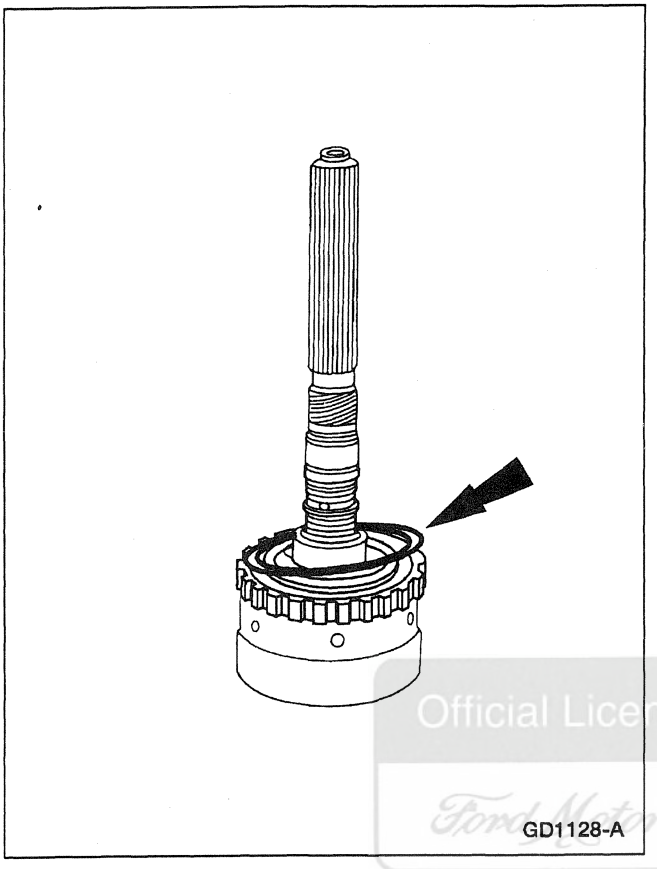
GD1128-A

1. Remove the ring gear snap ring.

Official Licensed Product
Ford Motor Company

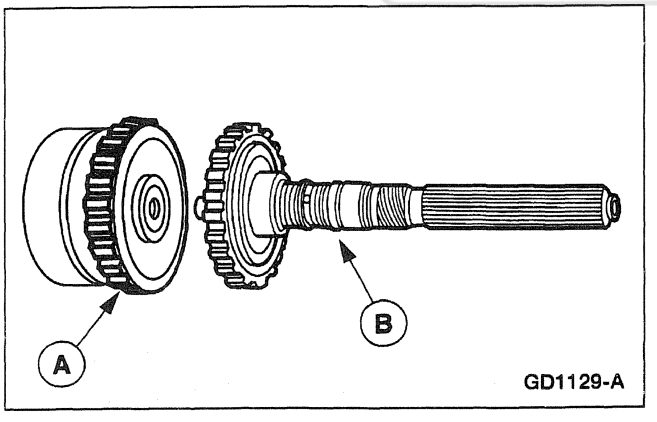

GD1129-A

2. Separate the (A) ring gear and (B) output shaft.

DISASSEMBLY AND ASSEMBLY OF SUBASSEMBLIES (Continued)

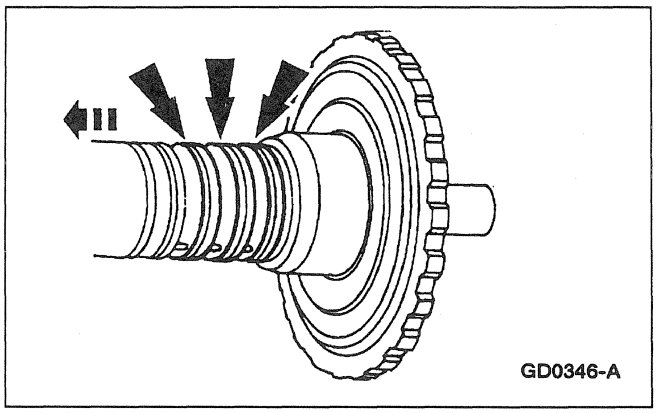

3. Remove the three output shaft seal rings.

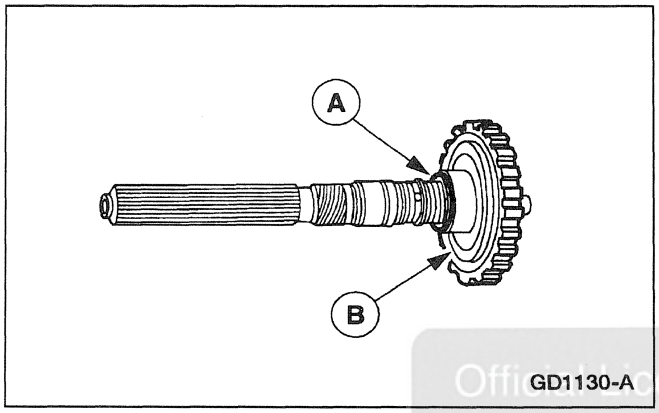

4. Remove the (A) output shaft hub snap ring and the (B) output shaft hub.

Official Licensed Product
Ford Motor Company

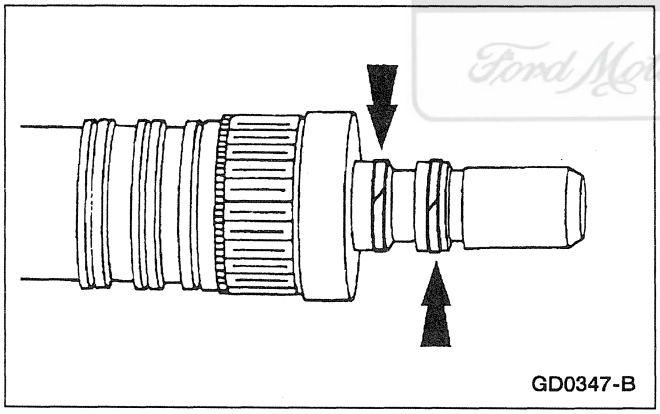

5. Remove the two direct clutch seal rings.

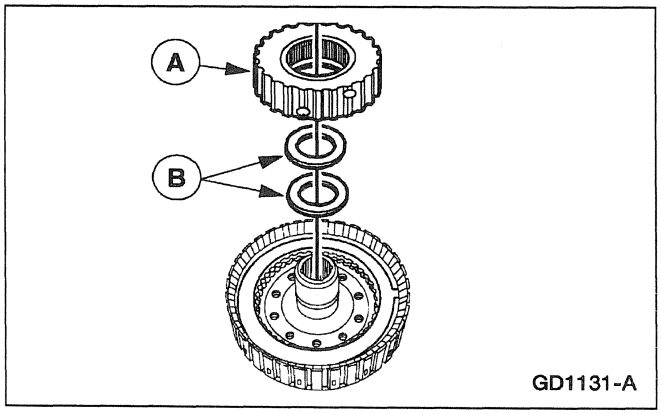

6. Remove the (A) direct clutch hub and the (B) bearing and direct clutch inner bearing support.

DISASSEMBLY AND ASSEMBLY OF SUBASSEMBLIES (Continued)

7. Inspect clutch cylinder thrust surfaces, piston bore and clutch plate serrations for scores or burrs. Minor scores or burrs may be removed with crocus cloth. Replace clutch cylinder if badly scored or damaged.

8. Check fluid passage in clutch cylinder for obstructions. Clean out all fluid passages. Inspect clutch piston for scores and replace if necessary. Inspect check balls for freedom of movement and proper seating.

9. Check clutch release spring for distortion and cracks. Replace spring (including wave spring) if distorted or cracked.

10. Inspect composition clutch plates, steel clutch plates and clutch pressure plate for worn or scored bearing surfaces. Replace all parts that are deeply scored or burred.

11. Check clutch plates for flatness and fit on clutch hub serrations. Discard any plate that does not slide freely on serrations or that is not flat.

12. Check clutch hub thrust surfaces for scores and clutch hub splines for wear.

Official Licensed Product
Ford Motor Company

DISASSEMBLY AND ASSEMBLY OF SUBASSEMBLIES (Continued)

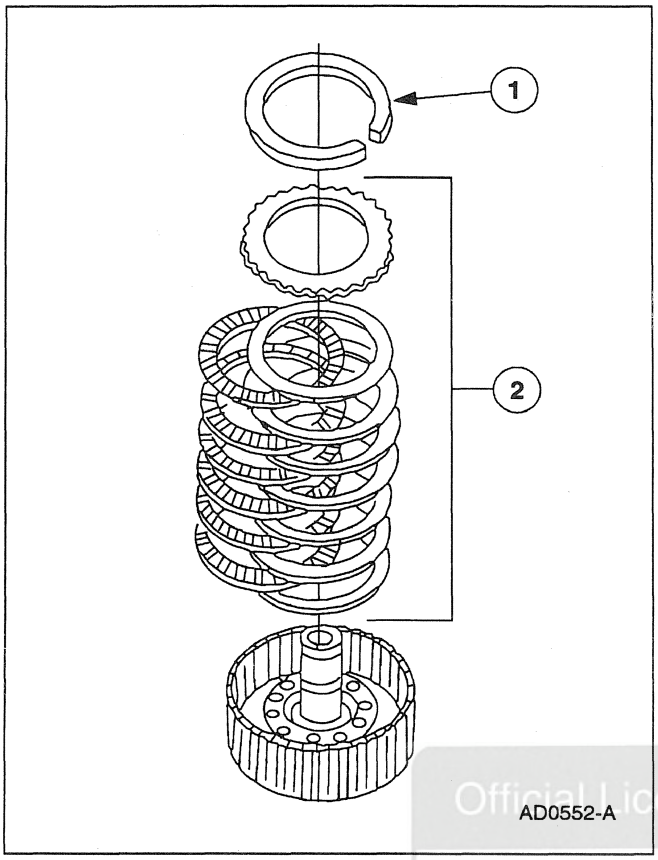

13. Remove the (1) direct clutch pack retaining ring and the (2) direct clutch pack.

Official Licensed Product
Ford Motor Company

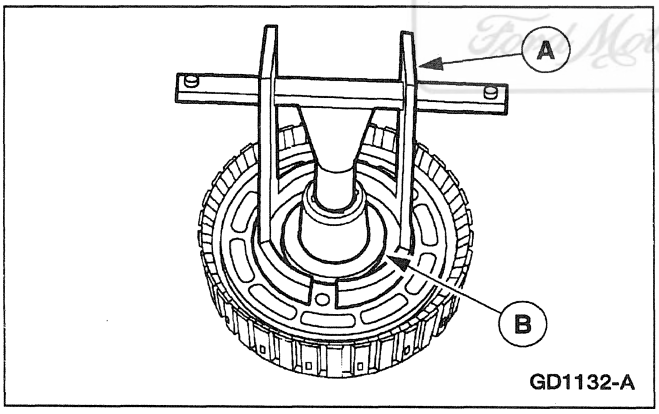

14. Use (A) Clutch Spring Compressor to compress the piston return spring and remove the (B) snap ring.

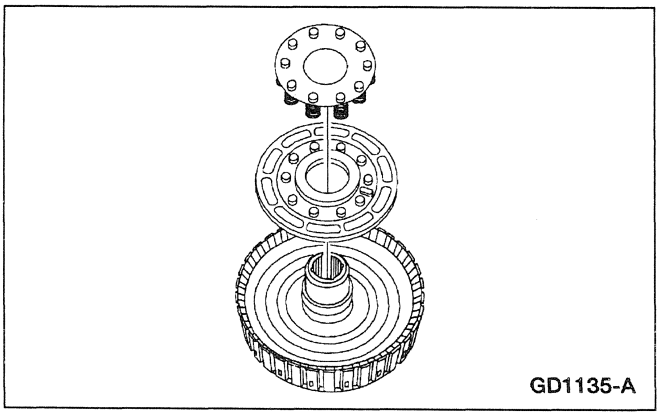

15. **WARNING: WEAR SAFETY GLASSES WHEN USING COMPRESSED AIR.**

    NOTE: If necessary, use regulated compressed air (207 kPa [30 psi] max pressure) to remove the clutch piston.

    Remove the support and spring assembly and piston.

DISASSEMBLY AND ASSEMBLY OF SUBASSEMBLIES (Continued)

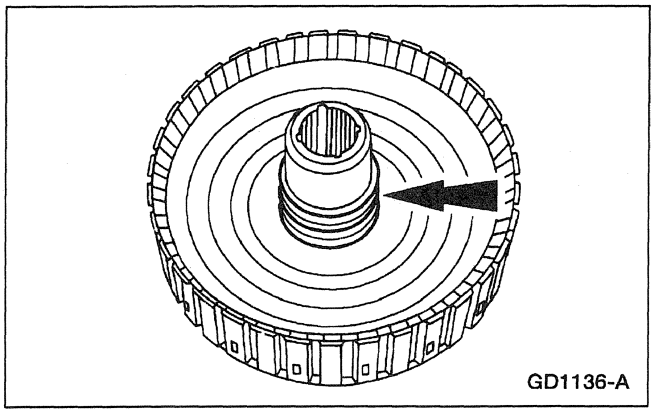

16. Remove the inner piston seal.

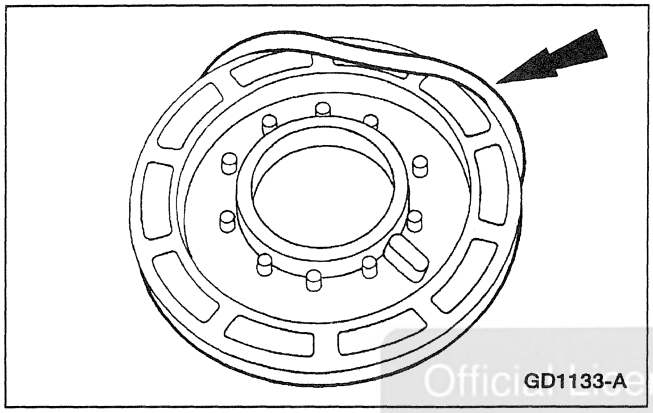

17. Remove the outer piston seal.

Official Licensed Product
Ford Motor Company

Assembly

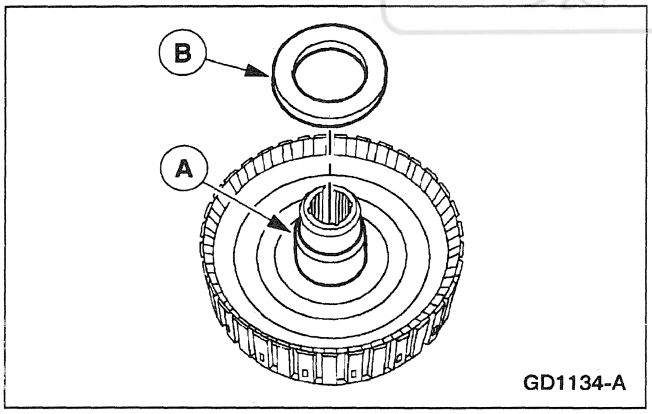

1. **NOTE:** Lubricate direct clutch piston inner seal and seal protector with petroleum jelly.

   Position (A) Direct Clutch Lip Seal Protector over the clutch cylinder hub and install the (B) inner piston seal.

   - Install the seal with sealing lip facing down.

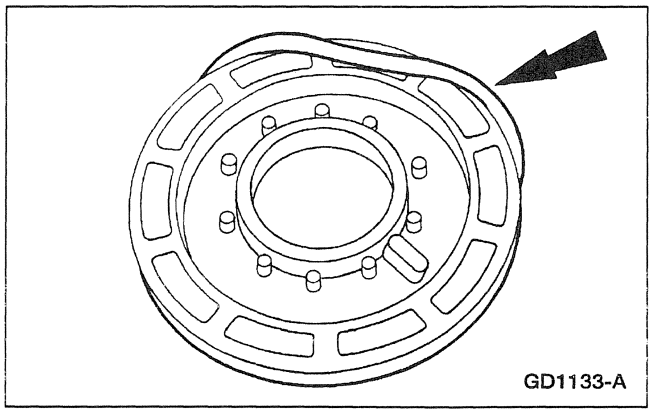

2. Install the clutch piston outer seal so that when the piston is installed the sealing lip points toward the bottom of the cylinder.

DISASSEMBLY AND ASSEMBLY OF SUBASSEMBLIES (Continued)

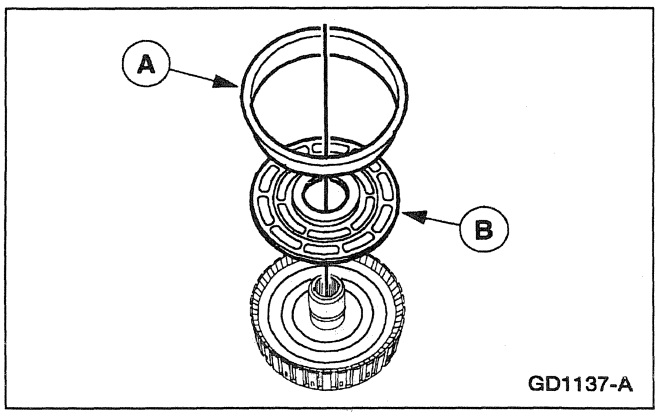

3. **NOTE:** Coat inner and outer direct clutch piston seals, clutch cylinder sealing area and piston inner sealing area with petroleum jelly.

   Use (A) Direct Clutch Lip Seal Protector to install the (B) direct clutch piston.

4. Install the piston return spring and retainer assembly.

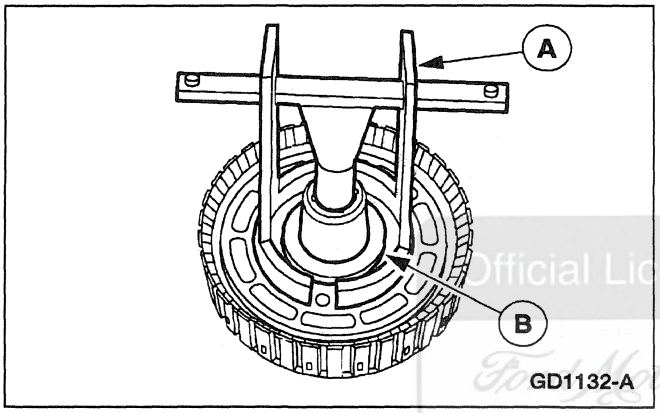

5. Use (A) Clutch Spring Compressor to compress the piston return spring and install the (B) retaining ring.

Official Licensed Product
Ford Motor Company

DISASSEMBLY AND ASSEMBLY OF SUBASSEMBLIES (Continued)

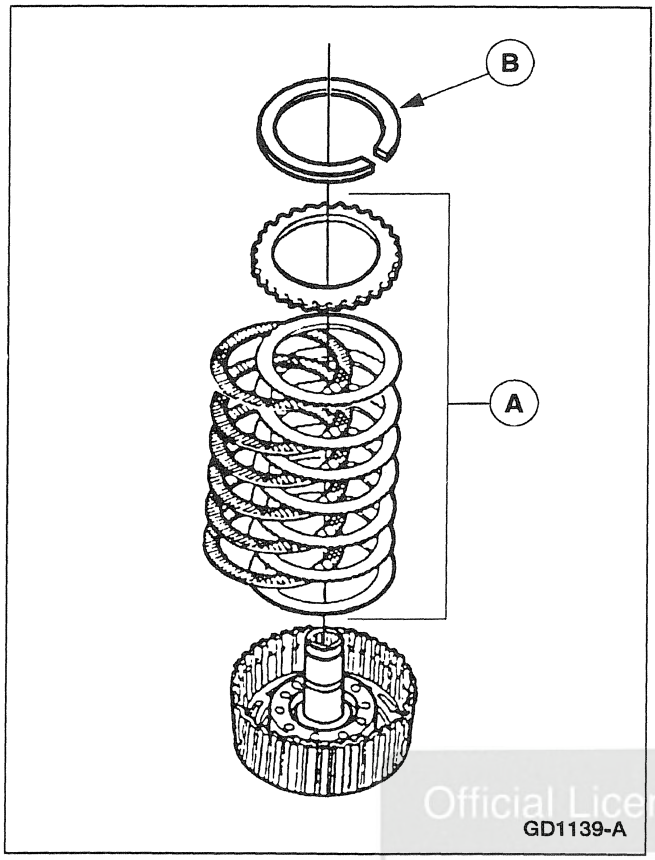

6. **NOTE:** Before assembly, soak new clutch discs should be soaked in transmission fluid for 15 minutes.

   Install the (A) clutch pack and the (B) clutch pack retaining ring.

   - Alternate external spline (steel) plates and internal spline (friction) plates, starting with a steel plate and ending with the steel pressure plate.

Official Licensed Product
Ford Motor Company

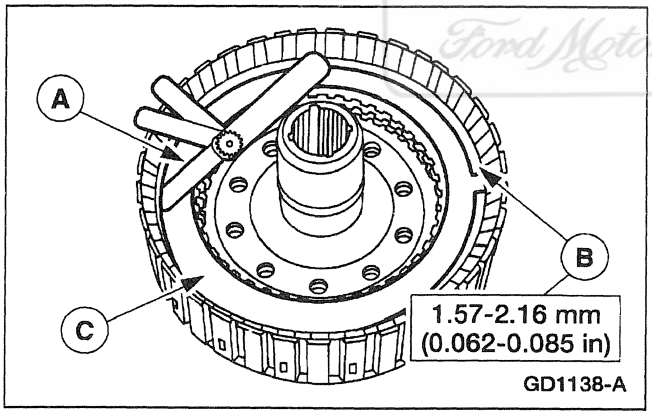

7. Use a (A) feeler gauge to check the clearance between the (B) clutch pack retaining ring and the (C) pressure plate.

   - If the clearance is not within specifications, install the correct size retaining ring and recheck clearance.

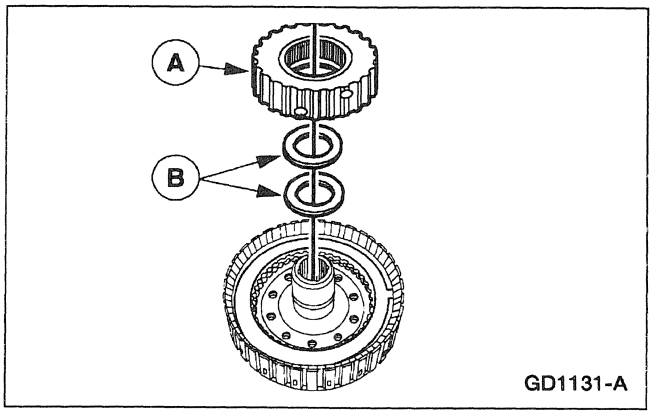

8. Install the washer and the (B) No. 7 needle bearing on the (A) direct clutch hub and install the direct clutch hub.

   - Install the needle bearing with the black side up, toward direct clutch hub.

DISASSEMBLY AND ASSEMBLY OF SUBASSEMBLIES (Continued)

NOTE: Inspect the output shaft bearing surfaces for scores. Inspect the output shaft splines for wear. Inspect all bushings.

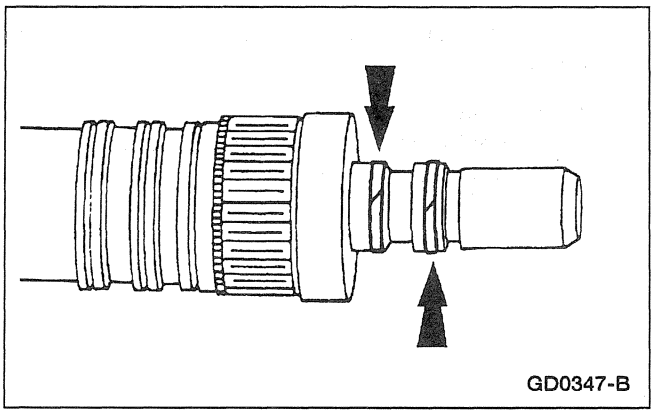
GD0347-B

9. ⚠ **CAUTION: Make sure seals are lapped correctly. Internal damage may occur.**
   Install the two direct clutch seal rings.

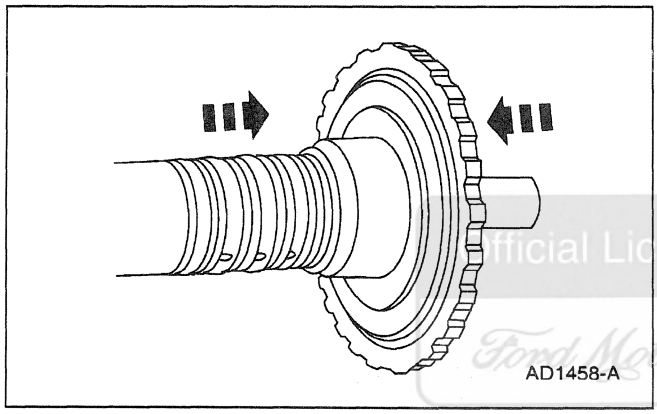
AD1458-A

10. Install the output shaft hub.
    - Position the output shaft hub.
    - Install the retaining ring.

Official Licensed Product
Ford Motor Company

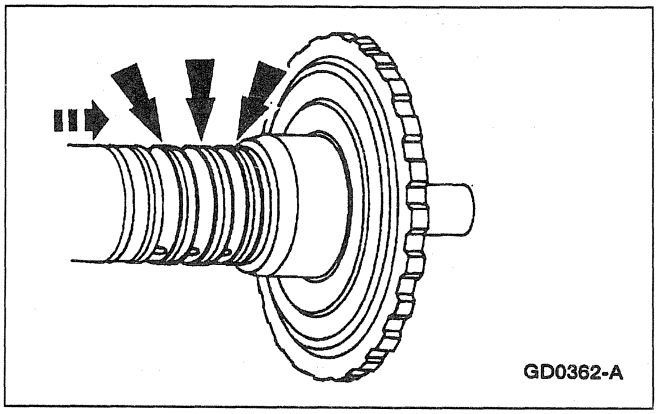
GD0362-A

11. Install the three output shaft seal rings.

DISASSEMBLY AND ASSEMBLY OF SUBASSEMBLIES (Continued)

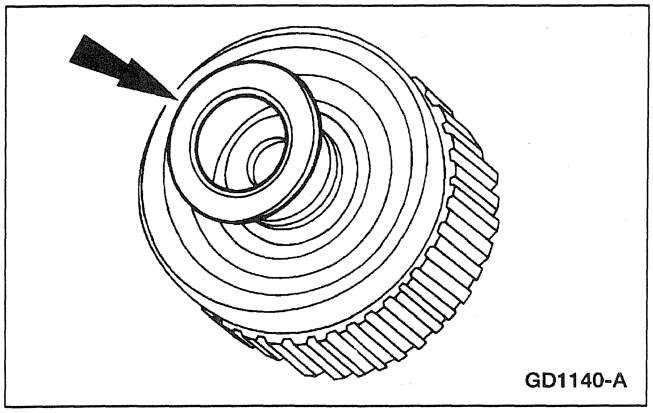
GD1140-A

12. Install the No. 8 needle bearing on the direct clutch cylinder.

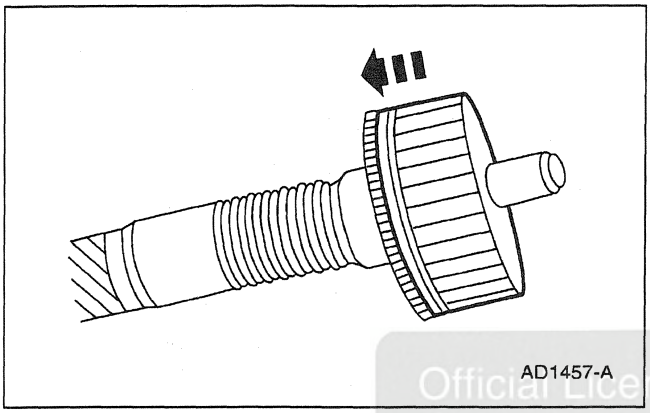
AD1457-A

13. **NOTE:** Direct clutch cylinder may be installed after the output shaft ring gear is installed to the output shaft hub.

    Assemble the direct clutch on the output shaft.

Official Licensed Product
Ford Motor Company

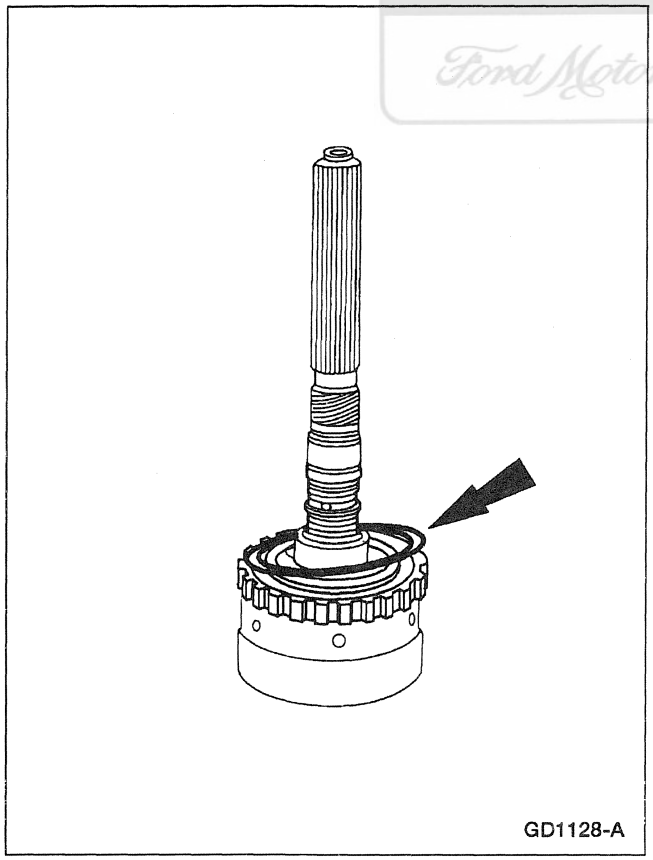
GD1128-A

14. Install the ring gear on the output shaft.

DISASSEMBLY AND ASSEMBLY OF SUBASSEMBLIES (Continued)

Torque Converter Service and Replacement

1. The torque converter (7902) must be replaced if one or more of the following statements are true:
   - A torque converter malfunction has been determined based on complete diagnostic procedures.
   - Converter studs (S), impeller hub or bushing are damaged.
   - Discoloration of (due to overheating).
   - The torque converter is found to be out of specification when performing one of the following torque converter checks:
     - One-Way Clutch Check
     - End Play Check
     - Stator to Turbine Interference Check
     - Stator to Impeller Interference Check
     - Torque Converter Leak Check
   - Evidence of transmission assembly or fluid contamination due to the following transmission or converter failure modes:
     - Major Metallic Failure
     - Multiple Clutches or Clutch Plate Failures
     - Sufficient Component Wear which results in Metallic Contamination

Official Licensed Product
Ford Motor Company

Torque Converter Cleaning and Inspection

1. If the torque converter (7902) is being replaced, continue with Substep 2 of Step 2.

DISASSEMBLY AND ASSEMBLY OF SUBASSEMBLIES (Continued)

2. If the torque converter is not being replaced, the following procedures must be performed:
   1 The torque converter must be thoroughly cleaned.
      - Torque converters with drain plugs can be cleaned by using Torque Converter/Oil Cooler Cleaner.
      - Torque converters without drain plugs can be cleaned by hand. Partially fill the torque converter using only recommended transmission fluid for the applicable transmission. Hand agitate the torque converter and then thoroughly drain the fluid. Refill the torque converter with new fluid specified for transmission, and reinstall.
   2 All in-tank and auxiliary coolers must be thoroughly cleaned by forward and backward flushing; refer to Transmission Fluid Cooler — Backflushing/Cleaningin this section.
   3 All cooler lines must be thoroughly cleaned by backward and forward flushing; refer to Transmission Fluid Cooler — Backflushing/Cleaning in this section.
   4 All cooler bypass valves (CBV), if equipped, must be thoroughly cleaned.
   5 Perform Transmission Fluid Cooler Flow Test; refer to the Transmission Fluid Cooler in this section.
   6 If the transmission cooling system fails the Transmission Fluid Cooler Flow Test, the fluid cooler, cooler bypass valve, and/or cooler lines must be replaced; refer to Section 307-02.
   7 If the coolers are to be replaced, use only factory approved service parts; refer to Section 303-03.

Official Licensed Product
Ford Motor Company

DISASSEMBLY AND ASSEMBLY OF SUBASSEMBLIES (Continued)

Torque Converter Leak Checks

Special Tool(s)

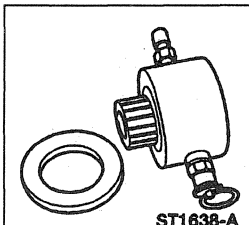 ST1638-A	Torque Converter Leak Check Tool and Gasket 307-F015 (014-R1075) or equivalent

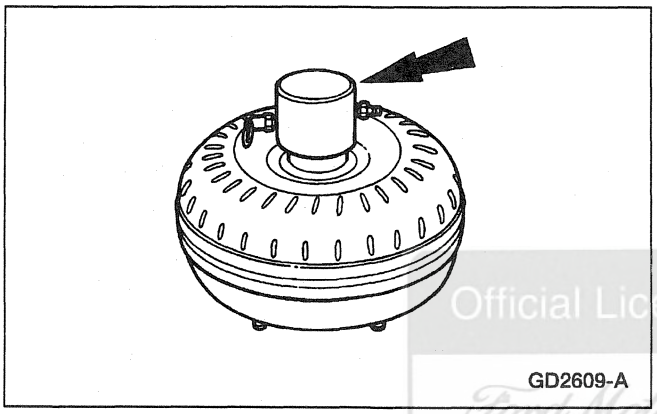
GD2609-A

1. Clean the outside surface of the torque converter (7902).
2. Install Torque Converter Leak Check Tool and Gasket into convert hub.

Official Licensed Product
Ford Motor Company

3. **WARNING: ALWAYS FOLLOW PROPER SAFETY PROCEDURES WHILE USING PRESS.**

   Install the torque converter with the installed leak check tool into the arbor press.

   Secure the press. Apply enough force from the press to seal tool into the torque converter.

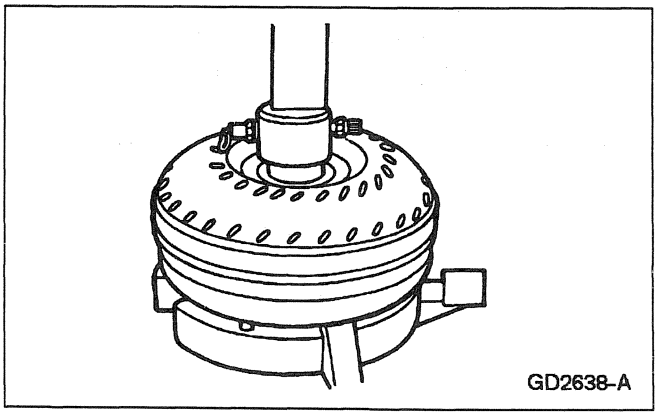
GD2638-A

DISASSEMBLY AND ASSEMBLY OF SUBASSEMBLIES (Continued)

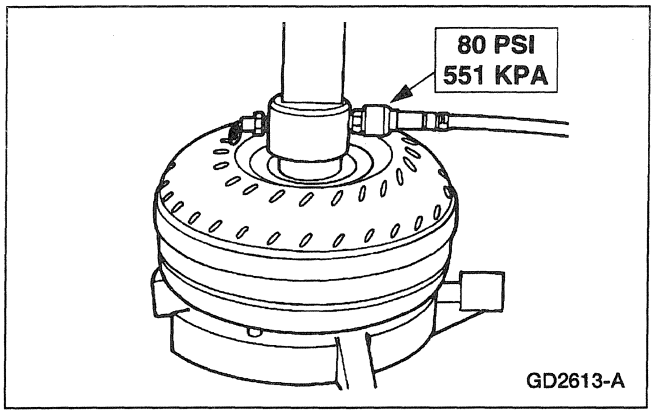

4. **NOTE:** Use clean dry shop air.
   Apply air pressure to valve on Leak Check Tool.

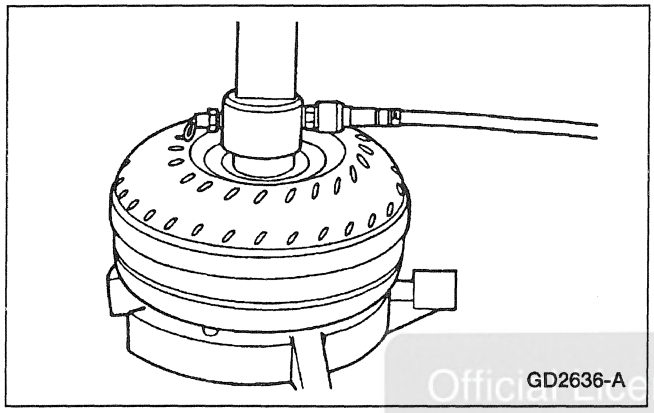

5. With air pressure applied to valve, inspect for leaks at converter hub, seams and studs. A soap bubble solution may be applied around those areas to aid in diagnosis. If leaks are present, replace converter.

Official Licensed Product
Ford Motor Company

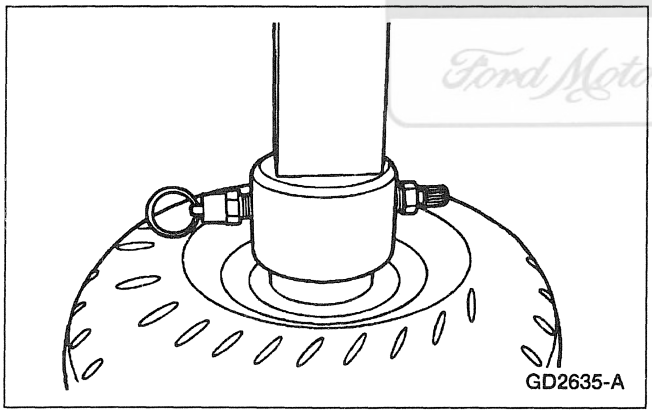

6. Remove the air hose. Release the pressure and then slowly release the press. Remove the torque converter. Remove the tool.

DISASSEMBLY AND ASSEMBLY OF SUBASSEMBLIES (Continued)

Torque Converter One-Way Clutch Check

Special Tool(s)

ST1195-A	Converter Clutch Holding Tool 307-067 (T77L-7902-R)
ST1193-A	Converter Clutch Torquing Tool 307-062 (T76L-7902-C)

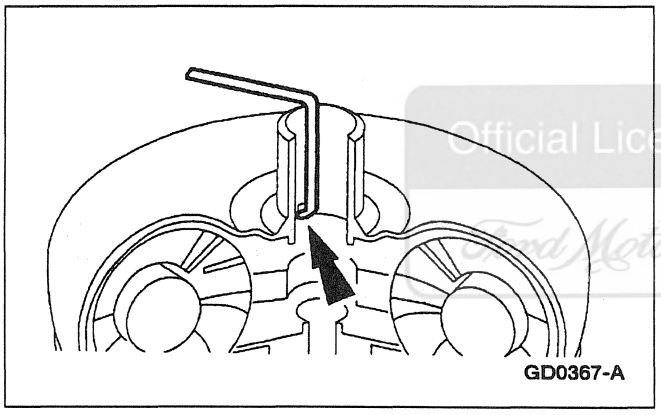

1. Insert the Converter Clutch Holding Tool in one of the grooves in the stator thrust washer.

Official Licensed Product
Ford Motor Company

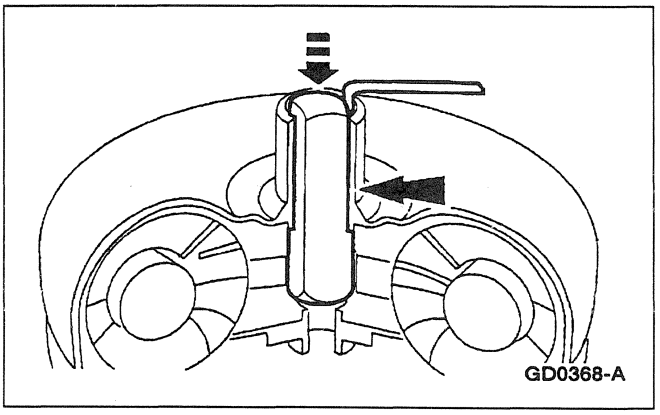

2. Install the Converter Clutch Torquing Tool in the converter pump drive.

DISASSEMBLY AND ASSEMBLY OF SUBASSEMBLIES (Continued)

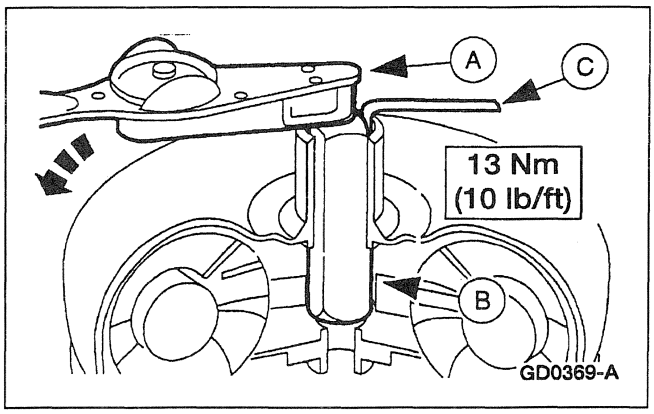

3. Use a (A) torque wrench to turn (B) Converter Clutch Torquing Tool counterclockwise hold (C) Converter Clutch Holding Tool.
   - The converter should lock up and hold torque.
   - The torque converter one-way clutch should rotate freely in the clockwise direction.
   - Try the clutch for lockup and hold in at least five positions.
   - If the torque converter (7902) fails the lockup test torque, replace the torque converter.

Stator to Impeller Interference Check

1. **NOTE:** Front pump support may remain in front pump support and gear during this test.

   Position the front pump support (7A108) with the splines up.

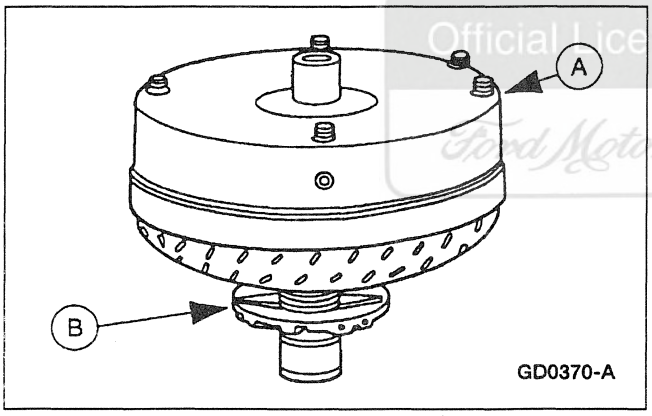

2. Mount (A) torque converter on the (B) front pump support with the splines on the one-way clutch inner race, engaging the mating splines of the front pump support.

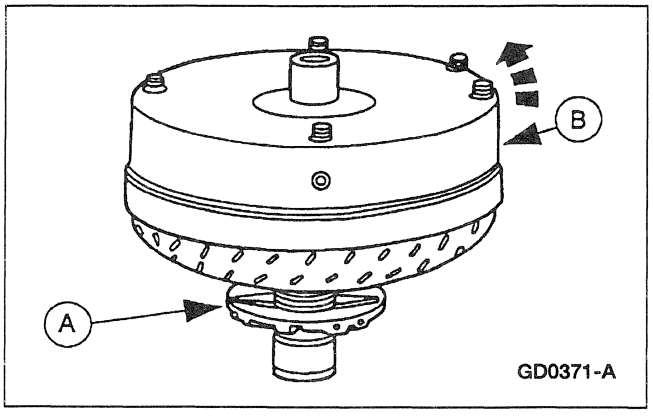

3. Hold the (A) front pump support stationary and rotate the (B) torque converter (7902) counterclockwise.
   - The torque converter should rotate freely with no signs of scraping.
   - If there are signs of scraping, replace the torque converter.

Official Licensed Product
Ford Motor Company

DISASSEMBLY AND ASSEMBLY OF SUBASSEMBLIES (Continued)

Stator to Turbine Interference Check

1. **NOTE:** Front pump support may remain in front pump support and gear during this test.
   Position the torque converter (7902) with the pump drive up.

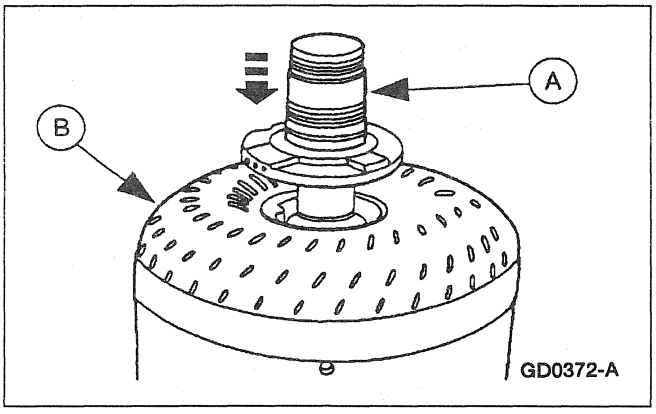

2. Install the (A) front pump support (7A108) to engage the mating splines of the front pump support shaft on the (B) torque converter.

3. Install the forward clutch cylinder and shaft (7F207) engaging the splines with the rear clutch hub.

Official Licensed Product
Ford Motor Company

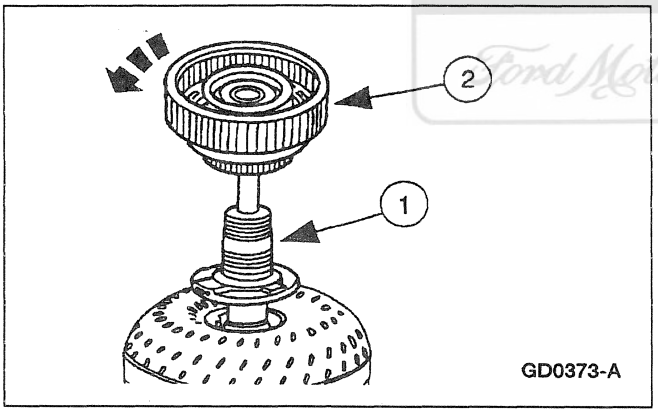

4. Check for stator to turbine interference.
   1 Hold the front pump support stationary.
   2 Attempt to rotate the forward clutch cylinder and shaft.
   - The turbine and torque converter clutch assemblies should rotate in both directions not exceeding maximum torque of 9.5 Nm (7 lb/ft) without any signs of metallic interference or scraping noise.

5. If interference exists, the stator front thrust washer may be worn, allowing the stator to hit the turbine. In such cases, the torque converter must be replaced.
   - The converter crankshaft pilot should be checked for nicks or damaged surfaces that could cause interference when installing the torque converter into the crankshaft. Check the converter front impeller hub for nicks or sharp edges that would damage the pump seal.

DISASSEMBLY AND ASSEMBLY OF SUBASSEMBLIES (Continued)

End Play Check

Special Tool(s)

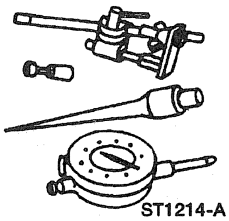 ST1214-A	Dial Indicator With Bracketry 100-002 (TOOL-4201-C) or equivalent
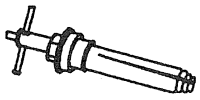 ST1196-A	End Play Checking Tool 307-071 (T80L-7902-A)

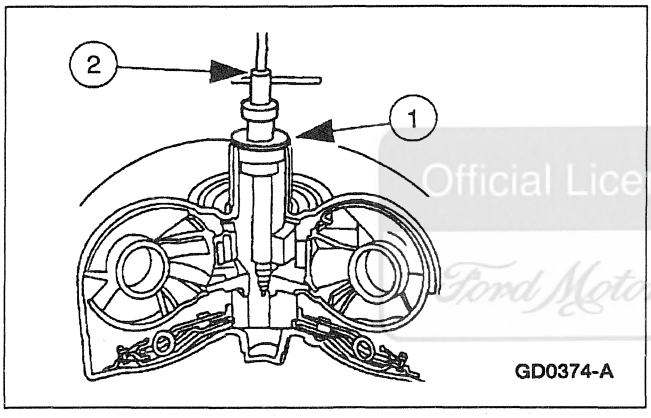

1. Insert End Play Checking Tool into the torque converter pump drive.
   1 Position End Play Checking Tool.
   2 Tighten the inner post until the tool is securely locked.

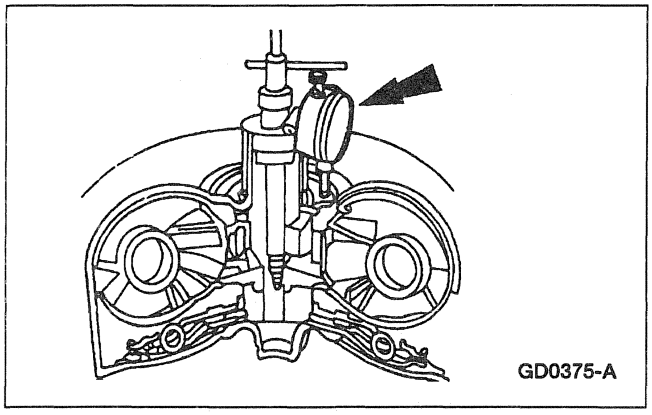

2. Attach Dial Indicator With Bracketry to End Play Checking Tool.
   - Position the dial indicator bottom on the converter pump drive hub and zero the dial.

Official Licensed Product Ford Motor Company

DISASSEMBLY AND ASSEMBLY OF SUBASSEMBLIES (Continued)

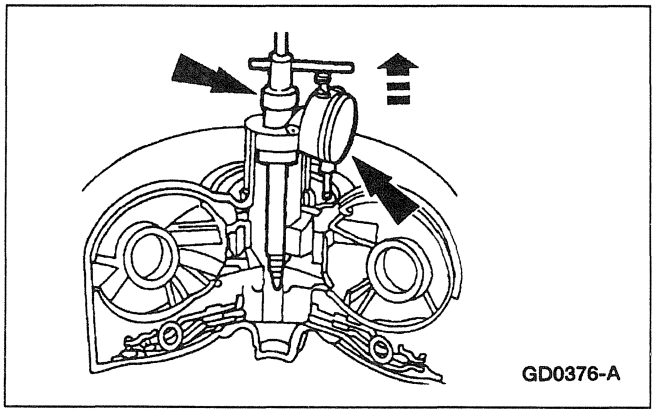

3. Lift up on End Play Checking Tool and note the dial indicator reading.
   - If the reading exceeds end play limits, replace the torque converter (7902).

Torque Converter End Play

New or Rebuilt Torque Converter	Used Torque Converter
0.355-1.04mm (0.014-0.041 inch) Max.	0.355-1.87mm (0.014-0.074 inch) Max.

4. Remove the dial indicator and tool.

Torque Converter Flushing

Special Tool(s)

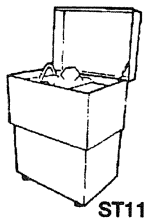 ST1136-A	Torque Converter/Oil Cooler Cleaner 307-F011 (014-00028) or equivalent

Official Licensed Product
Ford Motor Company

NOTE: When the transmission has been repaired for internal damage the torque converter (7902) must be cleaned using a mechanically agitated cleaner.

1. Use Torque Converter/Oil Cooler Cleaner to clean and flush the torque converter.
2. After flushing, drain the remainder of the solvent through the converter access plug.
3. Add 1.9 liter (2 qt.) of clean transmission fluid to the converter and agitate by hand.
4. Thoroughly drain the solution through the converter access plug.

ASSEMBLY

Transmission

Special Tool(s)

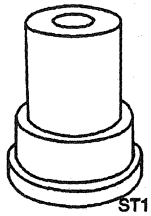 ST1216-A	Case Rear Bushing Replacer 307-077 (T80L-77110-A)
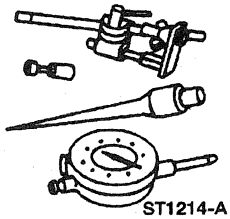 ST1214-A	Dial Indicator With Bracketry 100-002 (TOOL-4201-C) or equivalent
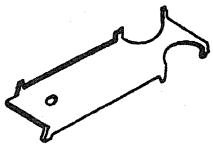 ST1633-A	Digital Transmission Range (DTR) Sensor Alignment Tool T97P-70010-A
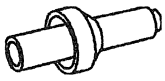 ST1188-A	Extension Housing Seal Replacer 308-002 (T61L-7657-A)
ST1197-A	Gauge Bar 307-072 (T80L-77003-A)
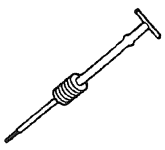 ST1185-A	Impact Slide Hammer 100-001 (T50T-100-A)

(Continued)

Special Tool(s)

ST1210-A	Servo Piston Remover/Replacer 307-251 (T92P-70023-A)
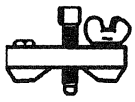 ST1202-A	Servo Piston Selection Tool 307-073 (T80L-77030-A)
ST1199-A	Shift Lever Seal Replacer 307-050 (T74P-77498-A)
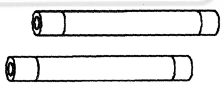 ST1631-A	Torque Converter Handles 307-091 (T81P-7902-C)
ST1636-A	Torque Converter Holding Tool 307-346 (T97T-7902-A)

Official Licensed Product Ford Motor Company

ASSEMBLY (Continued)

NOTE: Before beginning assembly, perform/inspect the following:

When building up subassemblies and assembling the transmission, ALWAYS use new gaskets and seals.

All fasteners must be tightened to the torque specification indicated. In addition to appearing in the section, the necessary torques can be found in the General Specifications Chart.

When building up subassemblies, each component part should be lubricated with clean transmission fluid. It is also good practice to lubricate the subassemblies as they are installed in the case (7005).

Needle bearings, thrust washers and seals should be lightly coated with petroleum jelly during subassembly buildup or transmission assembly.

Many components and surfaces in the transmission are precision machined. Careful handling during disassembly, cleaning, inspection and assembly can prevent unnecessary damage to machined surfaces.

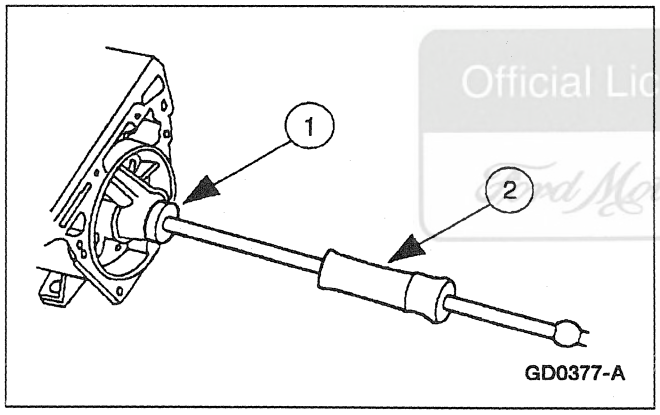

1. If removed, use Case Rear Bushing Replacer and Impact Slide Hammer to install the rear case bushing.
   1 Position the rear case bushing and Case Rear Bushing Replacer from inside of the case.
   2 Thread Impact Slide Hammer into Case Rear Bushing Replacer through the back of case.

2. Place the transmission in the vertical position.

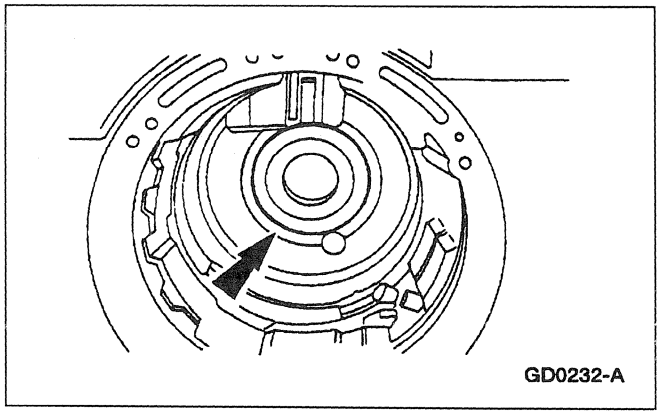

3. Coat No. 9 case rear bearing (7F242) with petroleum jelly and install on the case boss.

Official Licensed Parts
Ford Motor Company

ASSEMBLY (Continued)

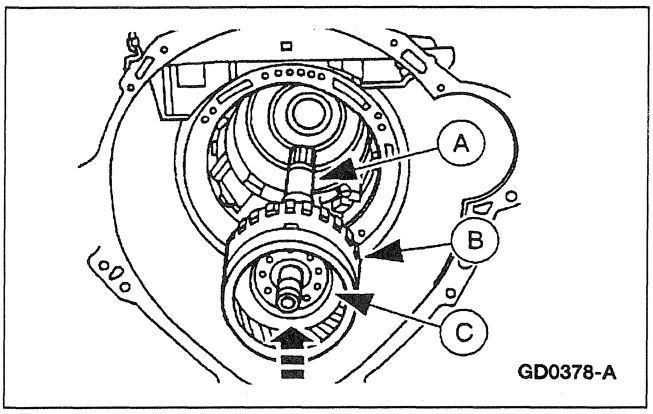

4. ⚠ **CAUTION: Be sure the No. 7 needle bearing and direct clutch hub are installed as shown in the Subassembly section. Internal damage and shift problems may occur.**

   Install the (A) output shaft (7060), (B) output shaft ring gear and the (C) direct clutch as an assembly.

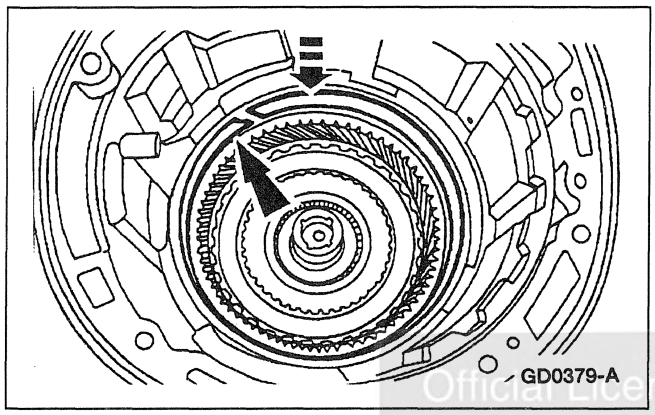

5. Install the reverse band support retaining ring.

Official Licensed Product
Ford Motor Company

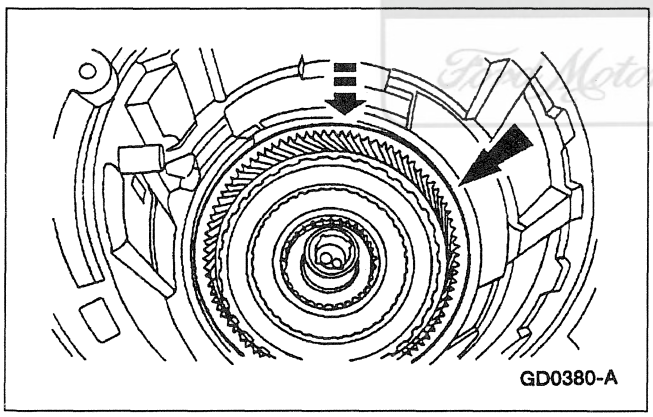

6. **NOTE:** Make sure the band is seated on the anchor pins.

   Install the reverse band.

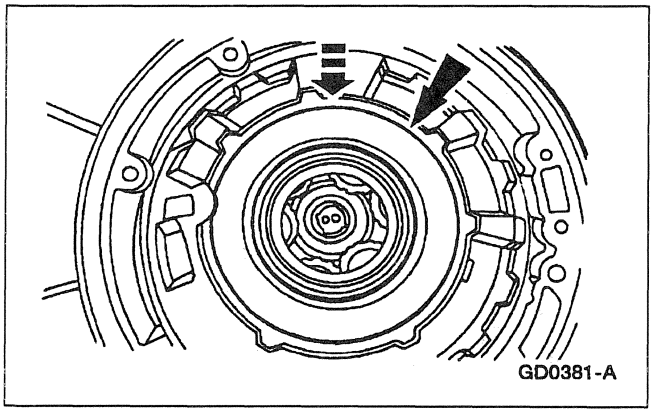

7. **NOTE:** The planetary assembly and planetary gear support cannot be installed unless the notch cut in the planetary gear support is aligned with the overdrive band anchor pin (7F295).

   NOTE: The top of the planetary gear support must be below the snap ring groove.

   Install the planetary assembly and planetary gear support as a unit.

   - Rotate the output shaft to fully seat the planetary assembly.

ASSEMBLY (Continued)

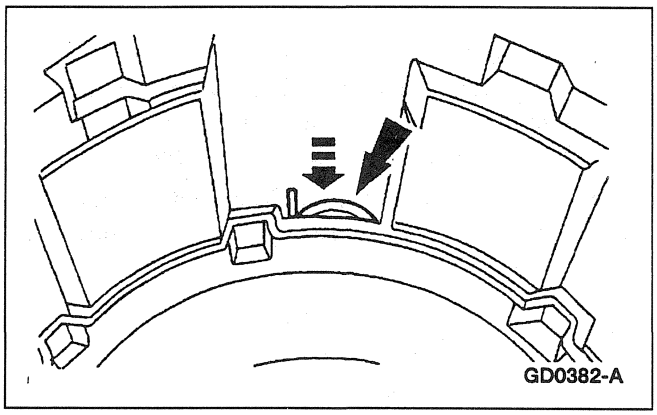

8. Install the case to planet support spring (7F277).

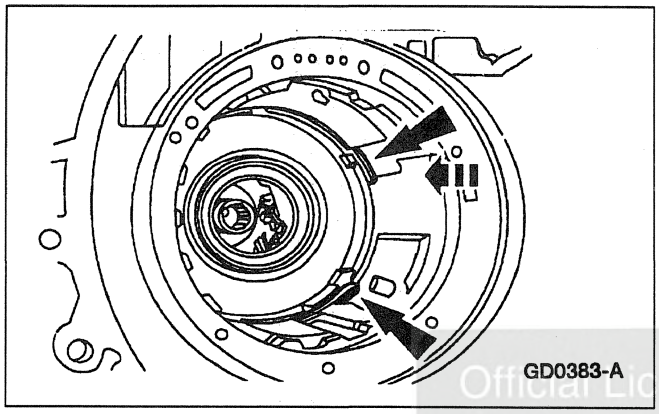

9. Install the center support retaining ring.
   - Reference the retaining ring tabs to the band anchor pin location.

Official Licensed Product
Ford Motor Company

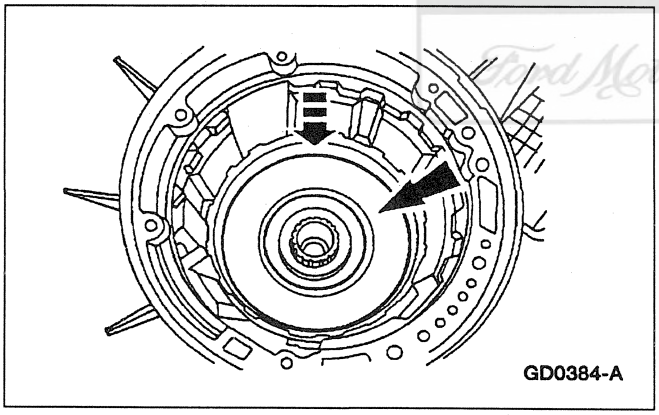

10. Install the forward clutch sun gear, No. 5 forward clutch sun gear bearing and the reverse sun gear.

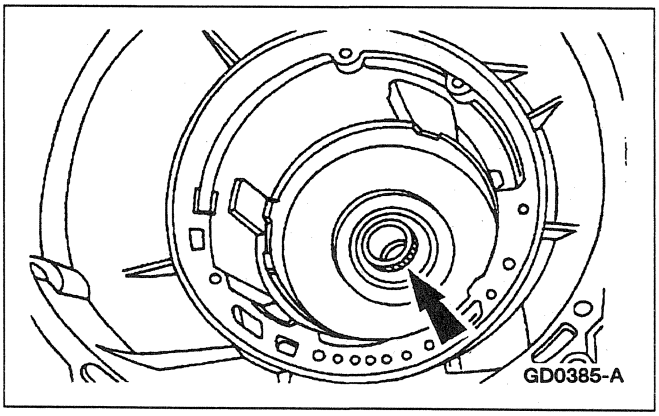

11. Install the No. 4 forward clutch hub bearing.

ASSEMBLY (Continued)

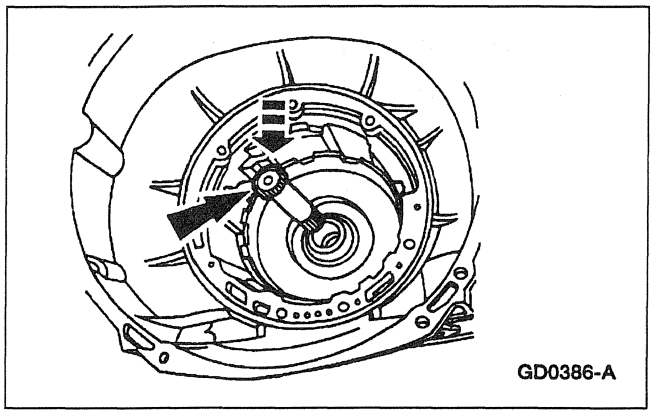

12. Install the intermediate stub shaft.

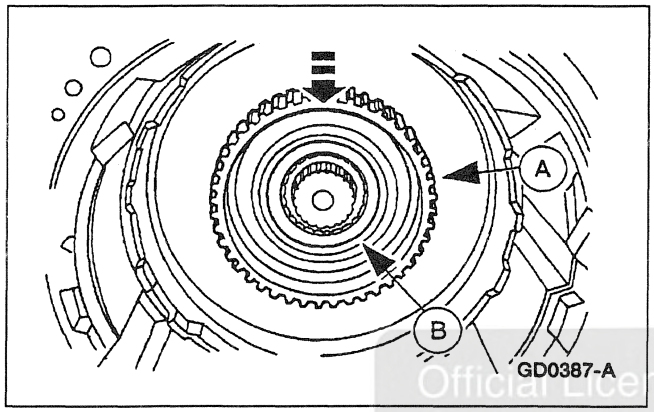

13. Install the (A) forward clutch hub and the (B) No. 3 forward clutch hub front bearing (7F231).

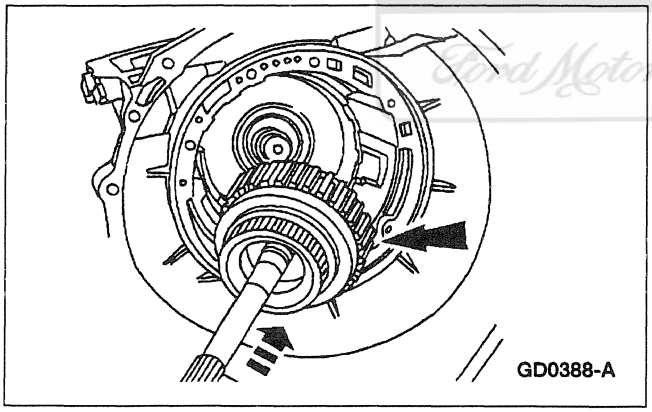

14. Install the forward clutch assembly.

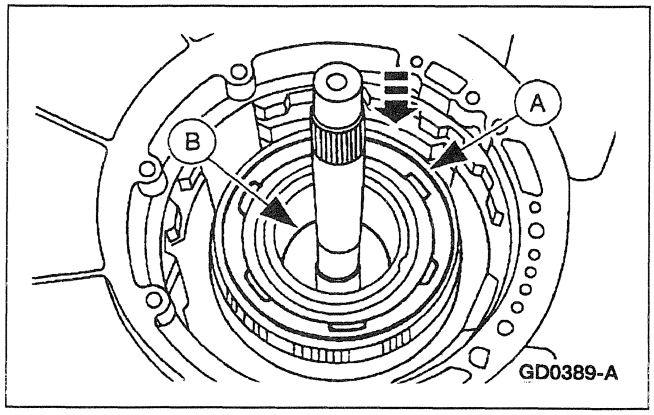

15. **NOTE:** Make sure the reverse clutch cylinder lugs are completely seated in the notches of the reverse sun gear.

    Install the (A) reverse clutch cylinder assembly and the (B) No. 2 forward clutch bearing.

Official Licensed Product
Ford Motor Company

ASSEMBLY (Continued)

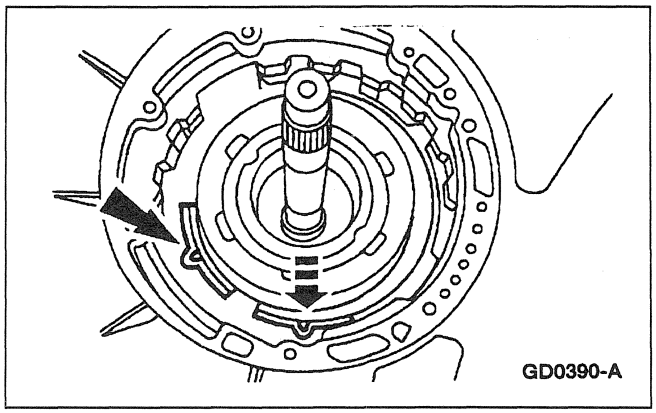

16. Install the overdrive band (7F196).
    - Position the overdrive band pocket onto the anchor pin.

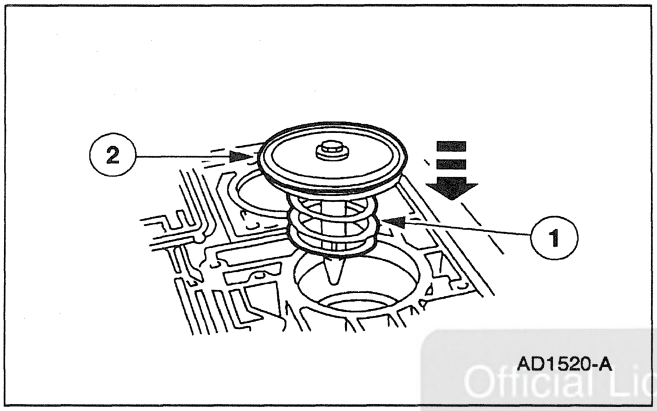

17. Install the overdrive servo spring.
    1 Install the overdrive servo piston return spring (7F201).
    2 Install the overdrive servo piston (7F200).

Official Licensed Product
Ford Motor Company

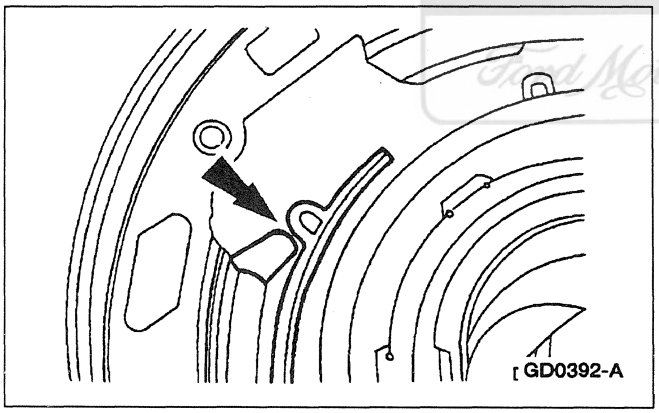

18. Verify the tip of the piston assembly engages the pocket of the overdrive band.

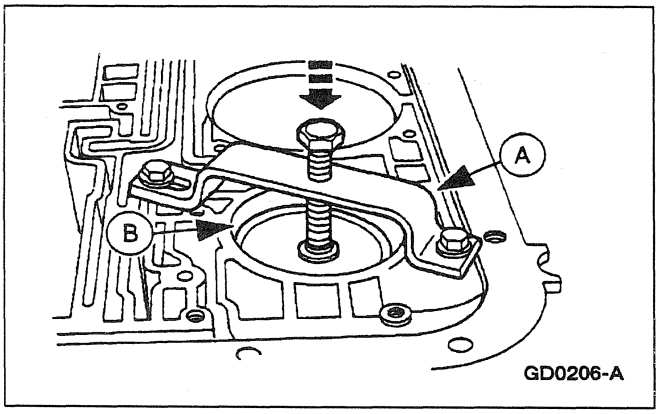

19. Use (A) Servo Piston Remover/Replacer to compress the overdrive servo assembly and install the (B) overdrive servo retaining ring.

ASSEMBLY (Continued)

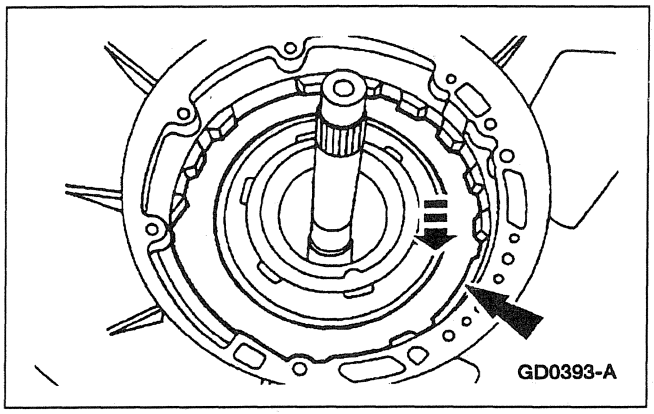

20. Install the intermediate clutch pressure plate.

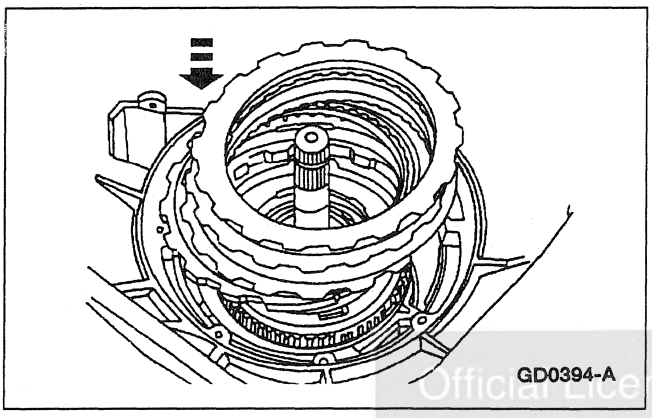

21. Install the intermediate clutch pack and selective steel plate.

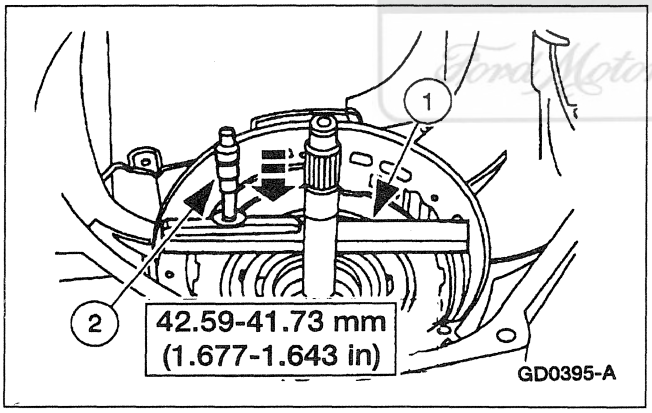

22. Check the intermediate clutch clearance.
    1. Position Gauge Bar on the pump case mounting surface.
    2. Maintaining downward pressure, use a depth micrometer to measure and verify intermediate clutch clearance is within specification.

    If the intermediate clutch is not within specification, install a correct selective plate.

Selective Steel Plates

Specification
1.80-1.7mm (0.071-0.067 inch)
2.05-1.95mm (0.081-0.077 inch)
2.31-2.20mm (0.091-0.087 inch)
2.56-2.46mm (0.101-0.097 inch)

Official Licensed Product
Ford Motor Company

ASSEMBLY (Continued)

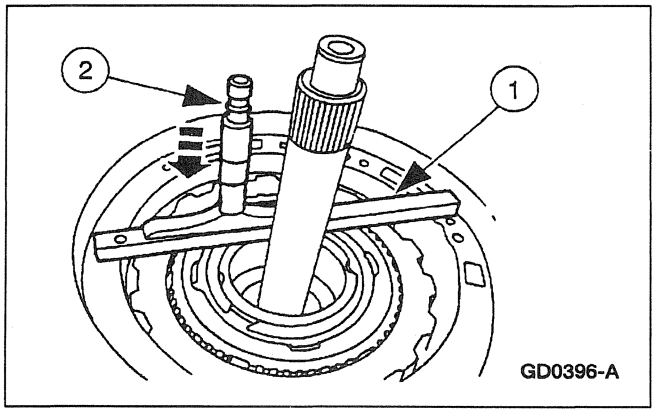

23. Measure end clearance for the No.1 front pump thrust washer.
    1 Position Gauge Bar on the pump case mounting surface.
    2 Maintaining downward pressure, use a depth micrometer to measure end play clearance.

    Use the No.1 thrust washer chart to select the proper washer.

No.1 Thrust Washer Chart

Depth	Thickness	Color Code
37.706-38.184 mm (1.485-1.503 inch)	1.270-1.372 mm (0.050-0.054 inch)	Green
38.185-38.641 mm (1.504-1.521 inch)	1.727-1.829 mm (0.068-0.072 inch)	Yellow
38.642-39.073 mm (1.522-1.538 inch)	2.159-2.261 mm (0.085-0.089 inch)	Natural
39.074-39.505 mm (1.539-1.555inch)	2.591-2.692 mm (0.102-0.106 inch)	Red
39.506-40.165 mm (1.556-1.581 inch)	3.023-3.124 mm (0.119-0.123 inch)	Blue

Official Licensed Reader
Ford Motor Company

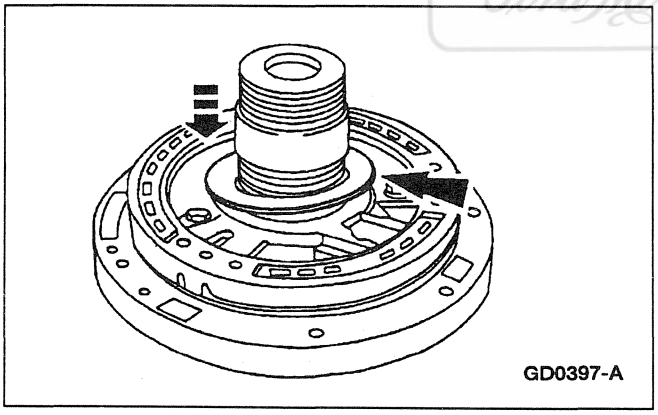

24. Install the No.1 front pump support thrust washer.
    - Use petroleum jelly to hold the washer in place.

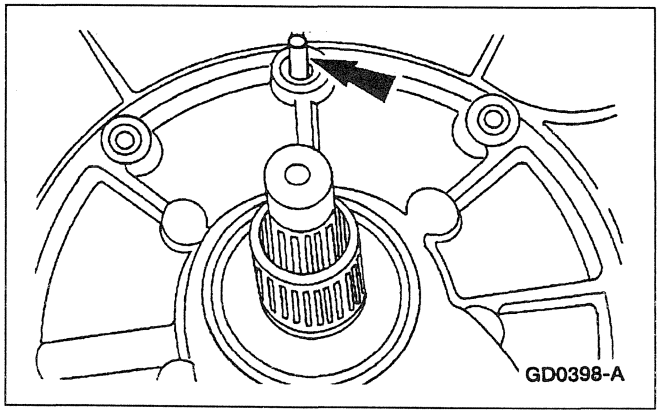

25. Install an alignment pin at the top of the case.

ASSEMBLY (Continued)

26. **NOTE:** Make sure the gasket is positioned correctly and the case passages are not covered.
    Install the pump gasket.

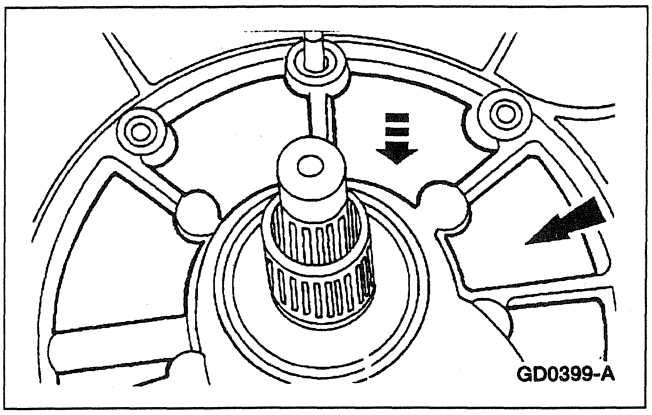

27. **NOTE:** To aid assembly, shake the input shaft while pushing down on the pump.
    Install the pump assembly.

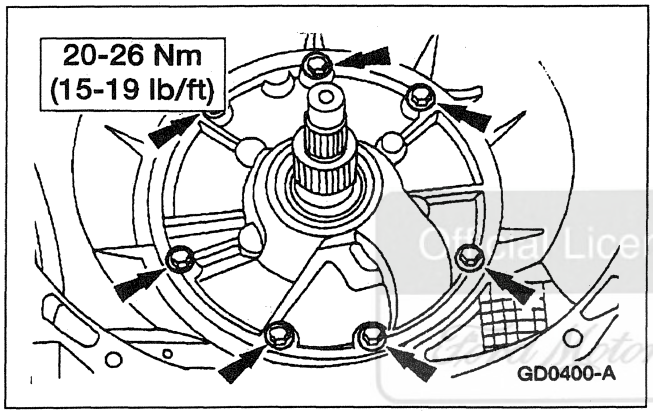

28. Remove the alignment pin and install the front pump bolts.
    - Alternate bolt tightening to set the pump.

Official Licensed Product
Ford Motor Company

29. Rotate the transmission to the horizontal position.

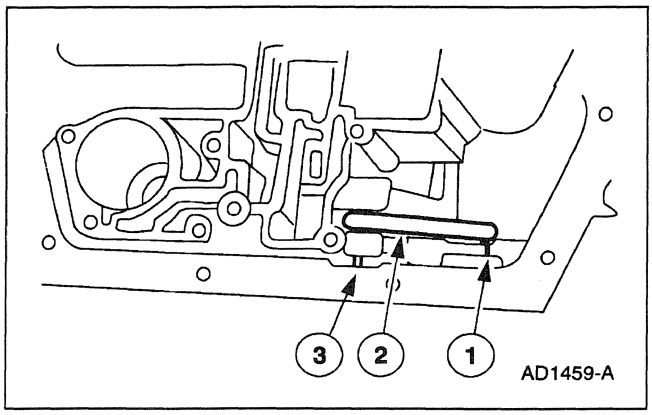

30. Install the parking pawl.
    1 Position the parking pawl return spring (7D070).
    2 Position the parking pawl (7A441).
    3 Install the parking pawl shaft (7D071).

ASSEMBLY (Continued)

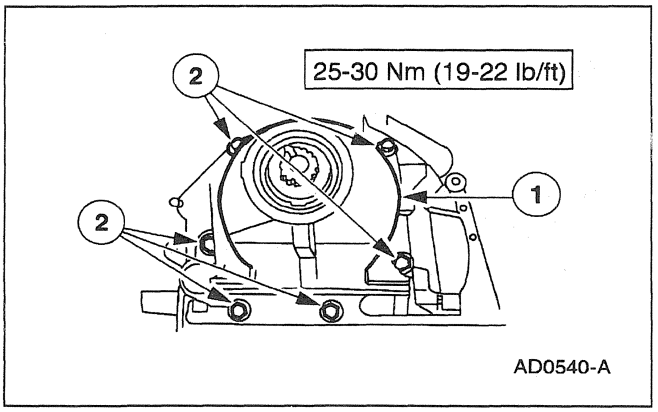

31. Install a new extension housing gasket (7086) and the extension housing (7A039).
    1 Position the extension housing.
    2 Install the four bolts and two nuts.

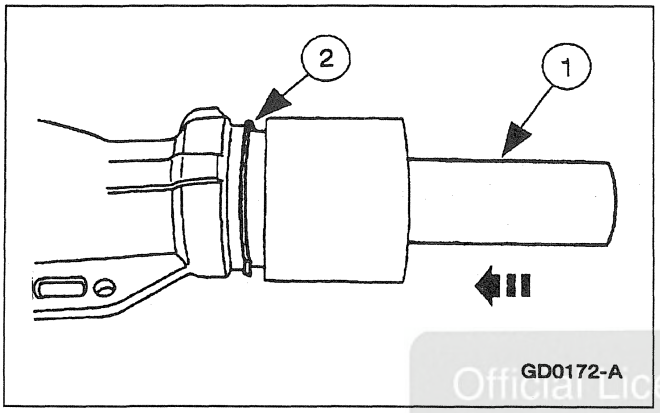

32. Install a new extension housing seal.
    1 Position Seal Replacer and the seal.
    2 Install the extension housing seal.

Official Licensed Product

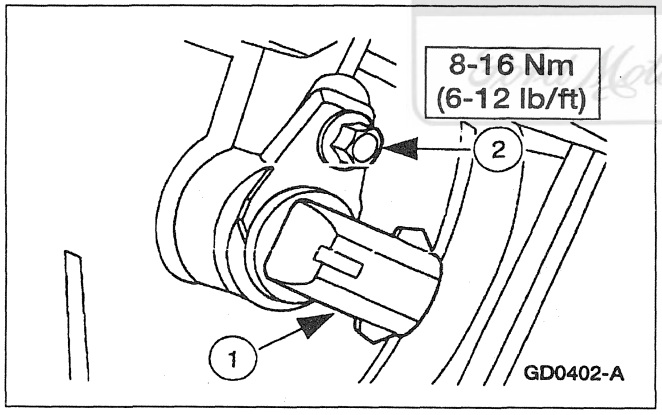

33. Install the OSS.
    1 Position the OSS.
    2 Install the bolt.

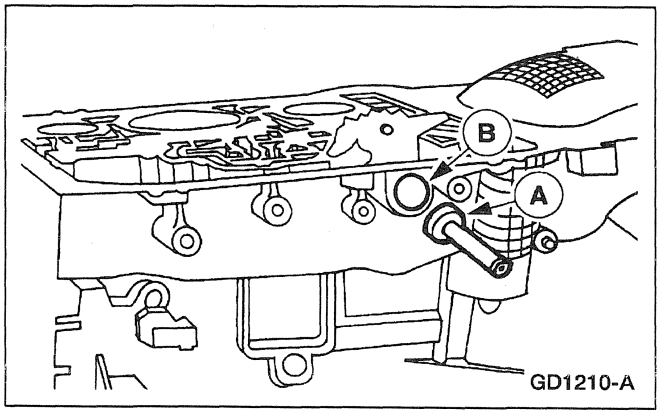

34. Use (A) Shift Lever Seal Replacer to install the (B) manual control lever seal.

ASSEMBLY (Continued)

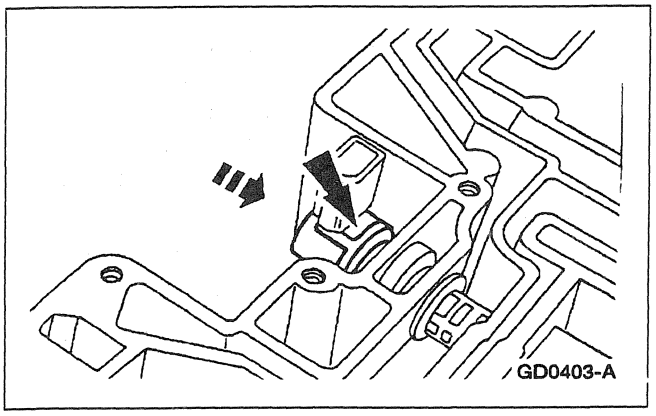

35. **NOTE:** Lubricate the EPC solenoid O-rings with transmission fluid.
    Install the EPC solenoid.

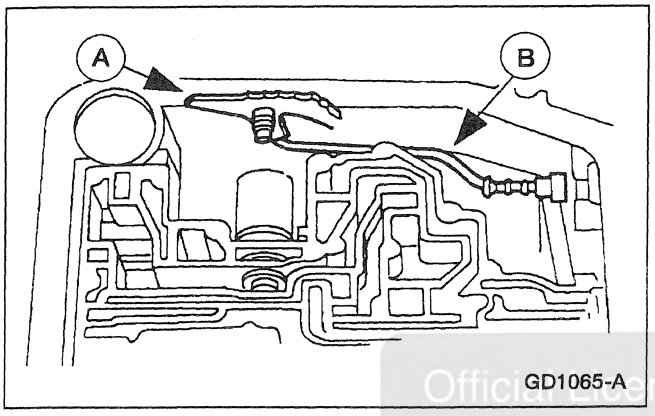

36. Install the (A) manual valve detent lever (7A115) and (B) parking lever actuating rod (7A232).

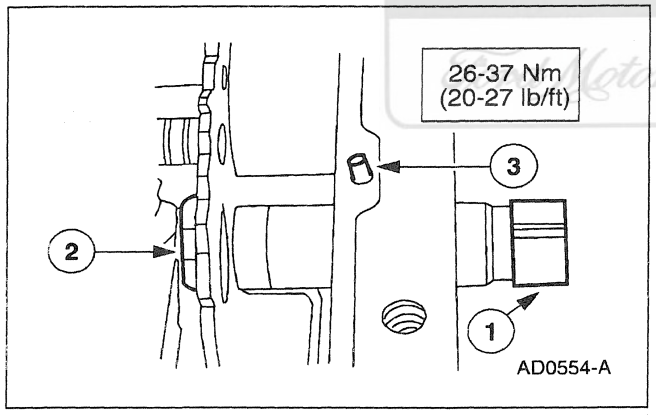

37. Install the manual control lever shaft.
    1 Slide the manual control shaft into the case.
    2 Install the manual lever shaft inner nut.
    3 Install the manual lever shaft retaining pin (7B210).

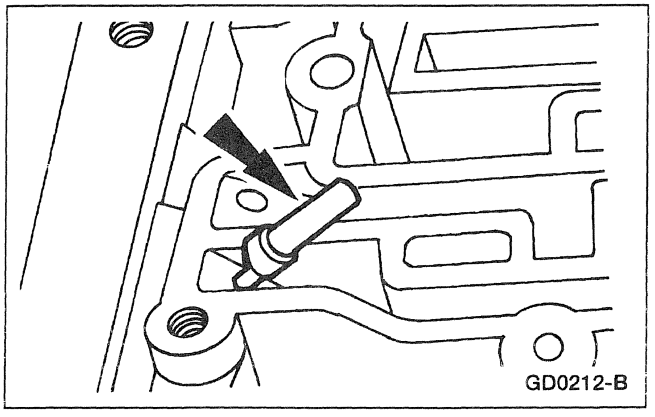

38. Install the fluid screen.

Official Licensed Product
Ford Motor Company

ASSEMBLY (Continued)

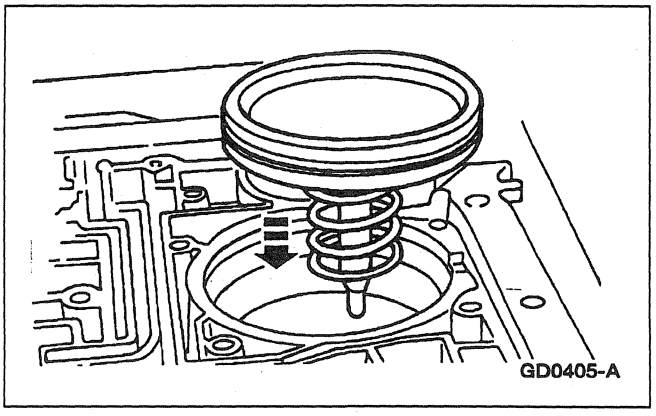

39. **NOTE:** This is not an ordinary installation procedure and does not compensate for band wear. When piston and rod assembly replacement becomes necessary, or when the reverse band has been replaced, the reverse piston and rod length must be adjusted.

    NOTE: Lubricate the reverse piston seal to facilitate assembly and prevent damage to the seal.

    Install the reverse servo piston and return spring.

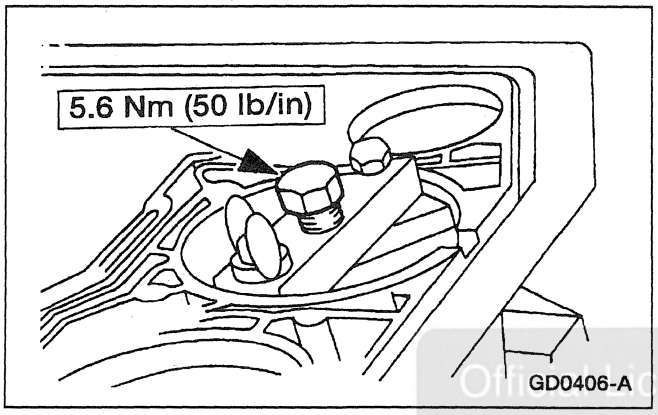

40. Install Servo Piston Selection Tool.
    - Tighten the bolt.

Official Licensed Product
Ford Motor Company

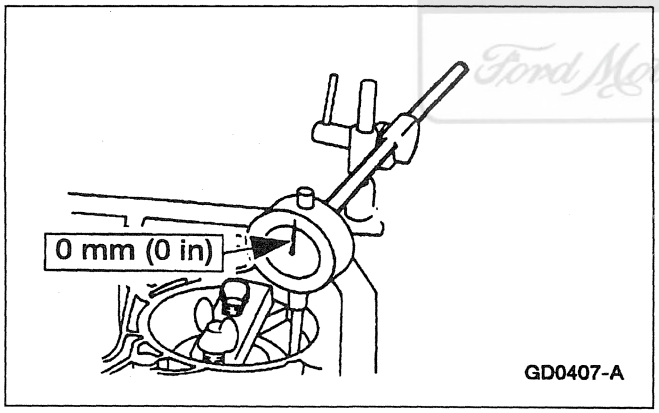

41. Attach Dial Indicator With Bracketry.
    - Position the indicator stem on the flat portion of the reverse servo piston and zero the dial indicator.

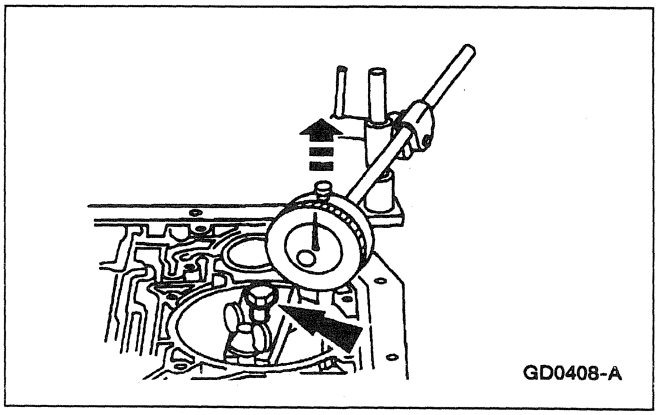

42. Loosen the bolt until the piston stops against the tool.

ASSEMBLY (Continued)

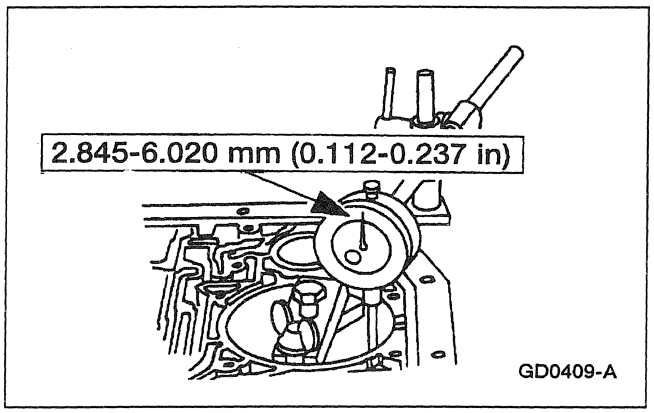

43. Verify the amount of piston travel on the dial indicator is within specification.

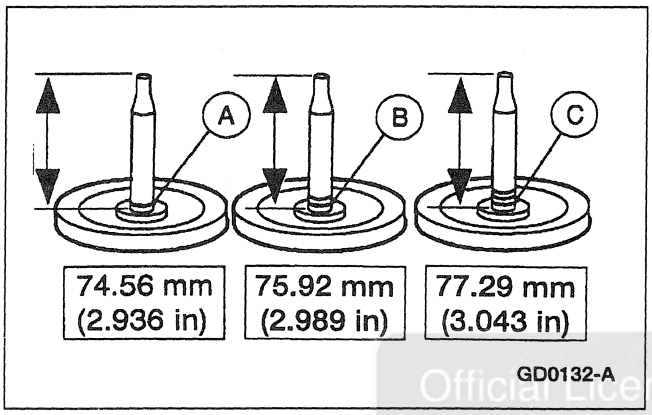

44. If piston travel is not within specification, select the proper servo assembly (A) one groove, (B) two grooves, or (C) three grooves to bring the servo piston travel within specification.

Official Licensed Product
Ford Motor Company

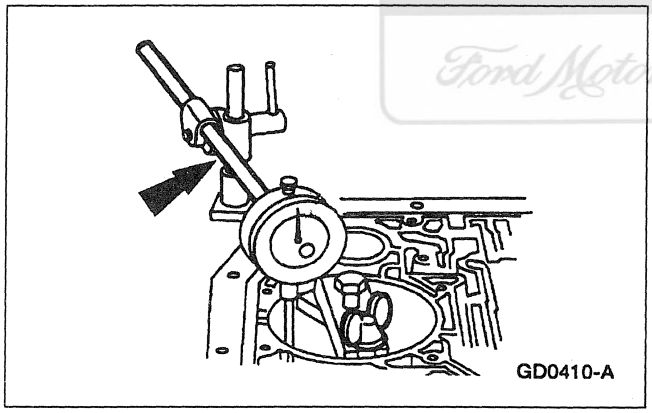

45. Remove the Dial Indicator and Servo Selection Tool.

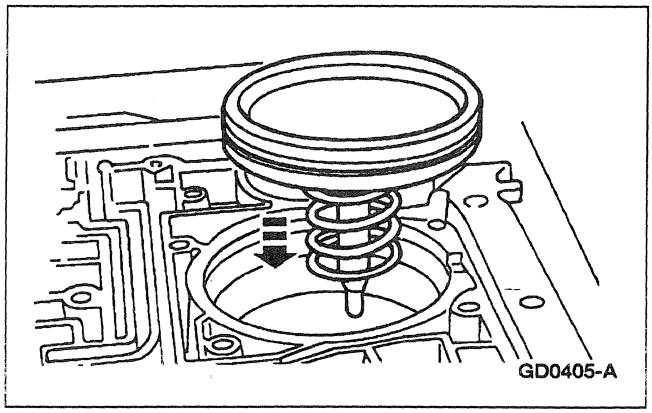

46. Install the proper servo rod, piston assembly and the reverse servo piston cover and seal.

ASSEMBLY (Continued)

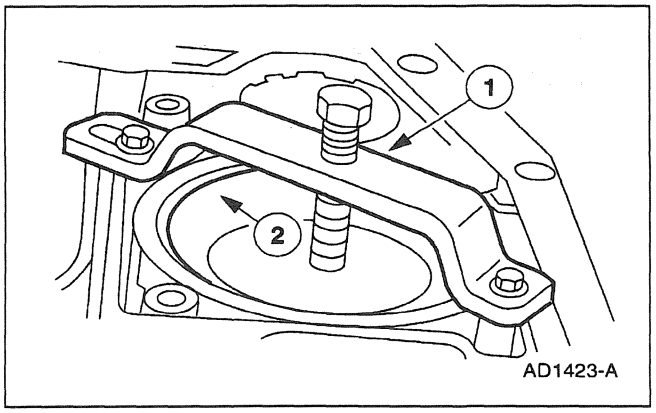

47. Use the Servo Piston Remover/Replacer to install the reverse servo retaining ring.
    1 Compress the reverse band servo.
    2 Install the reverse band servo retaining ring.

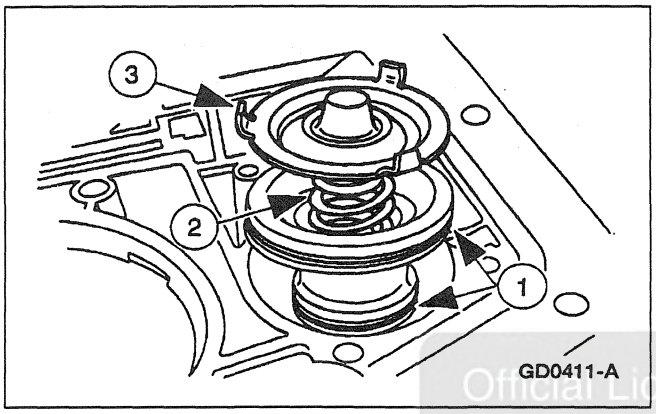

48. Install the 2-3 accumulator assembly.
    1 Install the accumulator piston (7F251).
    2 Install the accumulator piston spring (7F285).
    3 Install the accumulator spring retainer.

Official Licensed Product
Ford Motor Company

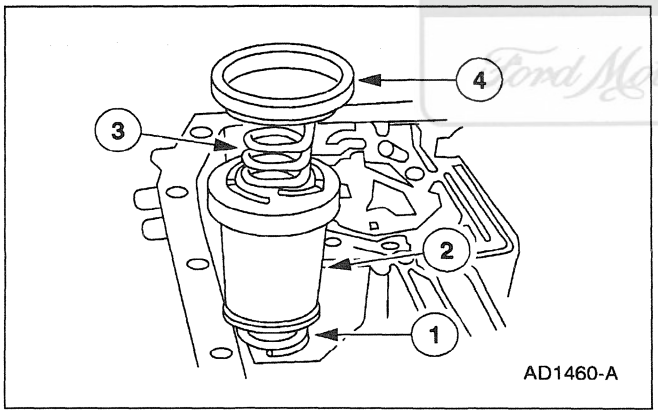

49. Install the 1-2 accumulator piston assembly.
    1 Install the 1-2 accumulator upper spring.
    2 Install the 1-2 accumulator.
    3 Install the 1-2 accumulator lower spring.
    4 Install the 1-2 accumulator cover and seal.

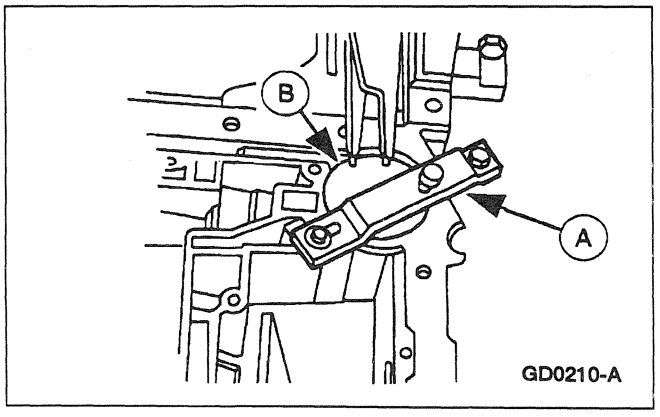

50. Use (A) Servo Piston Remover/Replacer to install the (B) 1-2 accumulator retaining ring.

ASSEMBLY (Continued)

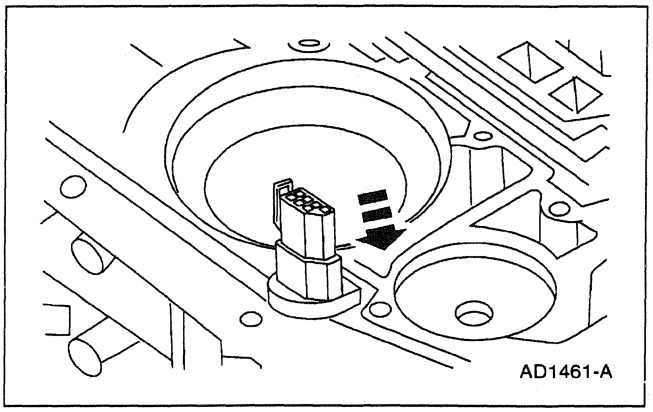

51. **NOTE:** The tab on the electrical connector is secured by main control valve body.

    Install the electrical connector into case.

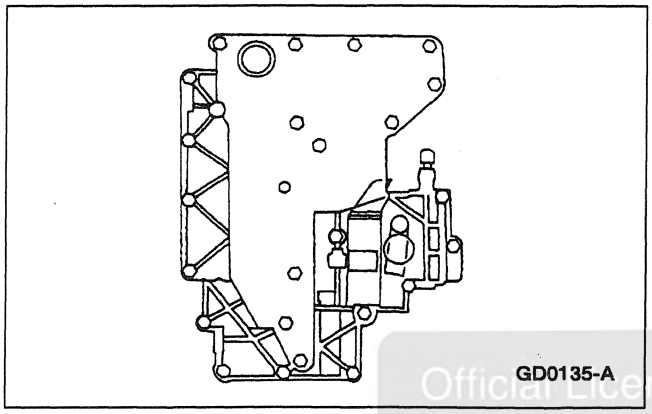

52. **NOTE:** The alignment bolts are valve body assembly bolts and are in the valve body.

    Align the main control valve body alignment bolts and position the main control valve body.

Official Licensed Product
Ford Motor Company

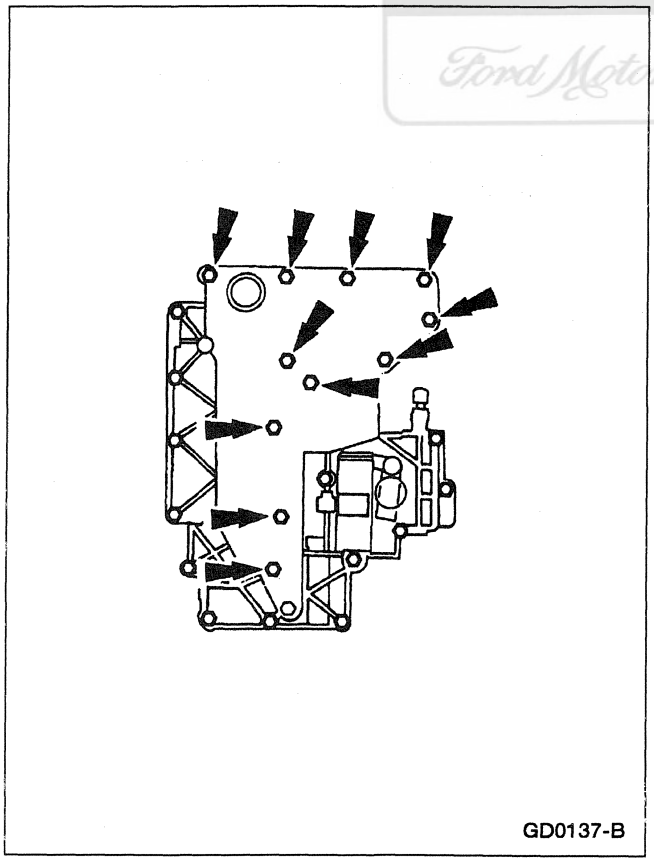

53. **NOTE:** The main control valve body bolts will be tightened in later steps.

    Loosely install the 11 long main control valve body bolts.

ASSEMBLY (Continued)

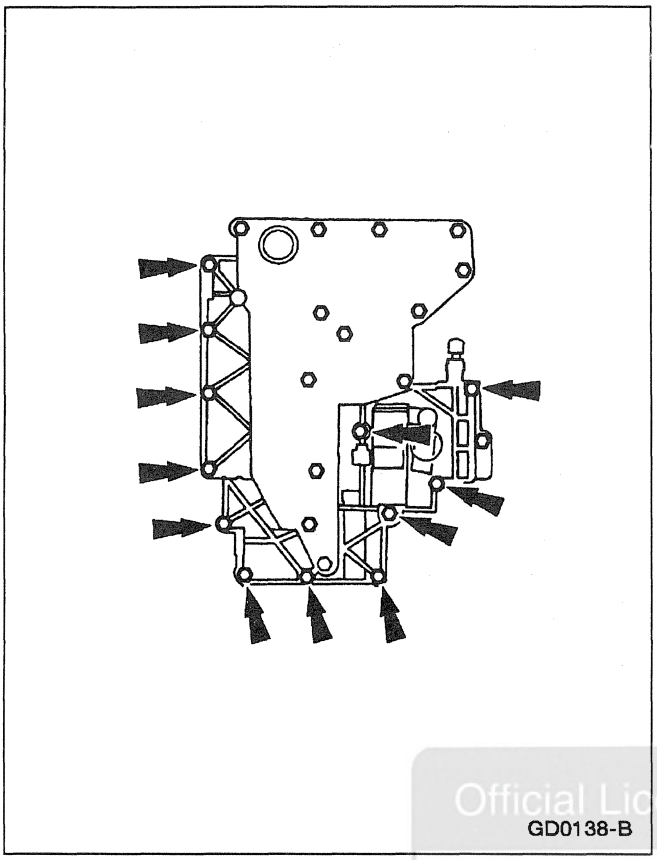

54. **NOTE:** The main control valve body bolts will be tightened in later steps.

    Loosely install the 12 short main control valve body bolts.

Official Licensed Product
Ford Motor Company

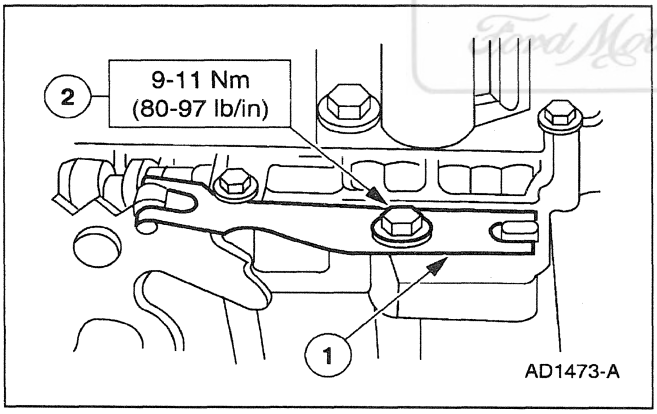

55. Install the manual control valve detent lever spring.
    1 Position the manual control valve detent lever spring.
    2 Install the bolt.

ASSEMBLY (Continued)

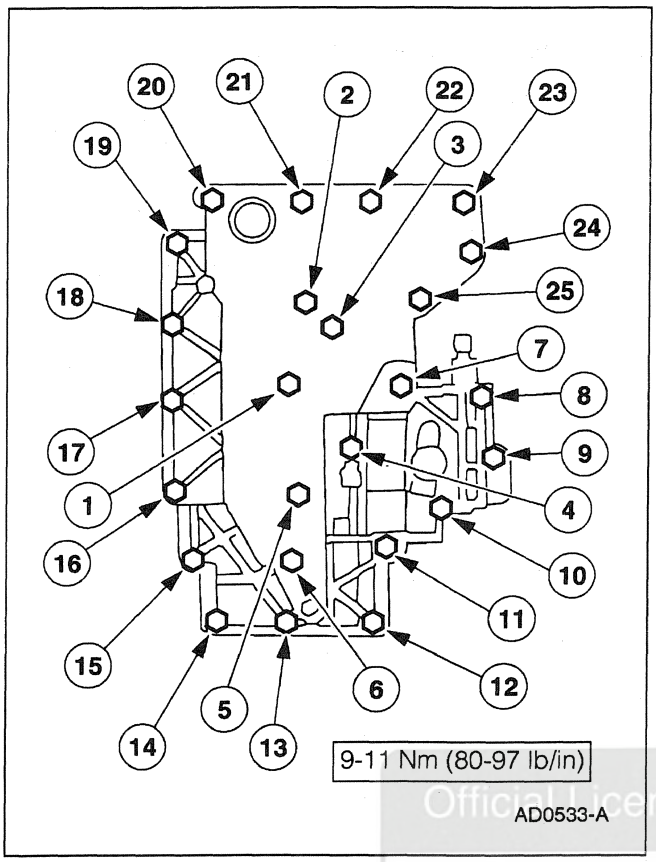

56. Tighten the bolts in the sequence shown.

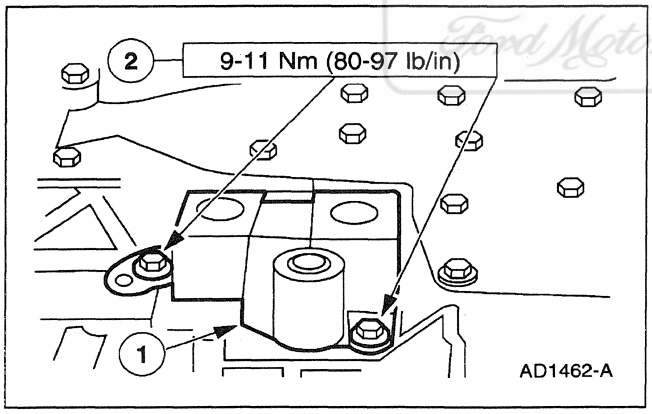

57. Install the shift solenoid and the torque converter clutch (TCC) solenoid.
    1. Install the shift solenoid and the torque converter clutch (TCC) solenoid.
    2. Install the bolts.

Official Licensed Product
Ford Motor Company

ASSEMBLY (Continued)

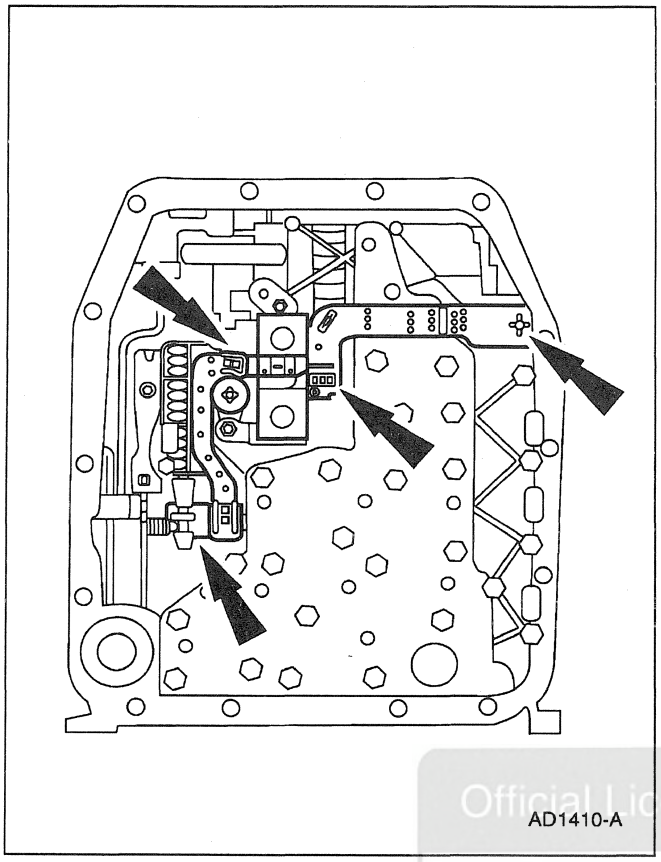
AD1410-A

58. Connect the molded lead frame to the sensors.
    - Connect the bulkhead inter connector.
    - Connect the electronic pressure control (EPC) solenoid.
    - Connect the torque converter clutch (TCC).
    - Connect the shift solenoid SSA/SS1 and SSB/SS2.

Official Licensed Product
Ford Motor Company®

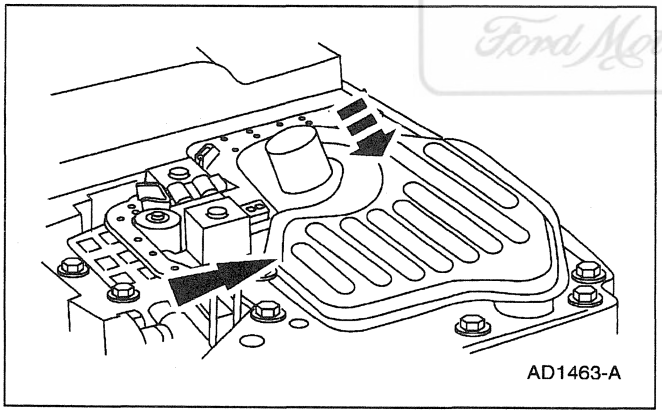
AD1463-A

59. Install the fluid filter and seal assembly.

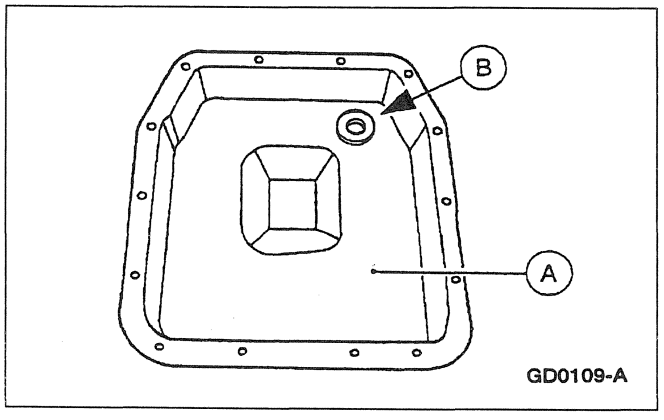

GD0109-A

60. Position the (B) pan magnet onto the (A) fluid pan.

ASSEMBLY (Continued)

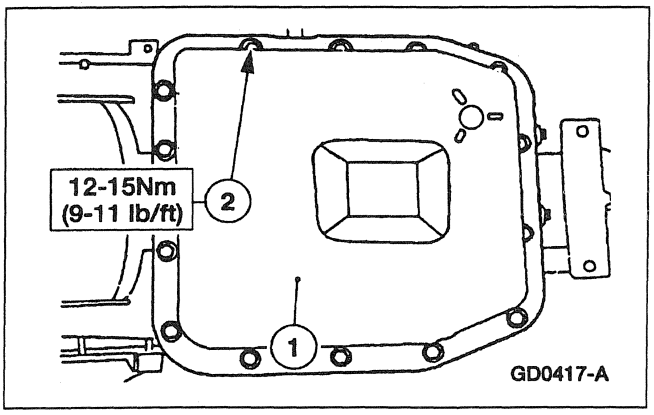

61. **NOTE:** The pan gasket is reusable, clean and inspect for damage; if not damaged, the gasket should be reused.

    Install the fluid pan.

    1 Position the transmission fluid pan.

    2 Install the 14 transmission fluid pan bolts.

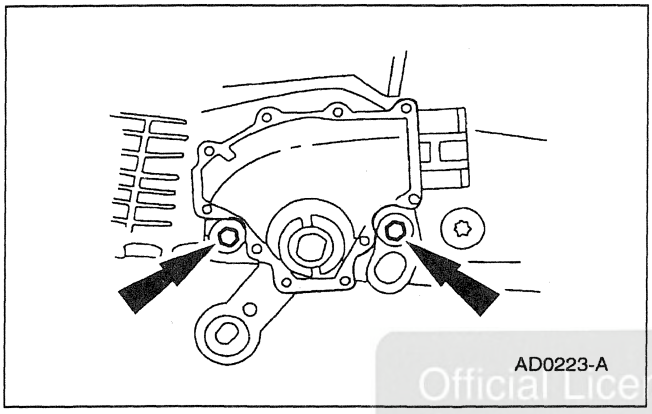

62. Install the digital TR sensor.

    1 Install the digital TR sensor.

    2 Loosely install the digital TR bolts.

Official Licensed Product
Ford Motor Company®

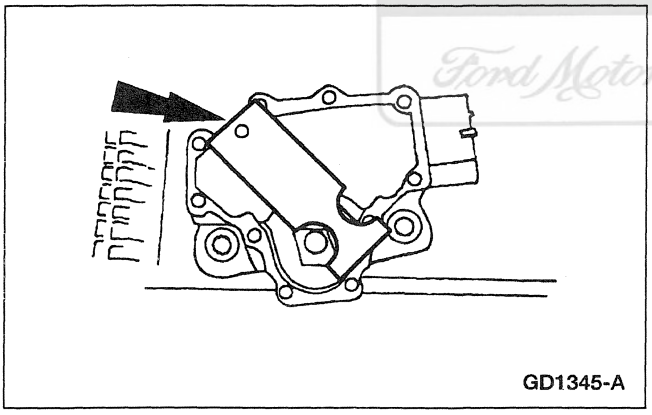

63. **NOTE:** Manual shift lever must be in the neutral position.

    Use the Digital Transmission Range (TR) Sensor Alignment Tool to align the digital TR sensor slots.

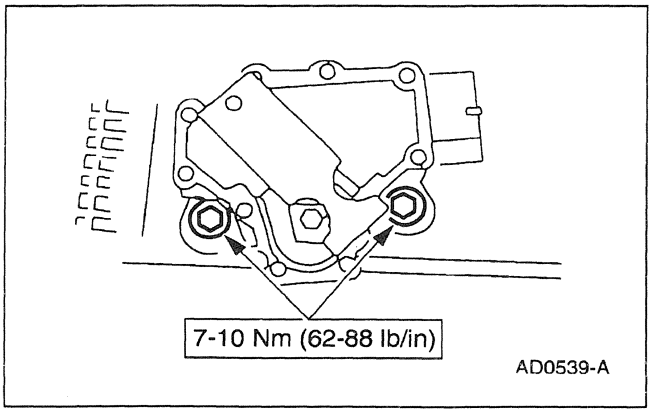

64. Tighten the bolts.

ASSEMBLY (Continued)

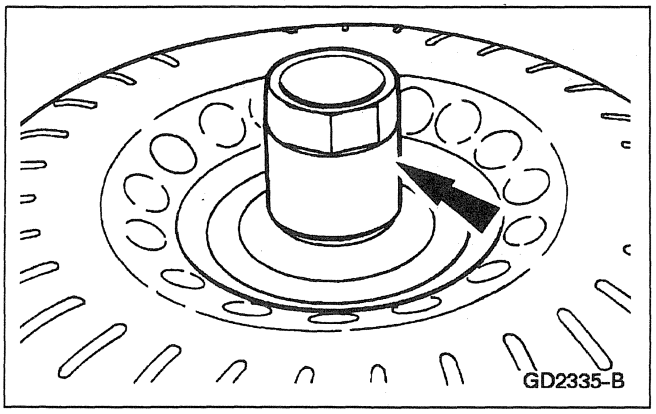

65. Lightly lubricate the converter hub with MERCON® V Automatic Transmission Fluid, meeting MERCON V specification.

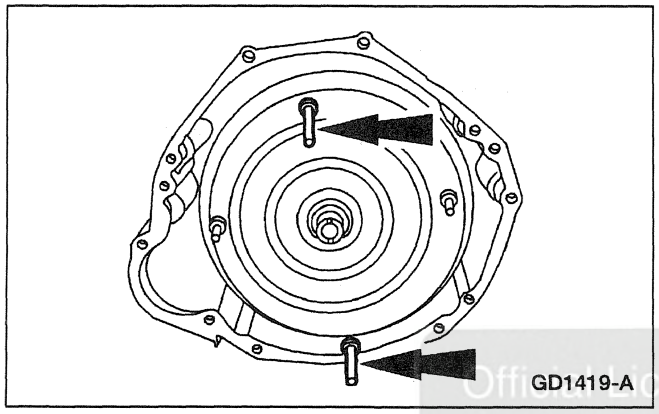

66. **WARNING: THE TORQUE CONVERTER (7902) CAN FALL OUT IF THE TRANSMISSION IS TIPPED.**

CAUTION: Do not damage the pump drive gear O-ring when installing the torque converter.

CAUTION: Make sure the converter hub is fully engaged in the front pump support and gear and rotates freely. Do not damage the hub seal.

CAUTION: If the torque converter slides out, the hub seal may be damaged.

Using Torque Converter Handles, install the torque converter.

Ford Motor Company

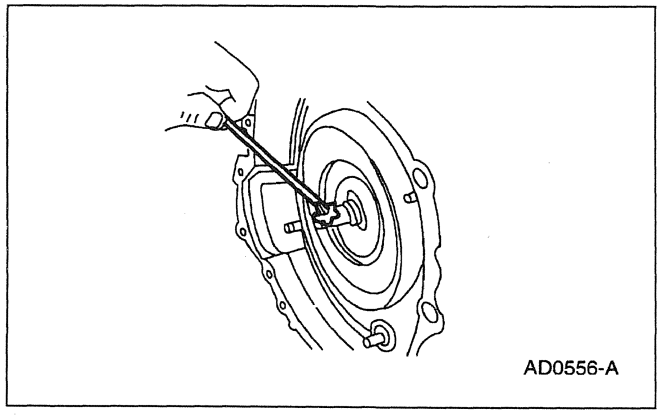

67. Use Ford Multi-Purpose Grease DOAZ-19584-AA meeting Ford specification ESB-M1C93-B. Lubricate the torque converter pilot hub.

ASSEMBLY (Continued)

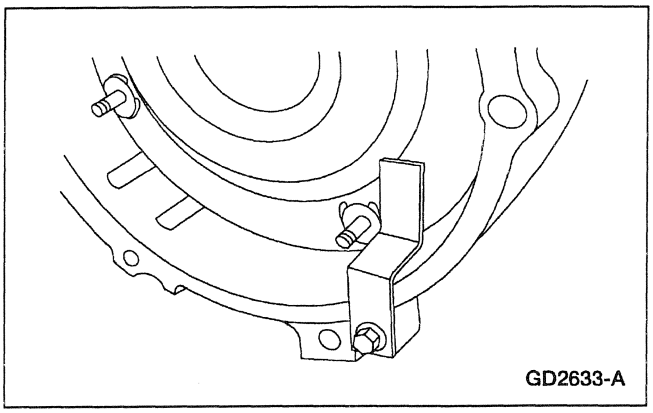

68. **WARNING: THE TORQUE CONVERTER IS HEAVY AND MAY RESULT IN INJURY IF IT FALLS OUT OF THE TRANSMISSION. SECURE THE TORQUE CONVERTER IN THE TRANSMISSION.**

    Install Torque Converter Holding Tool.

INSTALLATION

Transmission

1. **CAUTION: During this move, to avoid damage, do not allow the transmission to get into a nose-down position as this will cause the torque converter to move forward and disengage from the pump gear. The converter housing is piloted into position by dowels in the rear of the engine block. The torque converter must rest squarely against the flywheel. This indicates that the converter pilot is not binding in the engine crankshaft (6303).**

   Position and secure the transmission on High-Lift Transmission Jack.

   - Raise and position the transmission into the vehicle.
   - Position the transmission onto a transmission jack.

2. **NOTE:** Make sure the torque converter (7902) is fully seated in the transmission before positioning the transmission to the engine.

   Raise and position the transmission to the vehicle.

   - Align the orange balancing marks on the converter stud and the flywheel bolt hole.

Official Licensed Reproduction
Ford Motor Company

INSTALLATION (Continued)

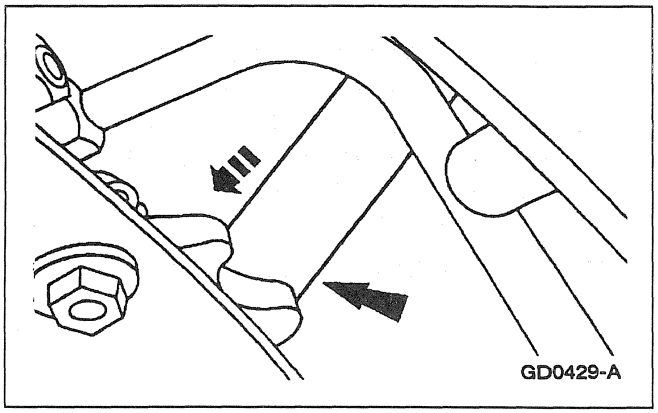

3. Install the fluid filler tube.

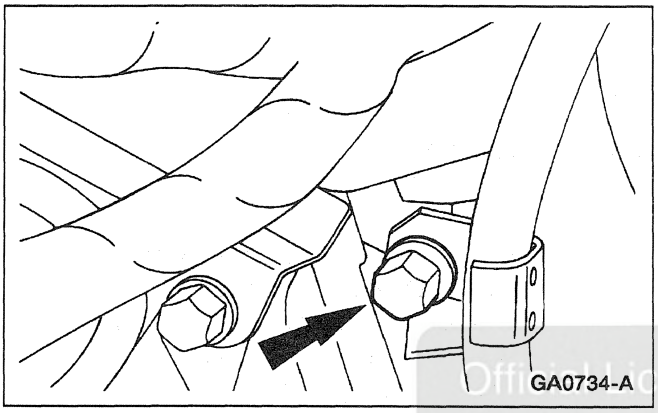

4. Install the fill tube bolt at the back of the RH cylinder head (6049).

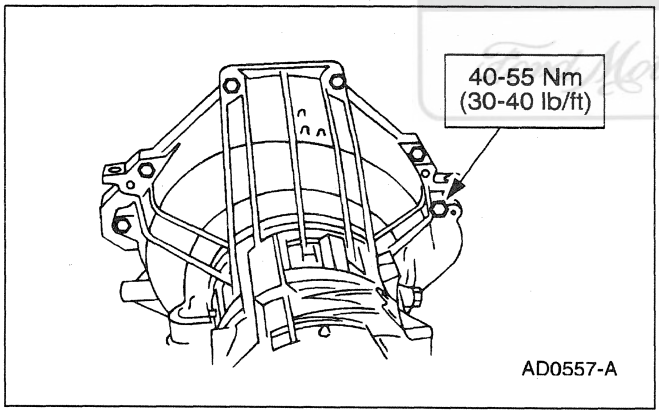

5. Install the bolts.

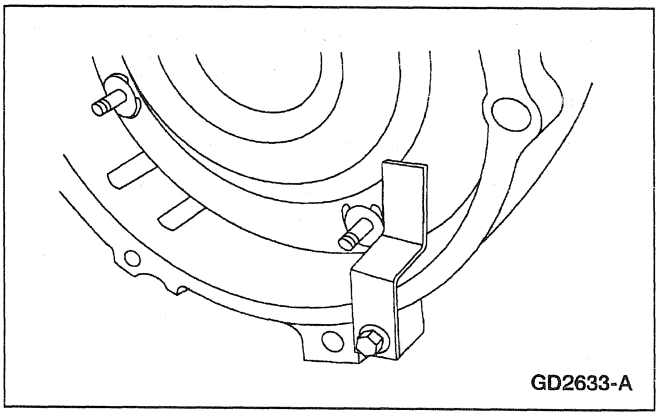

6. Remove the Torque Converter Holding Tool.

Official Licensed Product Ford Motor Company

INSTALLATION (Continued)

7. Install the dual converter Y pipe; refer to Section 309-00.

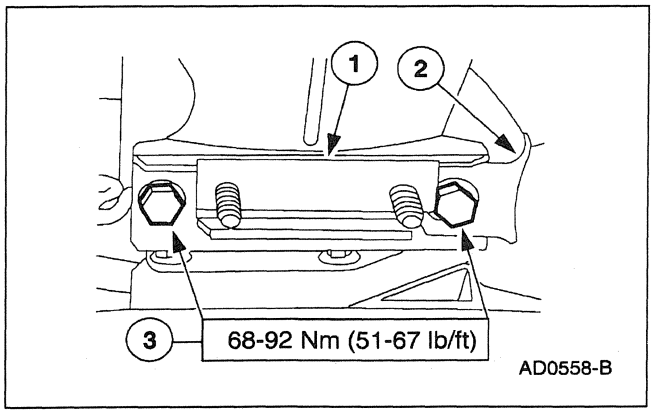

8. Install the transmission mount.
   1 Position the transmission mount.
   2 Position the exhaust pipe bracket.
   3 Install the two transmission mount bolts.

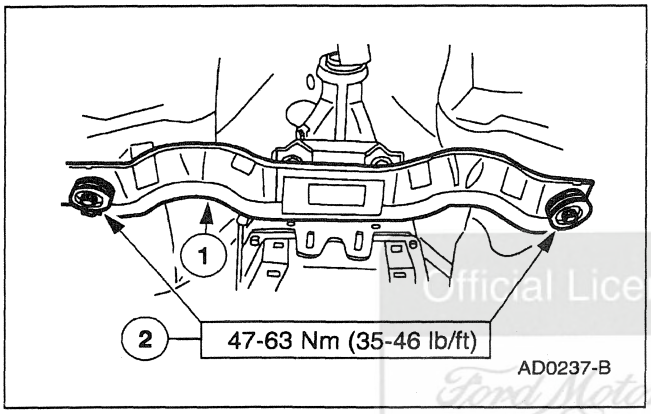

9. Install the rear crossmember.
   1 Position the crossmember.
   2 Install the two crossmember bolts.

Official Licensed Product
Ford Motor Company

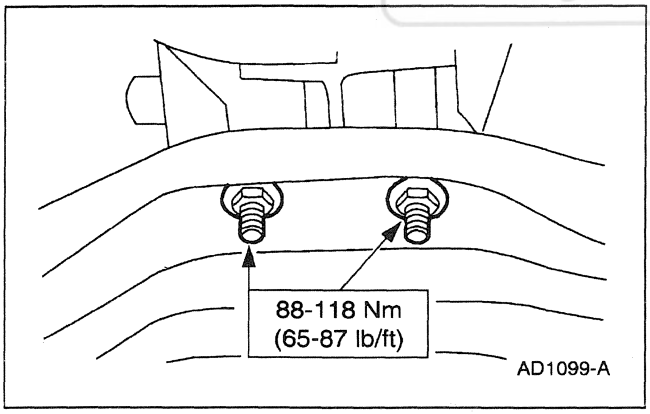

10. Install the two transmission mount nuts.

11. Remove Hi-Lift Jack.

INSTALLATION (Continued)

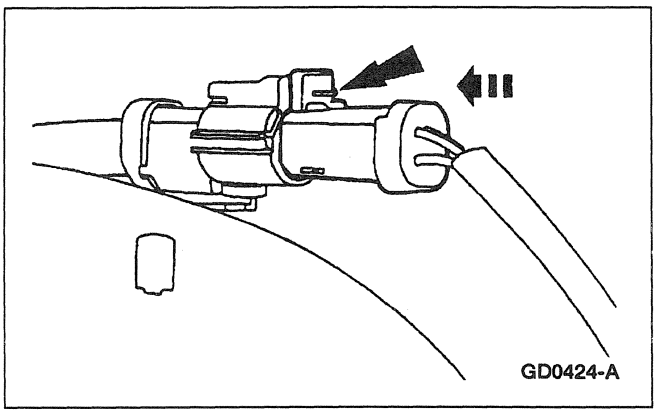

12. Connect the heated oxygen (HO2S) sensor electrical connectors.

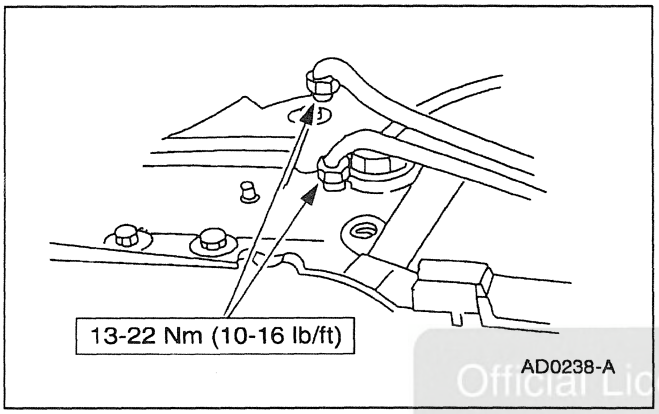

13. Connect the transmission fluid cooler tubes.

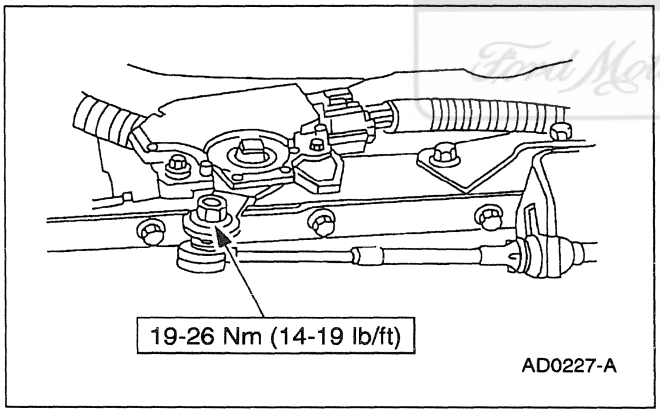

Official Licensed Product
Ford Motor Company

14. **NOTE:** The manual lever must be in the Overdrive position.

    Slide the transmission shift linkage into the cable bracket until the tabs fully seat and connect the shift cable at the manual lever.

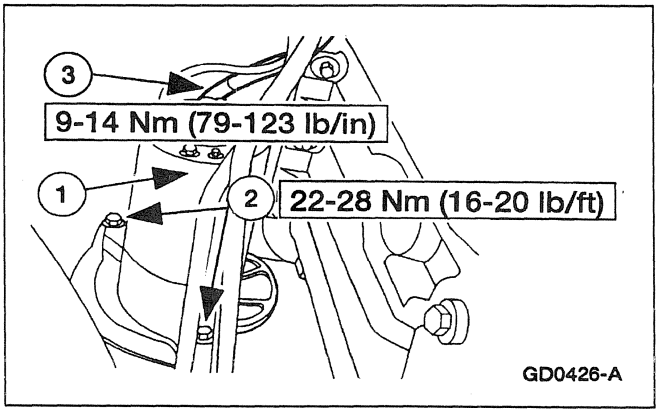

15. Install the starter.
    1 Position the starter.
    2 Install the bolts.
    3 Connect the wires.

INSTALLATION (Continued)

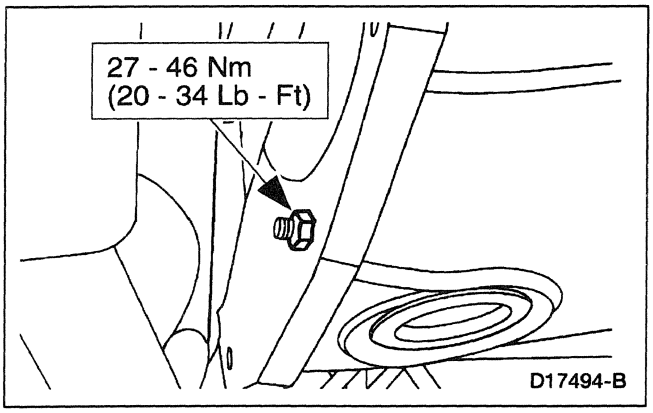

16. Install the four nuts retaining the torque converter.
    - Rotate the crankshaft to access all the nuts.

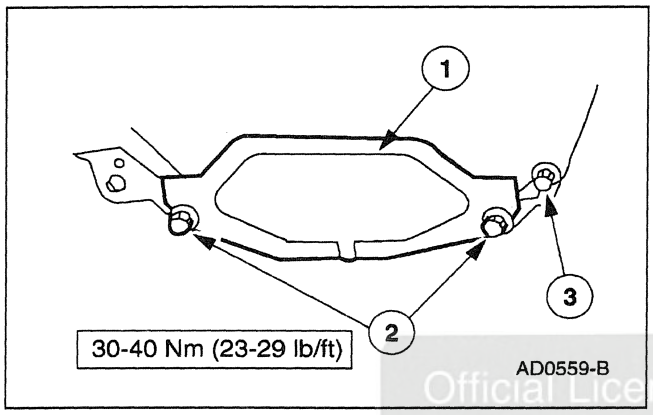

17. Install the transmission inspection cover.
    1 Position the transmission inspection cover.
    2 Install the two bolts.
    3 Install bolt for separator plate.

Official Licensed Product
Ford Motor Company

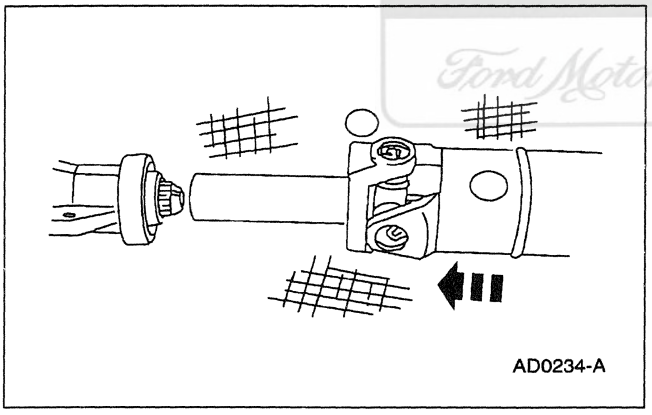

18. Install the driveshaft.
    - Position the driveshaft on the transmission.
    - Install the rear differential nuts and bolts.
    - Position the driveshaft to the rear differential.
    - Install the driveshaft bolts.

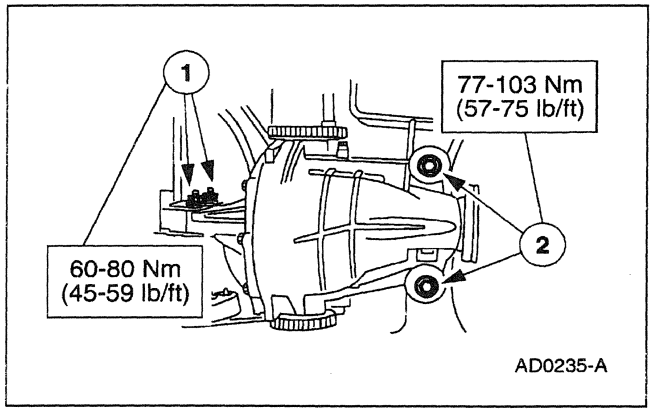

INSTALLATION (Continued)

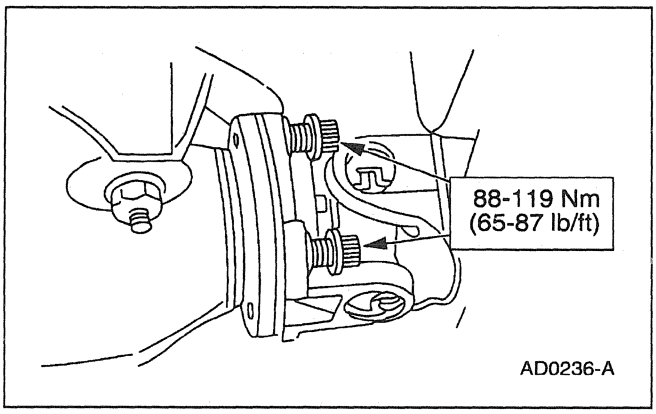

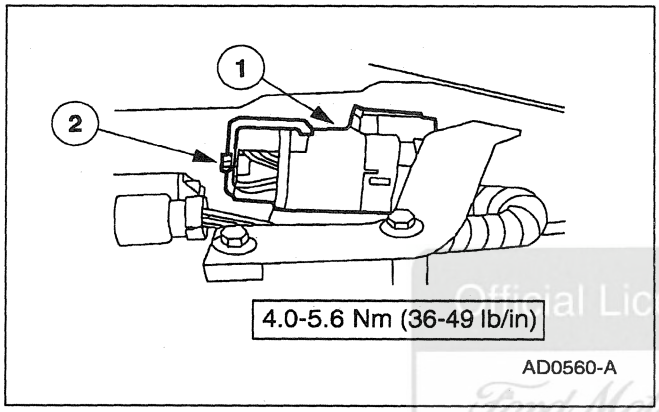

19. Lower the vehicle.

20. Connect the transmission harness electrical connector.
    1 Connect the electrical connector.
    2 Install the bolt.

Official Licensed Product
Ford Motor Company

21. Connect the battery ground cable (14301).

22. If equipped with air suspension, reactivate the system by turning on the air suspension switch.

23. Fill the transmission with fluid and inspect for proper operation.
    - Use Motorcraft synthetic MERCON V Automatic Transmission Fluid XT-5-QM or equivalent meeting MERCON V specification.

GENERAL PROCEDURES

Transmission Fluid Cooler — Backflush/Cleaning

1. Test your equipment to make sure that a vigorous fluid flow is present before proceeding. Replace the system filter if flow is weak or contaminated.

GENERAL PROCEDURES (Continued)

2. To aid in attaching the cleaner to the transmission steel cooler tubes, connect two additional rubber hoses to the transmission end of the steel transmission cooler tubes as follows:
   - Connect the cleaner tank pressure line to the steel transmission cooler return tube (longest tube).
   - Connect a tank return hose to the steel transmission cooler pressure tube (shorter tube). Place the outlet end of this hose in the solvent tank reservoir.
3. Turn on solvent pump and allow the solvent to circulate a minimum of 5 minutes (cycling switch on and off will help dislodge contaminants in cooler system).
4. Switch off the solvent pump and disconnect the solvent pressure hose from the transmission cooler return tube.
5. Use compressed air to blow out the cooler(s) and tubes (blow air into the transmission cooler return tube) until all solvent is removed.
6. Remove the rubber return hose from the remaining steel cooler tube.

Official Licensed Product
Ford Motor Company

SPECIFICATIONS

General Specifications

Item		Specification		
Automatic Transmission				
Refill Capacity Liters (Quarts)		13.2 (13.9) MERCON V Automatic Transmission Fluid XT-2-QM meeting MERCON V specification		
Torque Converter				
Stall Speed				
	Engine		Min	Max
	4.6L		2336	2718
End Play				
New or Rebuilt mm (inch)		0.355-1.04 (0.014-0.041)		
Used mm (inch)		0.355-1.87 (0.014-0.074)		

(Continued)

General Specifications

Item	Specification	
Forward Clutch Pack		
Clearance mm (inch)	1.27-2.38 (0.050-0.094)	
Snap Ring Thickness mm (inch)	1.524-1.625 (0.060-0.064) 1.880-1.981 (0.074-0.078) 2.235-2.337 (0.088-0.092) 2.591-2.692 (0.102-0.106)	
Reverse Clutch Pack		
Clearance mm (inch)	1.01-1.524 (0.040-0.060)	

(Continued)

SPECIFICATIONS (Continued)

General Specifications

Item	Specification
Snap Ring Thickness mm (inch)	1.524-1.625 (0.060-0.064) 1.880-1.981 (0.074-0.078) 2.235-2.337 (0.088-0.092) 2.591-2.692 (0.102-0.106)
Direct Clutch Pack	
Clearance mm (inch)	1.5748-21.59 (0.062-0.85)
Snap Ring Thickness mm(inch)	1.270-1.372 (0.050-0.054) 1.625-1.727 (0.064-0.068) 1.981-2.083 (0.078-0.082) 2.337-2.438 (0.092-0.096)
Intermediate Clutch Pack	
Clearance mm (inch)	41.7322-42.5958 (1.643-1.677)
Snap Ring Thickness mm (inch)	1.702-1.803 (0.067-0.071) 1.956-2.057 (0.077-0.081) 2.210-2.311 (0.087-0.091) 2.464-2.565 (0.097-0.101)
Selective Thrust Washer - No. 1	
Green Thickness mm (inch)	1.217-1.371 (0.050-0.054)
Yellow Thickness mm (inch)	1.727-1.828 (0.068-0.072)
Natural Thickness mm (inch)	2.159-2.260 (0.085-0.089)
Red Thickness mm (inch)	2.590-2.692 (0.102-0.106)
Blue Thickness mm (inch)	3.022-3.124 (0.119-0.123)

Torque Specifications

Description	Nm	Lb/Ft	Lb/In
Rear Transmission Crossmember Bolts	47-63	35-46	—
Transmission Mount Nuts	88-118	65-87	—
Transmission Mount Bolts	68-92	51-67	—
Extension Housing Bolts	25-30	19-22	—
Transmission Fluid Pan Bolts	12-15	9-11	—
Front Pump Bolts	20-26	15-19	—
Front Pump Support Bolts	20-26	15-19	—
Harness Electrical Connector Bolt	4-5.6	—	36-49

(Continued)

Torque Specifications

Description	Nm	Lb/Ft	Lb/In
Inspection Cover Bolts	30-40	23-29	—
Main Control Valve Body Bolts	9-11	—	80-97
Main Control Valve Body Cover Plate Bolts	9-11	—	80-97
Main Control Valve Body Separator Plate Bolts	9-11	—	80-97
Manual Lever Shaft Inner Nut	26-37	20-27	—
Manual Lever Shaft Outer Nut	30-35	23-25	—
Fluid Cooler Line Case Fittings	20-26	15-19	—
Pressure Tap Plugs	8-16	—	71-141
Rear Driveshaft Bolts	88-119	65-87	—
Starter Bolts	22-28	17-20	—
TCC Solenoid Bolt	9-11	—	80-97
Torque Converter Drain Plug	28-30	21-22	—
Torque Converter Nuts	27-46	20-33	—
Digital Transmission Range (TR) Sensor Bolts	7-10	—	62-88
Transmission Bolts	40-55	30-40	—
Vehicle Speed Sensor (VSS) Bolt	7-10	—	62-88
Output Shaft Speed (OSS) Sensor Bolt	8-16	—	71-141
Starter B+ Cable	9-14	—	80-123
Exhaust Manifold Bolts	34-46	25-33	—
Exhaust Pipe Bolts	34-46	25-33	—
Transmission Vent Tube	8-16	—	71-141
Manual Control Valve Detent Lever Spring Bolt	9-11	—	62-97
Cooler Tube Nut to Case Fitting	13-22	10-16	—
Rear Differential Retaining Nuts (Front)	77-103	57-75	—
Rear Differential Retaining Bolts and Nuts (Rear)	60-80	45-59	—
Transmission Linkage	19-26	14-19	—

Ford Motor Company

SPECIFICATIONS (Continued)

Reference: Band/Clutch Application Chart 601

Gear	Overdrive Band	Reverse Band	Forward Clutch	Direct Clutch	Interm Friction Clutch	Reverse Clutch	Interm One-Way Clutch	Planetary One-Way Clutch
1st Gear Manual Low		Applied	Applied					Holding
2nd Gear Manual Low	Applied		Applied		Applied		Holding	
1st Gear — D (Overdrive)			Applied					Holding
2nd Gear — D (Overdrive)			Applied		Applied		Holding	
3rd Gear — D (Overdrive)			Applied	Applied	Applied			
4th Gear — D (Overdrive)	Applied			Applied	Applied			
Reverse (R)		Applied				Applied		

Official Licensed Product
Ford Motor Company

SECTION 307-02 Transaxle/Transmission Cooling

VEHICLE APPLICATION: Mark VIII

SUBJECT	PAGE
DESCRIPTION AND OPERATION	
Transmission Cooling	307-02-2
DIAGNOSIS AND TESTING	
Transmission Cooling	307-02-3
Inspection and Verification	307-02-3
Symptom Chart	307-02-3
GENERAL PROCEDURES	
Transmission Fluid Cooler — Backflushing/Cleaning	307-02-3
Transmission Fluid Cooler Flow Test	307-02-3
SPECIFICATIONS	307-02-3

Official Licensed Product
Ford Motor Company

DESCRIPTION AND OPERATION

Transmission Cooling

The transmission cooling system consists of a transmission cooler that is integral to the radiator (8005) and two steel fluid cooler tubes. The tubes are not available and must be fabricated from bulk material.

Component Location

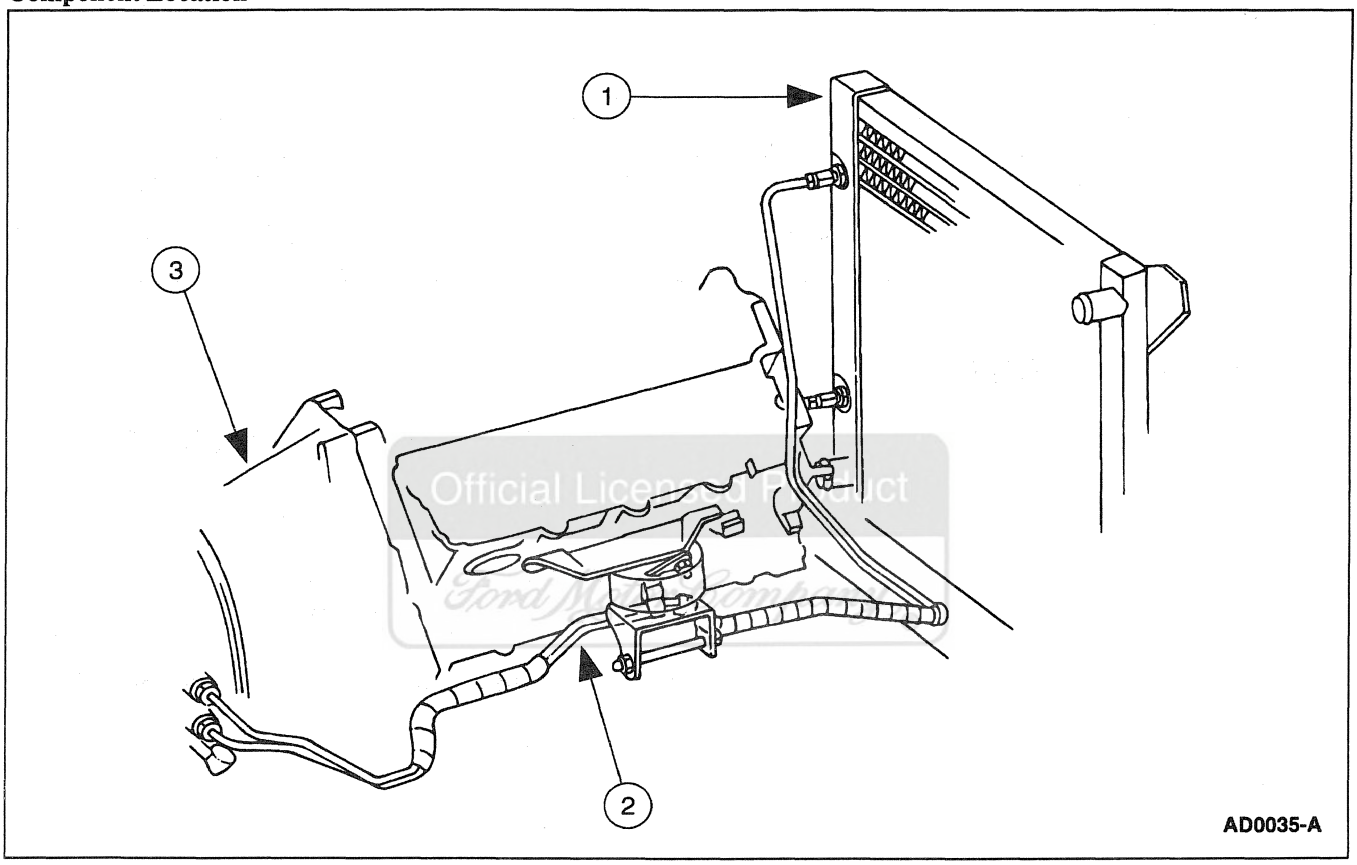

Item	Part Number	Description
1	8005	Radiator
2	7A301	Fluid Cooler Tubes
3	7000	Transmission Assy

DIAGNOSIS AND TESTING

Transmission Cooling

Inspection and Verification

1. When transmission fluid is found in the engine coolant or engine coolant is found in the transmission, replace the radiator (8005); refer to Section 303-03.
2. Inspect the cooler tubes and fittings for damage and leaks. Tighten the fittings to specification. If a leak persists, replace the fittings or tubes as necessary.
3. If the transmission has been disassembled to replace worn or damaged parts, or if fluid contamination is suspected, flush the transmission cooling system; refer to Section 307-01.

Symptom Chart

SYMPTOM CHART

Condition	Possible Source	Action
• Transmission Overheating	• Clogged radiator. • System leaks.	• INSPECT for clogging. SERVICE as required. • INSPECT for leaks. SERVICE as required.

GENERAL PROCEDURES

Official Licensed Product
Ford Motor Company

Transmission Fluid Cooler Flow Test

Refer to Diagnosis and Testing, Section 307-01.

Transmission Fluid Cooler — Backflushing/Cleaning

Refer to Transmission, Removal in Section 307-01.

SPECIFICATIONS

General Specifications

Item	Specification
Mercon® Multi-Purpose Automatic Transmission Fluid XT-2-QDX	Ford MERCON® Specification

Torque Specifications

Description	Nm	Lb/Ft
Fluid Cooler Tube Connector	29-35	21-25
Fluid Cooler Tube Nut	24-31	18-22

SECTION 307-05 Automatic Transaxle/Transmission External Controls

VEHICLE APPLICATION: Mark VIII

SUBJECT	PAGE
DESCRIPTION AND OPERATION	
External Controls	307-05-2
DIAGNOSIS AND TESTING	
External Controls	307-05-2
Inspection and Verification	307-05-3
Pinpoint Tests	307-05-10
Symptom Chart	307-05-9
REMOVAL AND INSTALLATION	
Bezel	307-05-34
Bulb	307-05-35
Cable and Bracket	307-05-30
Knob	307-05-37
Selector Lever	307-05-32
GENERAL PROCEDURES	
Cable Adjustment	307-05-38
SPECIFICATIONS	307-05-39

Official Licensed Product
Ford Motor Company

DESCRIPTION AND OPERATION

External Controls

The transmission shift cable transfers the transmission operating mode from the gearshift lever (7210) to the automatic transmission. The indicated position of the transmission control selector lever is transferred to the transmission through the steering column shift selector tube, then to the cable, and down to the manual control lever on the transmission.

Shift Interlock System

The shift interlock system prevents the shifting from PARK unless the brake pedal (2455) is depressed. The shift interlock system consists of a shift lock actuator mounted at the base of the steering column (3C529) . If the ignition switch (11572) is in the RUN position, the shift lock actuator is continually on unless the brake pedal is depressed.

Transmission Control Switch (TCS)

The transmission control switch (TCS) is a momentary contact switch that is located on the end of the transmission control selector lever. Pushing the TCS will either disengage or engage the overdrive function of the transmission. If the OVERDRIVE is disengaged, the word OFF will illuminate on the transmission control selector lever.

DIAGNOSIS AND TESTING

External Controls

Refer to Electrical and Vacuum Troubleshooting Manual, Cell 29, Transmission Controls (4R70W) for schematic and connector information.

Refer to Electrical and Vacuum Troubleshooting Manual, Cell 37, Shift Lock for schematic and connector information.

Refer to Electrical and Vacuum Troubleshooting Manual, Cell 58, Lighting Control Module for schematic and connector information.

Refer to Electrical and Vacuum Troubleshooting Manual, Cell 65, Warning Indicators for schematic and connector information.

Official Licensed Ford Motor Company

DIAGNOSIS AND TESTING (Continued)

Refer to Electrical and Vacuum Troubleshooting Manual, Cell 90, Turn/Stop Hazard Lamp for schematic and connector information.

Special Tool(s)

ST1137-A	73 Digital Multimeter 105-R0051 or equivalent
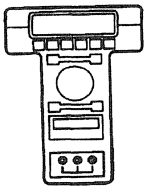 ST1217-A	New Generation Star (NGS) Tester 418-F048 (007-00500) or equivalent
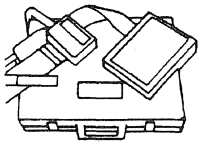 ST1391-A	Rotunda EEC-V 104-PIN Breakout Box 418-049 (014-00950) or equivalent

Inspection and Verification

1. Verify the customer's concern by operating the brake shift interlock or the transmission control switch to duplicate the condition.
2. Inspect to determine if one of the following apply:

Visual Inspection Chart

Mechanical	Electrical
• Damaged or misadjusted shift cable and bracket • Damaged transmission range selector lever • Damaged ignition/shifter interlock cable	• Damaged power distribution box Fuse 12 (15A) or Fuse junction panel Fuse 28 (10A) • Damaged stoplight switch • Damaged shift lock actuator • Circuity open/shorted

3. If the inspection reveals an obvious concern(s) that can be readily identified, service as required.
4. If the concern remains after the inspection, connect the Rotunda New Generation Star (NGS) Tester to the data link connector (DLC) located beneath the instrument panel and select the vehicle to be tested from the NGS menu. If the NGS does not communicate with the vehicle:
   - check that the program card is properly installed.
   - check the connections to the vehicle.
   - check the ignition switch position.

   If the NGS still does not communicate with the vehicle; refer to the New Generation Star Tester manual.
5. Perform the DATA LINK DIAGNOSTIC TEST using the NGS. If the NGS responds with:
   - CKT 914 and CKT 915 = ALL MODULES NO RESPONSE/NOT EQUIPPED, go to Communication System Diagnostics in Section 418-00 to diagnose network concern.
   - NO RESPONSE/NOT EQUIPPED for the steering column/ignition/lighting control module (SCIL), go to Pinpoint Test A.
   - NO RESPONSE/NOT EQUIPPED for the message center module (MCM), go to Pinpoint Test B.
   - SYSTEM PASSED for the steering column/ignition/lighting control module (SCIL), retrieve and record the continuous diagnostic trouble codes (DTCs), erase the continuous DTCs, then execute Self Test Diagnostics for the steering column/ignition/lighting control module (SCIL).
   - SYSTEM PASSED for the message center module (MCM), retrieve and record the continuous diagnostic trouble codes (DTCs), erase the continuous DTCs, then execute Self Test Diagnostics for the message center module (MCM).

Official Licensed Product
Ford Motor Company

DIAGNOSIS AND TESTING (Continued)

6. If the SCIL DTCs retrieved are related to the concern, go to the Steering Column/Ignition/Lighting Control Module (SCIL) Diagnostic Trouble Code (DTC) Index to continue diagnostics.

   If the message center module DTCs retrieved are related to the concern, go to the Message Center Module (MCM) Diagnostic Trouble Code (DTC) Index to continue diagnostics.

7. If no DTCs related to the concern are retrieved, go to the Symptom Chart to continue diagnostics.

Steering Column/Ignition/Lighting Control (SCIL) Module Diagnostic Trouble Code (DTC) Index

DTC	Description	DTC Caused By	Action to Take
C1446	BRAKE SWITCH CIRCUIT FAILURE	SCIL	GO to Section 206-05.
B1246	PANEL DIM POTENTIOMETER SWITCH CIRCUIT FAILURE	SCIL	GO to Section 417-02.
B1312	LAMP HEADLAMP INPUT CIRCUIT SHORT TO BATTERY	SCIL	GO to Section 417-01.
B1334	LUGGAGE COMPARTMENT DOOR AJAR CIRCUIT SHORT TO GROUND	SCIL	GO to Section 417-02.
B1342	ECU DEFECTIVE	SCIL	GO to Section 417-01.
B1353	IGNITION KEY-IN CIRCUIT OPEN	SCIL	GO to Section 501-12.
B1360	IGNITION RUN/ACC CIRCUIT OPEN	SCIL	GO to Section 501-12.
B1364	IGNITION START CIRCUIT OPEN	SCIL	GO to Section 501-12.
B1446	WIPER PARK SENSE CIRCUIT FAILURE	SCIL	GO to Section 417-01.
B1485	BRAKE PEDAL INPUT SHORT TO B+	SCIL	GO to Section 417-01.
B1509	FLASH-TO-PASS SWITCH CIRCUIT SHORT TO BATTERY	SCIL	GO to Section 417-01.
B1522	HOOD SWITCH CIRCUIT SHORT TO GROUND	SCIL	GO to Section 419-01A.
B1562	DOOR LOCK CYLINDER CIRCUIT SHORT TO GROUND	SCIL	GO to Section 419-01A.
B1566	DOOR AJAR CIRCUIT SHORT TO GROUND	SCIL	GO to Section 417-02.
B1600	PATS IGNITION KEY TRANSPONDER SIGNAL IS NOT RECEIVED	SCIL	GO to Section 419-01B.
B1601	PATS RECEIVED INCORRECT KEY CODE FROM IGNITION KEY TRANSPONDER	SCIL	GO to Section 419-01B.
B1676	BATTERY VOLTAGE OUT OF RANGE	SCIL	GO to Section 417-01.
B1682	PATS IS DISABLED (CHECK LINK BETWEEN PATS AND TRANSPONDER)	SCIL	GO to Section 419-01B.
B1687	LAMP DOME INPUT CIRCUIT SHORT TO BATTERY	SCIL	GO to Section 417-02.
B1689	AUTOLAMP DELAY CIRCUIT FAILURE	SCIL	GO to Section 417-01.
B1796	LAMP HEADLAMP LOW BEAM CIRCUIT SHORT TO BATTERY	SCIL	GO to Section 417-01.

(Continued)

DIAGNOSIS AND TESTING (Continued)

Steering Column/Ignition/Lighting Control (SCIL) Module Diagnostic Trouble Code (DTC) Index

DTC	Description	DTC Caused By	Action to Take
B1875	TURN SIGNAL/HAZARD SWITCH SIGNAL CIRCUIT FAILURE	SCIL	GO to Section 417-01.
B1980	BULB OUTAGE CONDITION DETECTED	SCIL	GO to Section 417-01.
B2328	STEERING COLUMN REACH FEEDBACK POTENTIOMETER CIRCUIT FAILURE	SCIL	GO to Section 211-05.
B2332	STEERING COLUMN TILT FEEDBACK POTENTIOMETER CIRCUIT FAILURE	SCIL	GO to Section 211-05.
B2351	STEERING COLUMN SWITCH SIGNAL CIRCUIT FAILURE	SCIL	GO to Section 211-05.
U1027	SCP INVALID OR MISSING DATA FOR ENGINE RPM	PCM	REFER to the Powertrain Control/Emissions Diagnosis Manual [1].
U1041	SCP INVALID OR MISSING DATA FOR VEHICLE SPEED	ABS	GO to Section 206-09, Inspection and Verification to continue diagnosis.
U1057	SCP INVALID OR MISSING DATA FOR VEHICLE CONFIGURATION	SCIL	GO to Section 417-01, Inspection and Verification to continue diagnosis.
U1059	SCP INVALID OR MISSING DATA FOR TRANSMISSION/ TRANSAXLE/PRNDL	PCM	REFER to the Powertrain Control/Emissions Diagnosis Manual [1].
U1123	SCP INVALID OR MISSING DATA FOR ODOMETER	ABS	GO to Section 206-09, Inspection and Verification to continue diagnosis.
U1147	SCP INVALID OR MISSING DATA FOR VEHICLE SECURITY	PCM	PERFORM J1850 Communication Network diagnostics. GO to Communication Network Diagnostics in Section 418-00.
U1180	SCP INVALID OR MISSING DATA FOR PERSONALIZATION (MEMORY) FEATURES	DDM	GO to Section 501-09, Inspection and Verification to continue diagnosis.
U1181	SCP INVALID OR MISSING DATA FOR PERSONALIZATION (MEMORY) FEATURES	DDM	GO to Section 501-09, Inspection and Verification to continue diagnosis.
U1197	SCP INVALID OR MISSING DATA FOR DOOR LOCKS	DDM	GO to Section 501-14B, Inspection and Verification to continue diagnosis.
U1198	SCP INVALID OR MISSING DATA FOR EXTERNAL ACCESS (DOORS)	DDM	GO to Section 501-14B, Inspection and Verification to continue diagnosis.
U1199	SCP INVALID OR MISSING DATA FOR EXTERNAL ACCESS (DOORS)	DDM	GO to Section 417-02, Inspection and Verification to continue diagnosis.
U1211	SCP INVALID OR MISSING DATA FOR RESTRAINTS	DSM	GO to Section 413-08, Inspection and Verification to continue diagnosis.
U1222	SCP INVALID OR MISSING DATA FOR INTERIOR LAMPS	DDM	GO to Section 501-14B, Inspection and Verification to continue diagnosis.

Steering Column/Ignition/Lighting Control (SCIL) Module Parameter Identification Index

Display	Description	PID Content
CCNTSCI	NUMBER OF CONTINUOUS DTCS ON SCIL	one count per bit
BOO__SCI	BRAKE SWITCH INPUT	ON OFF
PARK__BRK	PARKING BRAKE SWITCH INPUT	ON OFF

(Continued)

1 Can be purchased as a separate item.

DIAGNOSIS AND TESTING (Continued)

Steering Column/Ignition/Lighting Control (SCIL) Module Parameter Identification Index

Display	Description	PID Content
TILT	STEERING COLUMN TILT SWITCH	SHORT UP DOWN OFF
TELESCP	STEERING COLUMN TELESCOPE SWITCH	SHORT IN OUT OFF
TILTPOS	TILT POSITION SENSOR	SENSED notSEN
TELEPOS	TELESCOPE POSITION SENSOR	SENSED notSEN
TURN__SW	LEFT AND RIGHT TURN SIGNAL SWITCH	OFF LEFT RIGHT SHORT
LBEAMSW	LOW BEAM SWITCH	ON OFF
HBEAMSW	HIGH BEAM SWITCH	ON OFF
PARK__SW	PARKING SW	ON OFF
LIGHTSN	AMBIENT LIGHT	DAY NIGHT
FLASH	FLASH TO PASS SWITCH	ON OFF
FTURN__L	LEFT AND RIGHT FRONT TURN LAMP	R__OPEN, L__OPEN, L/R__OPEN OK
RTURN__L	LEFT AND RIGHT REAR TURN LAMP	R__OPEN, L__OPEN, L/R__OPEN OK
TAILLMP	LEFT AND RIGHT TAIL LAMP	OPEN OK
LOWBEAM	LOW BEAM LAMP	R__OPEN, L__OPEN, L/R__OPEN OK
AUTOLMP	AUTOLAMP SWITCH	ON OFF
ALP__IMP	AUTOLAMP ANALOG INPUT	100/255
DOMESW	DOME LAMP SWITCH	ACTIVE notACT
PANLDIM	PANEL DIM INTENSITY SWITCH	0-100%
HOOD__SW	HOOD AJAR SWITCH	AJAR CLOSED
DECKLID	DECKLID AJAR SWITCH	AJAR CLOSED
P__DR__SW	RIGHT FRONT DOOR AJAR SWITCH	AJAR CLOSED
IGN__KEY	IGNITION KEY IN/OUT	IN OUT
IGN__SCI	IGNITION SWITCH	START RUN OFF ACCSSY
WPPRKSW	WINDSHIELD WIPER PARK SENSE	not PRK PARKED
NUMKEYS	NUMBER OF IGNITION KEY CODES SUPPORTED	BCD (valid range 0-16)
DRLKCYL	DOOR LOCK CYLINDER	ON OFF
ENABLE	PATS SYSTEM STATUS	ON, OFF
FAILSAF	PATS SYSTEM STATUS	ON, OFF

Official Licensed Ford Motor Company

Steering Column/Ignition/Lighting (SCIL) Control Module Active Command Index

Active Command	Display	Action
PID LATCH	PID LATCH	ON OFF
ONE TOUCH WINDOW DOWN AND ACCY DELAY	ACCY RLY	ON OFF
WARNING LAMPS AND CHIME	CHIME ANTI-THEFT AUTOLMP HIGHBEAM	ON OFF ON OFF ON OFF ON OFF

(Continued)

Steering Column/Ignition/Lighting (SCIL) Control Module Active Command Index

Active Command	Display	Action
INTERIOR COURTESY LAMPS	INT LAMPS MIRRORLMP	ON OFF ON OFF
DECKLID RELEASE	RELEASE	ON OFF

(Continued)

DIAGNOSIS AND TESTING (Continued)

Steering Column/Ignition/Lighting (SCIL) Control Module Active Command Index

Active Command	Display	Action
TURN SIGNAL AND MARKER LAMPS	LF TURN RF TURN LR TURN RR TURN PARKLAMPS	ON OFF ON OFF ON OFF ON OFF ON OFF
HEADLAMP CONTROL	LEFT LOW RIGHT LOW HIGH BEAM DRUN LAMP LF CORNER RF CORNER	ON OFF ON OFF ON OFF ON OFF ON OFF ON OFF
HORN CONTROL	HORN	ON OFF
BACKLIGHTING INTENSITY	INTENSITY	0%-100%
COURTESY LAMP INTENSITY	INTENSITY	0%-100%
DOOR AJAR SIGNAL	DOOR AJAR	ON OFF

(Continued)

Steering Column/Ignition/Lighting (SCIL) Control Module Active Command Index

Active Command	Display	Action
TRANSMIT SIGNAL COMMAND	TRANSMIT	ON OFF
BRAKE SYSTEM	BRK/SHIFT PARK BRK	ON OFF ON OFF
STEERING COLUMN CONTROL	TILT UP	ONE SECOND TIME OUT
	TILT DOWN	ONE SECOND TIME OUT
	TELSCP IN	ONE SECOND TIME OUT
	TELSCPOUT	ONE SECOND TIME OUT
KEYCODE ERASE TIME SET	MINUTES	8-63 MINUTES

Official Licensed Product
Ford Motor Company

Message Center (MC) Module Diagnostic Trouble Code (DTC) Index

DTC	Description	DTC Caused By	Action to Take
B1201	FUEL SENDER CIRCUIT FAILURE	MC	GO to Section 413-08.
B1204	FUEL SENDER CIRCUIT SHORT TO GROUND	MC	GO to Section 413-08.
B1205	EIC SWITCH-1 ASSEMBLY CIRCUIT FAILURE	MC	GO to Section 413-08.
B1208	EIC SWITCH-1 ASSEMBLY CIRCUIT CIRCUIT SHORT TO GROUND	MC	GO to Section 413-08.
B1209	EIC SWITCH-2 ASSEMBLY CIRCUIT CIRCUIT FAILURE	MC	GO to Section 413-08.
B1212	EIC SWITCH-2 ASSEMBLY CIRCUIT CIRCUIT SHORT TO GROUND	MC	GO to Section 413-08.
B1342	ECU DEFECTIVE	MC	GO to Section 413-08.
B1389	OIL TEMPERATURE SENSOR CIRCUIT FAILURE	MC	GO to Section 413-08.
B1390	OIL TEMPERATURE SENSOR CIRCUIT SHORT TO GROUND	MC	GO to Section 413-08.
B1676	BATTERY VOLTAGE OUT OF RANGE	MC	GO to Section 413-08.
U1027	SCP INVALID OR MISSING DATA FOR ENGINE RPM	PCM	GO to Section 413-08, Inspection and Verification to continue diagnosis.
U1043	SCP INVALID OR MISSING DATA FOR TRACTION CONTROL	ABS/TC	GO to Section 206-09, Inspection and Verification to continue diagnosis.

(Continued)

DIAGNOSIS AND TESTING (Continued)

Message Center (MC) Module Diagnostic Trouble Code (DTC) Index

DTC	Description	DTC Caused By	Action to Take
U1051	SCP INVALID OR MISSING DATA FOR BRAKES	ABS/TC	GO to Section 206-09, Inspection and Verification to continue diagnosis.
U1059	SCP INVALID OR MISSING DATA FOR TRANSMISSION/ TRANSAXLE/PRNDL	HEC or PCM	GO to Section 413-01, Inspection and Verification to continue diagnosis.
U1073	SCP INVALID OR MISSING DATA FOR ENGINE COOLANT	HEC	GO to Section 413-01, Inspection and Verification to continue diagnosis.
U1123	SCP INVALID OR MISSING DATA FOR ODOMETER	ABS/TC	GO to Section 206-09, Inspection and Verification to continue diagnosis.
U1135	SCP INVALID OR MISSING DATA FOR IGNITION SWITCH/STARTER	SCIL	GO to Section 501-12, Inspection and Verification to continue diagnosis.
U1136	SCP INVALID OR MISSING DATA FOR TELLTALES	PCM	REFER to the Powertrain Control/Emissions Diagnosis Manual [2].
U1180	SCP INVALID OR MISSING DATA FOR PERSONALIZATION (MEMORY) FEATURES	DDM	GO to Section 501-09, Inspection and Verification to continue diagnosis.
U1181	SCP INVALID OR MISSING DATA FOR PERSONALIZATION (MEMORY) FEATURES	DDM	GO to Section 501-09, Inspection and Verification to continue diagnosis.
U1199	SCP INVALID OR MISSING DATA FOR EXTERNAL ACCESS (DOORS)	SCIL	GO to Section 417-02, Inspection and Verification to continue diagnosis.
U1211	SCP INVALID OR MISSING DATA FOR RESTRAINTS	SCIL	GO to Section 413-08, Inspection and Verification to continue diagnosis.
U1217	SCP INVALID OR MISSING DATA FOR EXTERNAL LAMPS	SCIL	GO to Section 417-01, Inspection and Verification to continue diagnosis.
U1218	SCP INVALID OR MISSING DATA FOR EXTERNAL LAMPS	SCIL	GO to Section 417-01, Inspection and Verification to continue diagnosis.
U1222	SCP INVALID OR MISSING DATA FOR INTERIOR LAMPS	SCIL	GO to Section 417-02, Inspection and Verification to continue diagnosis.
U1430	SCP INVALID OR MISSING DATA FOR FUNCTION READ FUEL SYSTEM	PCM	REFER to the Powertrain Control/Emissions Diagnosis Manual [2].
U2013	COMPASS MODULE NOT RESPONDING	MC	GO to Section 419-11, Inspection and Verification to continue diagnosis.

Message Center (MC) Module Parameter Identification (PIDS) Index

Display	Description	Content
CCNT__MC	NUMBER OF CONTINUOUS DTCS ON MCM	one count per bit
EOT__MCM	ENGINE OIL TEMPERATURE	one deg per bit (-40 to 214 deg)
COOLANT	ENGINE COOLANT LEVEL	OK notOK
OIL__LVL	ENGINE OIL LEVEL	OK notOK
ASDISSW	AIR SUSPENSION INHIBIT SWITCH	ON OFF
FUELLVL	FUEL LEVEL STATUS	100/225
AS__TRIM	AIR SUSPENSION WARNING	ON OFF
		—,DRIVER SET, VEH SET, SYS CHECK, TIME/DT, COMPASS, OPN/SHVBAT,

(Continued)

2 Can be purchased as a separate item.

DIAGNOSIS AND TESTING (Continued)

Message Center (MC) Module Parameter Identification (PIDS) Index

Display	Description	Content
SWFEED1	SWITCH FEED ONE STATUS	SHORTGRD
SWFEED2	SWITCH FEED TWO STATUS	—, RESET, FUEL ECON, FUEL RNG, TRIP/ODO, OPN/SHVBAT, SHORTGND
WFLUID	WASHER FLUID LEVEL	LOW OK

Message Center (MC) Module Active Command Index

Active Command	Display	Action
MESSAGE CENTER CONTROL	MSGCENTER	ON OFF
WARNING LAMPS AND CHIME	SBLT LAMP	ON OFF

(Continued)

Message Center (MC) Module Active Command Index

Active Command	Display	Action
BRAKE SYSTEM	T/AOFFLMP	ON OFF
O/D INDICATOR CONTROL	O/DOFFLMP	ON OFF

Symptom Chart

SYMPTOM CHART

Condition	Possible Source	Action
• No Communication With The Steering Column/Ignition/Lighting Control Module	• The steering column/ignition/lighting control module. • The circuitry.	• GO to Pinpoint Test A.
• No Communication With Message Center Module	• The message center module. • The circuitry.	• GO to Pinpoint Test B.
• The Shift Interlock System Does Not Release/Lock Properly	• A damaged shift lock actuator. • A damaged stoplight switch. • The steering column/ignition/lighting control module. • The circuitry.	• GO to Pinpoint Test C.
• The Shift Control Is Out Of Proper Gear Relationship	• A damaged ignition/shifter interlock cable. • A loose retainer bracket. • The transmission range selector lever linkage misadjusted.	• GO to Pinpoint Test D.
• The Transmission Control Indicator Lamp Is Not Operating Properly	• A damaged transmission control switch. • The warning indicator panel or bulb. • The message center module. • A damaged powertrain control module. • The circuitry.	• GO to Pinpoint Test E.

Official Licensed Product Ford Motor Company

DIAGNOSIS AND TESTING (Continued)

Pinpoint Tests

PINPOINT TEST A: NO COMMUNICATION WITH THE STEERING COLUMN/IGNITION/LIGHTING (SCIL) CONTROL MODULE

TEST CONDITIONS	TEST DETAILS/RESULTS/ACTIONS
A1 CHECK CIRCUIT 875 (BK/LB) FOR AN OPEN	
1 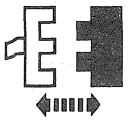 SCIL Connector C288 2 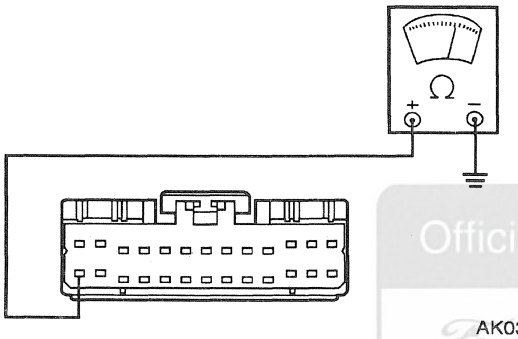 AK0313-B	2 Measure the resistance between the steering column/ignition/lighting control module connector Pin C288-14, Circuit 875 (BK/LB) and ground. • Is the resistance 5 ohms or less? → **Yes** GO to **A2**. → **No** SERVICE Circuit 875 (BK/LB) for an open. REPEAT the Data Link Diagnostic Test.
A2 CHECK CIRCUIT 57 (BK) FOR AN OPEN	
1 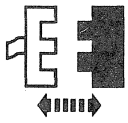 SCIL Connector C287 2 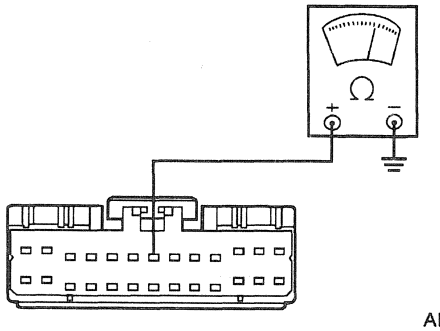 AK0314-B	2 Measure the resistance between the steering column/ignition/lighting control module connector Pin C287-7, Circuit 57 (BK) and ground. • Is the resistance 5 ohms or less? → **Yes** GO to **A3**. → **No** SERVICE Circuit 57 (BK) for an open. REPEAT the Data Link Diagnostic Test.

Official Licensed Product Ford Motor Company

(Continued)

DIAGNOSIS AND TESTING (Continued)

PINPOINT TEST A: NO COMMUNICATION WITH THE STEERING COLUMN/IGNITION/LIGHTING (SCIL) CONTROL MODULE (Continued)

TEST CONDITIONS	TEST DETAILS/RESULTS/ACTIONS
A3 CHECK FOR B+ SUPPLY ON THE STEERING COLUMN/IGNITION/LIGHTING CONTROL MODULE CONNECTOR C287	
[1] 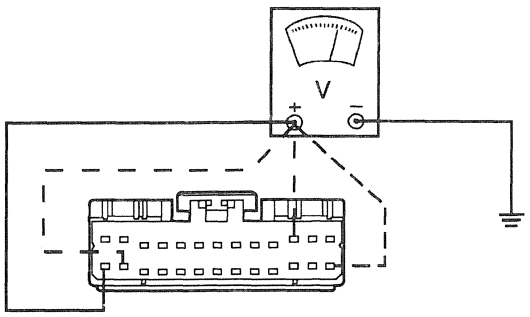 AK1260-A	[1] Measure the voltage at each of the following steering column/ignition/lighting control module connector C287 Pins. Note the voltage reading at each pin: — C287-14, Circuit 906 (R/O) — C287-26, Circuit 19 (LB/R) — C287-15, Circuit 1055 (W/LG) — C287-11, Circuit 1056 (DB/LG) • Is the voltage reading on any circuit B+? → **Yes** GO to the Communication Network Diagnostics in Section 418-00 to diagnose network concern. → **No** For each suspect circuit, REFER to the Electrical Vacuum Troubleshooting Manual, Cell 58, Lighting Control Module and Cell 11, Circuit Protection/Fuse Panel to identify the subsystem in need of service. SERVICE as required. GO to **A4**.

Official Licensed P
Ford Motor Company

(Continued)

DIAGNOSIS AND TESTING (Continued)

PINPOINT TEST A: NO COMMUNICATION WITH THE STEERING COLUMN/IGNITION/LIGHTING (SCIL) CONTROL MODULE (Continued)

TEST CONDITIONS	TEST DETAILS/RESULTS/ACTIONS
A4 CHECK FOR B+ SUPPLY ON STEERING COLUMN/IGNITION/LIGHTING CONTROL MODULE CONNECTOR C289	
1 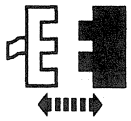 SCIL Connector C289 2 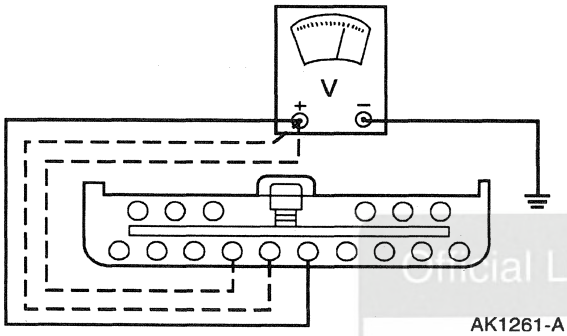 AK1261-A	2 Measure the voltage at each of the following steering column/ignition/lighting control module connector C289 Pins. Note the voltage reading at each pin: — C289-5, Circuit 1058 (BR/W) — C289-6, Circuit 1057 (O/BK) — C289-7, Circuit 908 (PK/LG) • Is the voltage reading on any circuit B+? → **Yes** GO to the Communication Network Diagnostics in Section 418-00 to diagnose network concern. → **No** For each suspect circuit, REFER to the Electrical Vacuum Troubleshooting Manual, Cell 58, Lighting Control Module and Cell 11, Circuit Protection/Fuse Panel to identify the subsystem in need of service. SERVICE as required. REPEAT the Data Link Diagnostic Test.

Official Licensed Product
Ford Motor Company

DIAGNOSIS AND TESTING (Continued)

PINPOINT TEST B: NO COMMUNICATION WITH MESSAGE CENTER MODULE

TEST CONDITIONS	TEST DETAILS/RESULTS/ACTIONS
B1 CHECK THE RADIO OPERATION	
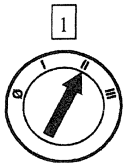	2 Operate the radio. • Does the radio operate? → **Yes** GO to **B2.** → **No** GO to Section 415-00, Inspection and Verification to diagnose the radio and the possible common power supply concern.
B2 CHECK CIRCUIT 1002 (BK/PK) FOR B+	
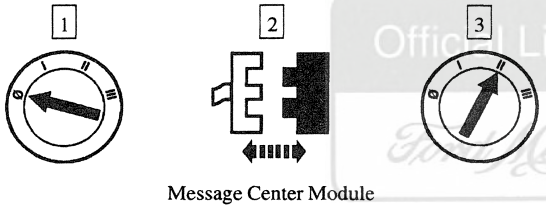 Message Center Module Connector C246 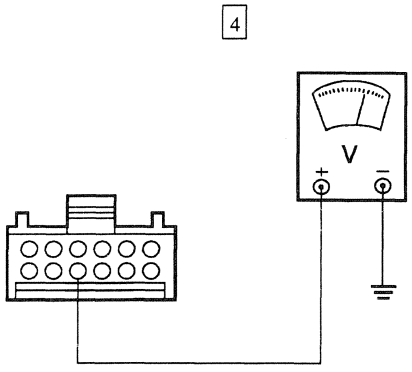 AK0997-B	4 Measure the voltage at the message center module connector Pin C246-10, Circuit 1002 (BK/PK). • Is the voltage B+? → **Yes** GO to **B3.** → **No** SERVICE Circuit 1002 (BK/PK) for an open. REPEAT the Data Link Diagnostic Test.

Official Licensed Product Ford Motor Company

(Continued)

DIAGNOSIS AND TESTING (Continued)

PINPOINT TEST B: NO COMMUNICATION WITH MESSAGE CENTER MODULE (Continued)

TEST CONDITIONS	TEST DETAILS/RESULTS/ACTIONS
B3 CHECK FOR COMMUNICATION TO THE HYBRID ELECTRONIC INSTRUMENT CLUSTER	
1 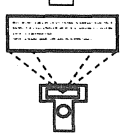 Data Link Diagnostic Test	• Was NO RESPONSE/NOT EQUIPPED retrieved for HEC? → **Yes** GO to Section 413-01, Inspection and Verification to diagnose the communication concern for hybrid electronic instrument cluster before continuing with the message center communication diagnosis. → **No** GO to **B4.**
B4 CHECK CIRCUIT 973 (R) FOR AN OPEN	
1 2 3 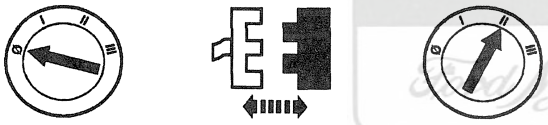 Message Center Module Connector C208 4 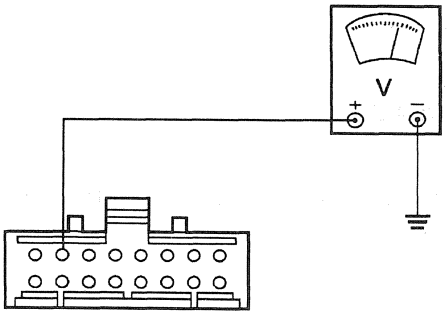 AK1000-A	4 Measure the voltage at the message center module connector Pin C208-27, Circuit 973 (R). • Is the voltage reading B+? → **Yes** GO to **B5.** → **No** SERVICE Circuit 973 (R) for an open. REPEAT Data Link Diagnostic Test.

Official Licensed Product Ford Motor Company

(Continued)

DIAGNOSIS AND TESTING (Continued)

PINPOINT TEST B: NO COMMUNICATION WITH MESSAGE CENTER MODULE (Continued)

TEST CONDITIONS	TEST DETAILS/RESULTS/ACTIONS
B5 CHECK CIRCUIT 875 (BK/LB) FOR AN OPEN	
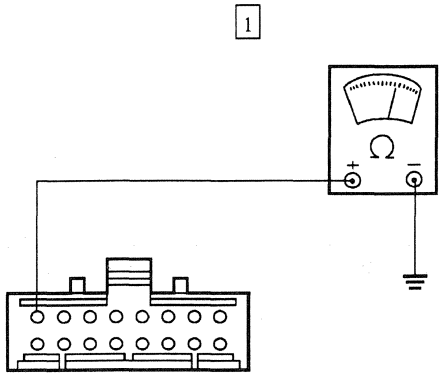 AK0999-A	1 Measure the resistance between the message center module connector Pin C208-28, Circuit 875 (BK/LB) and the ground. • Is the resistance 5 ohms or less? → **Yes** GO to **B6.** → **No** SERVICE Circuit 875 (BK/LB) for an open. REPEAT Data Link Diagnostic Test.
B6 CHECK CIRCUIT 57 (BK) FOR AN OPEN	
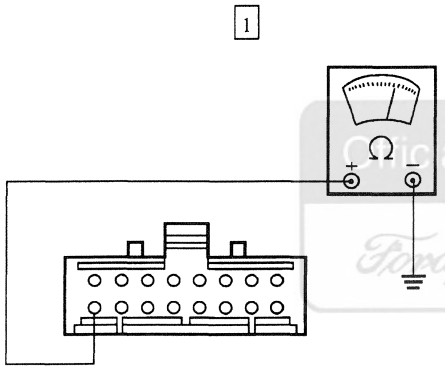 AK0998-A	1 Measure the resistance between the message center module connector Pin C208-36, Circuit 57 (BK) and the ground. • Is the resistance 5 ohms or less? → **Yes** GO to the Communication Network Diagnostics in Section 418-00 to diagnose the network concern. → **No** SERVICE Circuit 57 (BK) for an open. REPEAT Data Link Diagnostic Test.

Critical Licensed Product
Ford Motor Company

DIAGNOSIS AND TESTING (Continued)

PINPOINT TEST C: THE SHIFT INTERLOCK SYSTEM DOES NOT RELEASE/LOCK PROPERLY

TEST CONDITIONS	TEST DETAILS/RESULTS/ACTIONS
C1 CHECK THE BRAKE SHIFT INTERLOCK IN THE ACC POSITION	
1 2 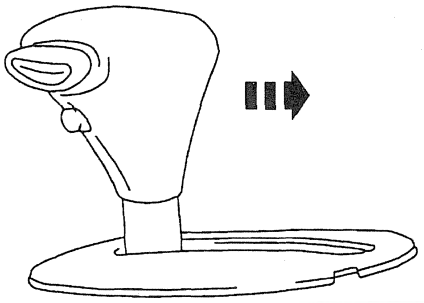 AD0219-A	2 With the brake pedal released, attempt to move the transmission range selector lever to REVERSE. • Did the transmission range selector lever move to REVERSE? → **Yes** GO to **C3.** → **No** GO to **C2.**
C2 CHECK FOR THE PROPER OPERATION	
1 2 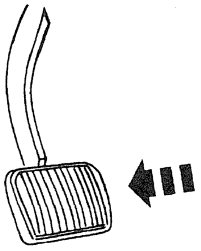 AD0220-A	2 Press the brake pedal.

Official Licensed Product
Ford Motor Company

(Continued)

DIAGNOSIS AND TESTING (Continued)

PINPOINT TEST C: THE SHIFT INTERLOCK SYSTEM DOES NOT RELEASE/LOCK PROPERLY (Continued)

TEST CONDITIONS	TEST DETAILS/RESULTS/ACTIONS
C2 CHECK FOR THE PROPER OPERATION (Continued)	
3 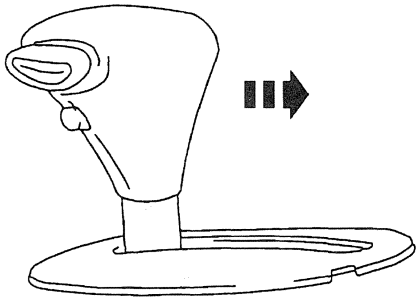 AD0219-A	3 Move the transmission range selector lever to REVERSE. • Did the transmission range selector lever move to REVERSE? → **Yes** The brake shift interlock system is operating properly. CHECK for intermittent or loose connections. CHECK the transmission range selector alignment and the adjustment. REFER to Cable Adjustment in this section. → **No** GO to **C9.**
C3 CHECK THE STEERING COLUMN ADJUSTMENT	
	1 Actuate the steering column adjustment switch to the tilt or the telescope position. • Does the steering column adjust? → **Yes** GO to **C4.** → **No** REFER to Section 211-05, Inspection and Verification to continue the diagnosis.

Official Licensed Product
Ford Motor Company

(Continued)

DIAGNOSIS AND TESTING (Continued)

PINPOINT TEST C: THE SHIFT INTERLOCK SYSTEM DOES NOT RELEASE/LOCK PROPERLY (Continued)

TEST CONDITIONS	TEST DETAILS/RESULTS/ACTIONS
C4 CHECK THE STOPLIGHT SWITCH OPERATION	
1 SCIL PID BOO__SCI 2 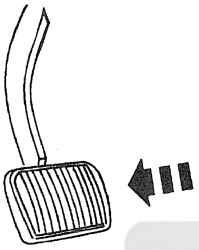 AD0220-A	2 Press down on the brake pedal while monitoring PID BOO __SCI. • Does the PID BOO__SCI change from OFF to ON when the brake pedal is pressed? → **Yes** GO to **C5.** → **No** REFER to Section 417-01, Inspection and Verification to continue the diagnosis.
C5 CHECK THE STEERING COLUMN/IGNITION/LIGHTING CONTROL MODULE OUTPUT	
1 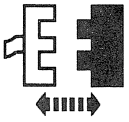 Brake Shift Interlock Solenoid Connector C360 2 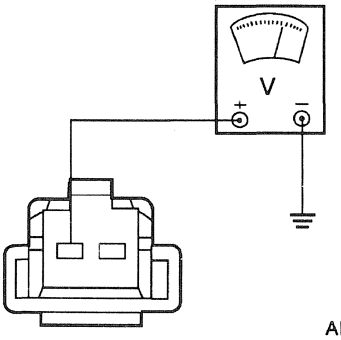 AD0207-A	2 Measure the voltage at the brake shift interlock connector C360, Circuit 22 (LB/BK).

Official Licensed Product Ford Motor Company

(Continued)

DIAGNOSIS AND TESTING (Continued)

PINPOINT TEST C: THE SHIFT INTERLOCK SYSTEM DOES NOT RELEASE/LOCK PROPERLY (Continued)

TEST CONDITIONS	TEST DETAILS/RESULTS/ACTIONS
C5 CHECK THE STEERING COLUMN/IGNITION/LIGHTING CONTROL MODULE OUTPUT (Continued)	
3 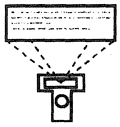 SCIL Control Module Active Command BRAKE SYSTEM 4 Trigger BRK/SHIFT On	• Is the voltage reading B+? → **Yes** GO to **C8.** → **No** GO to **C6.**
C6 CHECK CIRCUIT 22 (LB/BK) FOR A SHORT TO THE GROUND	
1 SCIL Connector C287 2 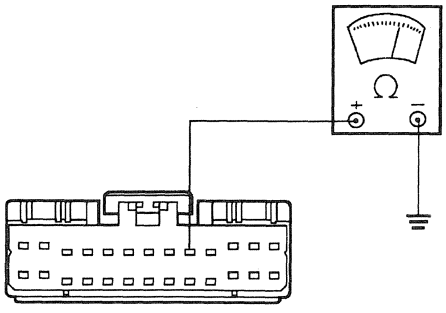 AD0208-A	2 Measure the resistance between the steering column/ignition/lighting control module connector Pin C287-9 and ground. • Is resistance reading 10 K ohms or less? → **Yes** SERVICE Circuit 22 (LB/BK) for a short to the ground. TEST the system for normal operation. → **No** GO to **C7.**

Official Licensed Product
Ford Motor Company

(Continued)

DIAGNOSIS AND TESTING (Continued)

PINPOINT TEST C: THE SHIFT INTERLOCK SYSTEM DOES NOT RELEASE/LOCK PROPERLY (Continued)

TEST CONDITIONS	TEST DETAILS/RESULTS/ACTIONS
C7 CHECK CIRCUIT 22 (LB/BK) FOR AN OPEN	
1 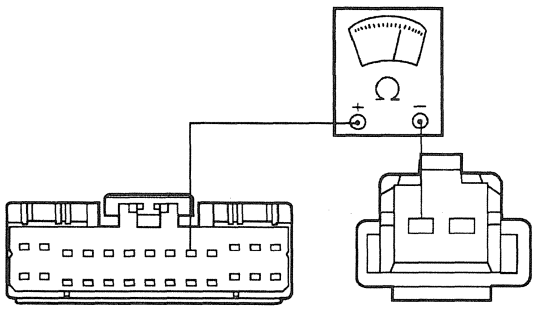 AD0209-A	1 Measure the resistance of Circuit 22 (LB/BK) between the steering column/ignition/lighting control module connector Pin C287-9 and the brake shift interlock solenoid connector C360. • Is the resistance 5 ohms or less? → **Yes** REPLACE the steering column/ignition/lighting control module. TEST the system for normal operation. → **No** SERVICE Circuit 22 (LB/BK) for an open. TEST the system for normal operation.
C8 CHECK CIRCUIT 57 (BK) FOR AN OPEN	
1 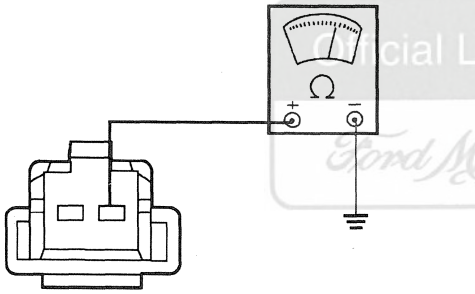 AD0210-A	1 Measure the resistance between the brake shift interlock solenoid connector C360, Circuit 57 (BK) and the ground. • Is the resistance 5 ohms or less? → **Yes** REPLACE the brake shift interlock solenoid. TEST the system for normal operation. → **No** SERVICE Circuit 57 (BK) for an open. TEST the system for normal operation.

Official Licensed Product
Ford Motor Company

(Continued)

DIAGNOSIS AND TESTING (Continued)

PINPOINT TEST C: THE SHIFT INTERLOCK SYSTEM DOES NOT RELEASE/LOCK PROPERLY (Continued)

TEST CONDITIONS	TEST DETAILS/RESULTS/ACTIONS
C9 CHECK CIRCUIT 22 (LB/BK) FOR POWER	
1 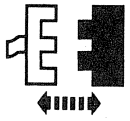 Brake Shift Interlock Solenoid Connector C360 2 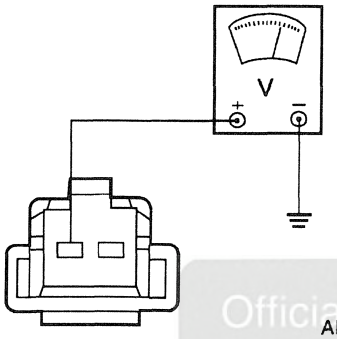 AD0207-A	2 Measure the voltage at the brake shift interlock solenoid connector C360, Circuit 22 (LB/BK). • Is the voltage reading B+? → **Yes** GO to **C10.** → **No** REPLACE the brake shift interlock solenoid. TEST the system for normal operation.
C10 CHECK STEERING COLUMN/IGNITION/LIGHTING CONTROL MODULE FOR SHORT TO B+	
1 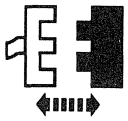 SCIL Connector C287 2 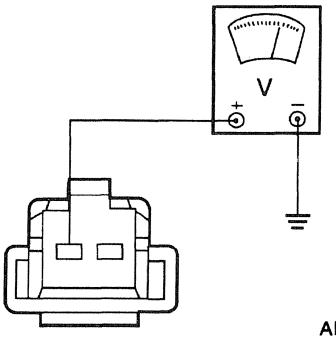 AD0207-A	2 Measure the voltage at the brake shift interlock solenoid connector C360, Circuit 22 (LB/BK). • Is voltage reading B+? → **Yes** SERVICE Circuit 22 (LB/BK) for a short to B+. TEST the system for normal operation. → **No** REPLACE the steering column/ignition/lighting control module. TEST the system for normal operation.

Official Licensed Product
Ford Motor Company

DIAGNOSIS AND TESTING (Continued)

PINPOINT TEST D: THE SHIFT CONTROL IS OUT OF PROPER GEAR RELATIONSHIP

TEST CONDITIONS	TEST DETAILS/RESULTS/ACTIONS
D1 CHECK THE SHIFT CONTROL LINKAGE	
	[1] Actuate the transmission range selector lever in all the ranges. Observe the linkage during operation. • Is the linkage damaged? → **Yes** REPLACE the transmission range selector lever linkage. TEST the system for normal operation. → **No** GO to **D2.**
D2 CHECK THE SHIFT CONTROL CABLE	
	[1] Check the transmission shift cable and bracket installation and tightness. • Is the transmission shift cable and bracket properly installed? → **Yes** ADJUST the linkage; refer to Cable Adjustment in this section. GO to **D3.** → **No** SERVICE as required. TEST the system for normal operation.
D3 CHECK THE LINKAGE/CABLE FOR THE PROPER GEAR RELATIONSHIP	
	[1] Actuate the transmission range selector lever in all ranges. • Does the indicator match the transmission range selector lever position? → **Yes** SERVICE is complete. TEST the system for normal operation. → **No** REPLACE the damaged linkage/cable. TEST the system for normal operation.

Official Licensed Product
Ford Motor Company

DIAGNOSIS AND TESTING (Continued)

PINPOINT TEST E: THE TRANSMISSION CONTROL INDICATOR LAMP IS NOT OPERATING PROPERLY

TEST CONDITIONS	TEST DETAILS/RESULTS/ACTIONS
E1 CHECK THE SAFETY BELT INDICATOR	
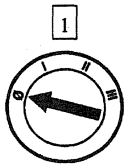	• Does the safety belt warning indicator illuminate? → **Yes** GO to **E2.** → **No** GO to Section 413-08, Inspection and Verification to diagnose the safety belt indicator and the possible shared power source concern.
E2 CHECK THE CONSOLE PRNDL INDICATOR	
	• Does the console PRNDL illuminate the gear position? → **Yes** GO to **E3.** → **No** GO to Section 413-01, Inspection and Verification to diagnose the console PRNDL and the possible shared power source concern.

Official Licensed Product
Ford Motor Company

(Continued)

DIAGNOSIS AND TESTING (Continued)

PINPOINT TEST E: THE TRANSMISSION CONTROL INDICATOR LAMP IS NOT OPERATING PROPERLY (Continued)

TEST CONDITIONS	TEST DETAILS/RESULTS/ACTIONS
E3 CHECK THE PID O/D__SW	
1 2 Powertrain Control Module PID O/D__SW 3 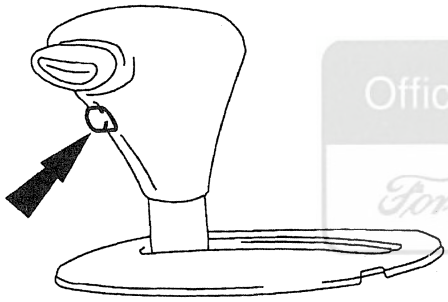 AD0218-A	1 **NOTE:** Refer to Section 418-00 for proper procedures on accessing the powertrain control module PIDs. 3 Press the transmission control switch several times while monitoring the PID O/D__SW. • Does the PID O/D__SW change from OFF to ON? → **Yes** GO to **E8.** → **No** GO to **E4.**

Official Licensed Product
Ford Motor Company

(Continued)

DIAGNOSIS AND TESTING (Continued)

PINPOINT TEST E: THE TRANSMISSION CONTROL INDICATOR LAMP IS NOT OPERATING PROPERLY (Continued)

TEST CONDITIONS	TEST DETAILS/RESULTS/ACTIONS
E4 CHECK CIRCUIT 298 (P/O) FOR B+	
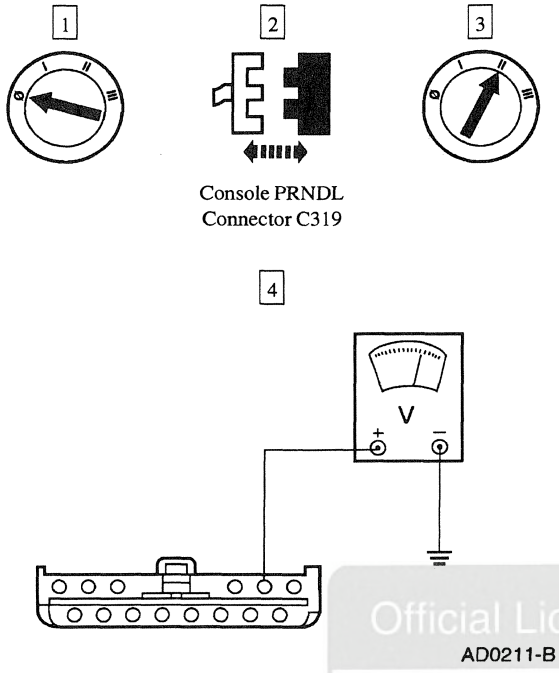	4 Measure the voltage at the console PRNDL connector Pin C319-10, Circuit 298 (P/O). • Is the voltage reading B+? → **Yes** GO to **E5.** → **No** SERVICE Circuit 298 (P/O) for an open. TEST the system for normal operation.

Official Licensed Product
Ford Motor Company

(Continued)

DIAGNOSIS AND TESTING (Continued)

PINPOINT TEST E: THE TRANSMISSION CONTROL INDICATOR LAMP IS NOT OPERATING PROPERLY (Continued)

TEST CONDITIONS	TEST DETAILS/RESULTS/ACTIONS
E5 CHECK THE INPUT TO THE POWERTRAIN CONTROL MODULE	
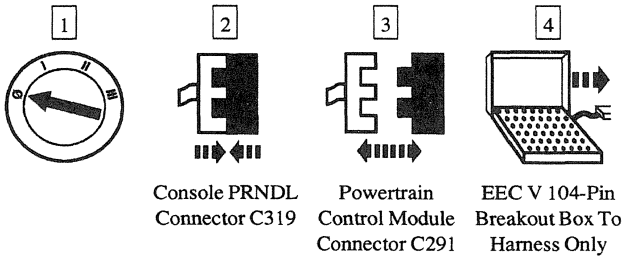	
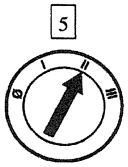	
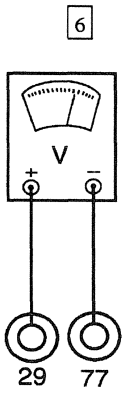 AD0212-A	6 Measure the voltage between the breakout box Pin 29, Circuit 224 (T/W) and Pin 77, Circuit 57 (BK).
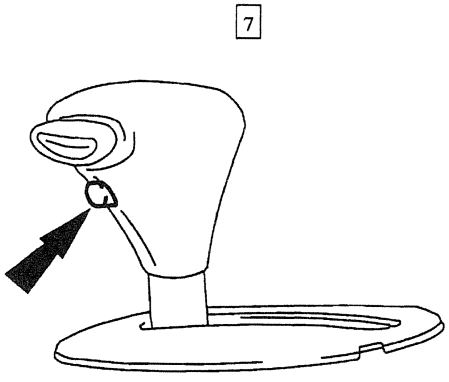 AD0218-A	7 Press the transmission control switch several times while monitoring the voltmeter. • Does the voltage cycle as the transmission control switch is pressed? → **Yes** REPLACE the powertrain control module. TEST the system for normal operation. → **No** GO to **E6.**

Official Licensed Product
Ford Motor Company

(Continued)

DIAGNOSIS AND TESTING (Continued)

PINPOINT TEST E: THE TRANSMISSION CONTROL INDICATOR LAMP IS NOT OPERATING PROPERLY (Continued)

TEST CONDITIONS	TEST DETAILS/RESULTS/ACTIONS
E6 CHECK CIRCUIT 224 (T/W) FOR SHORT TO GROUND	
Console PRNDL Connector C319 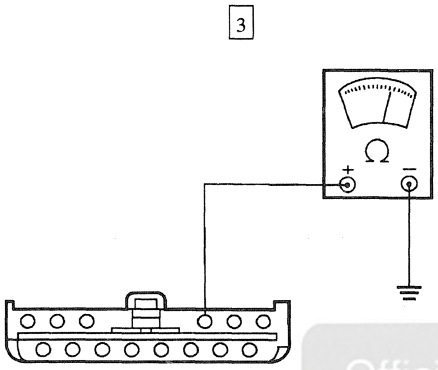 AD0213-B	3 Measure the resistance between the console PRNDL connector Pin C319-11, Circuit 224 (T/W) and the ground. • Is the resistance 10 K ohms or less? → **Yes** SERVICE Circuit 224 (T/W) for a short to the ground. TEST the system for normal operation. → **No** GO to **E7.**
E7 CHECK CIRCUIT 224 (T/W) FOR OPEN	
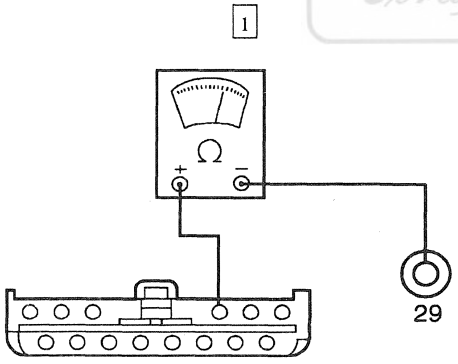 AD0214-A	1 Measure the resistance of Circuit 224 (T/W) between the console PRNDL connector Pin C319-11 and the breakout box Pin 29. • Is the resistance 5 ohms or less? → **Yes** REPLACE the transmission control switch. TEST the system for normal operation. → **No** SERVICE Circuit 224 (T/W) for an open. TEST the system for normal operation.

Official Licensed Product Ford Motor Company

(Continued)

DIAGNOSIS AND TESTING (Continued)

PINPOINT TEST E: THE TRANSMISSION CONTROL INDICATOR LAMP IS NOT OPERATING PROPERLY (Continued)

TEST CONDITIONS	TEST DETAILS/RESULTS/ACTIONS
E8 CHECK THE DTCs	
 1 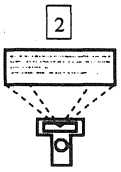 2 Retrieve Message Center Continuous And On-Demand DTCs	• Is the DTC U1136 retrieved? → **Yes** REPLACE the powertrain control module. TEST the system for normal operation. → **No** GO to **E9.**
E9 CHECK THE MESSAGE CENTER	
 1 2 Message Center Active Command O/D INDICATOR CONTROL 3 Trigger O/DOFFLMP on	• Does the O/D OFF indicator illuminate? → **Yes** REPLACE the message center. TEST the system for normal operation. → **No** GO to **E10.**

Ford Licensed Product Ford Motor Company

(Continued)

DIAGNOSIS AND TESTING (Continued)

PINPOINT TEST E: THE TRANSMISSION CONTROL INDICATOR LAMP IS NOT OPERATING PROPERLY (Continued)

TEST CONDITIONS	TEST DETAILS/RESULTS/ACTIONS
E10 CHECK THE MESSAGE CENTER FOR AN INTERNAL SHORT	
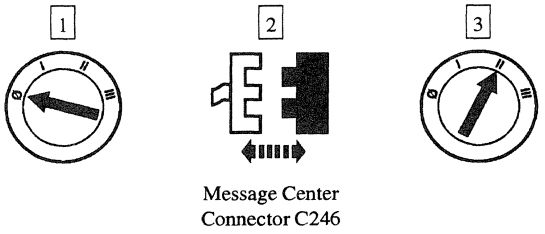 Message Center Connector C246 4 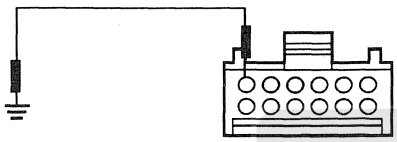 AD0217-A	4 Connect a jumper wire between the message center connector Pin C246-6, Circuit 911 (W/LG) and the ground. • Does the O/D OFF indicator illuminate? → **Yes** REPLACE the message center. TEST the system for normal operation. → **No** GO to **E11.**
E11 CHECK CIRCUIT 911 (W/LG) FOR AN OPEN	
 Warning Indicator Panel Connector C238 3 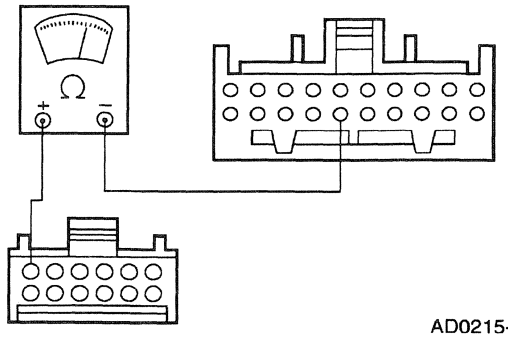 AD0215-B	3 Measure the resistance of Circuit 911 (W/LG) between the warning indicator panel connector Pin C238-16 and the message center indicator connector Pin C246-6. • Is the resistance 5 ohms or less? → **Yes** GO to **E12.** → **No** SERVICE Circuit 911 (W/LG) for an open. TEST the system for normal operation.

Official Licensed Product

(Continued)

DIAGNOSIS AND TESTING (Continued)

PINPOINT TEST E: THE TRANSMISSION CONTROL INDICATOR LAMP IS NOT OPERATING PROPERLY (Continued)

TEST CONDITIONS	TEST DETAILS/RESULTS/ACTIONS
E12 CHECK THE BULB	
1 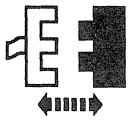 O/D OFF Indicator Bulb 2 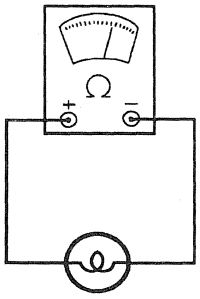 AD0216-A	2 Measure the resistance between the bulb terminals. • Is the bulb OK? → **Yes** REPLACE the warning indicator panel. TEST the system for normal operation. → **No** REPLACE the O/D OFF indicator bulb. TEST the system for normal operation.

Official Licensed Product
Ford Motor Company

REMOVAL AND INSTALLATION

Cable and Bracket

Removal

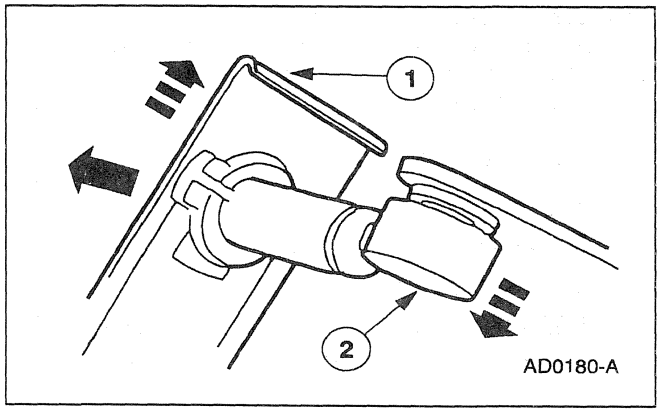

1. Remove the transmission control selector dial bezel (7D443); refer to Bezel in this section.
2. Disconnect the transmission control selector dial bezel.
   1 Slide the retaining clip.
   2 Pull the shift cable from the lever cam.
3. Raise and support the vehicle; refer to Section 100-02.

REMOVAL AND INSTALLATION (Continued)

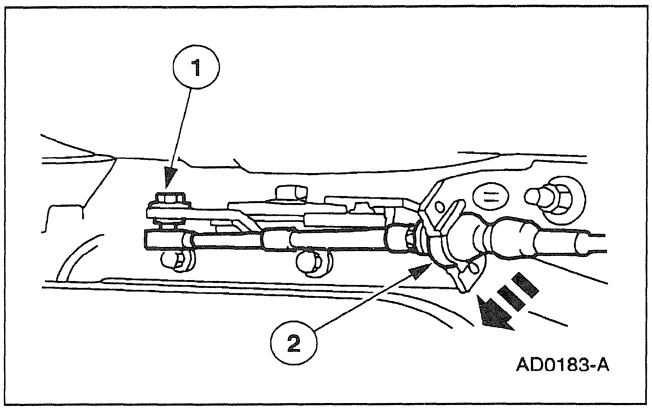

4. Remove the shift cable and bracket (7E395).
   1 Remove the nut from the shift cable and the shifter.
   2 Remove the clip from the shift cable bracket and remove the shift cable and bracket.

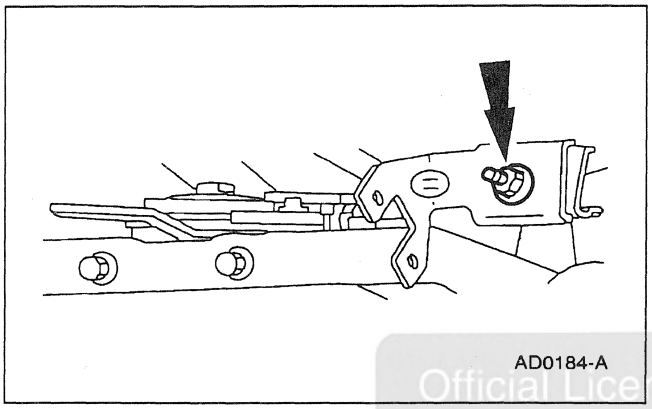

5. Remove the nut from the transmission shift cable bracket.

Official Licensed Product
Ford Motor Company

Installation

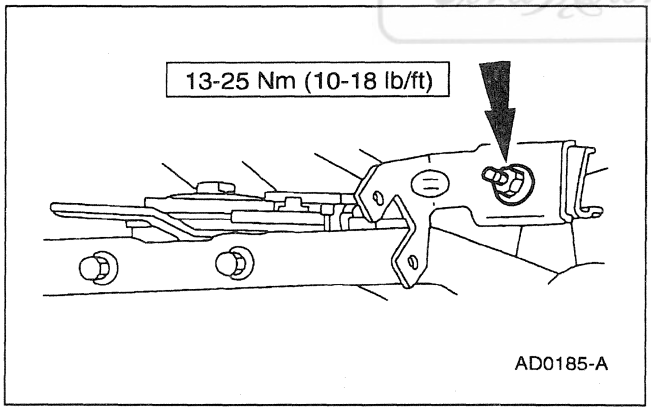

1. Follow the removal procedure in reverse order.

REMOVAL AND INSTALLATION (Continued)

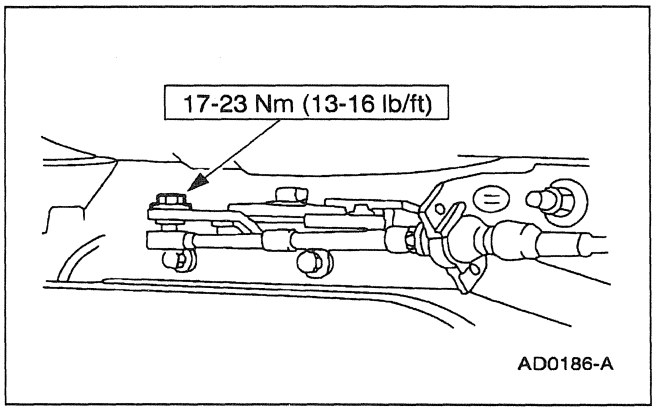

Selector Lever

Removal

1. Remove the console panel (045A36); refer to Section 501-12.
2. Place the transmission range selector lever in DRIVE.

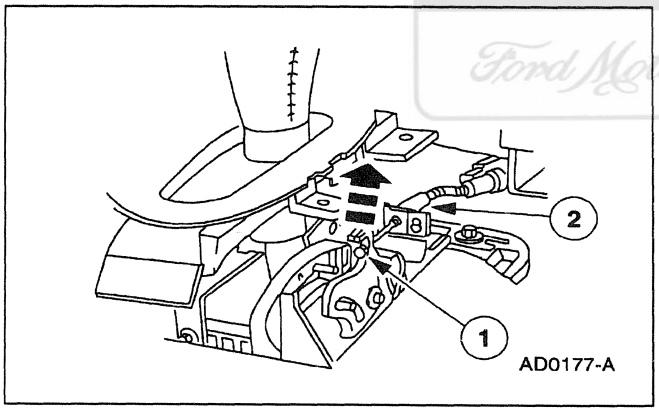

3. Disconnect the ignition/shifter interlock cable (3F719).
   1 Release the ignition/shifter interlock cable from the clip.
   2 Remove the ignition/shifter interlock cable from the bracket.
4. Remove the transmission control selector dial bezel (7D443); refer to Bezel in this section.

Official Licensed Product
Ford Motor Company

REMOVAL AND INSTALLATION (Continued)

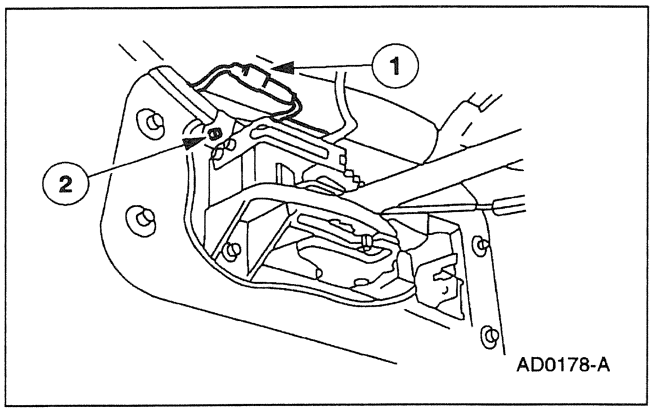

5. Remove the wiring above the transmission range selector lever.
   1 Disconnect the connector.
   2 Remove the retaining bolt wiring clamp.

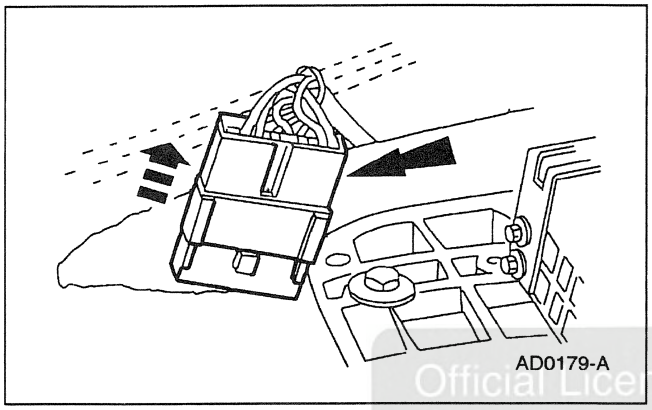

6. Disconnect the transmission range selector lever wiring connector.

Official Licensed Product
Ford Motor Company

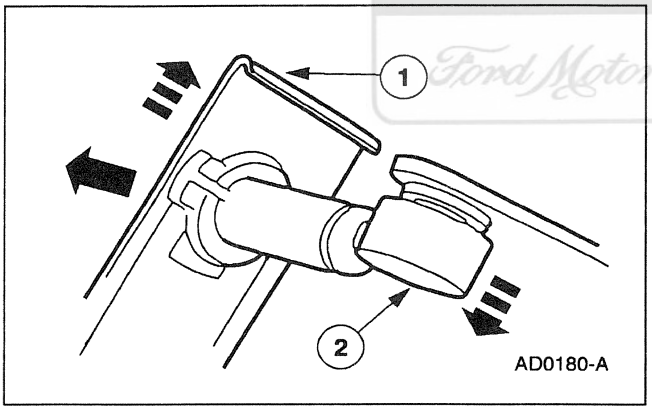

7. Disconnect the shift cable and bracket (7E395).
   1 Slide the retaining clip.
   2 Pull the shift cable from lever cam.

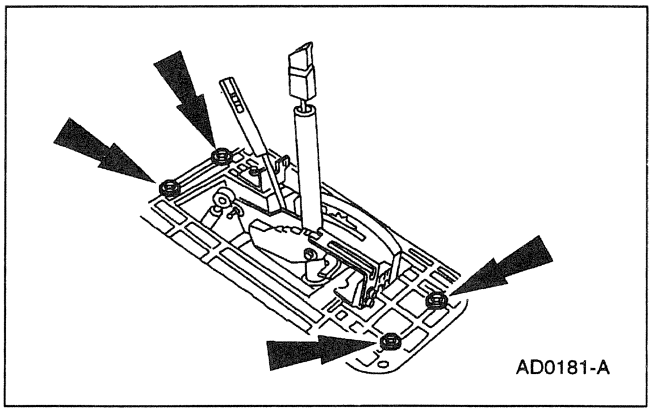

8. Remove the bolts from the transmission range selector lever and remove the transmission range selector lever.

REMOVAL AND INSTALLATION (Continued)

Installation

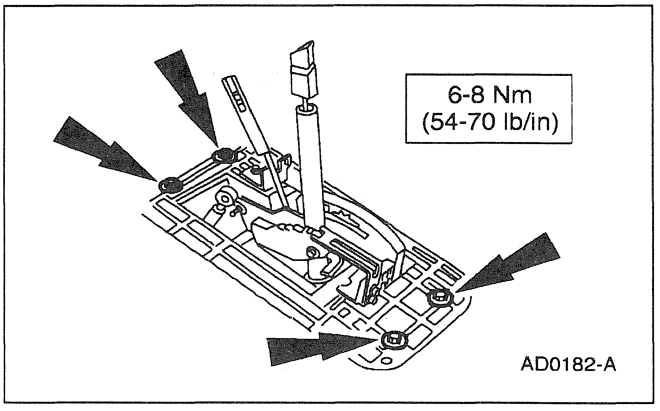

1. Follow the removal procedure in reverse order.

Bezel

Removal

1. Remove the console finish panel (04567); refer to Section 501-12.

Official Licensed Product
Ford Motor Company

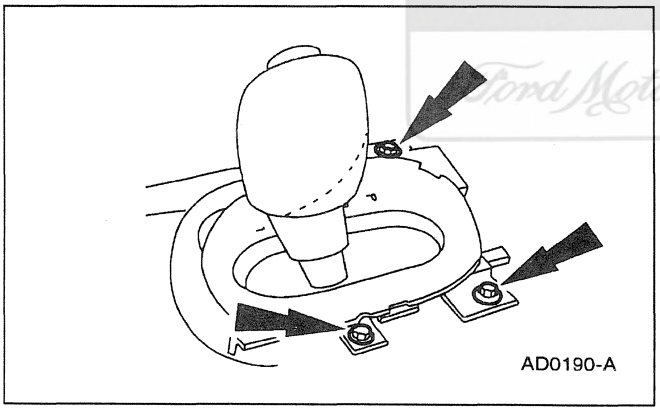

2. Remove the screws from the transmission control selector dial bezel.

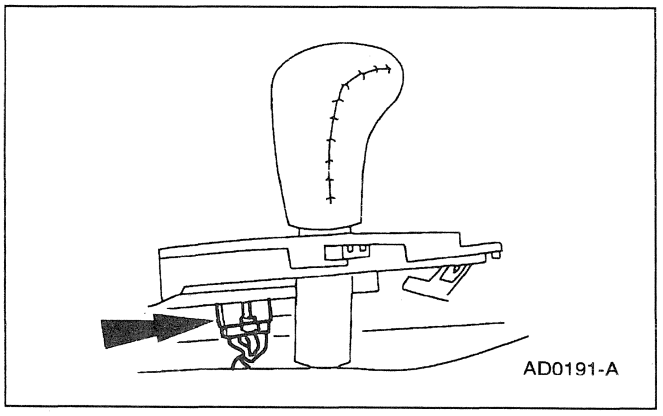

3. Disconnect the connector from the transmission control selector dial bezel.

4. Remove the transmission range selector lever knob; refer to Knob in this section.

REMOVAL AND INSTALLATION (Continued)

5. Remove the transmission control selector dial bezel (7D443) from vehicle.

Installation

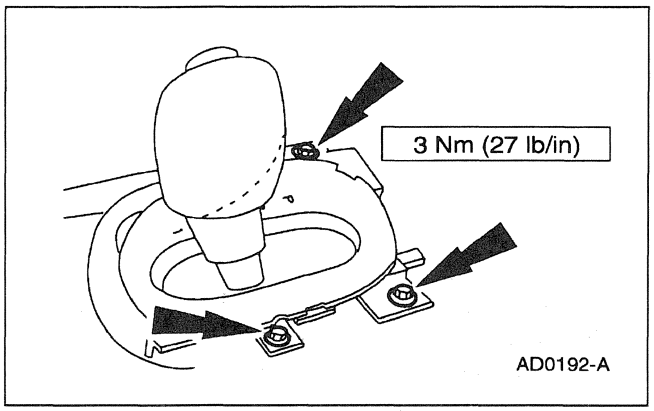

1. Follow the removal procedure in reverse order.

Bulb

Removal

Official Licensed Product
Ford Motor Company

1. Remove the console finish panel (04567); refer to Section 501-12.

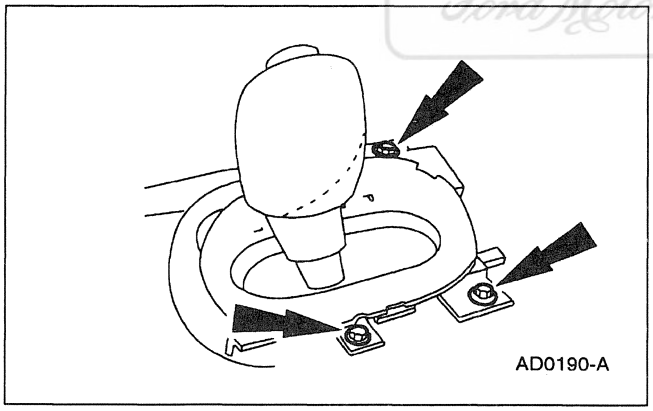

2. Remove the screw from the transmission control selector dial bezel (7D443).

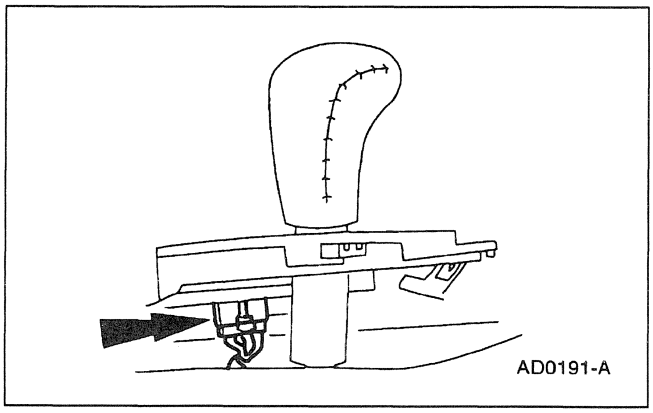

3. Disconnect the connector from the transmission control selector dial bezel.

REMOVAL AND INSTALLATION (Continued)

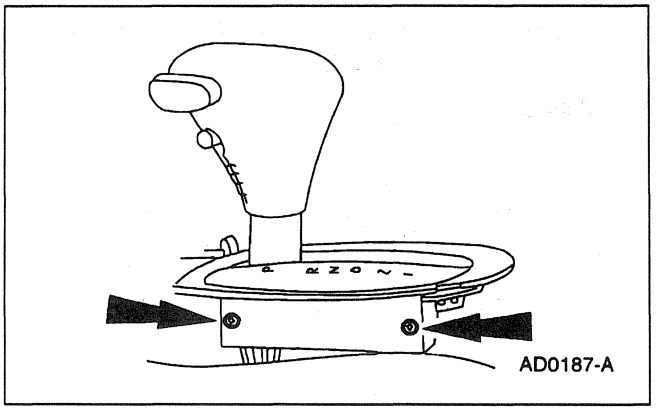

4. Remove the screws from the transmission control selector dial bezel.

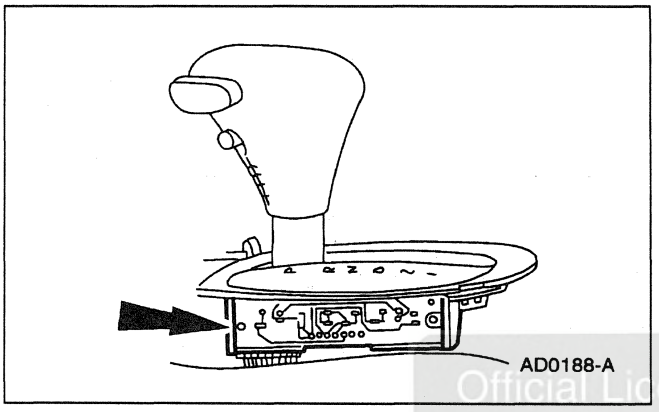

5. ⚠ **CAUTION: The circuit board is sensitive to static electrical charges. If exposed to these charges, damage may result.**

   Remove the circuit board.

Official Licensed Product
Ford Motor Company

Installation

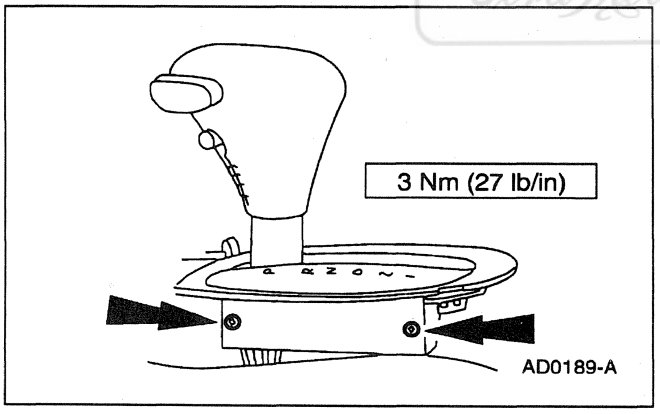

1. Follow the removal procedure in reverse order.

REMOVAL AND INSTALLATION (Continued)

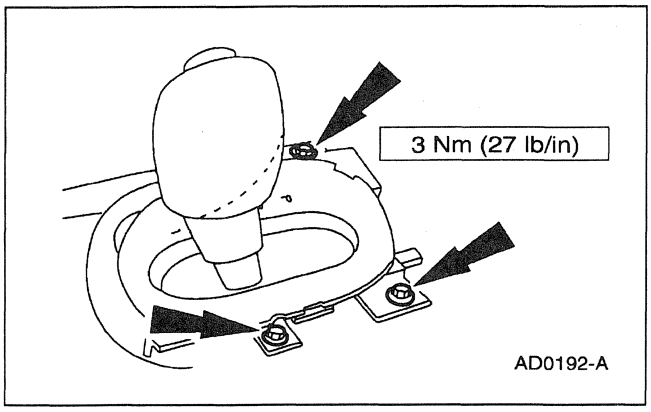

Knob

Removal

1. Place the transmission range selector lever in PARK.

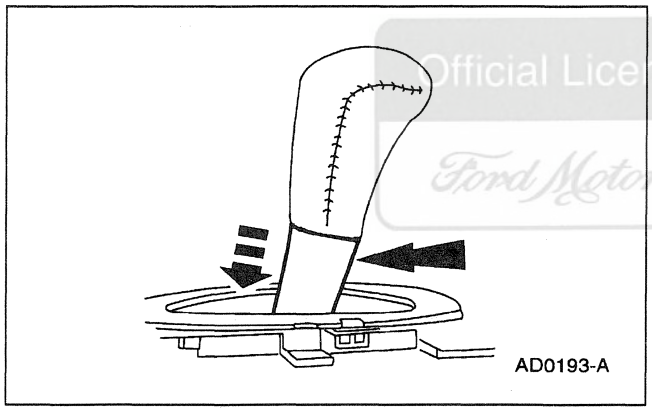

2. Slide the sleeve down.

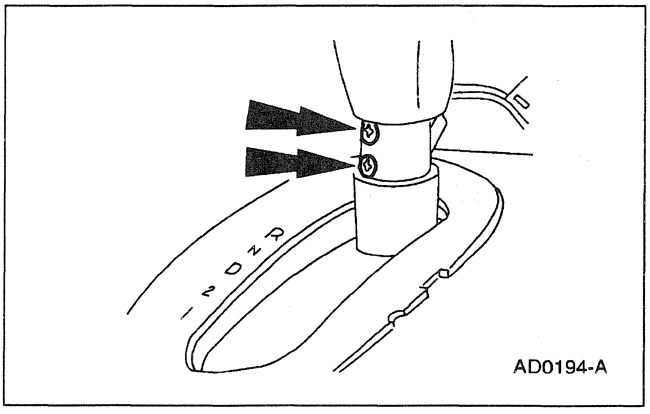

3. Remove the attachment screw from the selector lever. Remove the selector lever knob.

Official Licensed Product
Ford Motor Company

REMOVAL AND INSTALLATION (Continued)

Installation

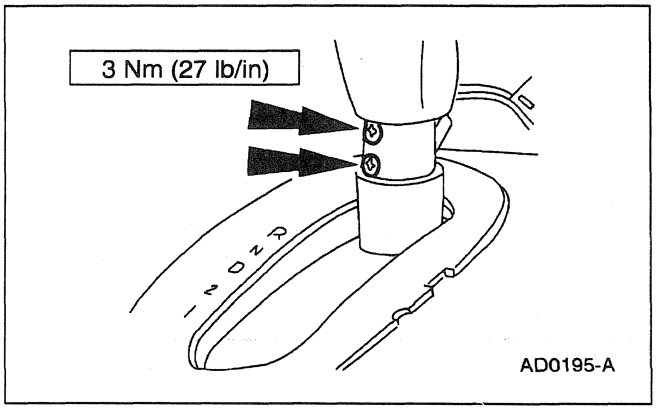

1. Follow the removal procedure in reverse order.

GENERAL PROCEDURES

Cable Adjustment

NOTE: The transmission range linkage adjustments should be performed in the order in which they appear.

Official Licensed Product
Ford Motor Company

1. Position the transmission range selector lever in the OVERDRIVE position.
2. Raise and support the vehicle; refer to Section 100-02.
3. Loosen the transmission shift cable and the bracket-to-cable retaining nut.
4. Move the transmission manual control lever to the OVERDRIVE position (third detent position from the full clockwise position).
5. With the selector lever and the manual control lever in the OVERDRIVE position, tighten the retaining nut to 13-25 Nm (10-18 lb-ft).
6. Check the operation of the transmission in each transmission range.

SPECIFICATIONS

Torque Specifications

Description	Nm	Lb/Ft	Lb/In
Shifter-to-Floorpan Bolts	6-8	—	54-70
Cable and Bracket Nut	13-25	10-18	—
Gearshift to Shift Cable Stud Retaining Nut	17-23	13-16	—
Shift Knob Attachment Screws	3	—	26

(Continued)

Torque Specifications

Description	Nm	Lb/Ft	Lb/In
Circuit Board to Bezel Screws	3	—	27
Transmission Control Selector Dial Bezel Bolts	3	—	27

Official Licensed Product
Ford Motor Company

SECTION 309-00 Exhaust Components — General Information

VEHICLE APPLICATION: Mark VIII

SUBJECT	PAGE
DESCRIPTION AND OPERATION	
Exhaust System	309-00-2
DIAGNOSIS AND TESTING	
Exhaust System	309-00-4
Inspection and Verification	309-00-4
Pinpoint Tests	309-00-5
Symptom Chart	309-00-5
REMOVAL AND INSTALLATION	
Dual Converter Y Pipe	309-00-9
Hanger Insulators	309-00-12
Muffler/Tailpipe	309-00-7
GENERAL PROCEDURES	
Exhaust System Alignment	309-00-14
SPECIFICATIONS	309-00-14

Official Licensed Product
Ford Motor Company

DESCRIPTION AND OPERATION

Exhaust System

Component Location—LSC

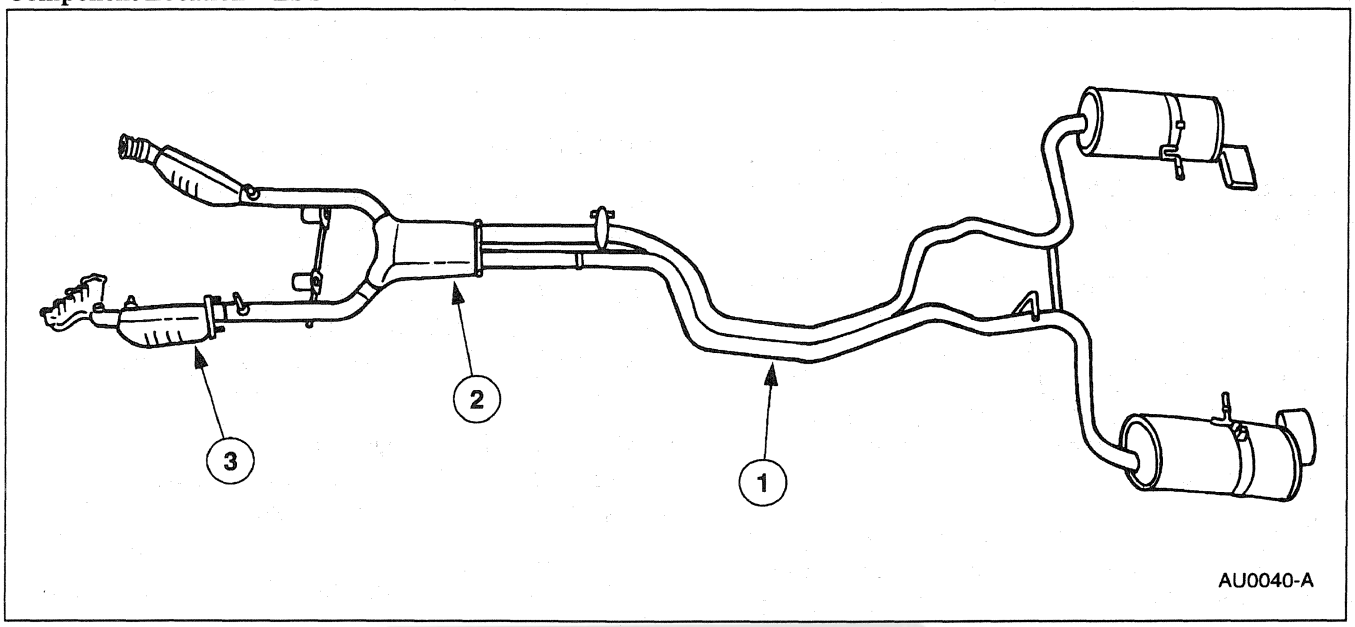

Item	Part Number	Description
1	5230	Muffler
2	5F250	Dual Converter Y Pipe
3	5G232	Manifold and Shell Assembly

Official Licensed Product
Ford Motor Company

Component Location 4.6L (V2) Engine

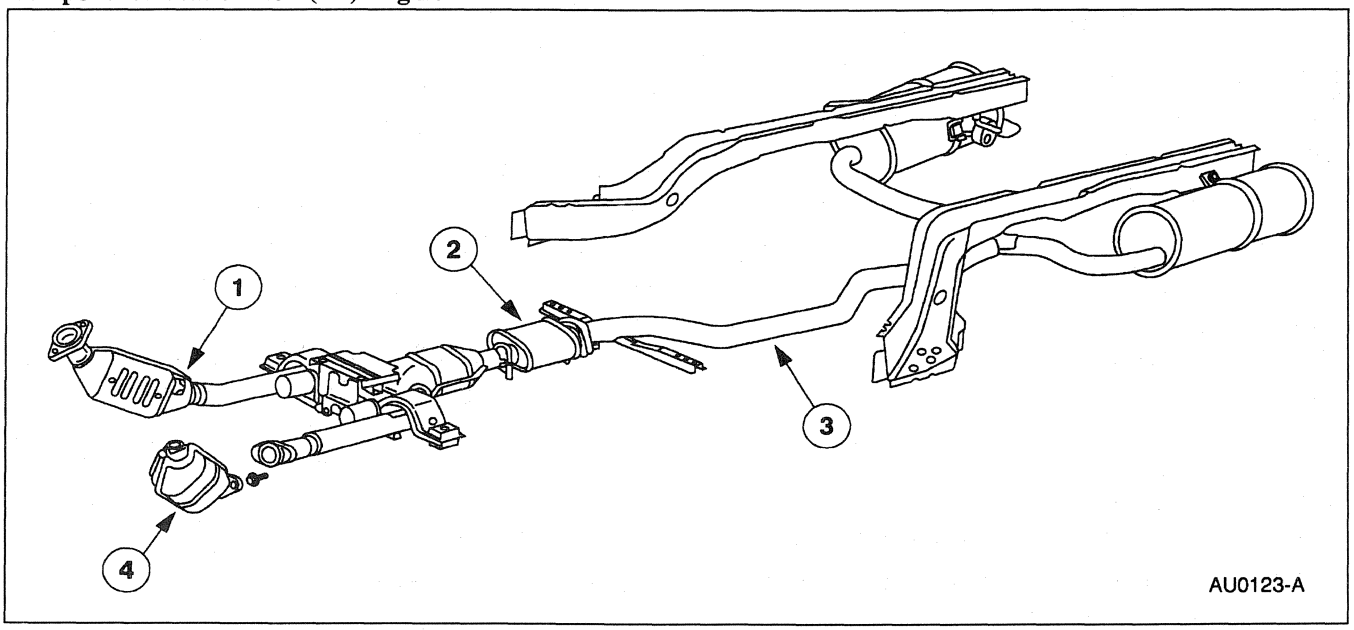

DESCRIPTION AND OPERATION (Continued)

Item	Part Number	Description
1	5F250	Dual Converter Y Pipe
2	5212	Resonator

Item	Part Number	Description
3	5230	Muffler
4	5212	Resonator

(Continued)

WARNING: THE NORMAL OPERATING TEMPERATURE OF THE EXHAUST SYSTEM IS VERY HIGH. NEVER ATTEMPT TO SERVICE ANY PART OF THE SYSTEM UNTIL IT HAS COOLED. BE ESPECIALLY CAREFUL WHEN WORKING AROUND THE DUAL CONVERTER Y PIPE (5F250). THE TEMPERATURE OF THE DUAL CONVERTER Y PIPE RISES TO A HIGH LEVEL AFTER ONLY A FEW MINUTES OF ENGINE OPERATION.

CAUTION: When servicing exhaust system or removing exhaust components, disconnect all heated oxygen sensors (HO2S)(9F472) at the wiring connectors to prevent damage to the heated oxygen sensors and wiring harness. Refer to Section 303-14 for location of the heated oxygen sensors .

The exhaust system is equipped with:

- dual converter Y pipe
- muffler inlet pipe
- muffler (5230)
- manifold and shell assembly (5G232)

Three-Way Catalytic Converter (TWC)

The three way catalytic converters (TWC)(5E212), mounted in the engine exhaust stream:

- play a major role in the emission control system.
- work as a gas reactor.
- provide catalytic function to speed up the heat producing chemical reaction between components of the exhaust gases in order to reduce the air pollutants.
- house catalyst material inside the three way catalytic converter , which is made of a ceramic substrate that is coated with a high surface area alumina and impregnated with catalytically active platinum.
- provide access to the surface of the catalyst material that plays a major role in the heat producing chemical reaction.

Precautions

WARNING: EXHAUST GASES CONTAIN CARBON MONOXIDE WHICH CAN BE HARMFUL TO HEALTH AND ARE POTENTIALLY LETHAL. EXHAUST SYSTEM LEAKS SHOULD BE SERVICED IMMEDIATELY. NEVER OPERATE THE ENGINE IN ENCLOSED AREAS.

CAUTION: Leaded fuel must not be used in a vehicle fitted with a three way catalytic converter —the lead will poison the catalyst.

The following precautions must be observed when operating a vehicle equipped with a three way catalytic converter.

If a vehicle is continually misfueled:

- The lead in the fuel will be deposited in the converter and completely blanket the catalyst.
- Lead combines chemically with platinum to ''poison'' the catalyst.
- Continuous use of leaded fuels can totally destroy the catalyst and render the converter useless.

The addition of lead to the converter can also solidify the catalyst, causing:

- excessive back pressure in the exhaust system.
- possible engine damage.

Extremely high temperatures of 1100°C (2012°F) or over, due to misfiring or over-rich fuel/air mixture, will cause the ceramic base to sinter or burn, destroying the converter.

The three way catalytic converters have been designed to provide a long service life. No maintenance is necessary for the three way catalytic converters. However, the following conditions must be avoided.

- driving downhill with the gears engaged and the ignition switch OFF
- driving with misfiring engine

Official Licensed Product Ford Motor Company

DESCRIPTION AND OPERATION (Continued)

- running the engine continuously with a misfiring spark plug (12405). When idling is unstable or when the engine lacks power, refer to Powertrain Control/Emissions Diagnosis Manual [1].
- Do not park or stop the vehicle over combustible material. If the vehicle is parked or stopped over combustible material such as dry grass, the material may be ignited by the high temperature of the three way catalytic converter and muffler.

DIAGNOSIS AND TESTING

Exhaust System

Inspection and Verification

1. Verify the customer's concern by operating the engine to duplicate the condition.
2. Inspect to determine if any of the following mechanical concerns apply:

Visual Inspection Chart

Mechanical
• External leaks in the exhaust system are often accompanied by noises and exhaust fumes. A visual inspection of the exhaust system usually will show the location of a leak. When checking for exhaust leakage or noise, inspect the entire system for burnout holes, loose or corroded clamps, three way catalytic converter, dual converter Y pipe, muffler or muffler inlet pipe. Examine the underbody for grayish-white or black exhaust soot which would indicate exhaust leakage at that point. On small leaks, have an assistant hold rags over the tailpipe outlet while listening for the leak. This helps magnify the leak.
• **NOTE:** In the event of a three-way catalytic converter failure, always check the muffler to be sure converter debris has not entered muffler. When testing for a rattle or vibration condition, it is helpful to use a rubber mallet. Tap on the exhaust components to simulate the bouncing action of the exhaust while watching for exhaust-to-body/chassis contact. Also look for loose or rusted flange connections, loose or damaged exhaust shields or clamp and loose or broken exhaust outlet pipe frame brackets. • Lightly tap on the muffler and three way catalytic converter to determine if there are loose or broken baffles in the muffler or a loose or broken element in the three way catalytic converter.

3. If inspection reveals obvious concerns that can be readily identified, service as required.
4. If the concerns remain after the inspection, determine the condition(s) and go to the Symptom Chart.

Original Licensed Product Ford Motor Company

1 Can be purchased as a separate item.

DIAGNOSIS AND TESTING (Continued)

Symptom Chart

SYMPTOM CHART

Condition	Possible Source	Action
• Noisy or Leaking Exhaust	• Exhaust leak. • Misaligned exhaust. • Loose clamps or fasteners. • Restricted exhaust. • Loose heated oxygen sensors.	• REFER to Inspection and Verification. If no concern found, GO to Pinpoint Test A.
• Loss of Power	• Fuel system. • Ignition system. • Electronic engine controls. • Restricted exhaust system.	• REFER to the Powertrain Control/Emissions Diagnosis Manual [2] for fuel system, ignition system and electronic engine controls diagnosis. If concern is still present, GO to Pinpoint Test B.

Pinpoint Tests

PINPOINT TEST A: NOISY OR LEAKING EXHAUST

TEST CONDITIONS	TEST DETAILS/RESULTS/ACTIONS
A1 EXHAUST SYSTEM INSPECTION	
	[1] Inspect exhaust system components for damage and deterioration. • Are the exhaust components OK? → **Yes** VERIFY customer concern. → **No** REPLACE any damaged or deteriorated exhaust components.

Official Licensed Product
Ford Motor Company®

PINPOINT TEST B: LOSS OF POWER

TEST CONDITIONS	TEST DETAILS/RESULTS/ACTIONS
B1 EXHAUST MANIFOLDS RESTRICTED	
	[1] Remove the exhaust manifold(s); refer to Section 303-01.

(Continued)

2 Can be purchased as a separate item.

DIAGNOSIS AND TESTING (Continued)

PINPOINT TEST B: LOSS OF POWER (Continued)

TEST CONDITIONS	TEST DETAILS/RESULTS/ACTIONS
B1 EXHAUST MANIFOLDS RESTRICTED (Continued)	
	[2] **NOTE:** Do not use a wire or light to check ports. The restriction may be large enough for them to pass through but small enough to cause excessive back pressure at high engine rpm. Inspect the parts for casting flash by dropping a length of chain into each port. • Is the exhaust manifold OK? → **Yes** GO to **B2**. → **No** REMOVE the casting flash. If the flash cannot be removed, REPLACE the exhaust manifold(s). TEST the system for normal operation.
B2 VACUUM TEST	
	[1] Perform a vacuum test; refer to Section 303-01. • Is neutral vacuum above 53.8 kPa (16 in-Hg)? → **Yes** REFER to the Powertrain Control/Emissions Diagnosis Manual [3]. → **No** GO to **B3**.
B3 VACUUM TEST-EXHAUST DISCONNECTED	
	[1] Disconnect the exhaust system at the manifolds; refer to Dual Converter Y Pipe in this section. [2] Repeat the vacuum test. • Is the manifold vacuum above 53.8 kPa (16 in-Hg). → **Yes** GO to **B4**. → **No** System operating normally.
B4 VACUUM TEST-CATALYTIC CONVERTER(S) ON, MUFFLER(S) OFF	
	[1] Reconnect the exhaust system at exhaust manifold(s); refer to Dual Converter Y Pipe in this section.

(Continued)

Official Licensed Product
Ford Motor Company

3 Can be purchased as a separate item.

DIAGNOSIS AND TESTING (Continued)

PINPOINT TEST B: LOSS OF POWER (Continued)

TEST CONDITIONS	TEST DETAILS/RESULTS/ACTIONS
B4 VACUUM TEST-CATALYTIC CONVERTER(S) ON, MUFFLER(S) OFF (Continued)	
	2 Disconnect the muffler(s); refer to Muffler/Tailpipe in this section. 3 Repeat the vacuum test. • Is the manifold vacuum above 53.8 kPa (16 in-Hg)? → **Yes** REPLACE the muffler. TEST the system for normal operation. → **No** REPLACE the three way catalytic converter and INSPECT muffler to be sure three way catalytic converter debris has not entered muffler.

REMOVAL AND INSTALLATION

Official Licensed Product
Ford Motor Company

Muffler/Tailpipe

Removal

1. Raise and support the vehicle; refer to Section 100-02.

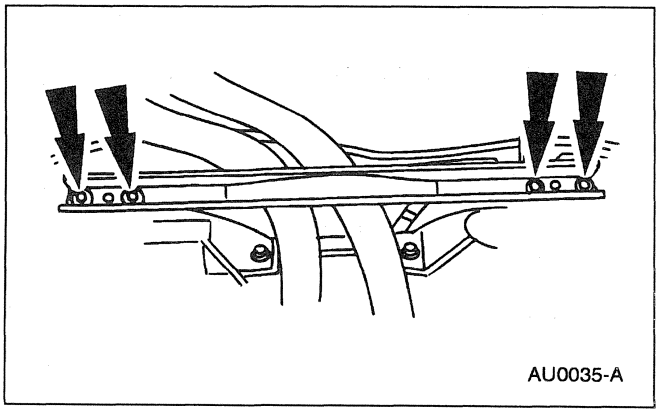

2. Remove the bolts.

REMOVAL AND INSTALLATION (Continued)

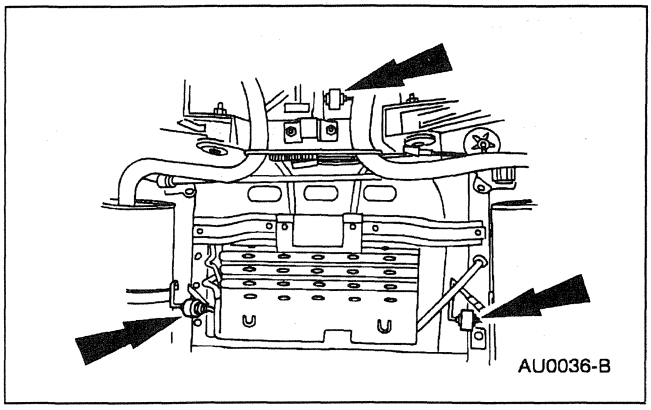

3. Disconnect the three exhaust hanger insulators from the muffler.

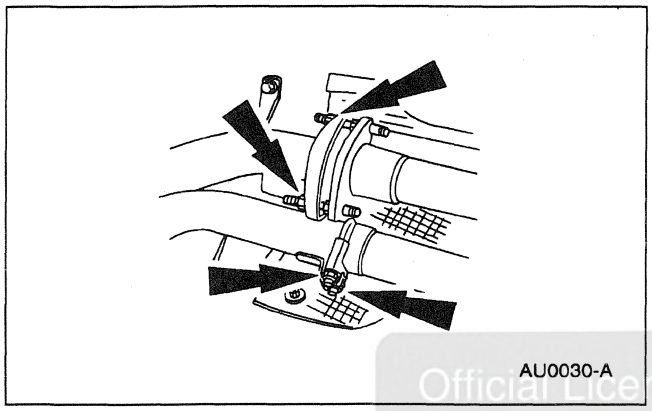

4. Remove the dual converter Y pipe to muffler retaining nuts.
   - LSC only - remove the clamp.

Official Licensed Product
Ford Motor Company

5. Remove the muffler (5230) from the dual converter Y pipe (5F250).

6. Inspect the muffler for cracks, broken welds and corrosion.

7. Replace the old clamps.

REMOVAL AND INSTALLATION (Continued)

Installation

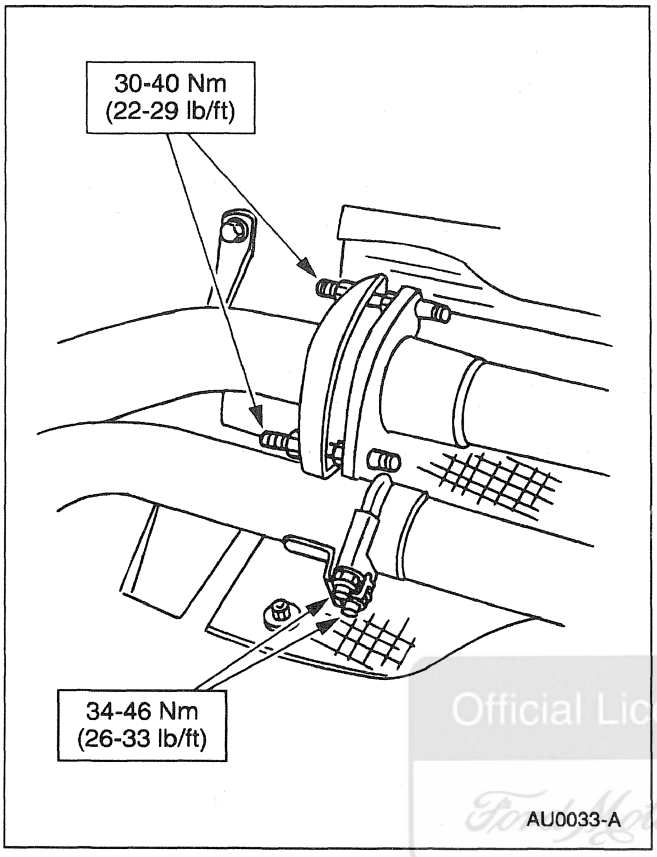

1. Follow the removal procedure in reverse order.

Official Licensed Product
Ford Motor Company

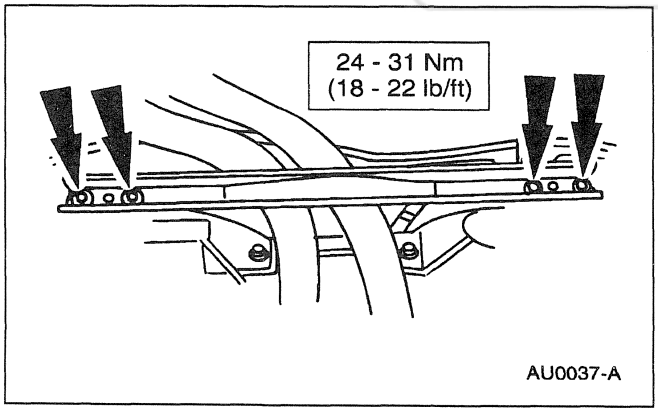

Dual Converter Y Pipe

Removal

1. Remove the muffler (5230); refer to Muffler/Tailpipe in this section.

REMOVAL AND INSTALLATION (Continued)

2. Disconnect the heated oxygen sensor (HO2S)(9F472) at wiring connectors; refer to Section 303-14.

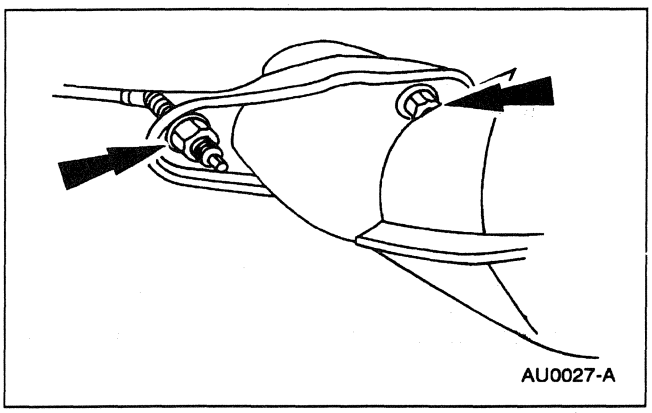
AU0027-A

3. Remove the dual converter Y-pipe to RH exhaust manifold retaining nuts.

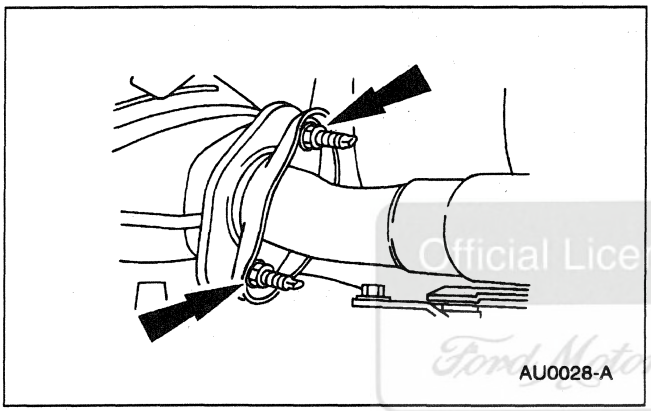
AU0028-A

4. Remove the dual converter Y-pipe to LH manifold and the converter assembly retaining nuts.

Official Licensed Product
Ford Motor Company

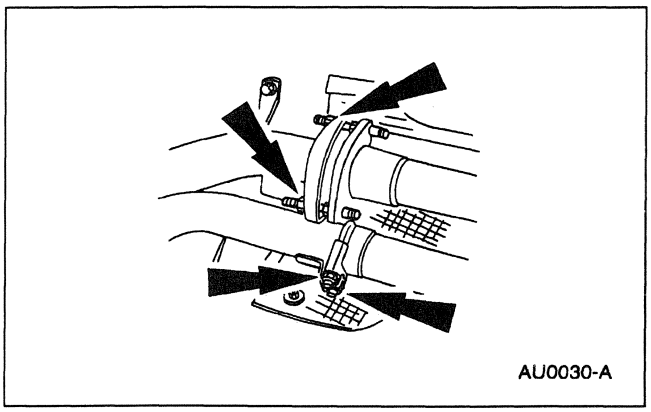
AU0030-A

5. Remove dual converter Y-pipe to muffler retaining nuts.
   - LSC only - remove the clamp.

REMOVAL AND INSTALLATION (Continued)

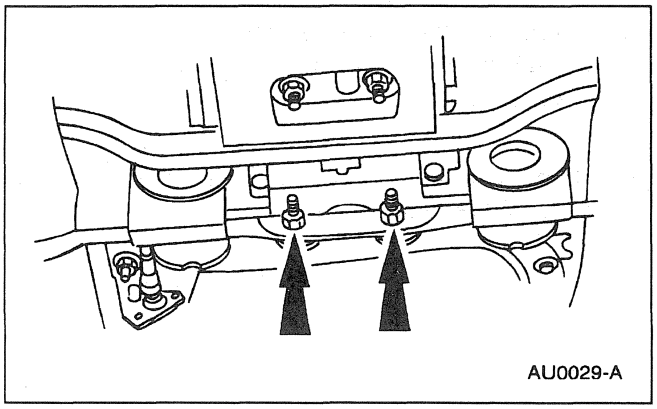

6. Remove the retaining nuts from the exhaust outlet pipe frame bracket (5260).

7. Remove the dual converter Y pipe (5F250) from the vehicle.

8. Inspect the dual converter Y pipe for cracks, broken welds and corrosion.

9. Replace the clamps.

Installation

Official Licensed Product
Ford Motor Company

1. Follow the removal procedure in reverse order.

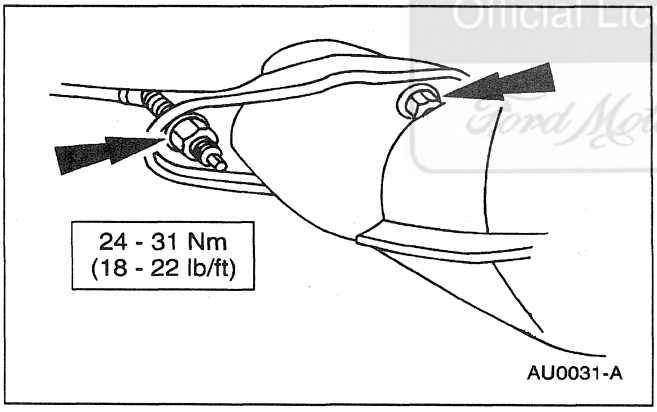

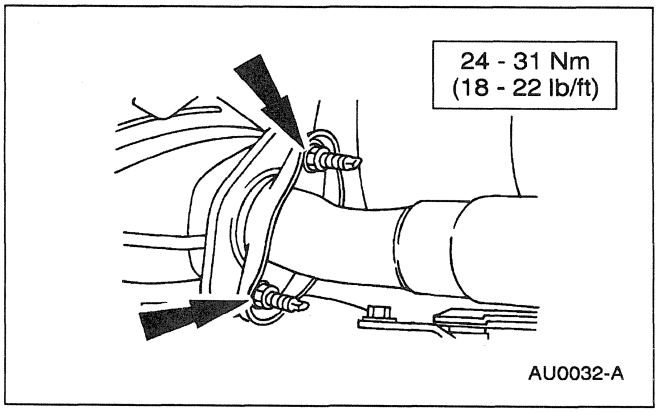

REMOVAL AND INSTALLATION (Continued)

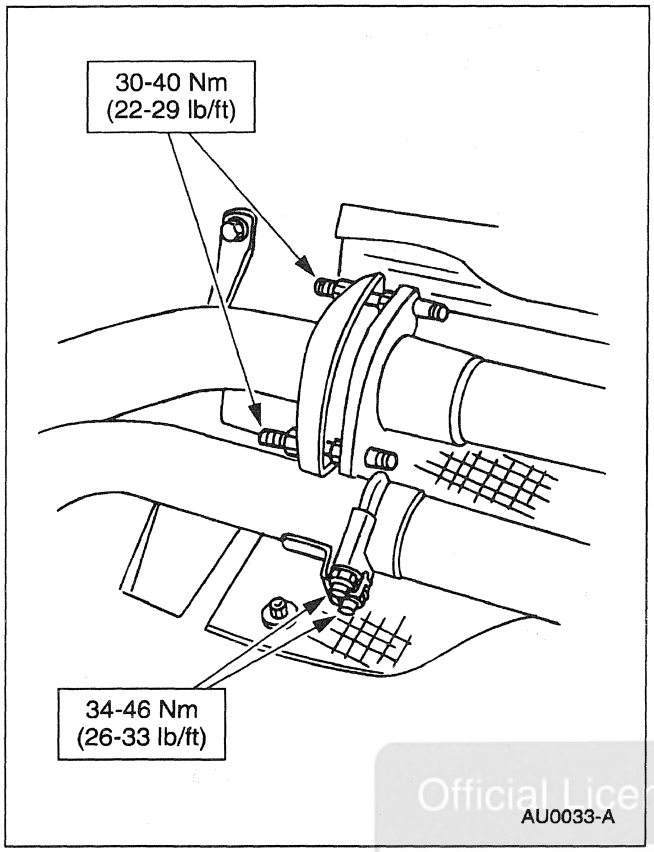

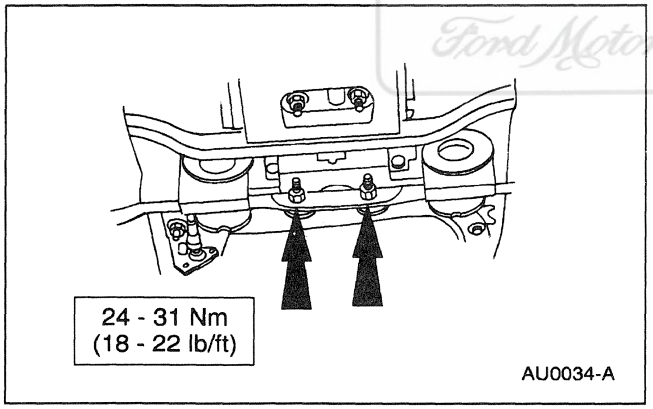

Official Licensed Product
Ford Motor Company

Hanger Insulators

Removal

1. Raise and support the vehicle; refer to Section 100-02.

2. Support the exhaust system with a suitable jack stand.

REMOVAL AND INSTALLATION (Continued)

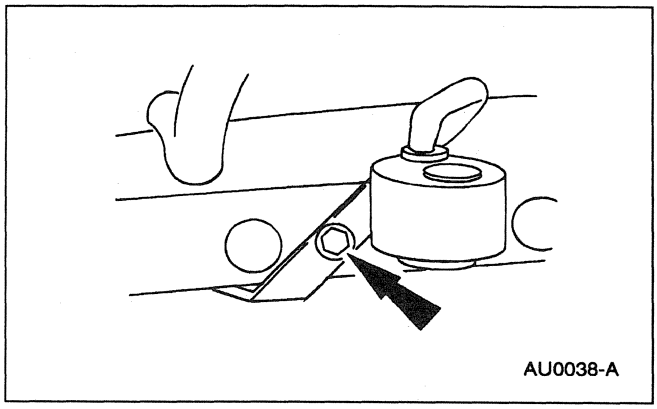

3. Disconnect the exhaust hanger insulator (5F262) from the muffler (5230).

4. Remove the exhaust hanger insulator retaining bolt.

   Repeat for both RH and LH brackets.

5. Remove the center isolator from the subframe or muffler hanger.

Installation

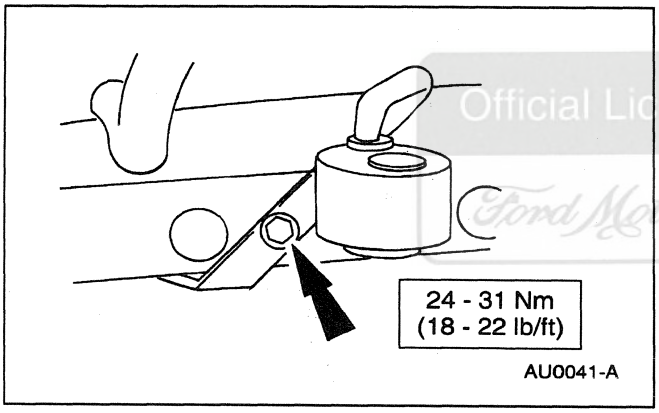

1. **NOTE:** Insulator may be lubricated with liquid soap or silicone to ease the installation.

   Follow the removal procedure in reverse order.

Official Licensed Product
Ford Motor Company

GENERAL PROCEDURES

Exhaust System Alignment

NOTE: A misaligned exhaust system is usually indicated by vibration, grounding, rattling or binding of system components. Often the associated noise is hard to distinguish from other chassis noises. Look for broken or loose clamps and bent brackets. Replace or tighten as necessary. It is important that exhaust clearances and alignment be maintained.

1. Perform the following procedures to align the system:
   1 Loosen the retaining hardware, clamp and the pipe support brackets.
   2 Align the exhaust system, beginning at the front of the vehicle, to established maximum clearance.
   3 **NOTE:** Tighten the flange nuts and the exhaust manifold nuts evenly and alternately. Tighten to 24-31 Nm (18-22 lb/ft).

     Tighten all retainers.
   4 **NOTE:** Three way catalytic converters (TWC)(5E212), dual converter Y pipes (5F250), manifold assembly muffler inlet pipe, Mufflers, brackets clamps and insulators should be replaced if they are worn or become badly corroded. Do not attempt to service these parts.

     Start the engine and check the exhaust system for leaks.

Official Licensed Product
Ford Motor Company

SPECIFICATIONS

Torque Specifications

Description	Nm	Lb/Ft
Dual Converter Y-Pipe Flange Nuts	30-40	22-29
Dual Converter Y-Pipes to Muffler U-Bolts (Clamps)	34-46	26-33
Support Bracket to Frame Bolts	24-31	18-22
Dual Converter Y-Pipe to RH Exhaust Manifold Nut	24-31	18-22

(Continued)

Torque Specifications

Description	Nm	Lb/Ft
Dual Converter Y-Pipe to LH Manifold and Converter Assembly Nut	24-31	18-22
Front Engine Support Mounting Bracket Nut	24-31	18-22

SECTION 310-00 Fuel System — General Information

VEHICLE APPLICATION: Mark VIII

SUBJECT	PAGE
DESCRIPTION AND OPERATION	
Fuel System	310-00-2
DIAGNOSIS AND TESTING	
Fuel System	310-00-3
GENERAL PROCEDURES	
Draining	310-00-4
Hairpin Clip Fittings	310-00-11
Pressure Relief	310-00-3
Push Connect Fittings	310-00-5
Spring Lock Couplings	310-00-8
Vapor Tube Fittings	310-00-14
SPECIFICATIONS	310-00-15

Official Licensed Product
Ford Motor Company

DESCRIPTION AND OPERATION

Fuel System

Component Location

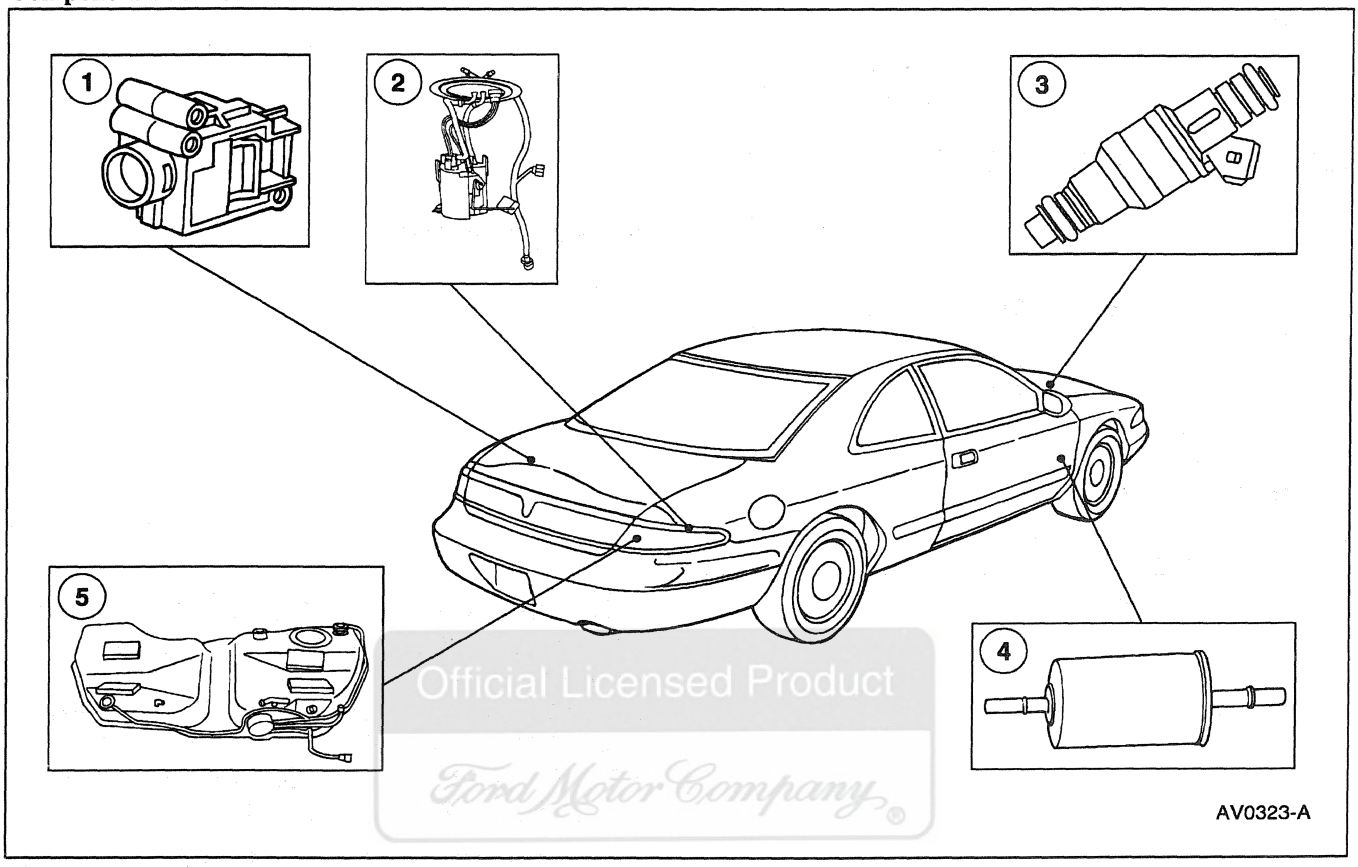

Official Licensed Product
Ford Motor Company

Item	Part Number	Description
1	9341	Inertia Fuel Shutoff Switch
2	9350	Fuel Pump
3	9F593	Fuel Injector

Item	Part Number	Description
4	9155	Fuel Filter
5	9002	Fuel Tank

(Continued)

⚠ WARNING: DO NOT SMOKE OR CARRY LIGHTED TOBACCO OR OPEN FLAME OF ANY TYPE WHEN WORKING ON OR NEAR ANY FUEL-RELATED COMPONENT. HIGHLY FLAMMABLE MIXTURES ARE ALWAYS PRESENT AND MAY BE IGNITED, RESULTING IN POSSIBLE PERSONAL INJURY.

The vehicle:

- is equipped with a multiport fuel injection (MFI) system.
- uses separately controlled fuel injectors (9F593) for each cylinder. The fuel injectors are mounted to the intake manifold.
- fuel injectors are supplied with pressurized fuel from the fuel pump (9350) through the fuel injection supply manifold (9D280).
- the fuel injection supply manifold is equipped with a differential fuel pressure sensor and a fuel temperature sensor.
- fuel flow to the fuel injection supply manifold is controlled by the electronic fuel delivery module which is enabled by the powertrain control module (PCM)(12A650).
- has excess fuel returned to the fuel tank.

DIAGNOSIS AND TESTING

Fuel System

Refer to the Powertrain Control/Emissions Diagnosis Manual [1].

GENERAL PROCEDURES

Pressure Relief

Special Tool(s)

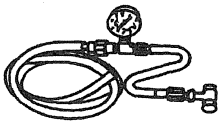 ST1371-A	EFI/CFI Fuel Pressure Gauge 310-012 (T80L-9974-B)

Official Licensed Ford Motor Company

⚠ WARNING: DO NOT SMOKE OR CARRY LIGHTED TOBACCO OR OPEN FLAME OF ANY TYPE WHEN WORKING ON OR NEAR ANY FUEL RELATED COMPONENT. HIGHLY FLAMMABLE MIXTURES ARE ALWAYS PRESENT AND MAY BE IGNITED, RESULTING IN POSSIBLE PERSONAL INJURY.

⚠ WARNING: FUEL IN THE FUEL SYSTEM REMAINS UNDER HIGH PRESSURE EVEN WHEN THE ENGINE IS NOT RUNNING. BEFORE SERVICING OR DISCONNECTING ANY OF THE FUEL LINES OR FUEL SYSTEM COMPONENTS, THE FUEL SYSTEM PRESSURE MUST BE RELIEVED TO PREVENT ACCIDENTAL SPRAYING OF FUEL, CAUSING PERSONAL INJURY OR A FIRE HAZARD.

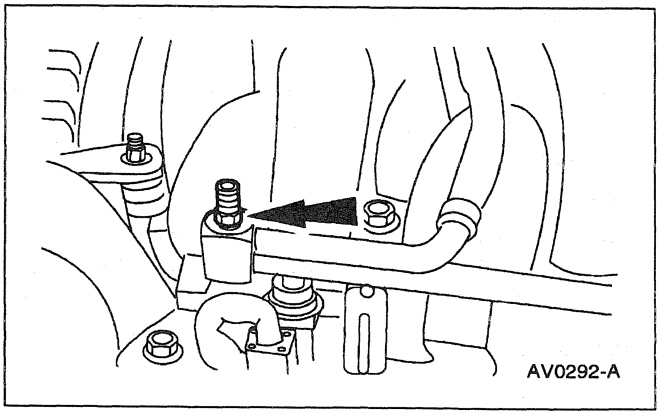

1. Remove the schrader valve cap and install the EFI/CFI Fuel Pressure Gauge.

1 Can be purchased as a separate item.

GENERAL PROCEDURES (Continued)

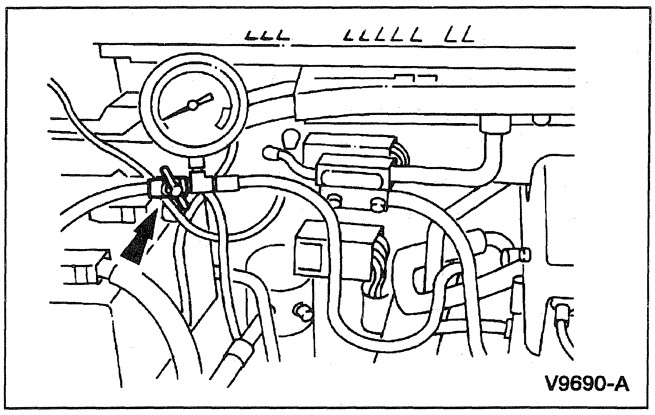
V9690-A

2. Open the manual valve slowly on the EFI/CFI Fuel Pressure Gauge and relieve the fuel pressure.
   - This will drain some fuel out of the system. Place the fuel in a suitable container.

Special Tool(s)

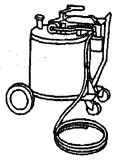 ST1114-A	30 Gallon Gasoline Hand Pump Storage Tanker 164-R3201 or equivalent

Official Licensed Product
Ford Motor Company

Draining

WARNING: ON VEHICLES EQUIPPED WITH AIR SUSPENSION, THE ELECTRICAL POWER SUPPLY TO THE AIR SUSPENSION SYSTEM MUST BE SHUT OFF PRIOR TO HOISTING THE VEHICLE. THIS CAN BE ACCOMPLISHED BY DISCONNECTING THE BATTERY OR TURNING OFF THE AIR SUSPENSION SERVICE SWITCH LOCATED IN THE LUGGAGE COMPARTMENT ON THE LH SIDE. FAILURE TO DO SO MAY RESULT IN UNEXPECTED INFLATION OR DEFLATION OF THE AIR SPRINGS WHICH MAY RESULT IN SHIFTING OF THE VEHICLE DURING THESE OPERATIONS.

WARNING: DO NOT SMOKE, CARRY LIGHTED TOBACCO OR AN OPEN FLAME OF ANY TYPE WHEN WORKING ON OR NEAR ANY FUEL-RELATED COMPONENT. HIGHLY FLAMMABLE MIXTURES ARE ALWAYS PRESENT AND MAY BE IGNITED, RESULTING IN POSSIBLE PERSONAL INJURY.

1. Disconnect the battery ground cable (14301).

2. Raise the vehicle on hoist; refer to Section 100-02.

GENERAL PROCEDURES (Continued)

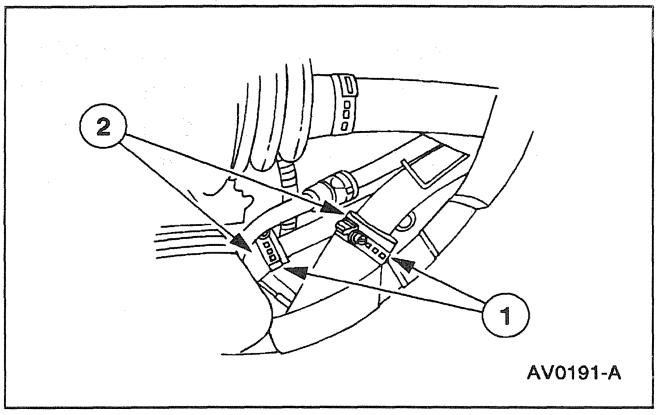

3. **NOTE:** If the tank is over 3/4 full, the fuel must be drained below the 3/4 level. Locate the emission evaporative valve located at the top rear left of the fuel tank. Remove the evaporative emission valve (9B593) and insert a 3/8 inch line from the fuel storage tanker and siphon the fuel below the 3/4 level. Follow the operating instructions of the fuel storage tanker manufacturer.

   Disconnect the fuel tank filler pipe (9034).

   1 Remove the clamps from the fuel tank to filler pipe hose (9047).

   2 Disconnect the fuel tank to filler pipe hose.

4. Use the largest diameter line possible from the fuel storage tanker and insert in the fuel tank filler pipe hose opening in the fuel tank. Siphon the remaining fuel. Follow the operating instructions of the fuel storage tanker manufacturer.

Push Connect Fittings

Official Licensed Product
Motor Company

Special Tool(s)

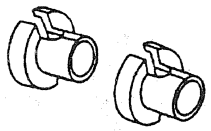 ST1399-A	Fuel Line Disconnect Tool 310-S039 (T90T-9550-S)

GENERAL PROCEDURES (Continued)

Disconnect

WARNING: DO NOT SMOKE OR CARRY LIGHTED TOBACCO OR OPEN FLAME OF ANY TYPE WHEN WORKING ON OR NEAR ANY FUEL RELATED COMPONENT. HIGHLY FLAMMABLE MIXTURES ARE ALWAYS PRESENT AND MAY BE IGNITED, RESULTING IN POSSIBLE PERSONAL INJURY.

WARNING: FUEL IN THE FUEL SYSTEM REMAINS UNDER HIGH PRESSURE EVEN WHEN THE ENGINE IS NOT RUNNING. BEFORE SERVICING OR DISCONNECTING ANY OF THE FUEL LINES OR FUEL SYSTEM COMPONENTS, THE FUEL SYSTEM PRESSURE MUST BE RELIEVED TO PREVENT ACCIDENTAL SPRAYING OF FUEL, CAUSING PERSONAL INJURY OR A FIRE HAZARD.

1. Relieve the fuel pressure; refer to Pressure Relief in this section.
2. Disconnect the safety clip from the male hose.

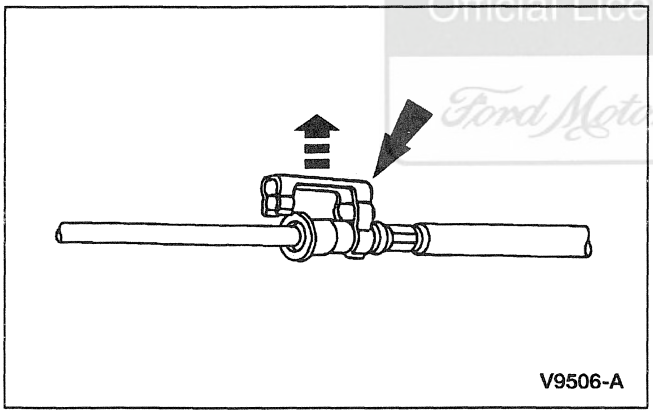
V9506-A

3. Install the fuel line disconnect tool and push into the fitting.

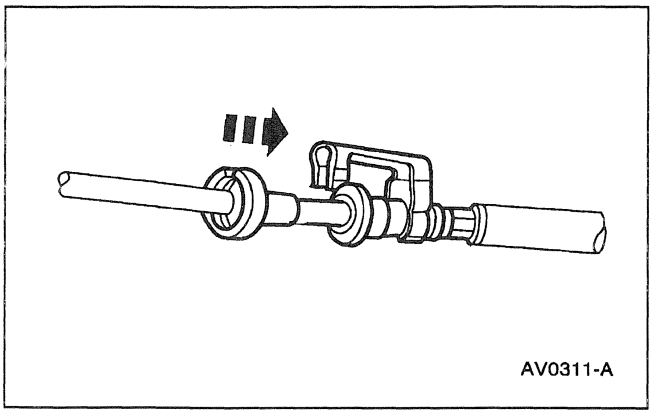
AV0311-A

Official Licensed Product Ford Motor Company

GENERAL PROCEDURES (Continued)

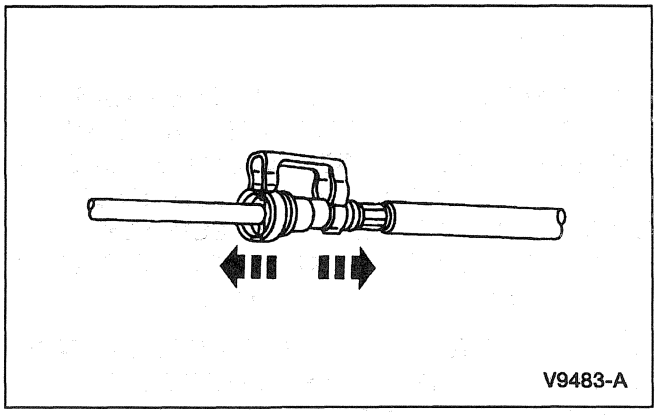
V9483-A

4. Separate the fittings.
   - Inspect for damage.
   - Clean the fittings.

Connect

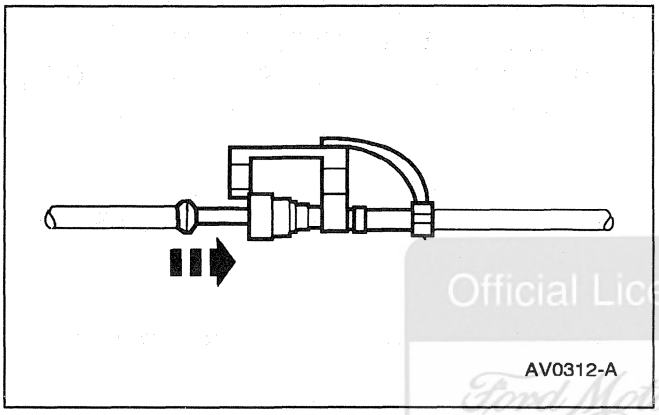
AV0312-A

1. **NOTE:** Lubricate the tube end with clean engine oil meeting Ford specification WSS-M2C153-F to ease assembly.

   Align the tube to the fitting and push until you hear a click.

Official Licensed Product
Ford Motor Company

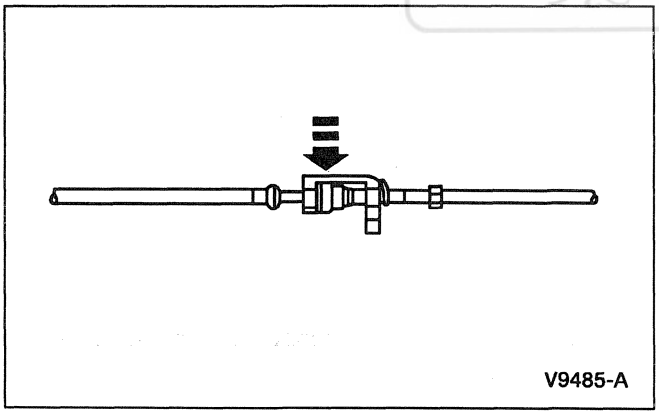
V9485-A

2. Pull on the fitting to make sure it is fully engaged, then install the safety clip.

GENERAL PROCEDURES (Continued)

Spring Lock Couplings

Special Tool(s)

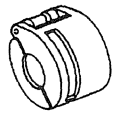 ST1146-A	Disconnect Tool (3/8 inch) 310-D004 (D87L-9280-A) or equivalent
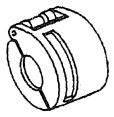 ST1147-A	Disconnect Tool (1/2 inch) 310-D005 (D87L-9280-B) or equivalent

Disconnect

⚠ WARNING: DO NOT SMOKE OR CARRY LIGHTED TOBACCO OR OPEN FLAME OF ANY TYPE WHEN WORKING ON OR NEAR ANY FUEL RELATED COMPONENT. HIGHLY FLAMMABLE MIXTURES ARE ALWAYS PRESENT AND MAY BE IGNITED, RESULTING IN POSSIBLE PERSONAL INJURY.

⚠ WARNING: FUEL IN THE FUEL SYSTEM REMAINS UNDER HIGH PRESSURE EVEN WHEN THE ENGINE IS NOT RUNNING. BEFORE SERVICING OR DISCONNECTING ANY OF THE FUEL LINES OR FUEL SYSTEM COMPONENTS, THE FUEL SYSTEM PRESSURE MUST BE RELIEVED TO PREVENT ACCIDENTAL SPRAYING OF FUEL, CAUSING PERSONAL INJURY OR A FIRE HAZARD.

1. Relieve the fuel pressure; refer to Pressure Relief in this section.

Official Licensed Ford Motor Company

GENERAL PROCEDURES (Continued)

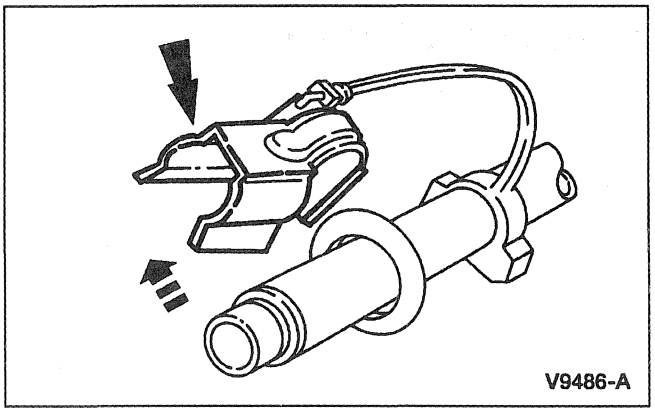
V9486-A

2. Remove the fuel tube clip.

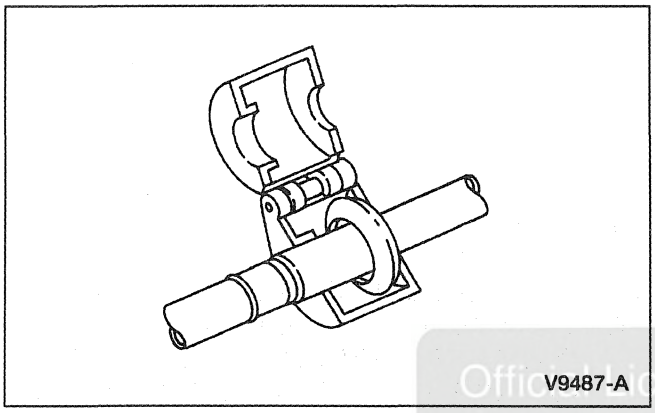
V9487-A

3. Install the Disconnect Tool.

Official Licensed Product
Ford Motor Company

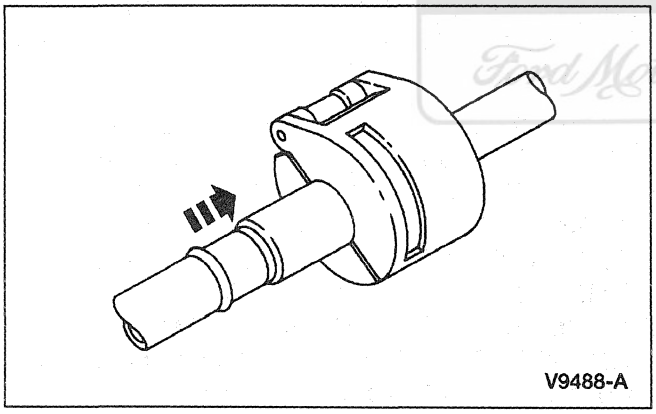
V9488-A

4. Close and push the Disconnect Tool into the open side of the cage.

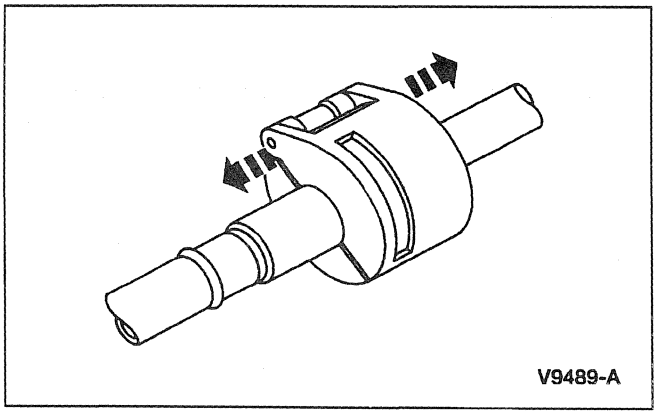
V9489-A

5. Separate the fitting.

GENERAL PROCEDURES (Continued)

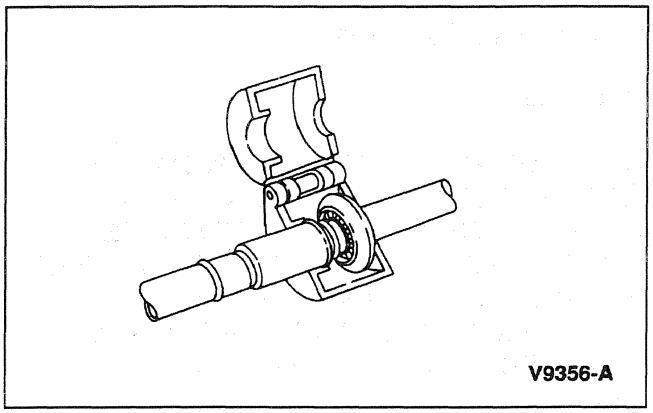

6. Remove the Disconnect Tool.

Connect

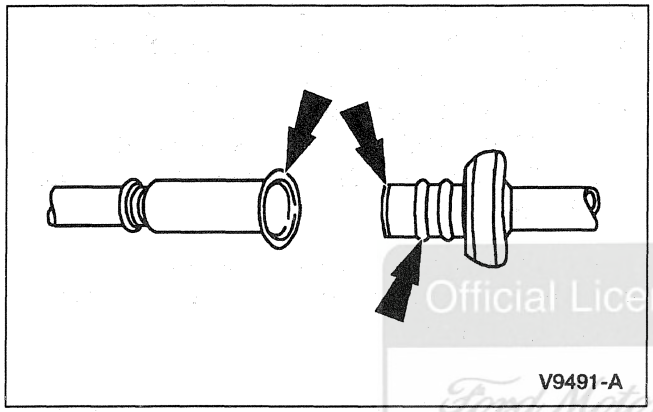

1. Connect the fitting.
   - Inspect and clean both the coupling ends.
   - Lubricate the O-rings with clean engine oil meeting Ford specification WSS-M2C153-F.
   - Connect the fitting.
   - Pull on the fitting to make sure it is fully engaged.
   - Install the safety clip.

Official Licensed Product
Ford Motor Company

GENERAL PROCEDURES (Continued)

Hairpin Clip Fittings

Disconnect

WARNING: DO NOT SMOKE OR CARRY LIGHTED TOBACCO OR OPEN FLAME OF ANY TYPE WHEN WORKING ON OR NEAR ANY FUEL RELATED COMPONENT. HIGHLY FLAMMABLE MIXTURES ARE ALWAYS PRESENT AND MAY BE IGNITED, RESULTING IN POSSIBLE PERSONAL INJURY.

WARNING: FUEL IN THE FUEL SYSTEM REMAINS UNDER HIGH PRESSURE EVEN WHEN THE ENGINE IS NOT RUNNING. BEFORE SERVICING OR DISCONNECTING ANY OF THE FUEL LINES OR FUEL SYSTEM COMPONENTS, THE FUEL SYSTEM PRESSURE MUST BE RELIEVED TO PREVENT ACCIDENTAL SPRAYING OF FUEL, CAUSING POSSIBLE PERSONAL INJURY OR A FIRE HAZARD.

CAUTION: Do not use any tools. The use of tools may cause a deformity in the clip components which may cause fuel leaks.

Official Licensed Ford Motor Company®

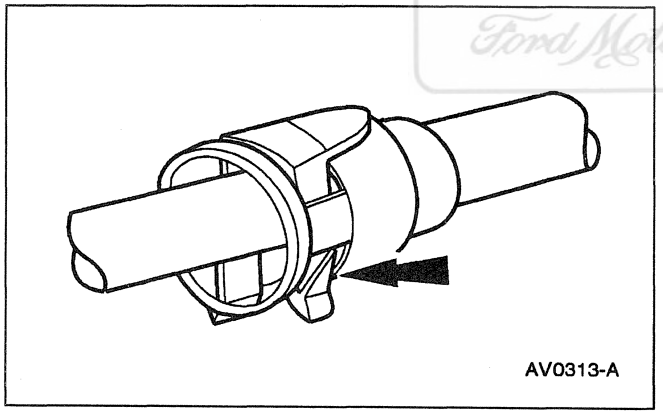

1. Relieve the fuel pressure; refer to Pressure Relief in this section.

2. Remove the shipping tab by bending downward.

GENERAL PROCEDURES (Continued)

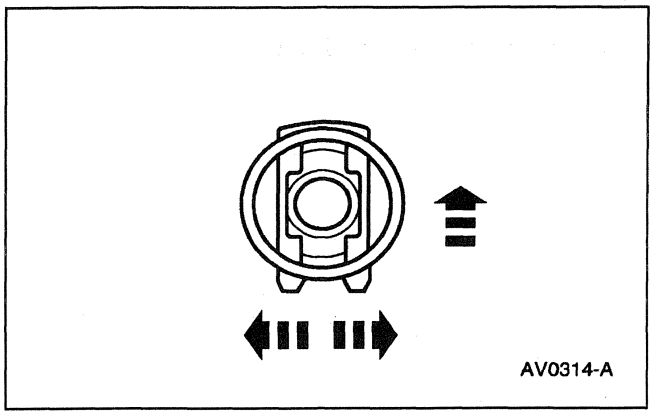

3. Spread the hairpin clip legs and push the clip into the fitting.

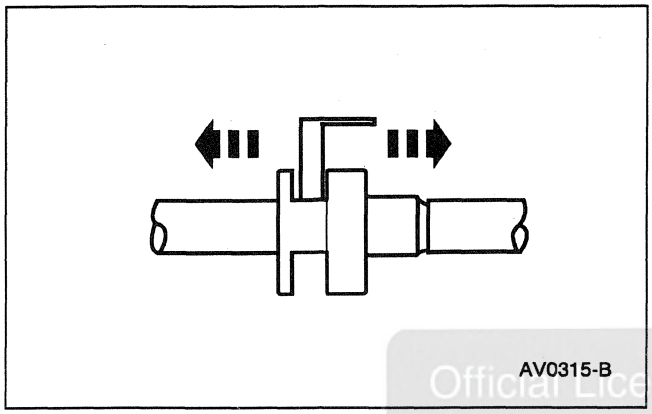

4. Separate the fitting from the tube.

Official Licensed Product
Ford Motor Company

Connect

1. Inspect the fitting and the tube for damage. Remove any dirt or obstructions.
2. Apply a light coat of clean engine oil meeting Ford specification WSS-M2C153-F to the male tube end.

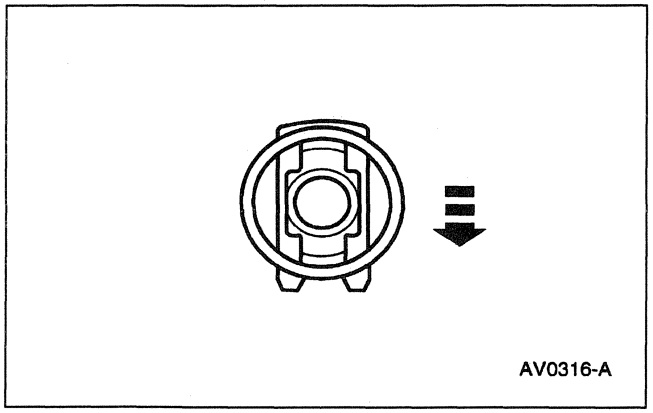

3. Insert the hairpin clip into the fitting.

GENERAL PROCEDURES (Continued)

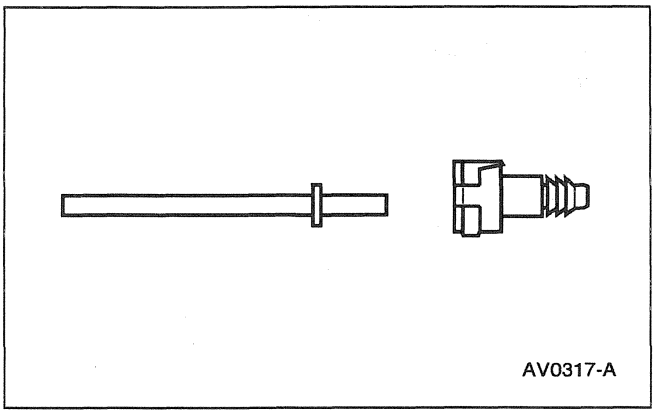

4. Align the tube and the fitting.

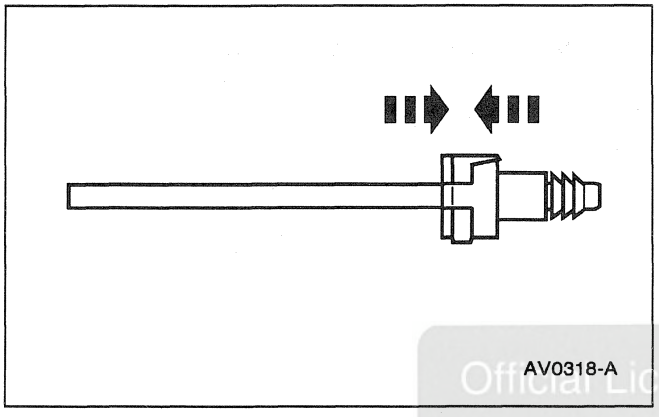

5. Insert the tube in the fitting and push together until a click is heard.

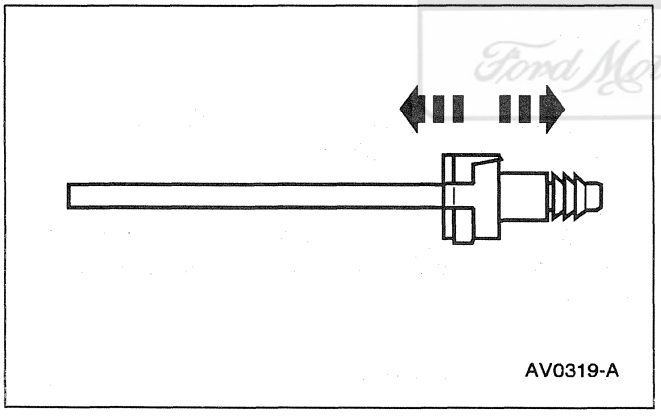

6. Pull on the connection to make sure it is fully engaged.

Official Licensed Product
Ford Motor Company

GENERAL PROCEDURES (Continued)

Vapor Tube Fittings

Disconnect

1. **WARNING: THE EVAPORATIVE EMISSION SYSTEM CONTAINS FUEL VAPOR AND CONDENSED FUEL VAPOR. ALTHOUGH NOT PRESENT IN LARGE QUANTITIES, IT STILL PRESENTS THE DANGER OF EXPLOSION OR FIRE. DISCONNECT THE BATTERY GROUND CABLE FROM THE BATTERY TO MINIMIZE THE POSSIBILITY OF AN ELECTRICAL SPARK OCCURRING, POSSIBLY CAUSING A FIRE OR EXPLOSION IF FUEL VAPOR OR FUEL LIQUID IS PRESENT IN THE AREA.**
   Disconnect the battery ground cable.

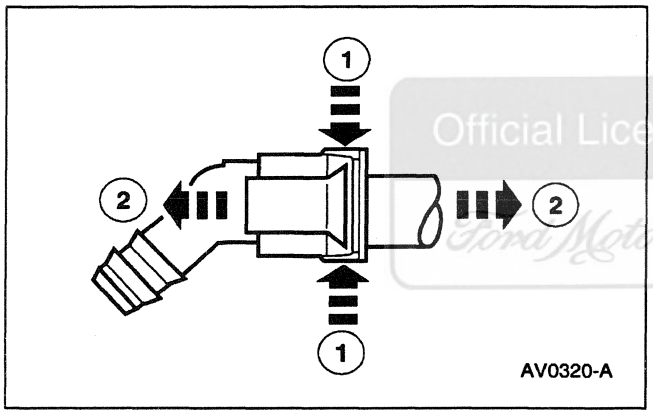

2. Disconnect the vapor tube from the fitting.
   1 Squeeze the fitting.
   2 Disconnect the vapor tube from the fitting.

Official Licensed Product
Ford Motor Company

Connect

1. Inspect the fitting and the tube for damage.
2. Remove any dirt or obstructions.
3. Push the tube into the fitting until it snaps in place.

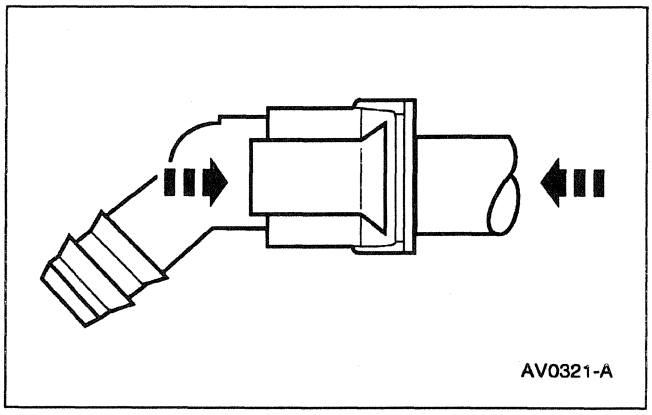

GENERAL PROCEDURES (Continued)

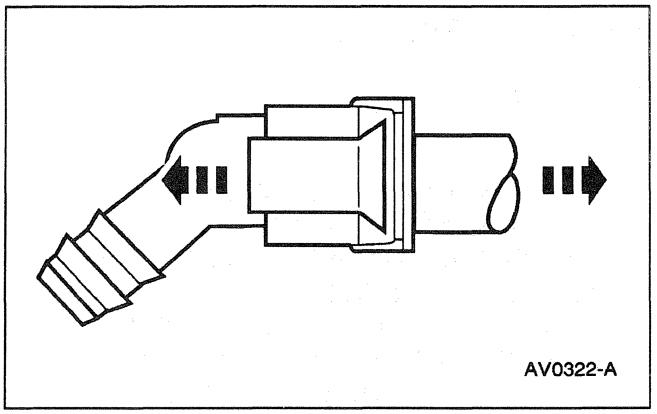

4. Pull on the connection to make sure the fitting is secure.

SPECIFICATIONS

General Specifications

Item	Specification
Engine Running Fuel Pressure	30-45 psi 210-310 kPa
Key On Engine Off Fuel Pressure	35-45 psi 240-310 kPa
Lubricants	
Engine Oil	WSS-M2C153-F

Official Licensed Product
Ford Motor Company

SECTION 310-01 Fuel Tank and Lines

VEHICLE APPLICATION: Mark VIII

SUBJECT	PAGE
DESCRIPTION AND OPERATION	
Fuel Tank and Lines	310-01-2
DIAGNOSIS AND TESTING	
Fuel Tank and Lines	310-01-3
REMOVAL AND INSTALLATION	
Filler Pipe	310-01-8
Filter	310-01-11
Fuel Tank	310-01-3
Inertia Fuel Shutoff (IFS) Switch	310-01-14
Lines	310-01-12
Pump	310-01-6
SPECIFICATIONS	310-01-16

Official Licensed Product
Ford Motor Company

DESCRIPTION AND OPERATION

Fuel Tank and Lines

Component Location

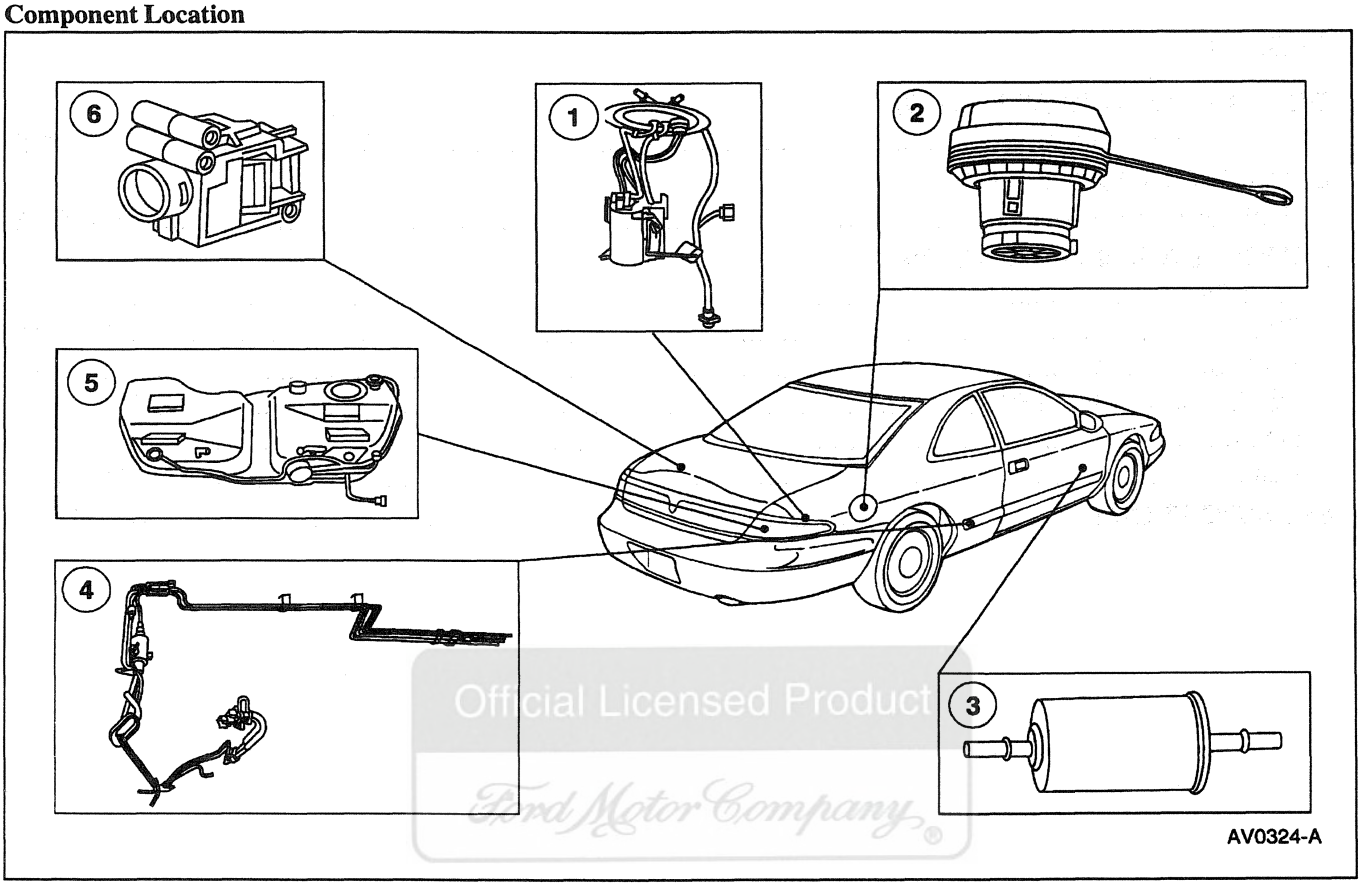

Official Licensed Product
Ford Motor Company

Item	Part Number	Description
1	9350	Fuel Pump
2	9030	Fuel Tank Filler Cap
3	9B072	Fuel Filter and Base

(Continued)

Item	Part Number	Description
4	9S278	Rear Fuel Supply Return and Vapor Tube
5	9002	Fuel Tank
6	9341	Inertia Fuel Shutoff Switch

⚠ WARNING: DO NOT SMOKE, CARRY LIGHTED TOBACCO OR AN OPEN FLAME OF ANY TYPE WHEN WORKING ON OR NEAR ANY FUEL-RELATED COMPONENT. HIGHLY FLAMMABLE MIXTURES ARE ALWAYS PRESENT AND MAY BE IGNITED, RESULTING IN POSSIBLE PERSONAL INJURY.

The a fuel pump (9350) provides pressurized fuel to the engine and contains:

- a flange mount to the fuel tank (9002) and a fuel delivery module which snaps into a retainer integral with the fuel tank.
- a serviceable fuel level sensor (9275).
- an inlet filter.
- a check valve which maintains system pressure after the pump is shut off.
- a pressure relief valve for overpressure protection in the event of restricted flow.

The fuel pump is controlled by an electronic fuel delivery module which is enabled by the powertrain control module (PCM)(12A650). Electrical power to the fuel pump is provided through the inertia fuel shutoff switch (IFS switch)(9341).

DESCRIPTION AND OPERATION (Continued)

Fill limiting is accomplished through the configuration of the vent fittings in the fuel tank. The fill limiting system is to keep fuel out of the evaporative emission valve (9B593) when the vehicle is on grades with a full tank of fuel which has expanded from heating.

DIAGNOSIS AND TESTING

Fuel Tank and Lines

Refer to the Powertrain Control/Emissions Diagnosis Manual [1].

REMOVAL AND INSTALLATION

Fuel Tank

Removal

WARNING: DO NOT SMOKE, CARRY LIGHTED TOBACCO OR AN OPEN FLAME OF ANY TYPE WHEN WORKING ON OR NEAR ANY FUEL-RELATED COMPONENT. HIGHLY FLAMMABLE MIXTURES ARE ALWAYS PRESENT AND MAY BE IGNITED, RESULTING IN POSSIBLE PERSONAL INJURY.

WARNING: FUEL SUPPLY TUBES ON VEHICLES EQUIPPED WITH FUEL INJECTED ENGINES WILL REMAIN PRESSURIZED FOR LONG PERIODS OF TIME AFTER ENGINE SHUTDOWN. FUEL SYSTEM PRESSURE MUST BE RELIEVED TO PREVENT ACCIDENTAL SPRAYING OF FUEL, CAUSING POSSIBLE INJURY OR A FIRE HAZARD.

1. Turn off the air suspension switch.
2. Disconnect the battery ground cable (14301).
3. Relieve the fuel pressure; refer to Section 310-00.
4. Drain the fuel from the vehicle; refer to Section 310-00.
5. Raise and support the vehicle; refer to Section 100-02.

1 Can be purchased as a separate item.

REMOVAL AND INSTALLATION (Continued)

6. Remove the exhaust system; refer to Section 309-00.

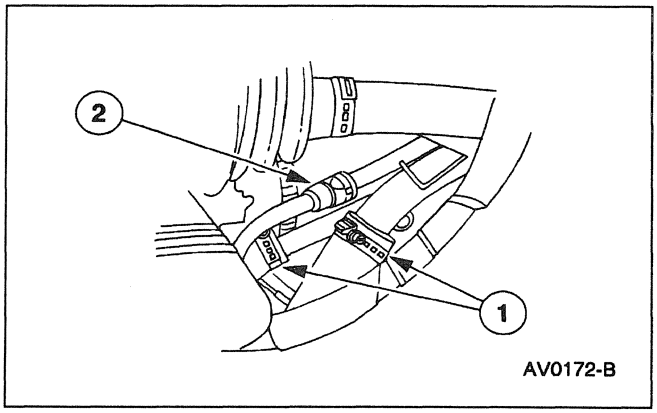

7. Disconnect the fuel tank filler pipe (9034).
   1 Remove the clamps from the fuel tank to filler pipe hose (9047) and disconnect the hose.
   2 Disconnect the hairpin clip fitting from control valve signal jumper line on the fuel tank filler pipe; refer to Section 310-00.

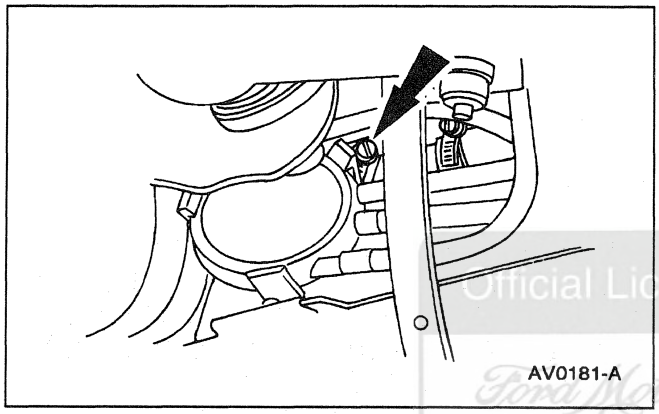

8. Loosen the clamp and disconnect the control valve signal jumper from the fuel tank filler pipe signal line.

Official Licensed Product
Ford Motor Company

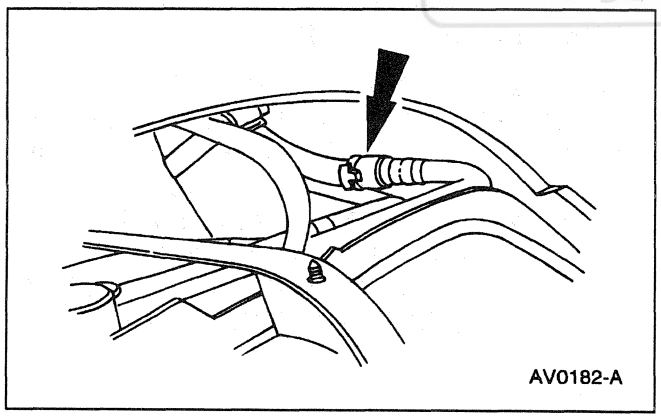

9. Disconnect the hairpin clip fitting from the control valve vapor jumper from the fuel tank vapor outlet tube near the body rail; refer to Section 310-00.

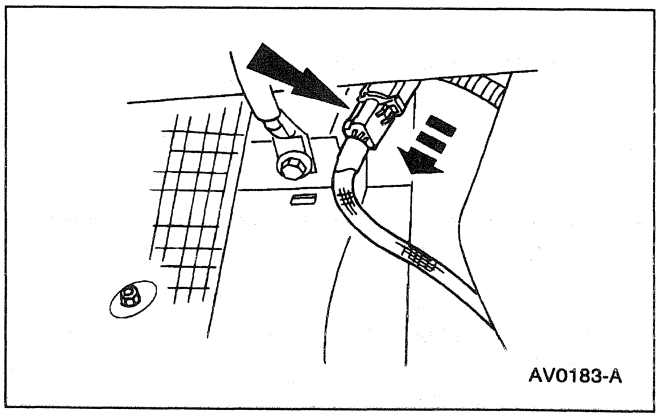

10. Disconnect the fuel tank electrical connector.

REMOVAL AND INSTALLATION (Continued)

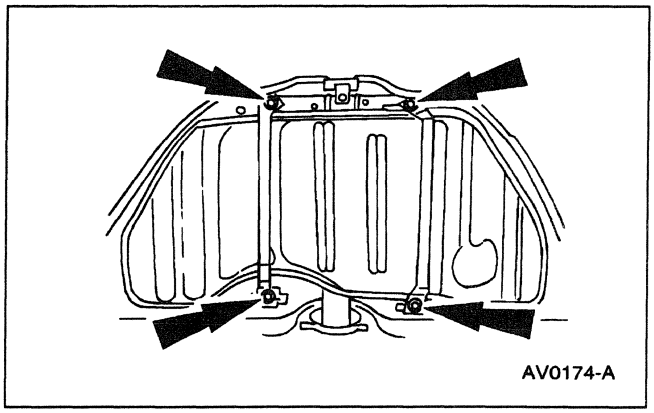
AV0174-A

11. **NOTE:** Support the fuel tank with a high-lift jack.
    Remove the retaining bolts from the fuel tank support straps (9092).

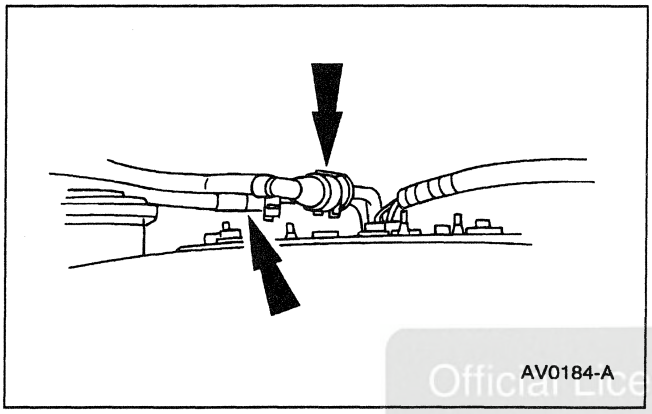
AV0184-A

12. **NOTE:** The fuel tank must be lowered slightly to remove components above fuel tank.
    Disconnect the fuel lines from the fuel pump (9350); refer to the Lines procedure in this section.

Official Licensed Product
Ford Motor Company

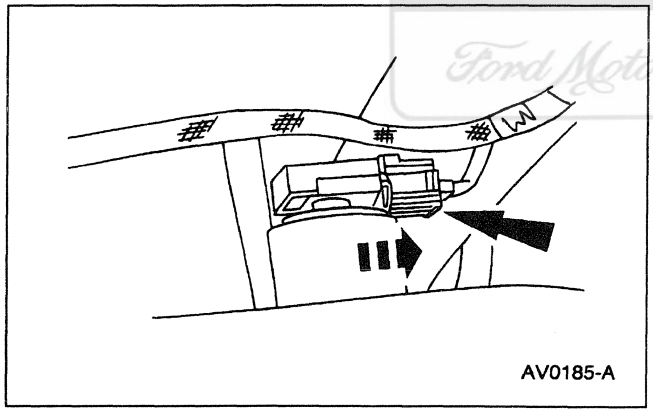
AV0185-A

13. Disconnect the fuel pressure sensor connector.

Installation

1. Follow the removal procedure in reverse order.

REMOVAL AND INSTALLATION (Continued)

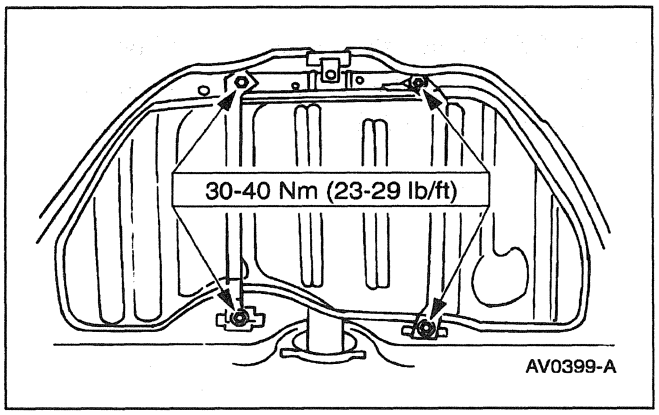

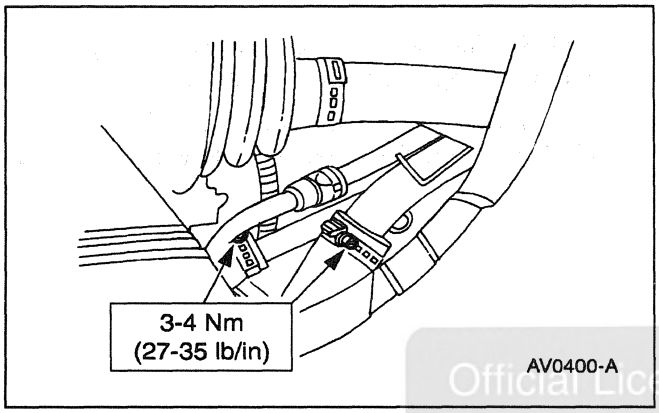

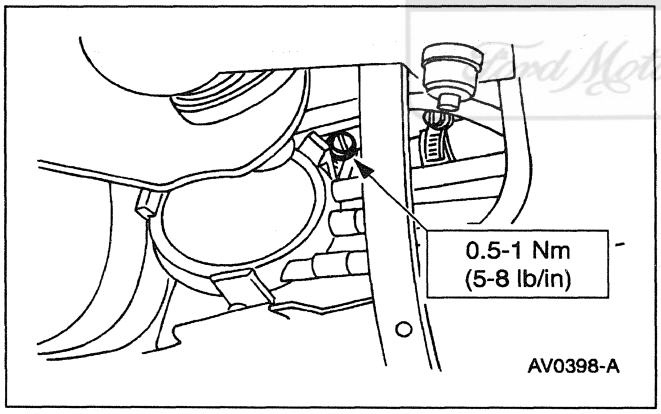

Official Licensed Product
Ford Motor Company

2. Start the engine and check for leaks.

Pump

Removal

1. Remove the fuel tank (9002); refer to the Fuel Tank procedure in this section.

2. Clean the area around the fuel pump mounting flange.

REMOVAL AND INSTALLATION (Continued)

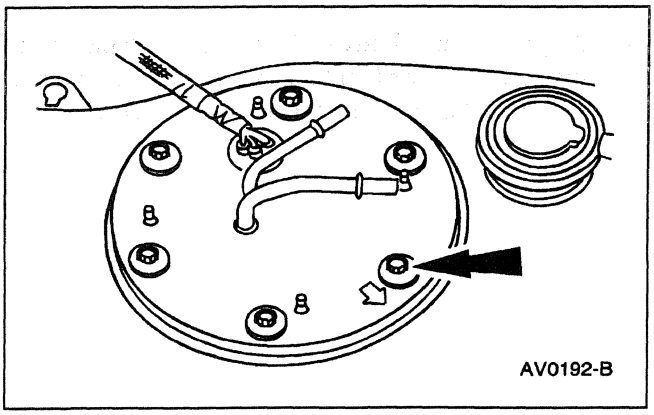

3. Remove the bolts.

4. Lift the top flange plate so the fuel pump locking tabs are accessible through the fuel pump opening.

5. ⚠ **CAUTION: Handle the fuel pump carefully to prevent damage to the float arm and filter.**

   Reach into the tank, squeeze the tabs together and remove the fuel pump (9350).

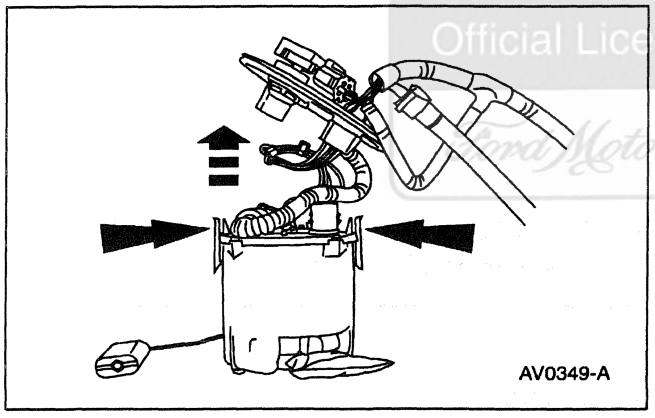

6. Remove and discard the fuel pump mounting gasket (9417).

Official Licensed Product
Ford Motor Company

Installation

1. Clean the fuel pump mounting flange and the fuel tank mounting surface.

2. Install the fuel pump mounting gasket.

REMOVAL AND INSTALLATION (Continued)

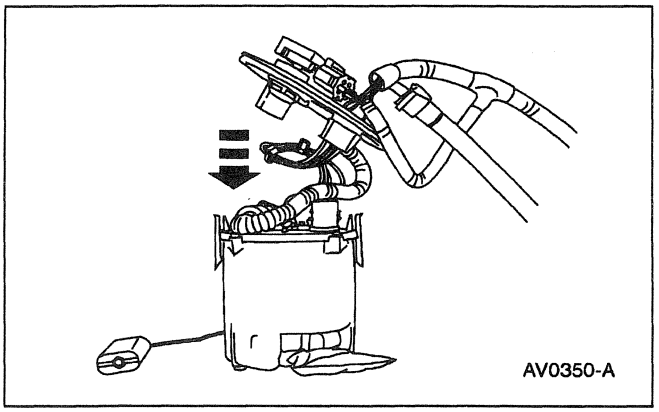

3. Align the pump body with the retainer located on the bottom of the fuel tank and push the fuel pump into the retainer until two clicks are heard.

4. Pull on the fuel pump to make sure it is seated securely.

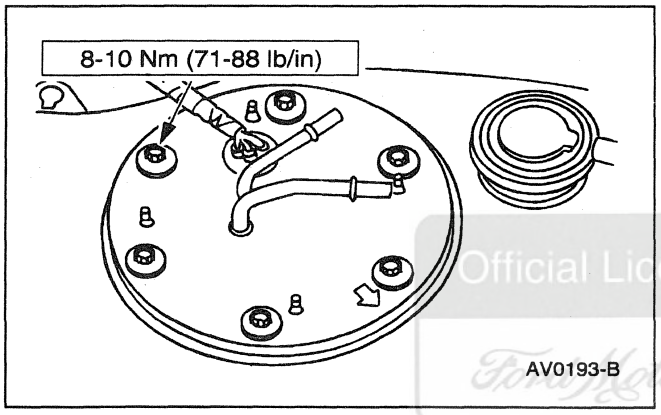

5. Position the top flange and install the bolts.

Official Licensed Product
Ford Motor Company

6. Install the fuel tank; refer to the Fuel Tank procedure in this section.

Filler Pipe

Removal

1. Turn off the air suspension switch.

2. Disconnect the battery ground cable (14301).

3. Remove the fuel tank filler cap (9030).

REMOVAL AND INSTALLATION (Continued)

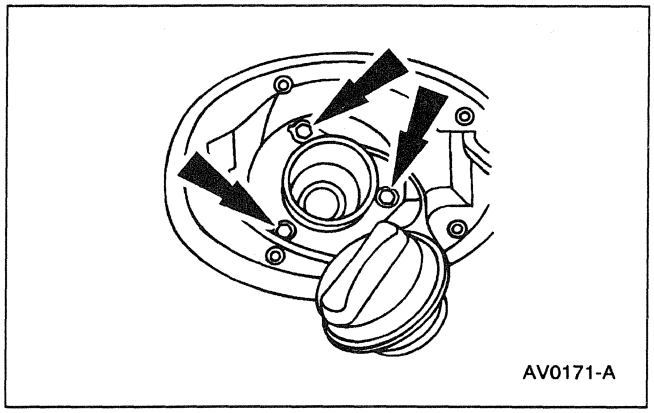
AV0171-A

4. Remove the screws.

5. Raise and support the vehicle; refer to Section 100-02.

6. Drain the fuel from the fuel tank; refer to Section 310-00.

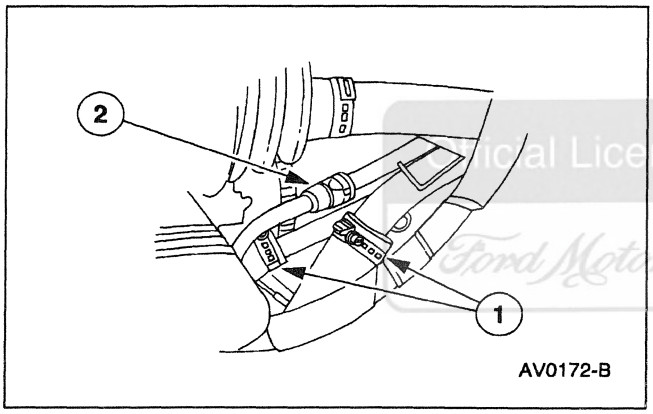

AV0172-B

7. Disconnect the fuel tank filler pipe (9034) and the fuel hose.
   1 Remove the clamp from fuel tank to filler pipe hose (9047) and disconnect the hose.
   2 Disconnect the hairpin clip fitting from the control valve signal jumper line on the fuel tank filler pipe; refer to Section 310-00.

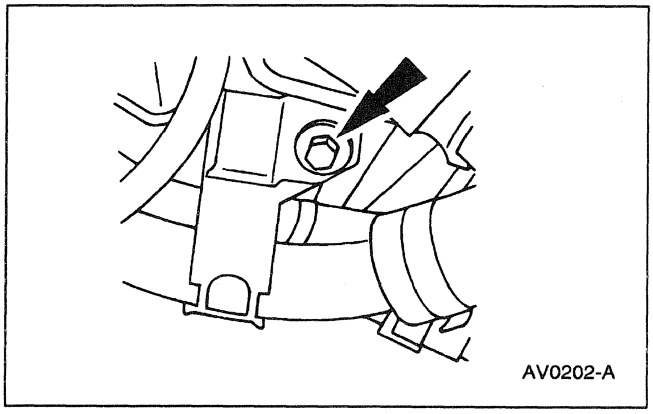
AV0202-A

8. Remove the bolt.

9. Remove the fuel tank filler pipe.

REMOVAL AND INSTALLATION (Continued)

Installation

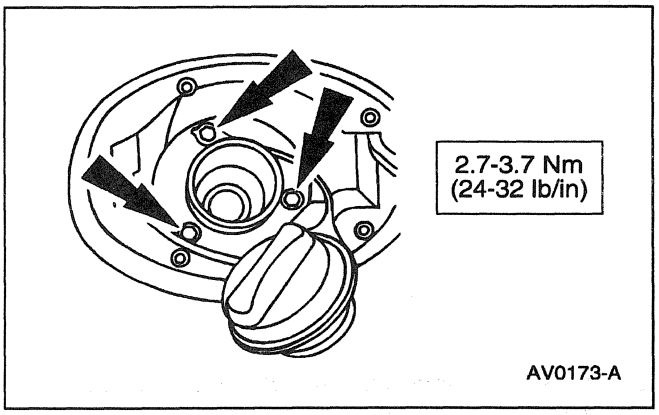

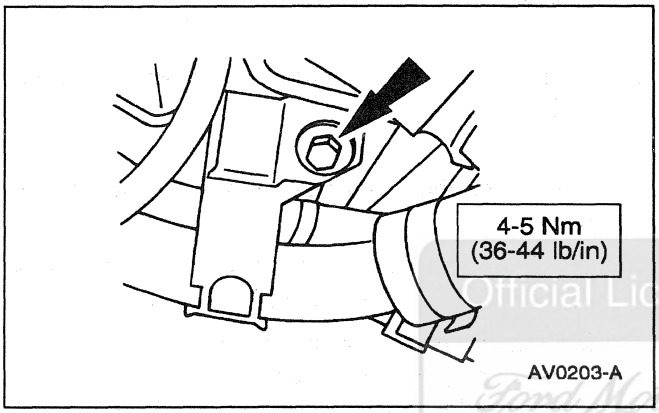

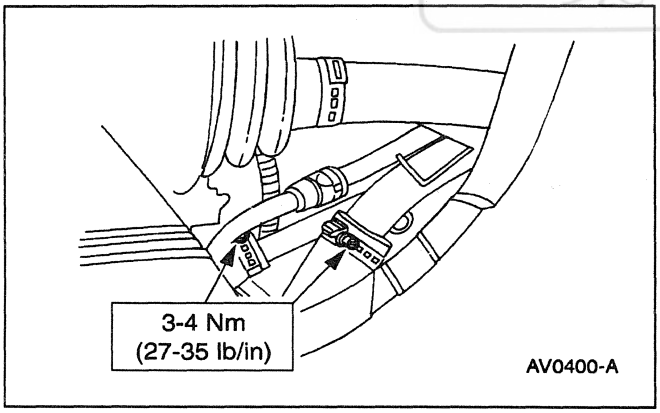

1. Follow the removal procedure in reverse order.

Official Licensed Product
Ford Motor Company

REMOVAL AND INSTALLATION (Continued)

Filter

Removal

1. **WARNING: DO NOT SMOKE OR CARRY LIGHTED TOBACCO OR OPEN FLAME OF ANY TYPE WHEN WORKING ON OR NEAR ANY FUEL RELATED COMPONENT. HIGHLY FLAMMABLE MIXTURES ARE ALWAYS PRESENT AND MAY BE IGNITED, RESULTING IN POSSIBLE PERSONAL INJURY.**

   WARNING: FUEL IN THE FUEL SYSTEM REMAINS UNDER HIGH PRESSURE EVEN WHEN THE ENGINE IS NOT RUNNING. BEFORE SERVICING OR DISCONNECTING ANY OF THE FUEL LINES OR FUEL SYSTEM COMPONENTS, THE FUEL SYSTEM PRESSURE MUST BE RELIEVED TO PREVENT ACCIDENTAL SPRAYING OF FUEL, CAUSING PERSONAL INJURY OR A FIRE HAZARD.

   Relieve the fuel system pressure; refer to Section 310-00.

Official Licensed Product
Ford Motor Company

2. Turn off the air suspension switch.

3. Raise and support the vehicle; refer to Section 100-02.

4. Remove the front fender splash shield (16102).

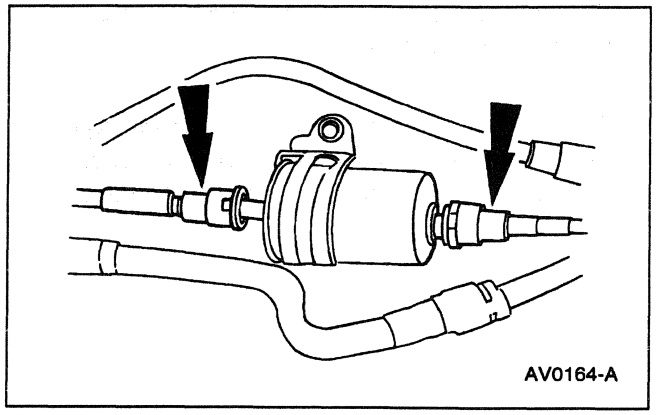

5. Disconnect the spring lock couplings from the fuel lines at the fuel filter and base (9B072); refer to Section 310-00.

REMOVAL AND INSTALLATION (Continued)

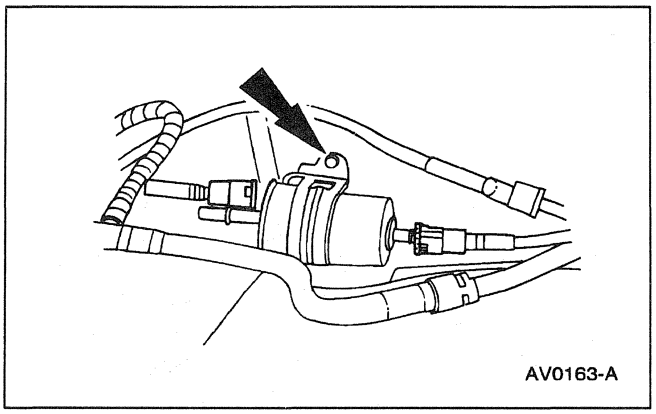

6. Remove the screw and the fuel filter and base.

Installation

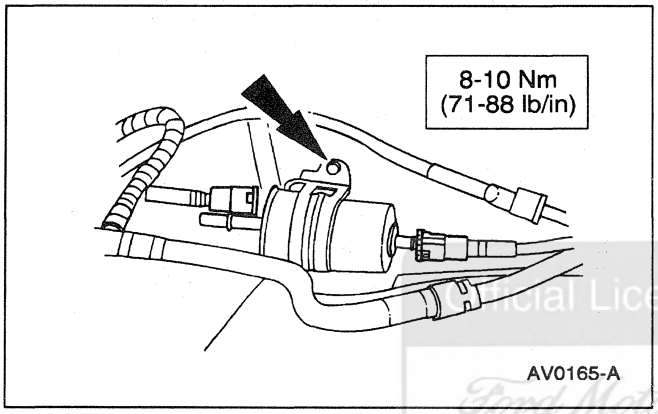

1. Follow the removal procedure in reverse order.

Official Licensed Product
Ford Motor Company

Lines

Removal

1. Remove the fuel tank; refer to the Fuel Tank procedure in this section.

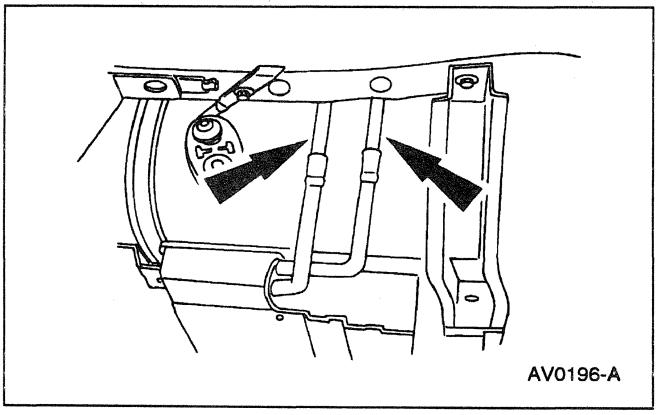

2. Disconnect the vapor tube fitting from the vapor line from the rear fuel supply return and vapor tube (9S278) at RH side of tank; refer to Section 310-00.

REMOVAL AND INSTALLATION (Continued)

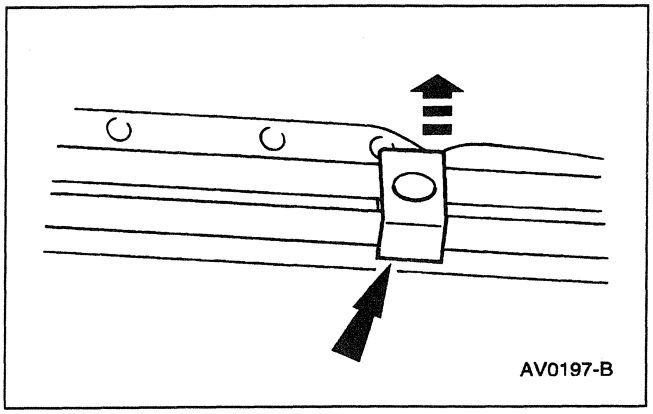

3. Remove the vapor lines clip from the body near the evaporative emission canister bracket.

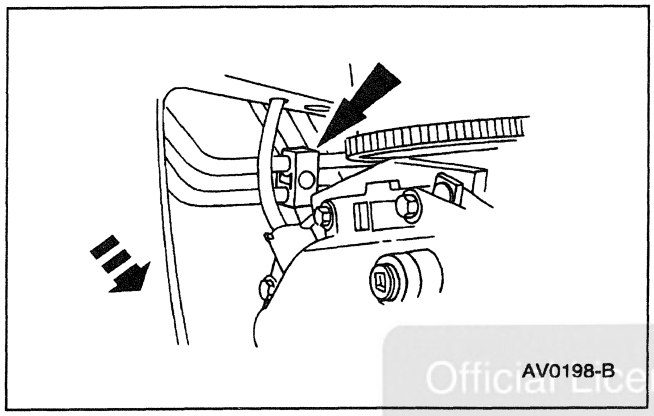

4. Remove the vapor lines clip from the body above the differential housing.

Official Licensed Product
Ford Motor Company

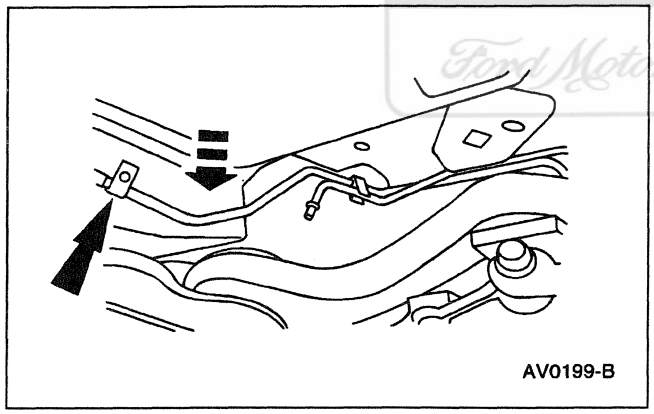

5. Remove the vapor line clip from the rail at the RH side of the tank.

6. Remove the front fender splash shield (16102).

7. Disconnect the vapor tube fittings from the rear fuel supply return and vapor tube at the RH front wheel well; refer to Section 310-00.

REMOVAL AND INSTALLATION (Continued)

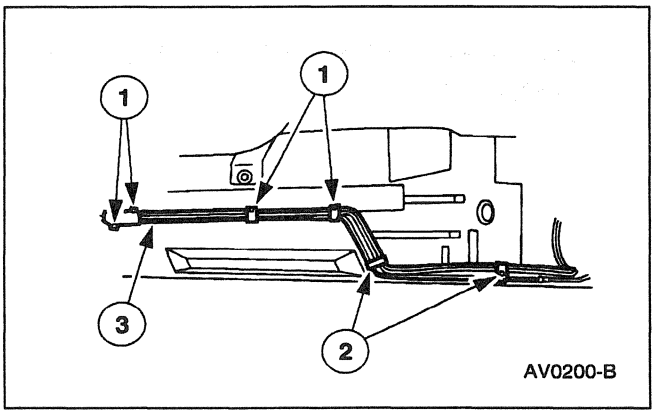

8. Remove the rear fuel supply return and vapor tube.
   1 Remove the bolts.
   2 Remove the fuel line clip.
   3 Remove the fuel lines.

Installation

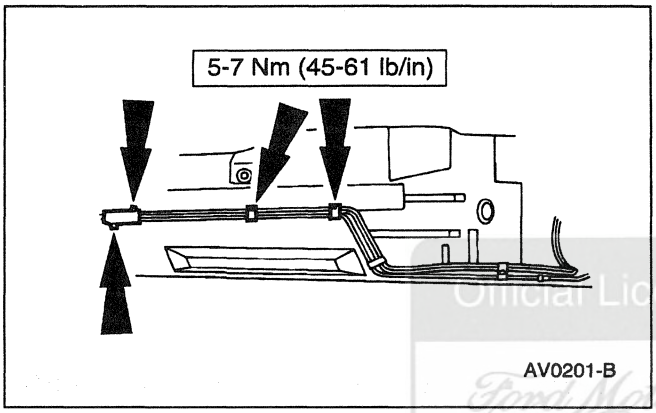

1. Follow the removal procedure in reverse order.

Official Licensed Product
Ford Motor Company

2. Use a new rivet on the rear clip.

Inertia Fuel Shutoff (IFS) Switch

Removal

1. Open the luggage compartment door (40110).

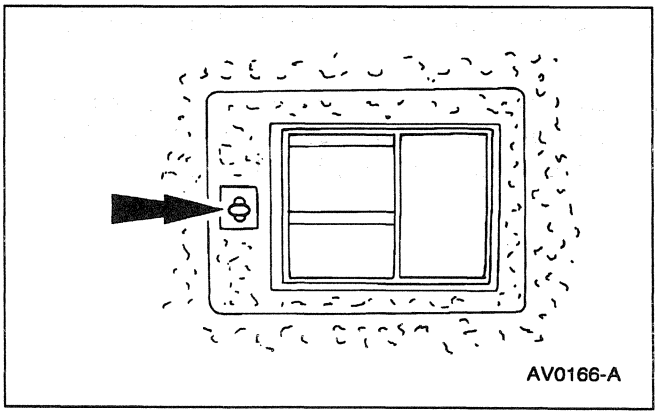

2. Open the inertia fuel shutoff switch panel.

REMOVAL AND INSTALLATION (Continued)

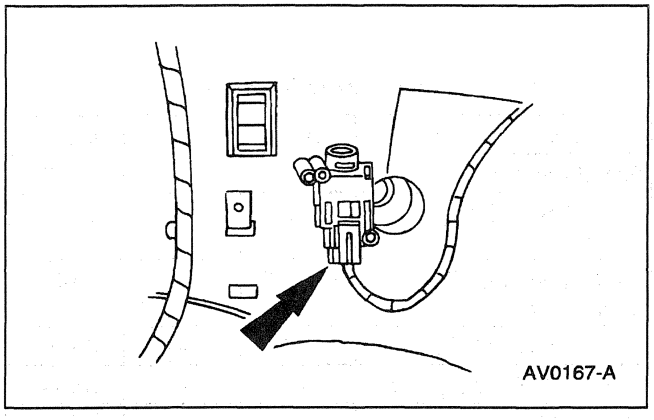

3. Disconnect the connector.

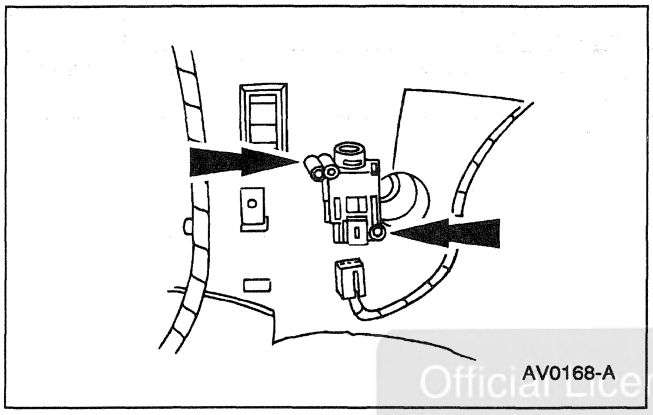

4. Remove the screws and the inertia fuel shutoff switch (IFS switch)(9341).

Official Licensed Product
Ford Motor Company

Installation

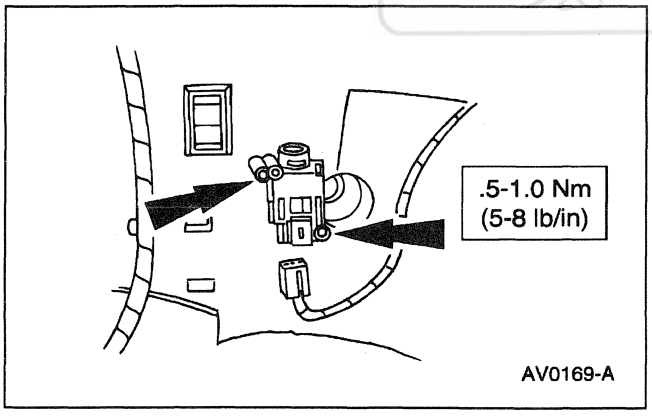

1. Follow the removal procedure in reverse order.

SPECIFICATIONS

General Specifications

Item	Specification
Fuel Tank L(gal)	68.1 (18.0)
Engine Running kPa (psi)	193-310 (28-45)
Key On Engine Off kPa (psi)	240-310 (35-45)

Torque Specifications

Description	Nm	Lb/Ft	Lb/In
Fuel Filter Bracket Screw	8-10	—	71-88
Fuel Tank Strap Bolt	30-40	23-29	—

(Continued)

Torque Specifications

Description	Nm	Lb/Ft	Lb/In
Fuel Pump Bolts	8-10	—	71-88
Filler Pipe-to-Body Screws	2.7-3.7	—	24-32
Inertia Fuel Shutoff Switch Screws	0.5-1.0	—	5-8
Rear Fuel Line Screws	5-7	—	45-61
Fuel Tank Filler Pipe Bolt	4-5	—	36-44
Control Valve Signal Jumper Clamp	0.5-1.0	—	5-8
Fuel Tank Filler Hose Clamp	3-4	—	27-35

Official Licensed Product
Ford Motor Company

SECTION 310-02 Acceleration Control

VEHICLE APPLICATION: Mark VIII

SUBJECT	PAGE
DESCRIPTION AND OPERATION	
Acceleration Control	310-02-2
DIAGNOSIS AND TESTING	
Acceleration Control	310-02-3
Inspection and Verification	310-02-3
Symptom Chart	310-02-3
REMOVAL AND INSTALLATION	
Cable	310-02-5
Cable Bracket	310-02-6
Pedal and Shaft	310-02-4
SPECIFICATIONS	310-02-8

Official Licensed Product
Ford Motor Company

DESCRIPTION AND OPERATION

Acceleration Control

Component Location

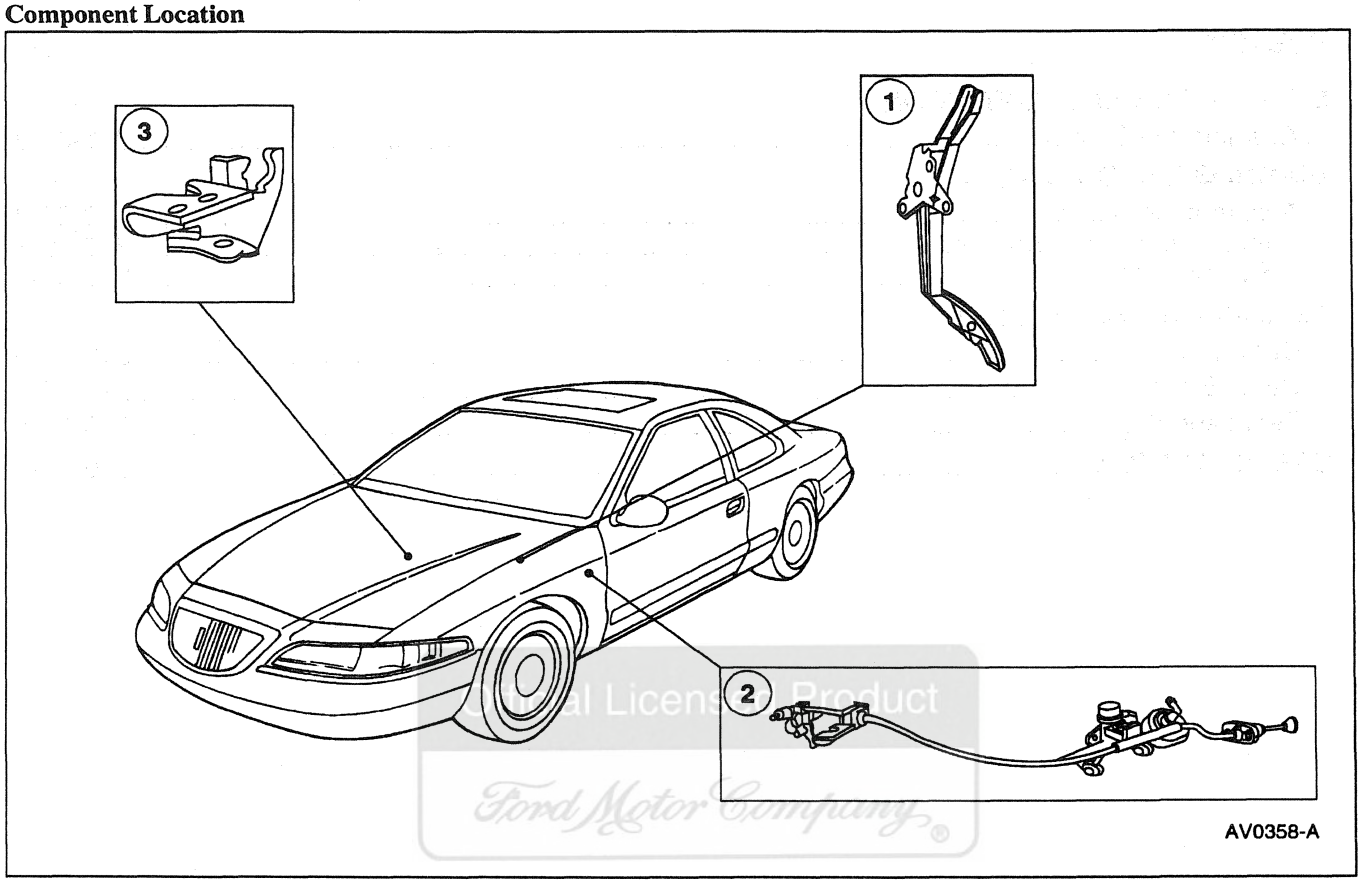

Item	Part Number	Description
1	9723	Accelerator Cable Bracket
2	9725	Accelerator Pedal and Shaft
3	9723	Accelerator Cable Bracket

The throttle is controlled by an accelerator cable (9A758) and an accelerator pedal and shaft (9725). Note the following when repairing this system:

- The accelerator pedal and shaft must travel smoothly from an idle to wide open throttle (WOT) position.
- Hesitation on return and/or prevention of return to idle position must not occur throughout the total travel of the accelerator pedal and shaft.
- Surrounding components such as wiring, hoses, sound insulator and floor covering must not contact the sliding inner member of the accelerator cable or the accelerator pedal and shaft.
- The accelerator cable is not adjustable for free play and distance of travel.
- Do not lubricate or attempt to repair the sliding inner member of the accelerator cable.

DIAGNOSIS AND TESTING

Acceleration Control

Inspection and Verification

1. Verify the customer's concern by operating the acceleration control system to duplicate the condition.
2. Inspect to determine if any of the following mechanical concerns apply.

Visual Inspection Chart

Mechanical
• Damaged accelerator pedal and shaft. • Damaged linkage. • Damaged accelerator cable. • High engine idle speed. • Damaged throttle body.

3. If the inspection reveals an obvious concern that can be readily identified, repair it as required.
4. If the concern remains after the inspection, determine the symptom(s) and go to the Symptom Chart.

Symptom Chart

SYMPTOM CHART

Condition	Possible Source	Action
• Excessive Effort Needed to Depress the Accelerator Pedal and Shaft	• Worn accelerator lever pivot bushing. • Accelerator cable binding. • Worn or damaged throttle body.	• REPLACE the accelerator pedal and shaft. • REPLACE the accelerator cable. • REPLACE throttle body; REFER to Section 303-04.
• The Accelerator Pedal and Shaft Feels Rough or Raspy	• Frayed or binding accelerator cable. • Worn or damaged throttle body.	• REPLACE the accelerator cable. • REPLACE the throttle body; REFER to Section 303-04.
• The Accelerator Pedal and Shaft Bind or Stick	• Kinked accelerator cable. • Foreign object caught in the accelerator pedal linkage. • Worn or damaged throttle body.	• REPLACE accelerator cable. • CHECK the accelerator pedal linkage. • REPLACE the throttle body; REFER to Section 303-04.
• High Engine Idle Speed	• Kinked accelerator cable. • Foreign object caught in the accelerator pedal linkage. • Incorrect engine idle speed.	• REPLACE the accelerator cable. • CHECK the accelerator pedal linkage. • REFER to the Powertrain Control/Emissions Diagnosis Manual [1], for diagnosis and testing of the idle control system.

Official Licensed Product Ford Motor Company

1 Can be purchased as a separate item.

REMOVAL AND INSTALLATION

Pedal and Shaft

Removal

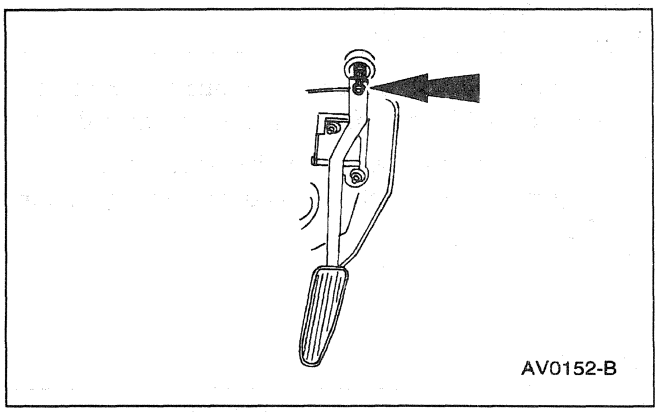

1. Remove the accelerator cable from the accelerator pedal and shaft (9725).

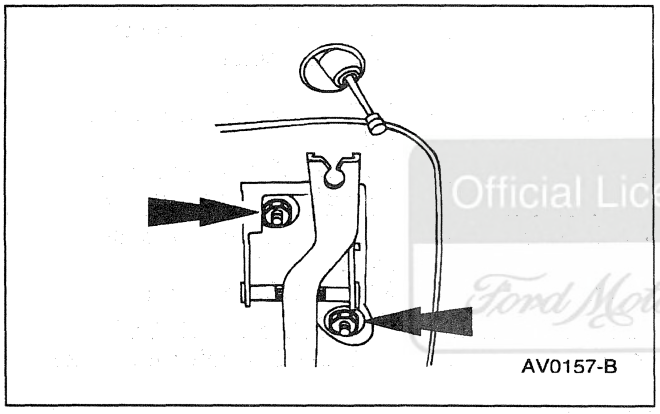

2. Remove the nuts.

Official Licensed Product
Ford Motor Company

Installation

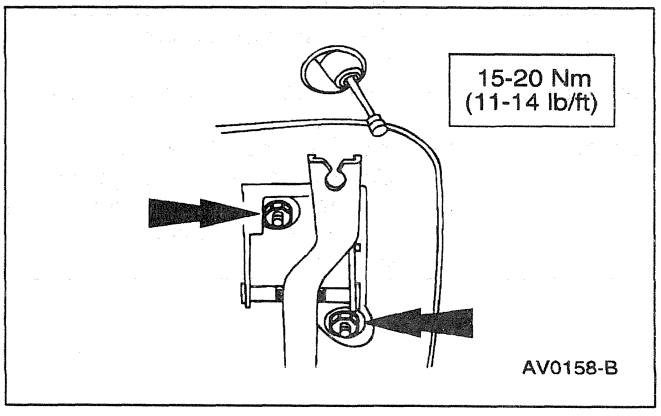

1. Follow the removal procedure in reverse order.

REMOVAL AND INSTALLATION (Continued)

Cable

Removal

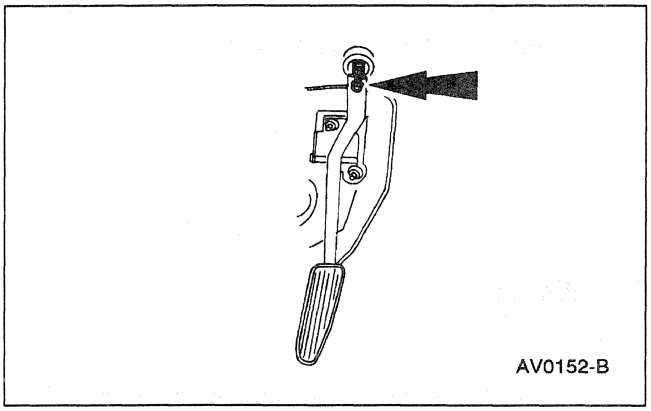

1. Remove the accelerator cable from the accelerator pedal and shaft arm.

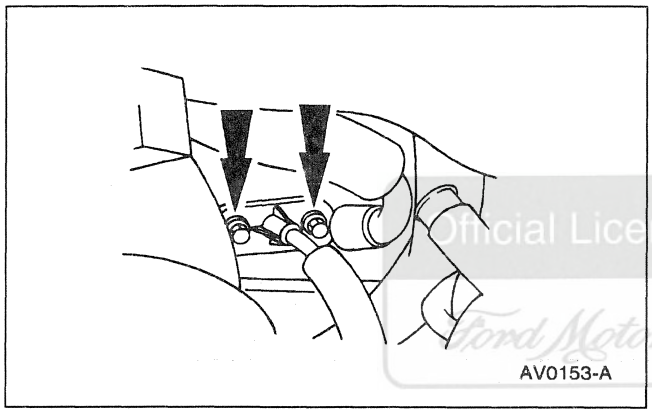

2. Remove the bolts.

Official Licensed Product
Ford Motor Company

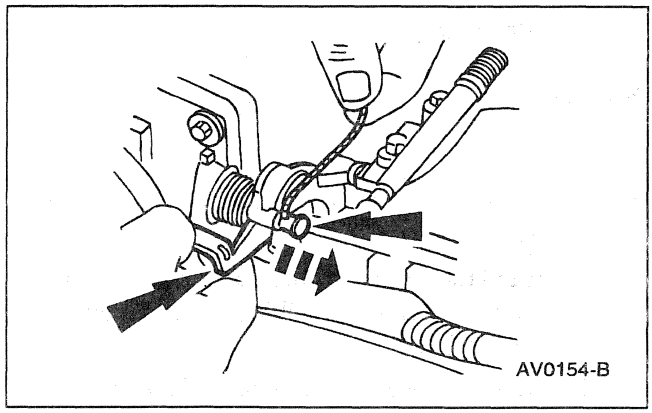

3. Pull the throttle to open position and remove the accelerator cable (9A758) from the throttle body (9E926).

REMOVAL AND INSTALLATION (Continued)

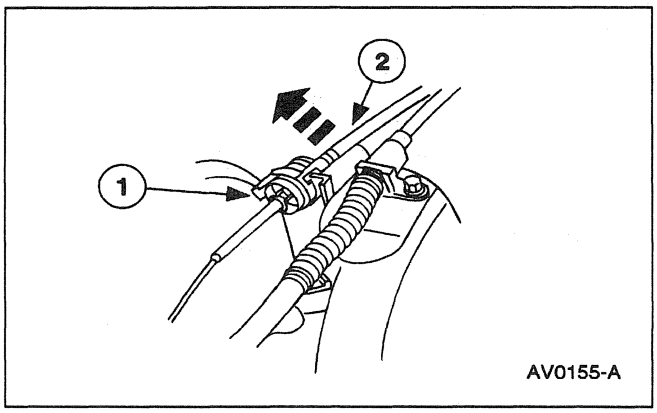

4. Disconnect the accelerator cable at the bracket.
   1 Hand turn the snap connection on the cable counterclockwise until it snaps loose and rotates freely.
   2 Remove the accelerator cable.

Installation

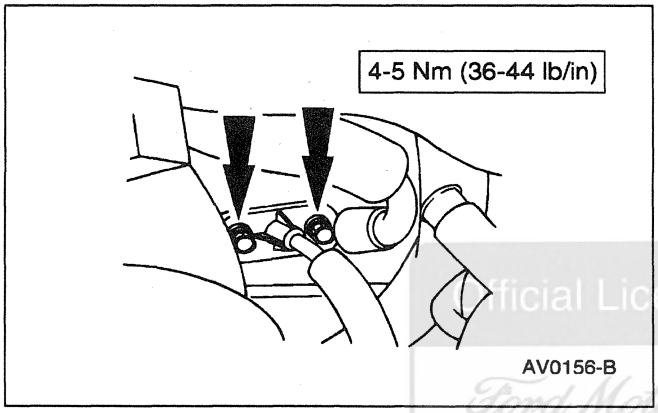

1. Follow the removal procedure in reverse order.

Official Licensed Product
Ford Motor Company

Cable Bracket

Removal

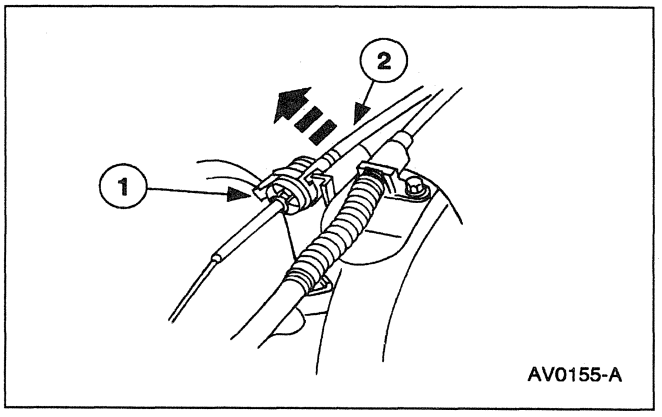

1. Disconnect the accelerator cable (9A758) at the bracket.
   1 Hand turn the snap connections on the cable counterclockwise until it snaps loose and rotates freely.
   2 Remove the accelerator cable from the bracket.

REMOVAL AND INSTALLATION (Continued)

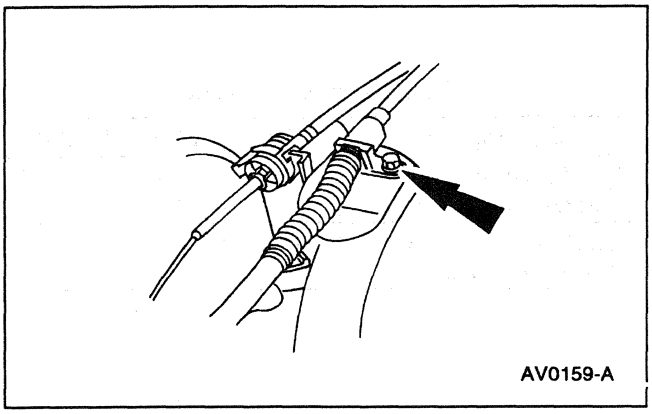

2. Remove the screw.

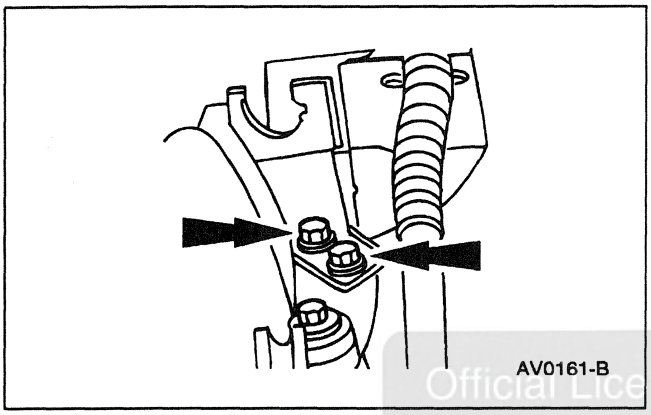

3. Remove the bolts.

Official Licensed Product
Ford Motor Company

Installation

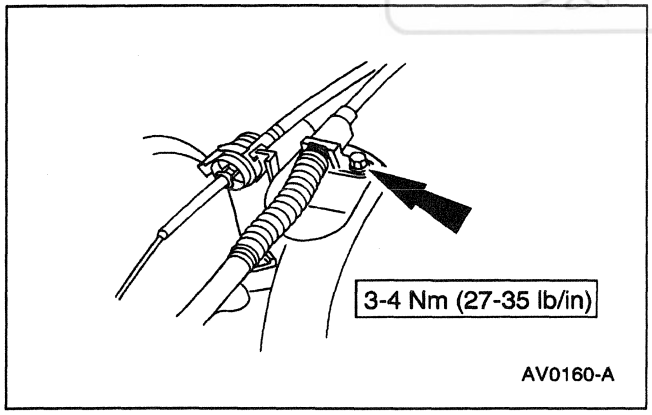

1. Follow the removal procedure in reverse order.

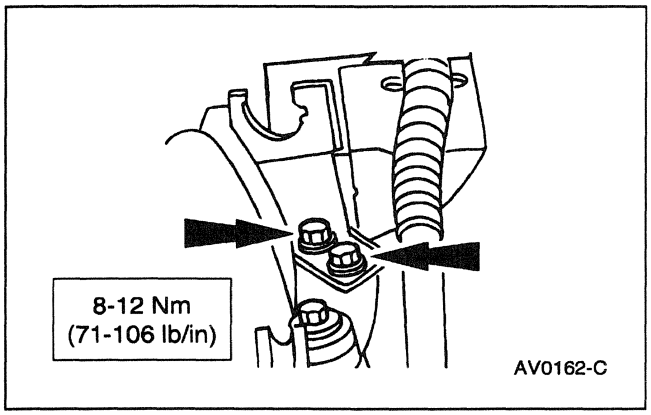

SPECIFICATIONS

Torque Specifications

Description	Nm	Lb/Ft	Lb/In
Accelerator Cable Bracket to Engine Bolt	8-12	—	71-106
Accelerator Pedal and Shaft to Dash Nut	15-20	11-14	—

(Continued)

Torque Specifications

Description	Nm	Lb/Ft	Lb/In
Speed Control Cable Bracket Screw	3-4	—	27-35
Accelerator Cable to Dash Panel Bolts	4-5	—	36-44

Official Licensed Product
Ford Motor Company

SECTION 310-03 Vehicle Speed Control

VEHICLE APPLICATION: Mark VIII

SUBJECT	PAGE
DESCRIPTION AND OPERATION	
Vehicle Speed Control	310-03-2
DIAGNOSIS AND TESTING	
Vehicle Speed Control	310-03-3
Inspection and Verification	310-03-3
Pinpoint Tests	310-03-6
Self-Test Diagnostics	310-03-4
Symptom Chart	310-03-4
REMOVAL AND INSTALLATION	
Actuator — Speed Control Servo	310-03-22
Actuator Cable — Speed Control	310-03-21
Switch — Deactivator	310-03-28
Switch — Speed Control Actuator	310-03-26
GENERAL PROCEDURES	
Cable Adjustment	310-03-30
SPECIFICATIONS	310-03-31

Official Licensed Product
Ford Motor Company

DESCRIPTION AND OPERATION

Vehicle Speed Control

Component Location

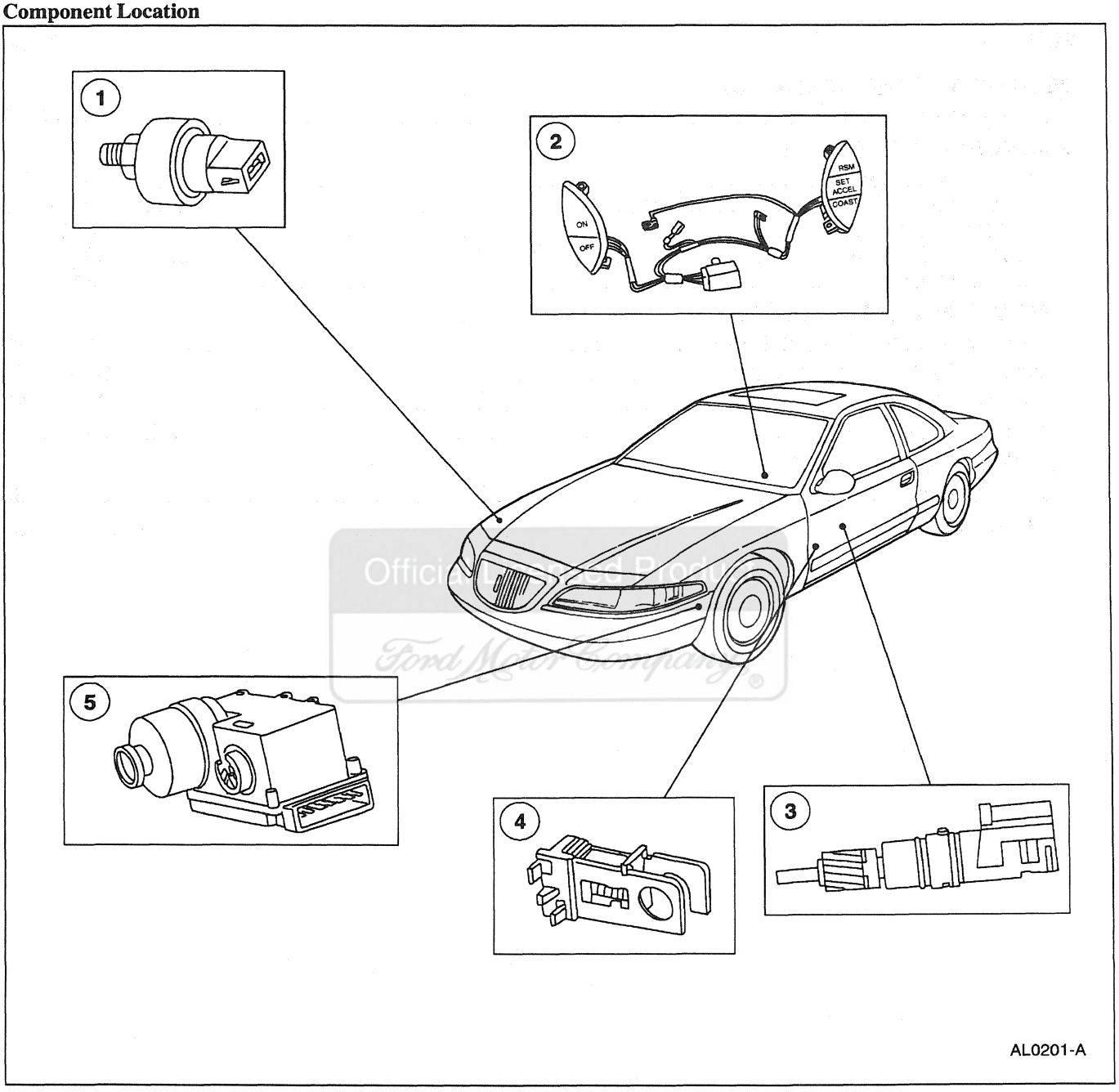

Item	Part Number	Description
1	9F924	Deactivator Switch
2	9C888	Speed Control Actuator Switch
3	9E731	Vehicle Speed Sensor

Item	Part Number	Description
4	13480	Brake Pedal Position (BPP) Switch
5	9C735	Speed Control Servo

(Continued)

DESCRIPTION AND OPERATION (Continued)

The system operates independently of engine vacuum; therefore, no vacuum lines are required.

The speed control servo is mounted under the LH front fender (16005) , forward of the wheel. The speed control servo connects to the throttle linkage with a speed control actuator cable. The speed control servo integrates system electronics, eliminating the need for any other speed control electronic modules in the vehicle.

The speed control actuator switch is mounted in the steering wheel (3600).

The vehicle speed sensor (VSS) is mounted to the transmission. The VSS is a magnetic pickup driven by a gear which is driven by the transmission. The VSS sends a signal to the speed control servo (9C735) proportional to vehicle speed.

The air bag sliding contact is located at the center of the steering wheel . It transfers the electrical signals from the steering column wiring to the following components:

- Driver side air bag module (043B13).
- Horn blow switch (13A875).
- Speed control actuator switch (9C888).

The brake pedal position (BPP) switch is a normally open switch that closes when the brake pedal (2455) is applied. The BPP sends an electrical signal to the speed control servo when closed and disengages the speed control system. The BPP returns to its open position when the brake pedal is released.

The deactivator switch is a normally closed switch. The deactivator switch replaces the speed control dump valve (9C727) as a redundant safety feature in the system.

- Under normal conditions, when the brake pedal is applied, an electrical (brake on/off) signal from the stoplamp circuit to the speed control servo will disengage the system.
- Under increased brake pedal efforts, the deactivator switch will open and remove power to the speed control servo , releasing the throttle from the servo control.

The deactivator switch is located at the front RH frame rail to the rear of the air suspension compressor.

Official Licensed Product
Ford Motor Company

DIAGNOSIS AND TESTING

Vehicle Speed Control

Refer to Electrical and Vacuum Troubleshooting Manual, Cell 31, Speed Control for schematic and connector information.

Special Tool(s)

ST1137-A	73 Digital Multimeter or equivalent 105-R0051

Inspection and Verification

1. Inspect to determine if one of the following mechanical or electrical concerns apply:

Visual Inspection Chart

Mechanical	Electrical
• Inspect and verify that: — Speed control actuator cable is adjusted properly without holding the throttle open or increasing idle speed. — Throttle linkage operates freely and smoothly when connected to the speed control actuator cable and speed control servo.	• Verify proper horn operation. • Verify stoplight operation. • Check circuit fuses, power distribution box fuses 8 (20A), 34 (15A) and fuse junction panel fuse 32 (15A). • Inspect and verify that: — Connections are complete with no loose wires or terminals. — Wiring is not broken, shorted or corroded. — Wiring is not misrouted.

DIAGNOSIS AND TESTING (Continued)

2. If the inspection reveals obvious concern(s) that can be readily identified, repair as required.
3. **NOTE:** If the Self-Test Diagnostics indicate system pass, road test vehicle to confirm results.

   Perform Self-Test Diagnostics procedure.

Self-Test Diagnostics

⚠ WARNING: THIS TEST IS A KEY ON ENGINE OFF (KOEO) TEST ONLY THAT IS CONDUCTED IN PARK ONLY WITH EMERGENCY BRAKE FULLY ENGAGED.

- Enter Self-Test Diagnostics by depressing the speed control OFF switch while turning the ignition key ON, ensuring engine does not start and is not running. The speed control indicator lamp on the instrument panel will flash once to indicate that the speed control module entered the diagnostic mode. Five additional flashes at this point indicate a defective speed control servo. Release the OFF switch.
- **NOTE:** If the ON switch is not pressed within 5 seconds after entering the diagnostic mode, the module times out and the procedure must be started over.

  Press the remaining switches in this sequence: ON, RESUME (RSM), COAST (CST), and SET/ACCEL.
- The speed control indicator lamp will flash as each switch is pressed. Press each switch in the sequence immediately after the light goes out for the previous switch.
- After all five speed control switches have been pressed, the indicator lamp will flash to indicate a Pass or Fail:
  - — 1 Flash - (With dynamic throttle pull).
  - — 2 Flashes - BPP switch defective, circuit defective, or brake pedal applied.
  - — 3 Flashes - Deactivator switch is open or circuit defective.
  - — 4 Flashes - Vehicle speed signal is out of range or not connected.
- Immediately after the passed STATIC test, the speed control module then performs a DYNAMIC test automatically by actuating the throttle lever from 1mm to 10 mm of travel from the idle position. During the DYNAMIC throttle pull, observe the throttle movement to witness any binding or sticking of the actuator cable, proper connection of the actuator cable to the throttle lever, and ensure the THROTTLE RETURNS BACK TO IDLE POSITION.
- Return ignition switch to the OFF position and proceed to the following Symptom Chart, if necessary.

Symptom Chart

NOTE: Self-Test Diagnostics must be performed before proceeding to Symptom Chart.

NOTE: New speed control diagnostic software is available in version 12 or higher for New Generation STAR (NGS) Tester 418-F048 (007-00500). When using this software it is necessary to use Speed Control Cable 005-00586 with NGS Tester.

Symptom Chart

Condition	Possible Source	Action
• Flash Code 1	• —	• System Pass.
• Flash Code 1 — Failed Dynamic Throttle Pull At Throttle	• Speed control actuator cable.	• REPLACE the speed control actuator cable. REFER to Actuator Cable — Speed Control. PERFORM the Self-Test Diagnostics.
• Flash Code 1 — Failed Dynamic Throttle Pull At Servo	• Speed control actuator cable. • Speed control servo.	• GO to Pinpoint Test A.
• Flash Code 1 — The Speed Control System Is Inoperative	• Vehicle speed sensor (VSS).	• GO to Pinpoint Test B.
• Flash Code 2 — Brake Pedal Position Switch Circuit Failure	• Brake pedal position (BPP) switch. • Circuitry. • Servo.	• GO to Pinpoint Test C.

DIAGNOSIS AND TESTING (Continued)

Symptom Chart (Continued)

Condition	Possible Source	Action
• Flash Code 3 — Deactivator Switch Circuit Failure	• Deactivator switch. • Circuitry. • Servo.	• GO to Pinpoint Test D.
• Flash Code 4 — Vehicle Speed Sensor (VSS) Circuit Failure	• Vehicle speed sensor (VSS). • Circuitry. • Servo.	• GO to Pinpoint Test E.
• Flash Code 5 — Speed Control Servo Failure	• Speed control servo.	• REPLACE the speed control servo; REFER to Actuator — Speed Control Servo. PERFORM the Self-Test Diagnostics.
• The Speed Control Is Inoperative — No Flash Codes	• Fuse. • Circuitry. • Deactivator switch. • Brake pedal position (BPP) switch. • Stoplamp bulb. • Speed control actuator switches. • Vehicle speed sensor (VSS). • Speed control servo.	• GO to Pinpoint Test F.
• The Coast Switch Is Inoperative	• Speed control actuator switches. • Speed control servo.	• GO to Pinpoint Test G.
• The SET/ACCL Switch Is Inoperative	• Speed control actuator switches. • Speed control servo.	• GO to Pinpoint Test H.
• The Resume Switch Is Inoperative	• Speed control actuator switches. • Speed control servo.	• GO to Pinpoint Test J.
• The OFF Switch Is Inoperative — No Flash Codes	• Speed control actuator switches.	• REPLACE the speed control actuator switches. REFER to Switch — Speed Control Actuator.
• The Speed Control Indicator Lamp Is Always On	• Speed control servo. • Hybrid electronic cluster. • Circuitry.	• GO to Pinpoint Test K.
• The Set Speed Fluctuates	• Vehicle speed sensor (VSS). • Speed control servo. • Circuitry. • Linkage between speed control actuator cable and throttle body. • Engine.	• GO to Pinpoint Test M.
• The Speed Control Indicator Is Inoperative	• Indicator. • Circuitry. • Hybrid electronic cluster.	• REFER to Section 413-01.

Ford Motor Company

DIAGNOSIS AND TESTING (Continued)

Pinpoint Tests

PINPOINT TEST A: FLASH CODE 1 — FAILED DYNAMIC THROTTLE PULL AT SERVO

TEST CONDITIONS	TEST DETAILS/RESULTS/ACTIONS
A1 CHECK SPEED CONTROL SERVO CABLE	
	1 Disconnect speed control servo cable from speed control servo. 2 Repeat self-test diagnostics while an assistant observes speed control servo operation. • Does the speed control servo operate properly? → **Yes** REPLACE the speed control servo cable; REFER to Actuator Cable — Speed Control. PERFORM the Self-Test Diagnostics. → **No** REPLACE the speed control servo; REFER to Actuator — Speed Control Servo. PERFORM the Self-Test Diagnostics.

PINPOINT TEST B: FLASH CODE 1 — THE SPEED CONTROL SYSTEM IS INOPERATIVE

TEST CONDITIONS	TEST DETAILS/RESULTS/ACTIONS
B1 CHECK THE SPEEDOMETER OPERATION	
	1 Observe the speedometer for proper operation. • Does the speedometer operate properly? → **Yes** GO to **B2**. → **No** REFER to Section 413-01.

(Continued)

Ford Motor Company

DIAGNOSIS AND TESTING (Continued)

PINPOINT TEST B: FLASH CODE 1 — THE SPEED CONTROL SYSTEM IS INOPERATIVE (Continued)

TEST CONDITIONS	TEST DETAILS/RESULTS/ACTIONS
B2 CHECK THE VEHICLE SPEED SENSOR (VSS) CIRCUITRY	
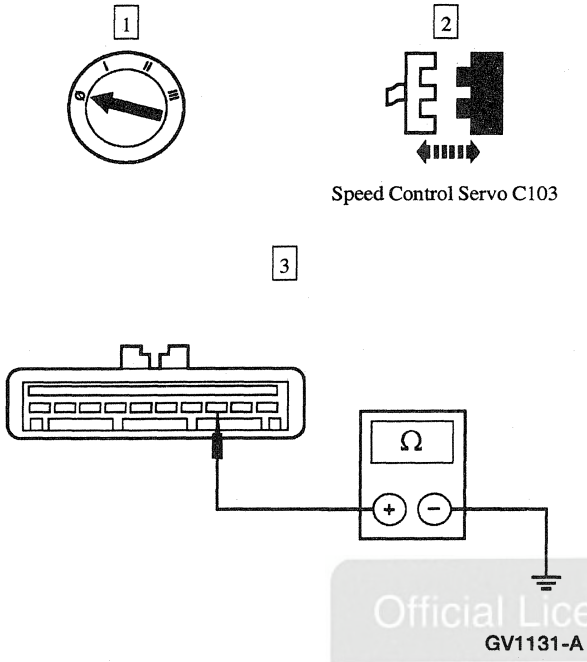	3 Measure the resistance between the speed control servo C103-3, circuit 150 (DG/W), and ground. • Is the resistance greater than 10,000 ohms? → **Yes** GO to **B3**. → **No** REPAIR circuit 150 (DG/W). PERFORM the Self-Test Diagnostics.
B3 CHECK CIRCUIT 150 (DG/W) FOR OPEN	
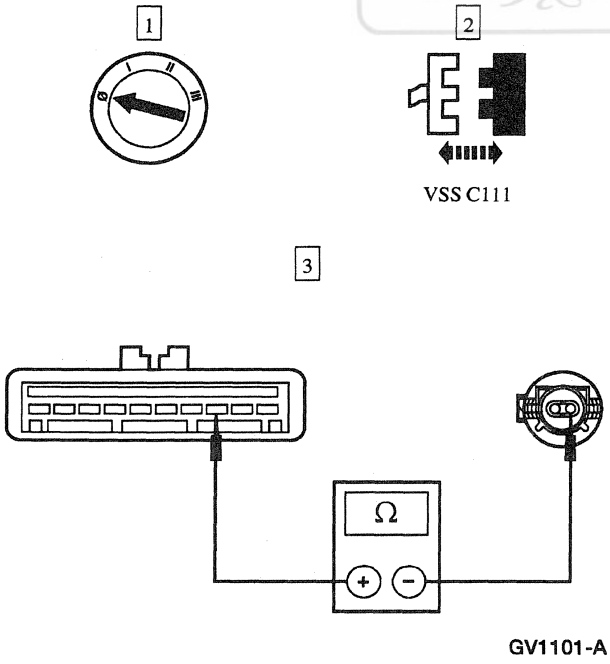	3 Measure the resistance between the speed control servo C103-3, circuit 150 (DG/W), and vehicle speed sensor (VSS) C111, circuit 679 (GY/BK). • Is the resistance less than 5 ohms? → **Yes** REPLACE the speed control servo. REFER to Actuator — Speed Control Servo. PERFORM the Self-Test Diagnostics. → **No** REPAIR circuit 150 (DG/W) and/or circuit 679 (GY/BK). PERFORM the Self-Test Diagnostics.

Official Licensed Product
Ford Motor Company

DIAGNOSIS AND TESTING (Continued)

PINPOINT TEST C: FLASH CODE 2 — BRAKE PEDAL POSITION SWITCH CIRCUIT FAILURE

TEST CONDITIONS	TEST DETAILS/RESULTS/ACTIONS
C1 CHECK THE BRAKE PEDAL POSITION (BPP) SWITCH CIRCUITRY SHORT TO POWER	
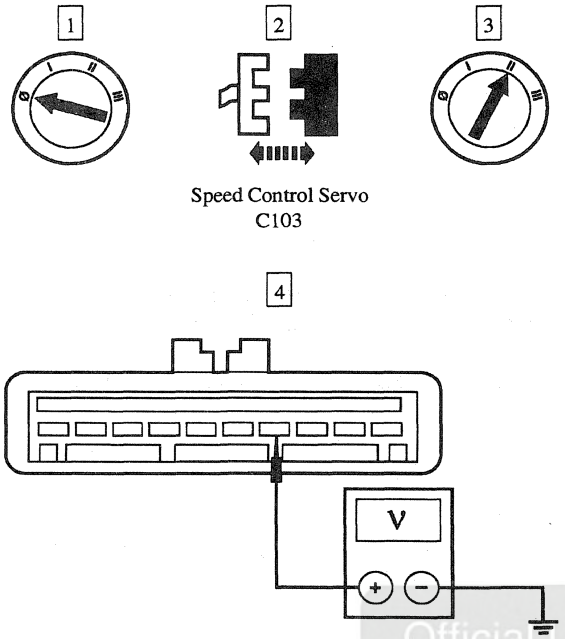	4 Measure the voltage between speed control servo C103-4, circuit 511 (LG), and ground. • Is voltage present? → **Yes** GO to **C2**. → **No** GO to **C3**.
C2 CHECK THE BRAKE PEDAL POSITION (BPP) SWITCH	
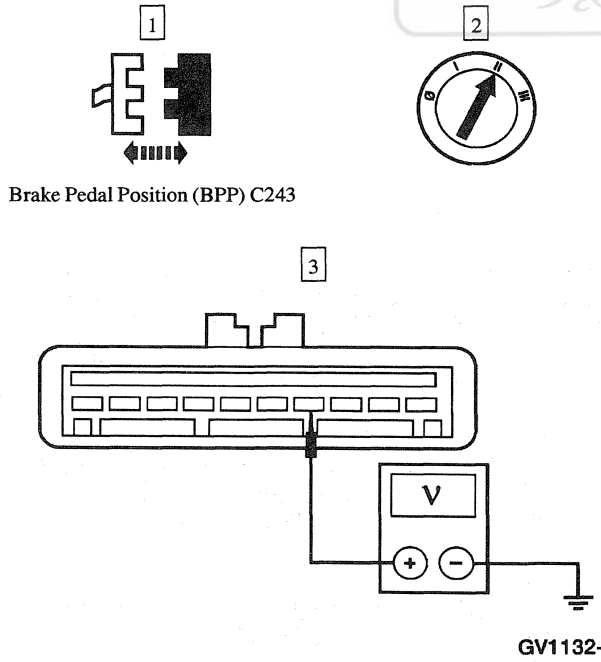	3 Measure the voltage between speed control servo C103-4, circuit 511 (LG), and ground. • Is voltage present? → **Yes** REPAIR circuit 511 (LG). PERFORM the Self-Test Diagnostics. → **No** REPLACE the BPP switch; REFER to Section 417-01. PERFORM the Self-Test Diagnostics.

Official Licensed Product Ford Motor Company

(Continued)

DIAGNOSIS AND TESTING (Continued)

PINPOINT TEST C: FLASH CODE 2 — BRAKE PEDAL POSITION SWITCH CIRCUIT FAILURE (Continued)

TEST CONDITIONS	TEST DETAILS/RESULTS/ACTIONS
C3 CHECK CIRCUIT 511 (LG) FOR OPEN	
1 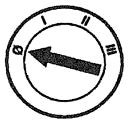 2 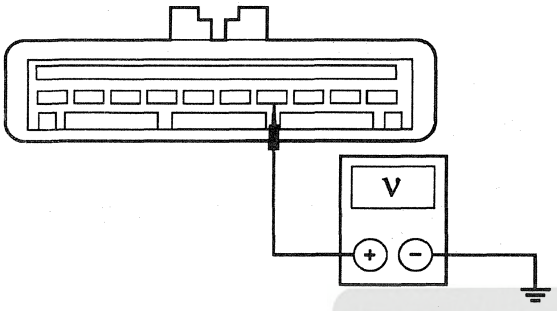 GV1132-A	2 Measure the voltage between speed control servo C103-4, circuit 511 (LG), and ground while depressing the brake pedal. • Is the voltage greater than 10 volts? → **Yes** REPLACE the speed control servo; REFER to Actuator — Speed Control Servo. PERFORM the Self-Test Diagnostics. → **No** REPAIR circuit 511 (LG). PERFORM the Self-Test Diagnostics.

Officially Licensed Product Ford Motor Company

PINPOINT TEST D: FLASH CODE 3 — DEACTIVATOR SWITCH CIRCUIT FAILURE

TEST CONDITIONS	TEST DETAILS/RESULTS/ACTIONS
D1 CHECK THE DEACTIVATOR SWITCH CIRCUITRY	
1 2 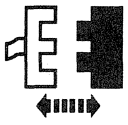 Speed Control Servo C103 3 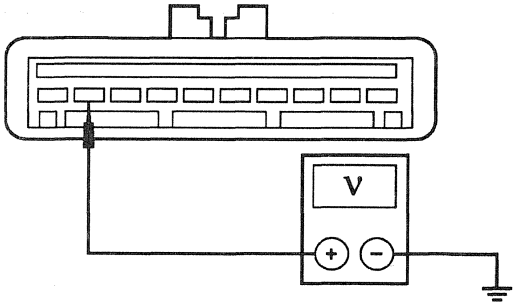 GV1004-A	3 Measure the voltage between speed control servo C103-9, circuit 146 (W/PK), and ground. • Is the voltage greater than 10 volts? → **Yes** REPLACE speed control servo; REFER to Actuator — Speed Control Servo. PERFORM the Self-Test Diagnostics. → **No** GO to **D2**.

(Continued)

DIAGNOSIS AND TESTING (Continued)

PINPOINT TEST D: FLASH CODE 3 — DEACTIVATOR SWITCH CIRCUIT FAILURE (Continued)

TEST CONDITIONS	TEST DETAILS/RESULTS/ACTIONS
D2 CHECK CIRCUIT 10 (LG/R) FOR AN OPEN	
1 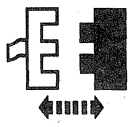 Deactivator Switch C128 2 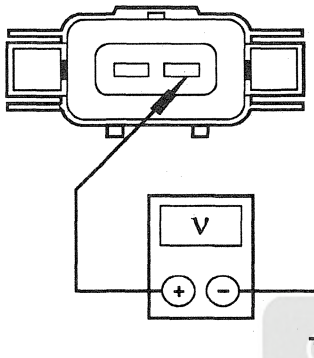 GL0668-A	2 Measure the voltage between deactivator switch C128, circuit 10 (LG/R), and ground. • Is the voltage greater than 10 volts? → **Yes** GO to **D3**. → **No** REPAIR circuit 10 (LG/R). PERFORM the Self-Test Diagnostics.
D3 CHECK THE DEACTIVATOR SWITCH	
1 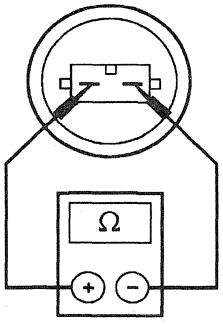 GV0660-A	1 Measure the resistance between the deactivator switch terminals (component side). • Is the resistance less than 5 ohms? → **Yes** REPAIR circuit 146 (W/PK). PERFORM the Self-Test Diagnostics. → **No** REPLACE the deactivator switch; REFER to Switch — Deactivator. PERFORM the Self-Test Diagnostics.

Official Licensed Product
Ford Motor Company

DIAGNOSIS AND TESTING (Continued)

PINPOINT TEST E: FLASH CODE 4 — VEHICLE SPEED SENSOR (VSS) CIRCUIT FAILURE

TEST CONDITIONS	TEST DETAILS/RESULTS/ACTIONS
E1 CHECK THE SPEEDOMETER OPERATION	
	1 Check the speedometer for proper operation. • Does the speedometer operate properly? → **Yes** REPLACE the speed control servo; REFER to Actuator — Speed Control Servo. PERFORM the Self-Test Diagnostics. → **No** REFER to Section 413-01. PERFORM the Self-Test Diagnostics.

PINPOINT TEST F: THE SPEED CONTROL IS INOPERATIVE — NO FLASH CODES

TEST CONDITIONS	TEST DETAILS/RESULTS/ACTIONS
F1 CHECK THE POWER CIRCUITRY TO THE SPEED CONTROL SERVO	
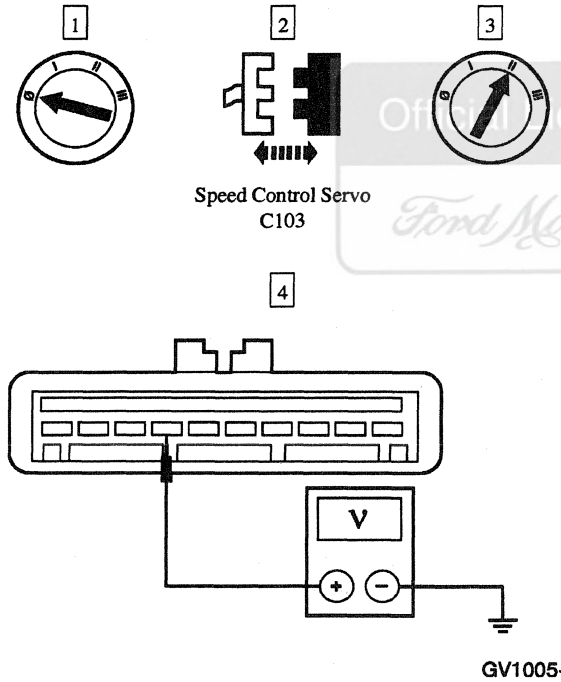	4 Measure the voltage between speed control servo C103-7, circuit 1040 (R/BK), and ground. • Is the voltage greater than 10 volts? → **Yes** GO to **F3.** → **No** GO to **F2.**

Official Licensed Product Ford Motor Company

(Continued)

DIAGNOSIS AND TESTING (Continued)

PINPOINT TEST F: THE SPEED CONTROL IS INOPERATIVE — NO FLASH CODES (Continued)

TEST CONDITIONS	TEST DETAILS/RESULTS/ACTIONS
F2 CHECK THE FUSE JUNCTION PANEL FUSE 34 (15A)	
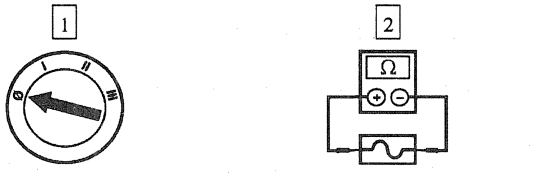 Fuse Junction Panel Fuse 34 (15A)	• Is the fuse OK? → **Yes** REPAIR circuit 1040 (R/BK). PERFORM the Self-Test Diagnostics. → **No** REPLACE the fuse. PERFORM the Self-Test Diagnostics. If the fuse fails again, CHECK for short to ground. REPAIR as necessary. PERFORM the Self-Test Diagnostics.
F3 CHECK THE SPEED CONTROL SERVO GROUND	
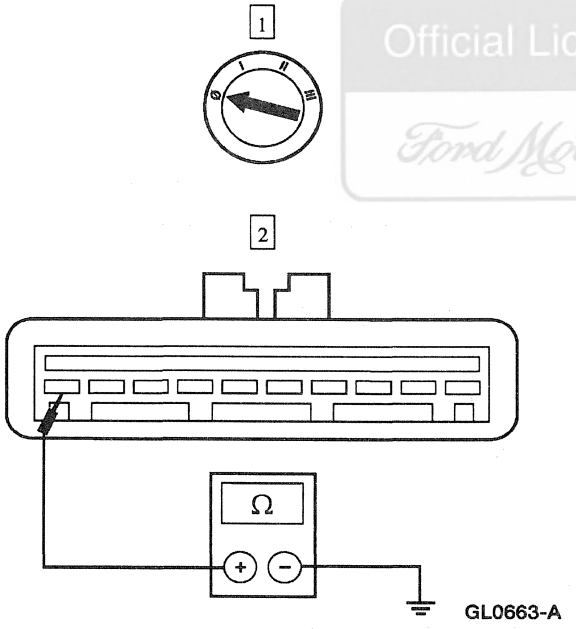	2 Measure the resistance between speed control servo C103-10, circuit 57 (BK), and ground. • Is the resistance less than 5 ohms? → **Yes** GO to **F4**. → **No** REPAIR circuit 57 (BK). PERFORM the Self-Test Diagnostics.

Official Licensed Product
Ford Motor Company

(Continued)

DIAGNOSIS AND TESTING (Continued)

PINPOINT TEST F: THE SPEED CONTROL IS INOPERATIVE — NO FLASH CODES (Continued)

TEST CONDITIONS	TEST DETAILS/RESULTS/ACTIONS
F4 CHECK THE INDICATOR CIRCUIT	
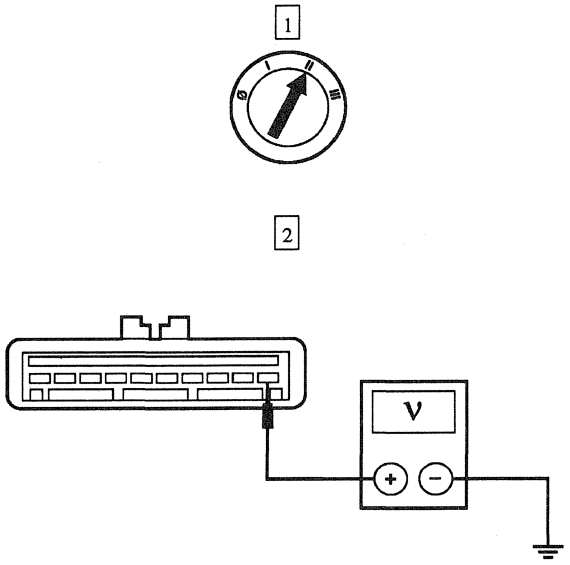	2 Measure the voltage between the speed control servo C103-1, circuit 563 (O/Y), and ground. • Is the voltage greater than 10 volts? → **Yes** GO to **F5**. → **No** REFER to Section 413-01.
F5 CHECK THE SPEED CONTROL ACTUATOR SWITCH	
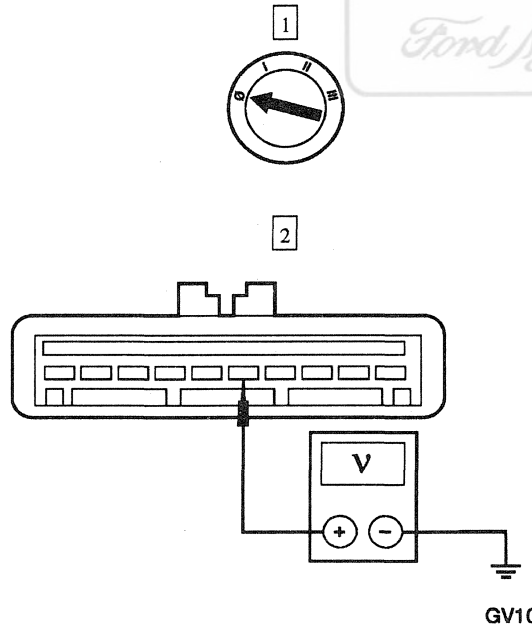	2 Measure the voltage between speed control servo C103-5, circuit 151 (LB/BK), and ground while pressing and releasing the speed control actuator switch ON button. • Is the voltage greater than 10 volts with the button depressed and 0 volts with the button released? → **Yes** GO to **F6**. → **No** GO to **F8**.

(Continued)

Ford Motor Company

DIAGNOSIS AND TESTING (Continued)

PINPOINT TEST F: THE SPEED CONTROL IS INOPERATIVE — NO FLASH CODES (Continued)

TEST CONDITIONS	TEST DETAILS/RESULTS/ACTIONS
F6 CHECK THE SPEED CONTROL ACTUATOR SWITCH	
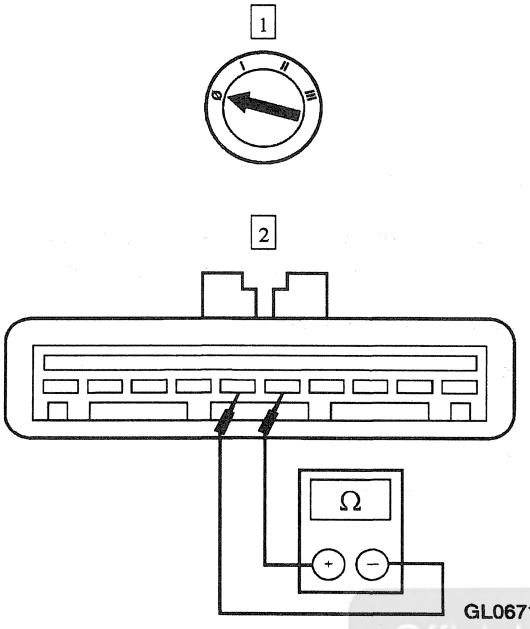 GL0671-A	2 Measure the resistance between speed control servo C103-5, circuit 151 (LB/BK) and speed control servo C103-6, circuit 461 (O), while depressing the speed control actuator OFF switch. • Is the resistance less than 5 ohms? → **Yes** GO to **F7**. → **No** GO to **F9**.
F7 CHECK THE SPEED CONTROL ACTUATOR SWITCH CIRCUITRY	
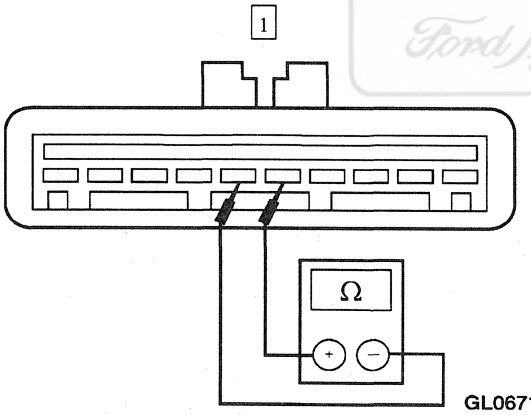 GL0671-A	1 Measure the resistance between speed control servo C103-5, circuit 151 (LB/BK); and speed control servo C103-6, circuit 461 (O), while depressing the SET/ACCEL switch. • Is the resistance between 612 and 748 ohms? → **Yes** REPLACE the speed control servo; REFER to Actuator — Speed Control Servo. PERFORM the Self-Test Diagnostics. → **No** REPLACE the speed control actuator switch; REFER to Switch — Speed Control Actuator. PERFORM the Self-Test Diagnostics.

(Continued)

©Visual Technology Product Ford Motor Company

DIAGNOSIS AND TESTING (Continued)

PINPOINT TEST F: THE SPEED CONTROL IS INOPERATIVE — NO FLASH CODES (Continued)

TEST CONDITIONS	TEST DETAILS/RESULTS/ACTIONS
F8 CHECK CIRCUIT 151 (LB/BK) FOR AN OPEN	
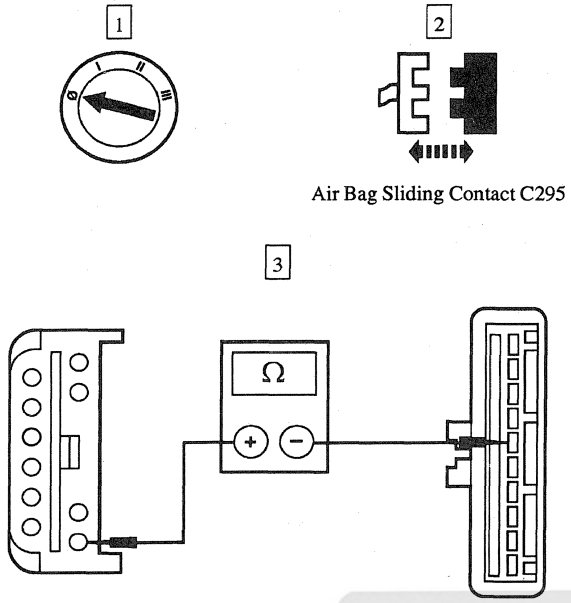	3 Measure the resistance between air bag sliding contact C295F-7, circuit 151 (LB/BK), and speed control servo C103-5, circuit 151 (LB/BK). • Is the resistance less than 5 ohms? → **Yes** GO to **F10**. → **No** REPAIR circuit 151 (LB/BK). PERFORM the Self-Test Diagnostics.
F9 CHECK CIRCUIT 848 (DG/O) FOR AN OPEN	
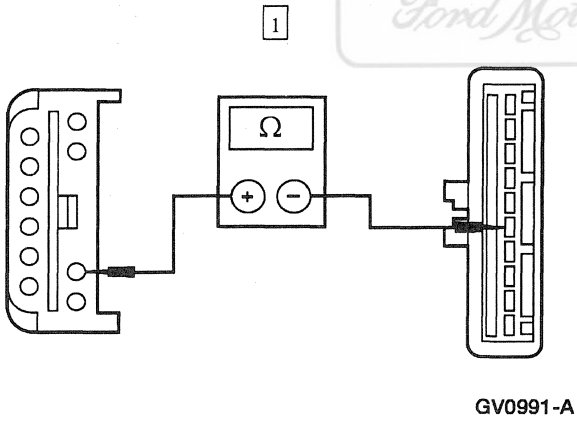	1 Measure the resistance between air bag sliding contact C295F-8, circuit 461 (O), and speed control servo C103-6, circuit 461 (O). • Is the resistance less than 5 ohms? → **Yes** GO to **F11**. → **No** REPAIR circuit 461 (O). PERFORM the Self-Test Diagnostics.
F10 CHECK THE AIR BAG SLIDING CONTACT	
	1 Remove the driver side air bag. REFER to Section 501-20B.

(Continued)

Official Licensed Product Ford Motor Company

DIAGNOSIS AND TESTING (Continued)

PINPOINT TEST F: THE SPEED CONTROL IS INOPERATIVE — NO FLASH CODES (Continued)

TEST CONDITIONS	TEST DETAILS/RESULTS/ACTIONS
F10 CHECK THE AIR BAG SLIDING CONTACT (Continued)	
2 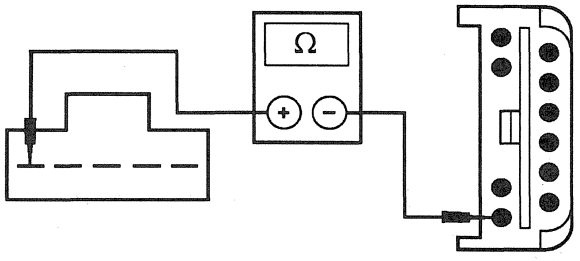 GV0992-A	2 Measure the resistance between the top of the air bag sliding contact terminal 1, and air bag sliding contact C295M-7. • Is the resistance less than 1 ohm? → **Yes** REPLACE the speed control actuator switch; REFER to Switch — Speed Control Actuator. PERFORM the Self-Test Diagnostics. → **No** REPLACE the air bag sliding contact; REFER to Section 501-20B. PERFORM the Self-Test Diagnostics.
F11 CHECK THE AIR BAG SLIDING CONTACT FOR AN OPEN	
1 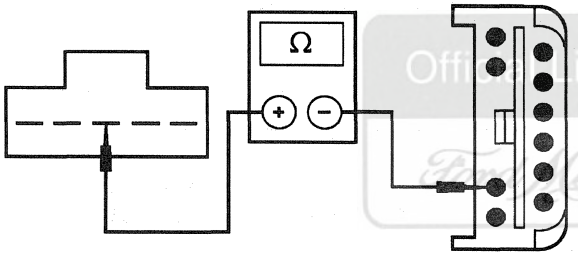 GV0993-A	1 Measure the resistance between the top of the air bag sliding contact terminal 3, and air bag sliding contact C295M-8. • Is the resistance less than 1 ohm? → **Yes** REPLACE the speed control actuator switch; REFER to Switch — Speed Control Actuator. PERFORM the Self-Test Diagnostics. → **No** REPLACE the air bag sliding contact; REFER to Section 501-20B. PERFORM the Self-Test Diagnostics.

Office Licensed Product
Ford Motor Company

DIAGNOSIS AND TESTING (Continued)

PINPOINT TEST G: THE COAST SWITCH IS INOPERATIVE

TEST CONDITIONS	TEST DETAILS/RESULTS/ACTIONS
G1 CHECK THE SPEED CONTROL ACTUATOR SWITCH	
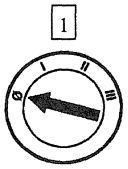 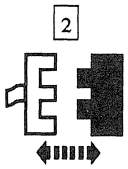 Speed Control Servo C103 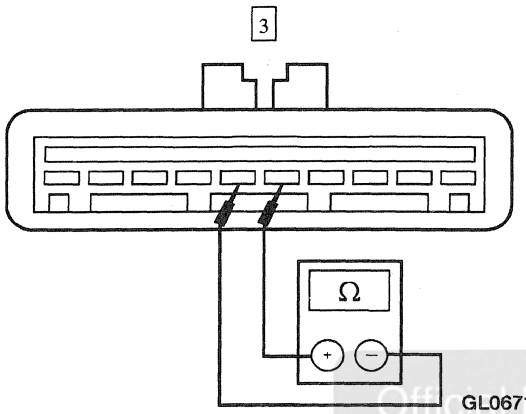 GL0671-A	3 Measure the resistance between speed control servo C103-5, circuit 151 (LB/BK), and speed control servo C103-6, circuit 461 (O), while depressing the speed control actuator switch COAST button. • Is the resistance between 108 and 132 ohms? → **Yes** REPLACE the speed control servo; REFER to Actuator — Speed Control Servo. PERFORM the Self-Test Diagnostics. → **No** REPLACE the speed control actuator switch; REFER to Switch — Speed Control Actuator. PERFORM the Self-Test Diagnostics.

Office Licensed Product
Ford Motor Company

DIAGNOSIS AND TESTING (Continued)

PINPOINT TEST H: THE SET/ACCL SWITCH IS INOPERATIVE

TEST CONDITIONS	TEST DETAILS/RESULTS/ACTIONS
H1 CHECK THE SPEED CONTROL ACTUATOR SWITCH	
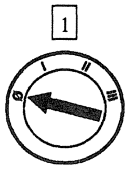 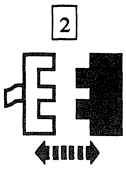 Speed Control Servo C103 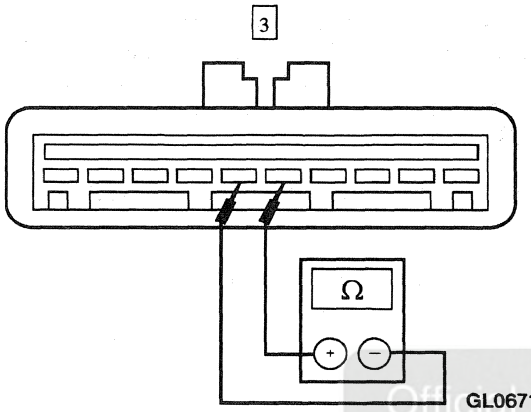 GL0671-A	3 Measure the resistance between speed control servo C103-5, circuit 151 (LB/BK), and speed control servo C103-6, circuit 461 (O), while depressing the speed control actuator switch SET/ACCEL button. • Is the resistance between 612 and 748 ohms? → **Yes** REPLACE the speed control servo; REFER to Actuator — Speed Control Servo. PERFORM the Self-Test Diagnostics. → **No** REPLACE the speed control actuator switch; REFER to Switch — Speed Control Actuator. PERFORM the Self-Test Diagnostics.

Official Licensed Product
Ford Motor Company

DIAGNOSIS AND TESTING (Continued)

PINPOINT TEST J: THE RESUME SWITCH IS INOPERATIVE

TEST CONDITIONS	TEST DETAILS/RESULTS/ACTIONS
J1 CHECK THE SPEED CONTROL ACTUATOR SWITCH	
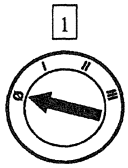 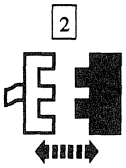 Speed Control Servo C103 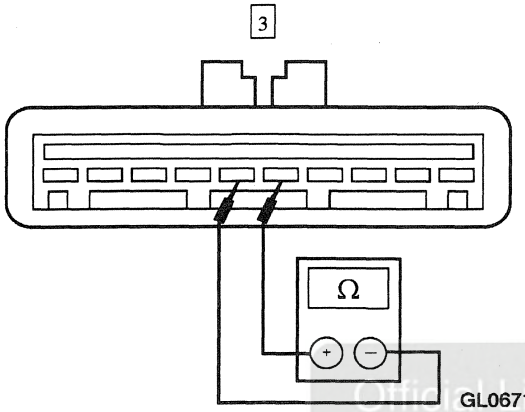 GL0671-A	3 Measure the resistance between speed control servo C103-5, circuit 151 (LB/BK), and speed control servo C103-6, circuit 461 (O), while pressing the speed control actuator switch RESUME button. • Is the resistance between 1980 and 2420 ohms? → **Yes** REPLACE the speed control servo; REFER to Actuator — Speed Control Servo. PERFORM the Self-Test Diagnostics. → **No** REPLACE the speed control actuator switch; REFER to Switch — Speed Control Actuator. PERFORM the Self-Test Diagnostics.

Official Licensed Product
Ford Motor Company

PINPOINT TEST K: THE SPEED CONTROL INDICATOR LAMP IS ALWAYS ON

TEST CONDITIONS	TEST DETAILS/RESULTS/ACTIONS
K1 CHECK SPEED CONTROL SERVO FOR SHORT TO GROUND	
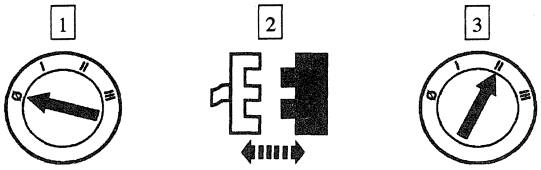 Speed Control Servo C103	• Is the speed control indicator lamp illuminated? → **Yes** GO to **K2**. → **No** REPLACE the speed control servo; REFER to Actuator — Speed Control Servo. PERFORM the Self-Test Diagnostics.

(Continued)

DIAGNOSIS AND TESTING (Continued)

PINPOINT TEST K: THE SPEED CONTROL INDICATOR LAMP IS ALWAYS ON (Continued)

TEST CONDITIONS	TEST DETAILS/RESULTS/ACTIONS
K2 CHECK CIRCUIT 563 (O/Y) FOR SHORT TO GROUND	
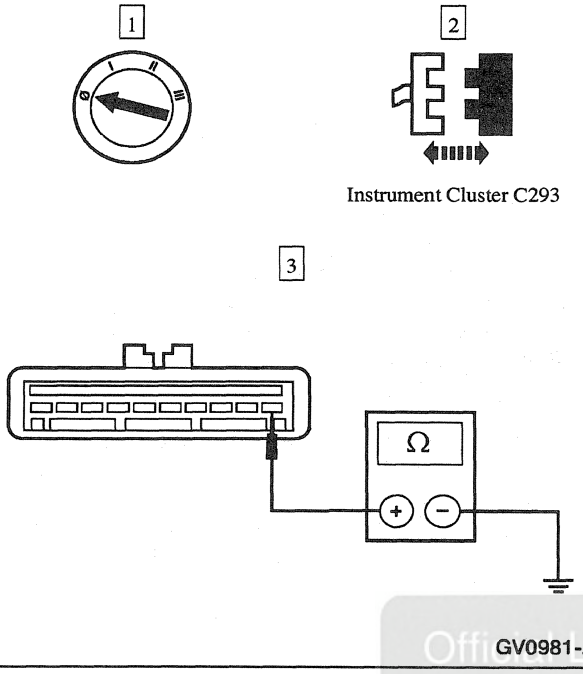	3 Measure the resistance between the speed control servo C103-1, circuit 563 (O/Y), and ground. • Is the resistance greater than 10,000 ohms? → **Yes** REPLACE the hybrid electronic instrument cluster; REFER to Section 413-01. PERFORM the Self-Test Diagnostics. → **No** REPAIR circuit 563 (O/Y). PERFORM the Self-Test Diagnostics.

Officially Licensed Product
Ford Motor Company

PINPOINT TEST M: THE SET SPEED FLUCTUATES

TEST CONDITIONS	TEST DETAILS/RESULTS/ACTIONS
M1 CHECK THAT THE CONDITION OCCURS ONLY WHEN USING SPEED CONTROL	
	1 Verify the engine is properly tuned and the condition does not occur when speed control is not in use. • Does the condition occur when speed control is not in use? → **Yes** REPAIR engine as required. REFER to Powertrain Control/Emissions Diagnosis Manual [1]. → **No** GO to **M2**.

(Continued)

1 Can be purchased as a separate item.

DIAGNOSIS AND TESTING (Continued)

PINPOINT TEST M: THE SET SPEED FLUCTUATES (Continued)

TEST CONDITIONS	TEST DETAILS/RESULTS/ACTIONS
M2 CHECK FOR BINDING IN SPEED CONTROL CABLE AND THROTTLE BODY LINKAGE	
	1 Check for binding or sticking of speed control actuator cable or throttle linkage and throttle plate. • Are the components OK? → **Yes** GO to M3. → **No** REPAIR as required. PERFORM the Self-Test Diagnostics.
M3 CHECK THE SPEEDOMETER OPERATION	
	1 Drive the vehicle and observe the speedometer operation. • Does the speedometer needle fluctuate? → **Yes** REFER to Section 413-01. → **No** REPLACE the speed control servo; REFER to Actuator — Speed Control Servo. PERFORM the Self-Test Diagnostics.

Official Licensed Product
Ford Motor Company

REMOVAL AND INSTALLATION

Actuator Cable — Speed Control

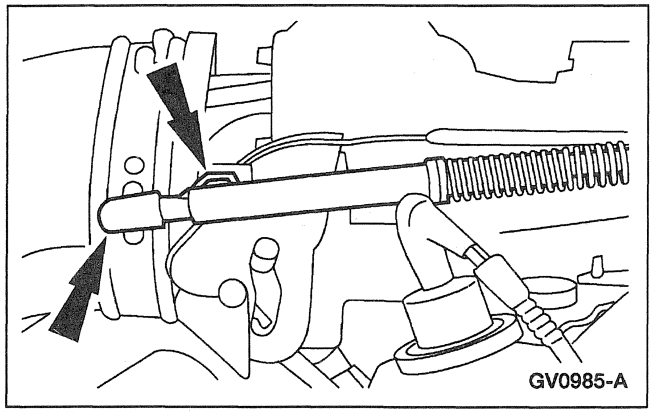

1. Remove the speed control actuator cable from the throttle body.
   - Lift the clip to release the cable.

REMOVAL AND INSTALLATION (Continued)

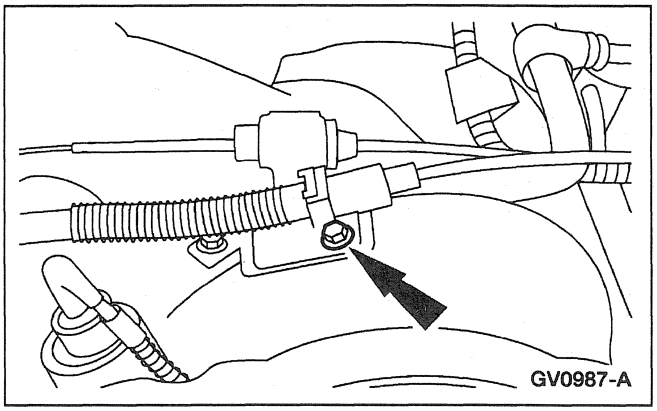

2. Remove the retaining screw from the speed control actuator cable bracket.

3. Remove the speed control servo (9C735); refer to Actuator — Speed Control Servo.

4. Remove the speed control actuator cable.

Installation

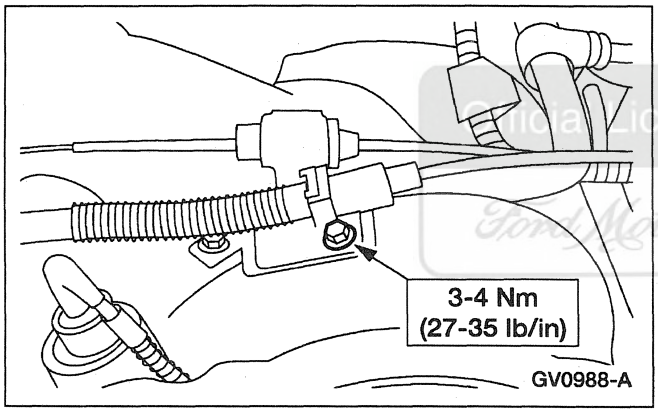

1. To install, reverse the removal procedure.

Original Licensed Product
Ford Motor Company

Actuator — Speed Control Servo

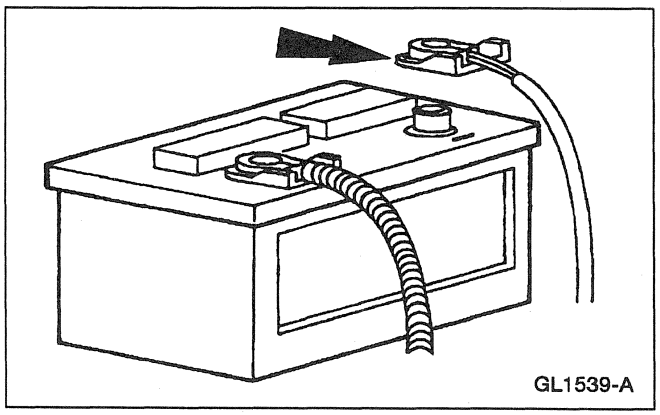

1. ⚠ **CAUTION: Electronic modules are sensitive to static electrical charges. If exposed to these charges, damage may result.**

   Disconnect the battery ground cable.

REMOVAL AND INSTALLATION (Continued)

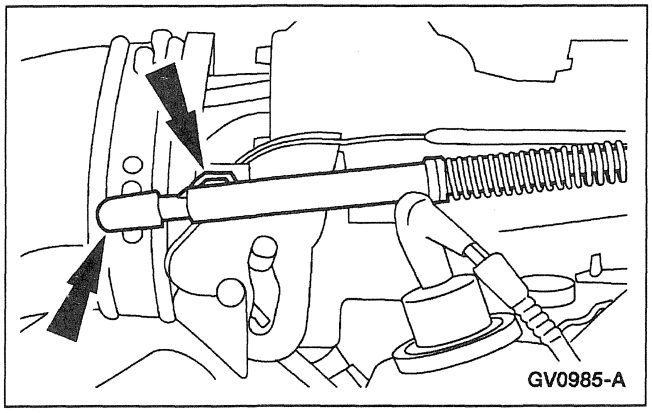

2. Remove the speed control actuator cable from the throttle body.
   - Lift the clip to release the cable.

3. Remove the LH wheel and tire; refer to Section 204-04.

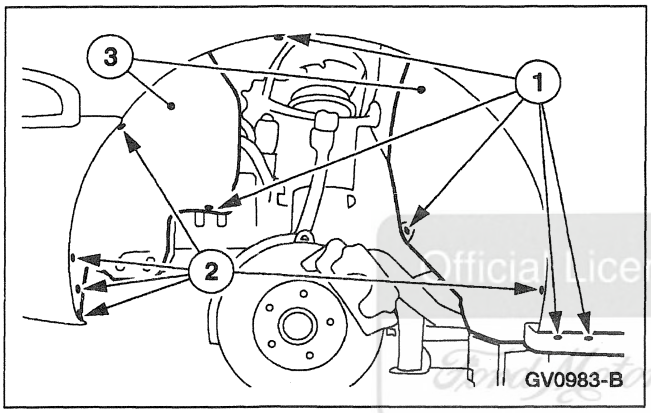

4. Remove the LH front fender splash shield (16102).
   1 Remove the pushpins.
   2 Remove the retaining screws.
   3 Remove the LH front fender splash shield.

Official Licensed Product
Ford Motor Company

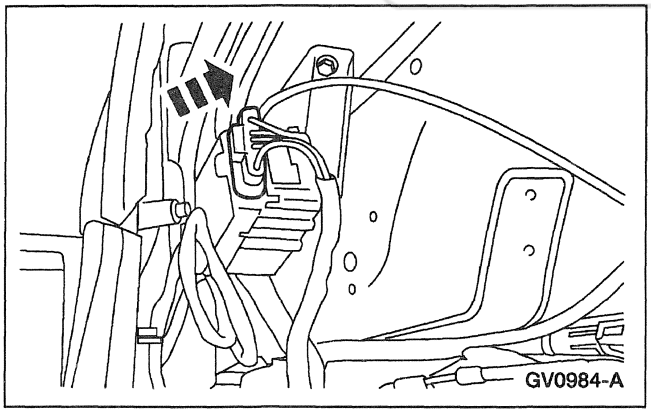

5. Disconnect the speed control servo electrical connector.

REMOVAL AND INSTALLATION (Continued)

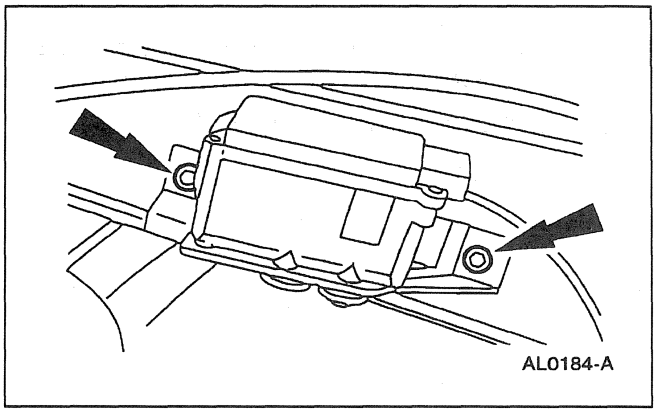

6. Lower the speed control servo.
   - Remove the bolts.

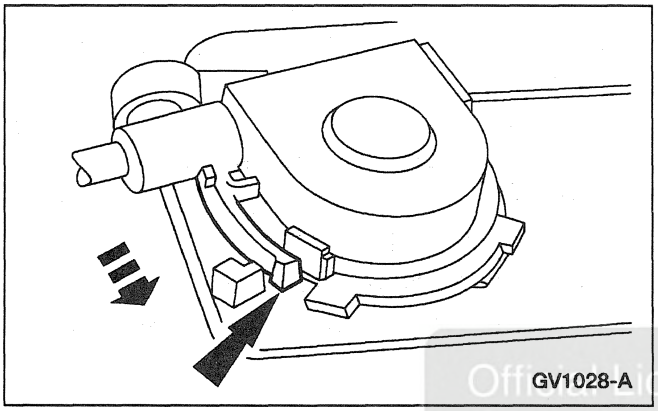

7. Depress the locking tab and rotate the speed control actuator cable cap to remove.

Office Licensed Product
Ford Motor Company

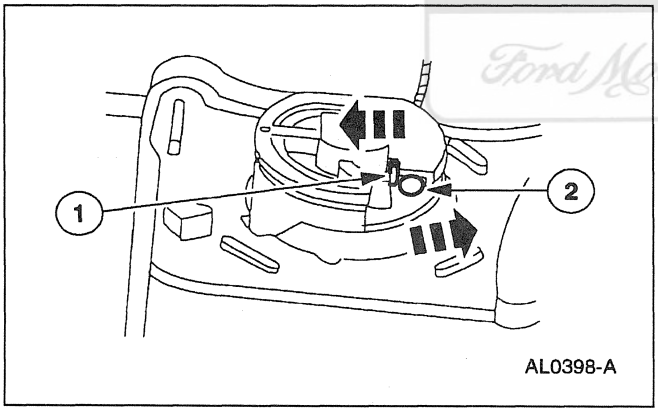

8. Disconnect the speed control actuator cable (9A825) from the speed control servo pulley to remove the speed control servo.
   1 Gently push the retaining spring.
   2 Remove the speed control cable slug.

Installation

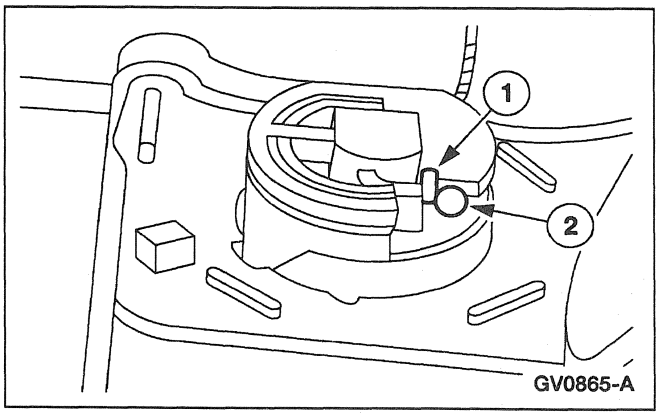

1. Insert the speed control cable slug into the speed control servo pulley slot.
   1 Gently push the retaining spring.
   2 Insert the speed control cable slug into the speed control servo pulley slot.

REMOVAL AND INSTALLATION (Continued)

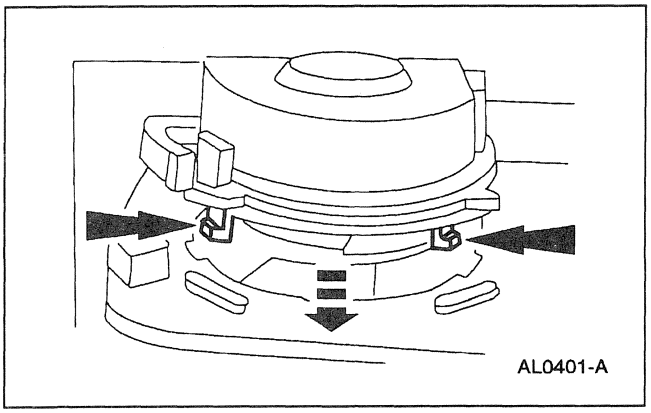

2. **NOTE:** Ensure the rubber seal is fully seated onto the speed control actuator cable cap.

   NOTE: Incorrect wrapping of the speed control actuator cable around the speed control servo pulley may result in a high idle condition.

   Release the compressed spring while aligning the speed control actuator cable cap tabs with the slots in the speed control servo housing.

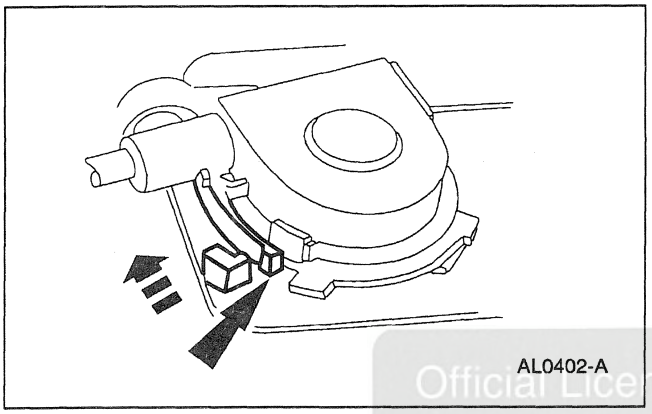

3. Rotate the speed control actuator cable cap until the locking arm engages.

Official Licensed Product
Ford Motor Company

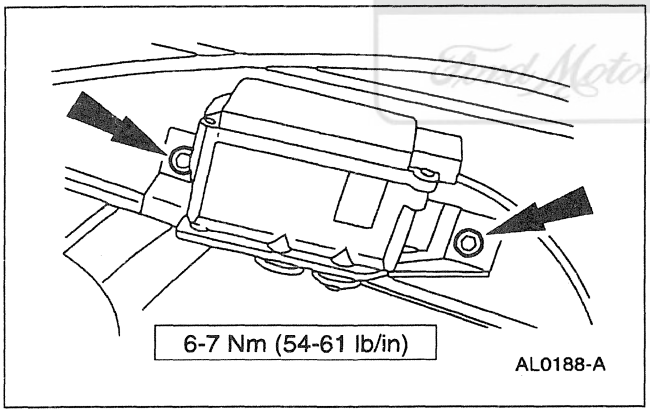

4. Install the speed control servo.

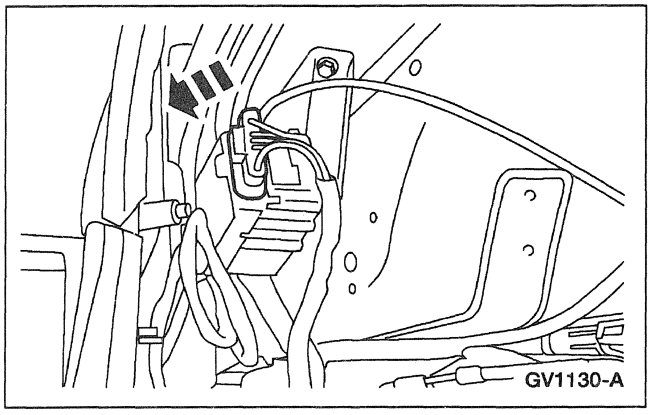

5. Connect the speed control servo electrical connector.

REMOVAL AND INSTALLATION (Continued)

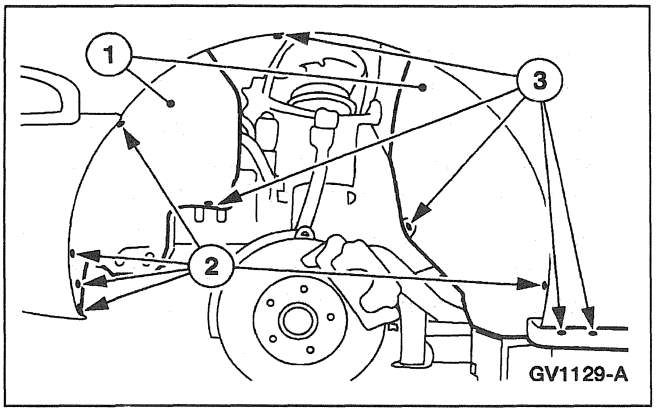

6. Install the LH front fender splash shield.
   1 Install the splash shield.
   2 Install the screws.
   3 Install the pushpins.

7. Install the LH wheel and tire; refer to Section 204-04.

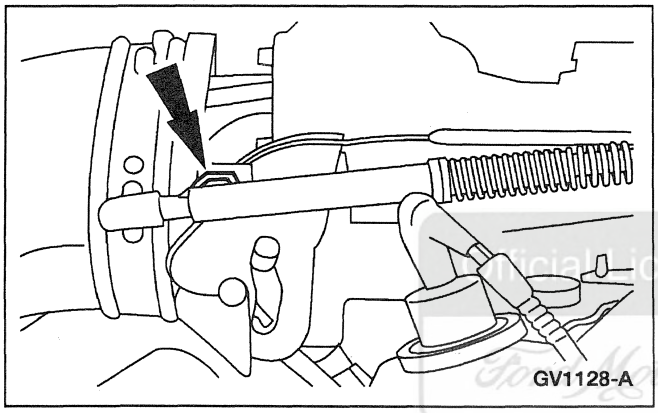

8. Install the speed control actuator cable to the throttle body.

Official Licensed Product
Ford Motor Company

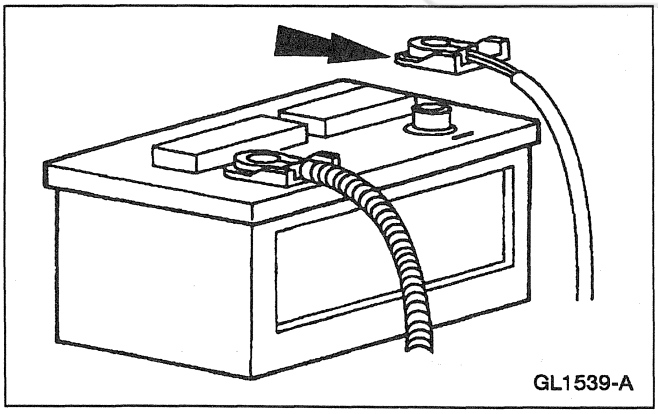

9. **NOTE:** When the battery is disconnected and reconnected, some abnormal drive symptoms may occur while the vehicle relearns its adaptive strategy. The vehicle may need to be driven 16 km (10 mi) or more to relearn the strategy.

   Reconnect the battery ground cable.

Switch — Speed Control Actuator

Removal

1. Remove the steering wheel (3600); refer to Section 211-04.

REMOVAL AND INSTALLATION (Continued)

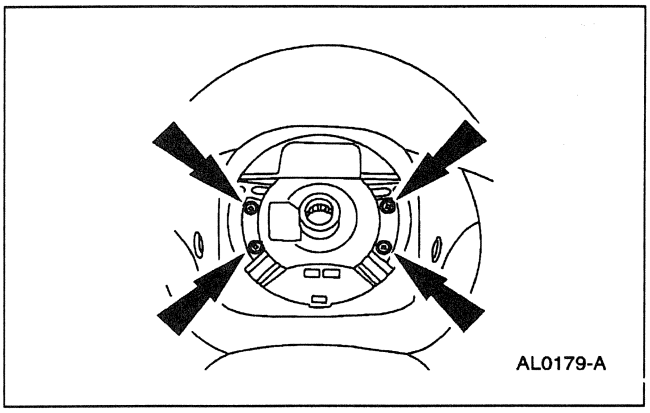

2. Remove the retaining screws from the rear side of the steering wheel.

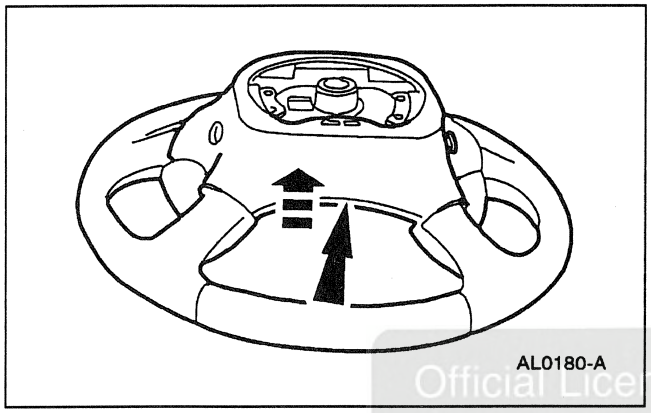

3. Remove the steering wheel back cover.

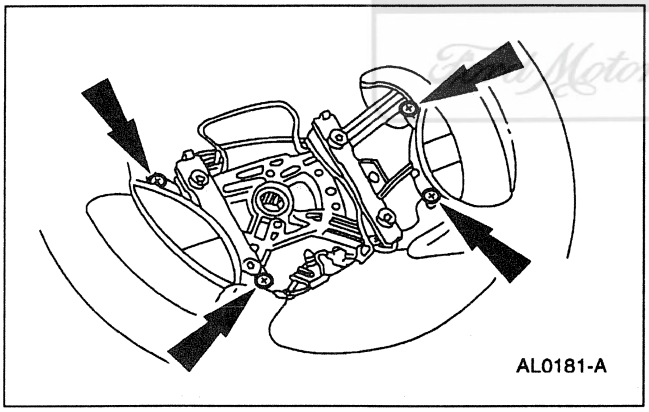

4. Remove the retaining screws from the speed control actuator switch (9C888).

5. Remove the speed control actuator switches.

Official Licensed Product

REMOVAL AND INSTALLATION (Continued)

Installation

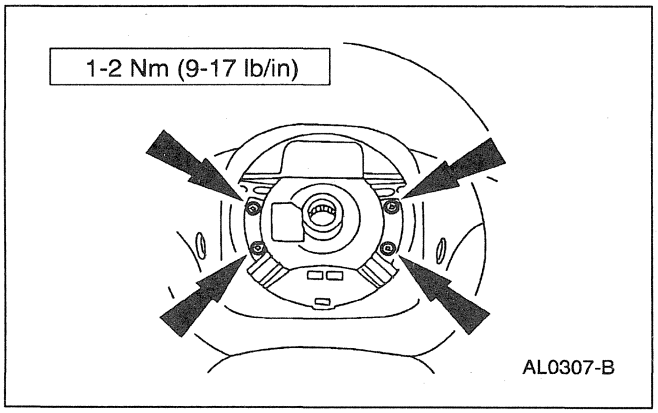

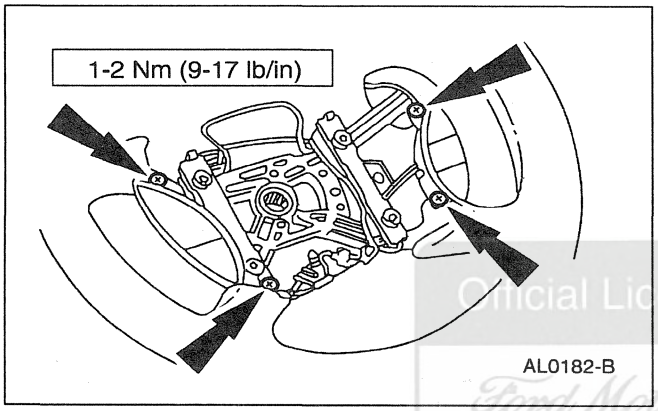

1. To install, reverse the removal procedure.

Official Licensed Product
Ford Motor Company

Switch — Deactivator

1. Raise and support the vehicle; refer to Section 100-02.

2. Remove the wheel and tire; refer to Section 204-04.

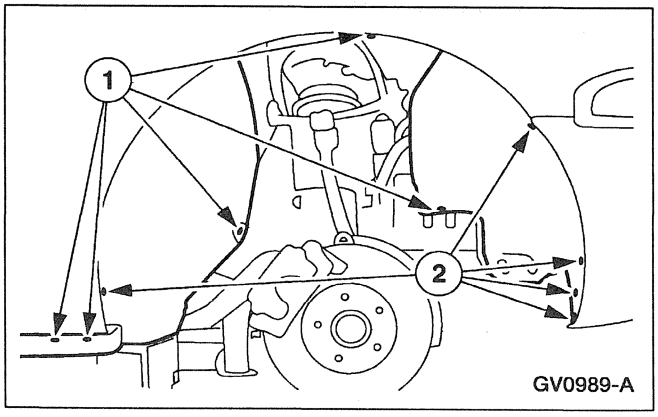

3. Remove the RH front fender splash shield (16103).
   1 Remove the pushpins.
   2 Remove the retaining screws.
   - Remove the RH front fender splash shield.

REMOVAL AND INSTALLATION (Continued)

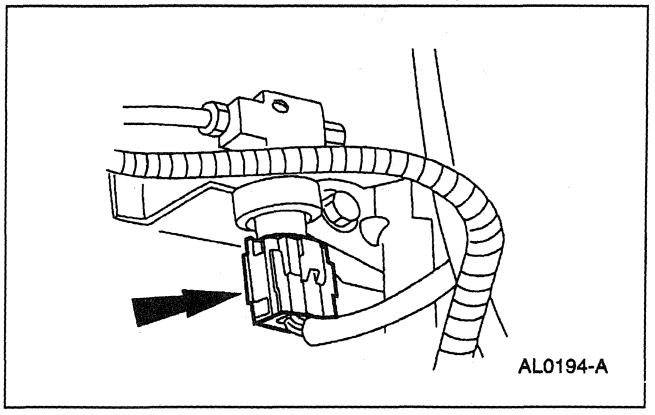

4. Disconnect the deactivator switch electrical connector.

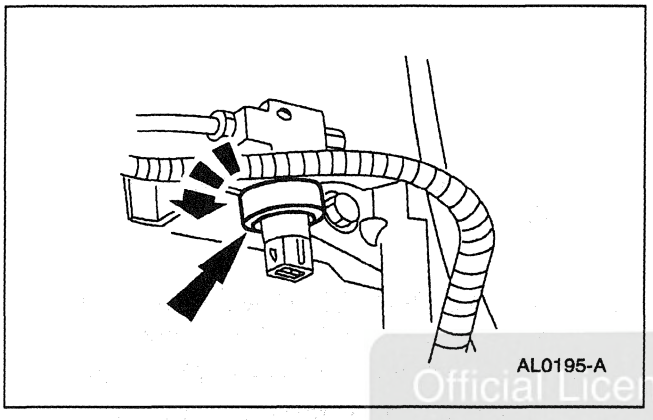

5. Remove the deactivator switch.
   - Unscrew to remove the switch.

Official Licensed Product
Ford Motor Company

Installation

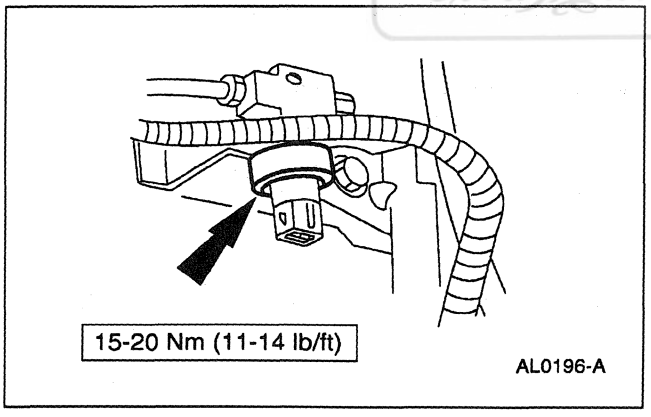

1. **NOTE:** Bleed the brake system. Refer to Section 206-00.

   To install, reverse the removal procedure.

GENERAL PROCEDURES

Cable Adjustment

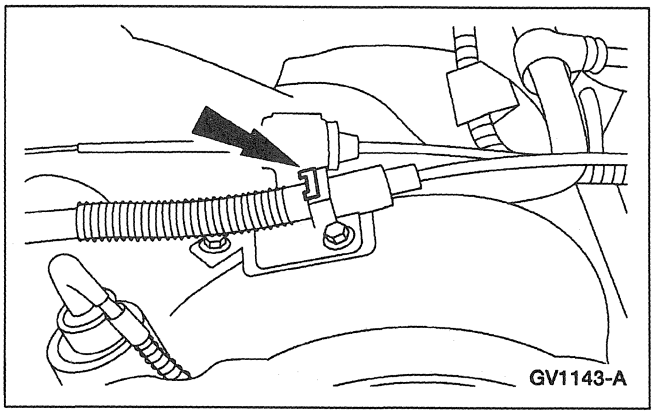

1. Remove the retaining clip from the cable adjuster at the throttle.

2. Make sure the throttle is in the fully closed position.

3. **CAUTION: The speed control actuator cable must not be pulled tight, otherwise, the speed control may not operate properly.**
   Pull on the speed control actuator cable to take up the slack. Loosen at least one notch so there is approximately 3 mm (0.118 in) of slack in the speed control actuator cable.

Official Licensed Product
Ford Motor Company

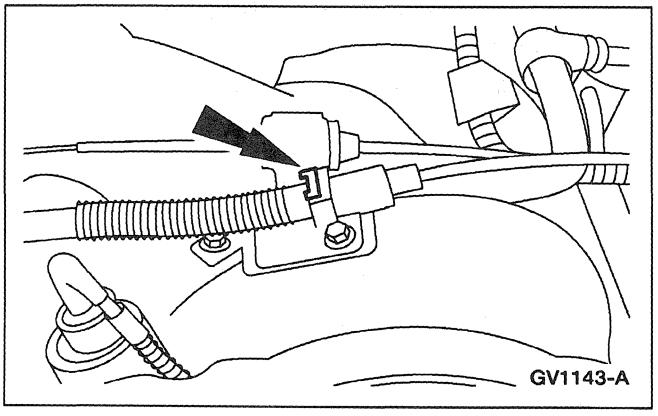

4. Insert the speed control actuator cable retaining clip and snap into place.

5. Check that the throttle linkage operates freely and smoothly.

SPECIFICATIONS

Torque Specifications

Description	Nm	Lb/Ft	Lb/In
Deactivator Switch	15-20	11-14	—
Rear Steering Wheel Screws	1-2	—	9-17
Speed Control Actuator Switch	1-2	—	9-17
Speed Control Servo Bracket Screws	6-7	—	54-61

(Continued)

Torque Specifications

Description	Nm	Lb/Ft	Lb/In
Speed Control Servo to Accelerator Bracket Screw	3-4	—	27-35
Speed Control Servo to Bracket Bolts	6-7	—	54-61

Official Licensed Product
Ford Motor Company

METRICS

BOLT STRENGTH IDENTIFICATION

ENGLISH SYSTEM

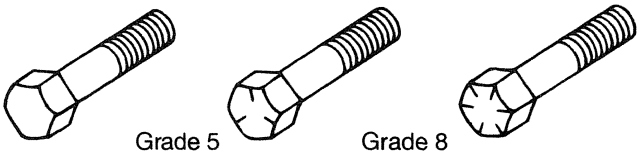

Grade 1 or 2 Grade 5 Grade 8

English bolts: Identification marks on the bolt head represent Rockwell hardness. Generally, the bolt's grade is equal to the number of marks plus two. The higher the grade, the stronger the bolt.

METRIC SYSTEM

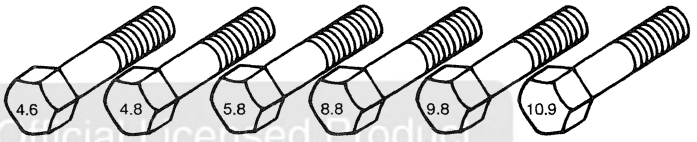

Official Licensed Product
Ford Motor Company

Metric bolts: Identification class numbers on bolt heads represent tensile strength. Higher numbers indicate stronger bolts. Common metric fastener bolt strength properties are 9.8 and 10.9.

HEX NUT STRENGTH IDENTIFICATION

ENGLISH SYSTEM

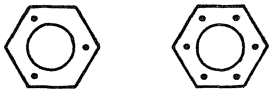

Grade 5 Grade 8

Identification dots represent Rockwell hardness. The nut's grade is equal to the number of dots plus two. The higher the grade, the stronger the nut.

METRIC SYSTEM

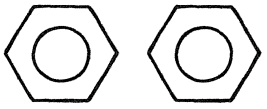

Identification class numbers on nuts represent tensile strength. Higher numbers indicate stronger nuts. Nuts may also have blue finish or paint daub on hex flat.

OTHER TYPES OF PARTS

Metric identification schemes vary by type of part, most often a variation of that used for bolts and nuts. Note that many types of English and Metric fasteners carry no special identification if they are otherwise unique.

–Stamped U-Nuts

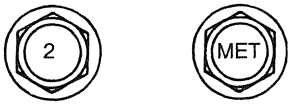

–Tapping, thread forming and certain other case hardened screws.

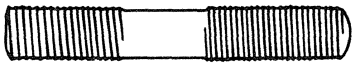

CLASS 10.9 CLASS 9.8 CLASS 8.8

–Studs, Large studs may carry the property class number. Smaller studs use a geometric code on the end.

METRICS

ENGLISH/METRIC CONVERSION

DESCRIPTION	MULTIPLY	BY	FOR METRIC EQUIVALENT
Acceleration	ft/s^2	0.3048	m/s^2
	in/s^2	0.0254	m/s^2
Torque	lb-in	0.11298	N·m
	lb-ft	1.3558	N·m
Power	horsepower	0.746	kW
Pressure or Stress	inches of water	0.2491	kPa
	psi	6.895	kPa
	psi	0.069	bar
Energy or Work	BTU	1055.0	Joules(J)
	lb-ft	1.3558	Joules(J)
	kiloWatt-hour	3,600,000 or 3.6×10^6	Joules(J)
Light	foot candle	10.764	lumens/square meter (lm/m^2)
Fuel Performance	miles/gal	0.4251	kilometers/liter (km/L)
	gal/mile	2.3527	liters/kilometer (L/km)
Velocity	mph	1.6093	kilometers/hour (km/h)
Length	inch	25.4	mm
	foot	0.3048	m
	yard	0.9144	m
	mile	1.609	km
Area	square inch (in^2)	645.2	mm^2
		6.45	cm^2
	square ft (ft^2)	0.0929	m^2
	square yard	0.8361	m^2
Volume	cubic inch (in^3)	16387.0	mm^3
		16.387	cm^3
		0.0164	liters (L)
	quart	0.9464	liters (L)
	gallon	3.7854	liters(L)
	cubic yard	0.7646	m^3
Mass	pound	0.4536	kg
	ton	907.18	kg
	ton	0.9078	tonne (t)
Force	kilogram	9.807	N
	ounce	0.2780	N
	pound	4.448	N
Temperature	degree Farenheit (°F)	(°F-32) 0.556	degree Celsius (°C)

Official Licensed Product
Ford Motor Company

Alphabetical Index

A

Acceleration Control 310-02-1
Acceleration Control 310-02-2
310-02-3
Cable Bracket 310-02-6
Cable 310-02-5
Description and Operation 310-02-2
Diagnosis and Testing 310-02-3
Inspection and Verification 310-02-3
Pedal and Shaft 310-02-4
Removal and Installation 310-02-4
Specifications 310-02-8
Symptom Chart 310-02-3

Accessory Drive 303-05-1
Accessory Drive 303-05-2
303-05-3
Belt — Drive 303-05-5
Belt Adjustment 303-05-7
Belt Tensioner — Automatic 303-05-6
Component Test 303-05-4
Description and Operation 303-05-2
Diagnosis and Testing 303-05-3
General Procedures 303-05-7
Inspection and Verification 303-05-3
Removal and Installation 303-05-5
Specifications 303-05-8
Symptom Chart 303-05-4

Anti-Lock Control — Anti-Wheelspin Control 206-09-1
Anti-Lock Brake Control Module 206-09-5
Anti-Lock Brake Sensor 206-09-6
Anti-Lock Brake System 206-09-4
Anti-Lock Control — Anti-Wheelspin Control 206-09-2
206-09-6
Description and Operation 206-09-2
Diagnosis and Testing 206-09-6
Hydraulic Control Unit — Electronic (EHCU) 206-09-37
Hydraulic Control Unit 206-09-5
Inspection and Verification 206-09-6
Module — Anti-Lock Brake Control 206-09-39

Anti-Lock Control — Anti-Wheelspin Control (Continued)
Pinpoint Tests 206-09-10
Removal and Installation 206-09-37
Specifications 206-09-43
Sensor — Anti-Lock Brake, Front 206-09-40
Sensor — Anti-Lock Brake, Rear 206-09-42
Sensor Indicator — Front 206-09-43
Sensor Indicator — Rear 206-09-43
Symptom Chart 206-09-9
Traction Control 206-09-4

Automatic Transaxle/Transmission External Controls 307-05-1
Bezel 307-05-34
Bulb 307-05-35
Cable Adjustment 307-05-38
Cable and Bracket 307-05-30
Description and Operation 307-05-2
Diagnosis and Testing 307-05-2
External Controls 307-05-2
General Procedures 307-05-38
Inspection and Verification 307-05-3
Knob 307-05-37
Pinpoint Tests 307-05-10
Removal and Installation 307-05-30
Specifications 307-05-39
Selector Lever 307-05-32
Symptom Chart 307-05-9

Automatic Transmission — 4R70W 307-01-1
Assembly 307-01-229
Accumulator — 1-2 307-01-149
Accumulator — 2-3 307-01-151
After On-Board Diagnostic 307-01-39
Automatic Transmission — 4R70W 307-01-3
Before Pinpoint Tests 307-01-40
Bushings, Bearings and Thrust Washers Locator 307-01-12
Description and Operation 307-01-3
Diagnosis and Testing 307-01-28
Disassembly and Assembly of Subassemblies 307-01-174
Disassembly 307-01-160
Diagnosis by Symptom Chart Directions 307-01-85
Diagnosis by Symptom 307-01-84
307-01-86
Diagnostic Flow Chart 307-01-29

Official Licensed Product
Ford Motor Company

Alphabetical Index

Automatic Transmission — 4R70W (Continued)

Diagnostic Strategy 307-01-28
Diagnostics 307-01-33
Digital Transmission Range (TR) Sensor — Adjustment 307-01-142
Digital Transmission Range Sensor 307-01-26
Disassembled Views 307-01-6
End Play Check 307-01-227
Extension Housing Seal and Gasket 307-01-129
Fluid Pan, Gasket and Filter 307-01-115
Forward Clutch Cylinder 307-01-197
General Procedures 307-01-254
Geartrain 307-01-17
In-Vehicle Repair 307-01-111
Installation 307-01-249
Identification Tags 307-01-3
Intermediate Clutch Cylinder 307-01-188
Know and Understand the Concern 307-01-30
Leakage Inspection 307-01-80
Main Components and Functions 307-01-15
307-01-20
Main Control — Valve Body 307-01-120
Main Control Valve Body 307-01-174
Manual Control Lever Shaft Seal 307-01-137
On-Board Diagnostics With NGS 307-01-34
Output Shaft and Direct Clutch Cylinder 307-01-209
Output State Control (OSC) Mode 307-01-35
Pinpoint Test G 307-01-75
Pinpoint Tests 307-01-47
Planetary Gear Support Assembly and Planetary One-Way Clutch 307-01-206
Preliminary Inspection 307-01-30
Pump and Intermediate Clutch Piston 307-01-182
Removal 307-01-154
Range Selection 307-01-4
Reverse Clutch 307-01-189
Reverse Sun Gear 307-01-208
Rotunda Transmission Tester 307-01-45
Specifications 307-01-255
Seals, Rings and Gaskets Locator 307-01-14
Servo —Overdrive 307-01-148
Servo —Reverse Servo Assembly 307-01-144
Shift Patterns 307-01-5
Shift Solenoids Pre-Diagnosis 307-01-47
Solenoid Service — Electronic Pressure Control 307-01-134
Special Testing Procedures 307-01-77

Automatic Transmission — 4R70W (Continued)

Stall Speed Test 307-01-78
Stator to Impeller Interference Check 307-01-225
Stator to Turbine Interference Check 307-01-226
Torque Converter Cleaning and Inspection ... 307-01-220
Torque Converter Flushing 307-01-228
Torque Converter Leak Checks 307-01-222
Torque Converter One-Way Clutch Check ... 307-01-224
Torque Converter Service and Replacement 307-01-220
Torque Converter 307-01-16
Transmission Connector Layouts 307-01-45
Transmission Drive Cycle Test 307-01-39
Transmission Electronic Control System 307-01-24
Transmission Filler Tube 307-01-119
Transmission Fluid Cooler — Backflush / Cleaning 307-01-254
Transmission Fluid Cooler 307-01-83
Transmission Fluid Drain and Refill 307-01-111
Transmission Insulator and Retainer 307-01-153
Transmission Support Crossmember 307-01-152
Transmission 307-01-154
307-01-160
307-01-229
307-01-249
Vehicle Speed Sensor (VSS) 307-01-126
Verification of Condition 307-01-30
Visual Inspection 307-01-33

B

Brake System — General Information 206-00-1
Bleeding — Components 206-00-13
Bleeding — System 206-00-18
Booster, Power Brake 206-00-4
Brake Hose 206-00-3
Brake Pressure Control Valve 206-00-3
Brake System, Anti-Lock 206-00-4
Brake System, Hydraulic 206-00-3
Brake System, Parking 206-00-4
Brake System 206-00-2
206-00-4
Brake Tubing 206-00-3
Brakes, Front Disc 206-00-4
Brakes, Rear Disc 206-00-4

Alphabetical Index

Brake System — General Information (Continued)
Component Tests 206-00-11
Description and Operation 206-00-2
Diagnosis and Testing 206-00-4
General Procedures 206-00-13
Hydraulic Leak Check 206-00-22
Master Cylinder, Dual 206-00-3
Pinpoint Tests 206-00-7
Specifications 206-00-23
Symptom Chart 206-00-6

D

Driveline System — General Information 205-00-1
Analysis of Leakage 205-00-7
Analysis of Vibration 205-00-8
Axle Noise 205-00-10
Casting Porosity (Holes in Casting) Repair 205-00-21
Companion Flange Runout Check — Circular 205-00-18
Component Tests 205-00-16
Description and Operation 205-00-2
Diagnosis and Testing 205-00-4
Driveline System 205-00-2
205-00-4
Driveline Vibration 205-00-16
Driveshaft Vibrates 205-00-18
General Procedures 205-00-21
Inspection and Verification 205-00-4
Noise Acceptability 205-00-4
Non-Axle Noise 205-00-10
Preliminary Diagnosis 205-00-4
Specifications 205-00-22
Symptom Chart 205-00-13
Tooth Contact Pattern Check — Gearset 205-00-20
Universal Joint (U-Joint) Inspection 205-00-4

Driveshaft 205-01-1
Description and Operation 205-01-2
Diagnosis and Testing 205-01-2
Disassembly and Assembly 205-01-5
Driveshaft 205-01-2
205-01-3
Driveshafts 205-01-2

Driveshaft (Continued)
Removal and Installation 205-01-3
Specifications 205-01-11
Universal Joint — Single Cardan, Flange Yoke 205-01-8
Universal Joint — Single Cardan, Slip Yoke 205-01-5
Universal Joints 205-01-2

E

Electronic Engine Controls 303-14-1
Camshaft Position (CMP) Sensor 303-14-5
Crankshaft Position (CKP) Sensor 303-14-7
Description and Operation 303-14-3
Diagnosis and Testing 303-14-5
Electronic Engine Control 303-14-3
303-14-5
Engine Coolant Temperature (ECT) Sensor 303-14-12
Fuel Pressure Sensor 303-14-20
Heated Oxygen Sensor (HO2S) 303-14-17
Idle Air Control (IAC) Valve 303-14-11
Intake Air Temperature (IAT) Sensor 303-14-16
Knock Sensor (KS) 303-14-18
Mass Air Flow (MAF) Sensor 303-14-14
Powertrain Control Module (PCM 303-14-9
Removal and Installation 303-14-5
Specifications 303-14-21
Throttle Position (TP) Sensor 303-14-10

Engine 303-01-1
Assembly 303-01-139
Bearing Inspection 303-01-209
Camshaft End Play 303-01-188
Camshaft Lobe Lift 303-01-189
Camshaft Lobe Surface 303-01-189
Camshaft Timing Chains — Timing Sprockets, Tensioners and Guides 303-01-62
Camshafts 303-01-70
Component Tests 303-01-19
Compression Test 303-01-186
Connecting Rod Bearing Journal Clearance 303-01-198
Connecting Rod Bearings 303-01-83
Connecting Rod Bend 303-01-197
Connecting Rod Bushing Diameter 303-01-197

Official Licensed Product

Alphabetical Index

Engine (Continued)

Connecting Rod Cleaning 303-01-196
Connecting Rod Large End Bore 303-01-196
Connecting Rod Twist 303-01-197
Crankshaft Connecting Rod Journal Diameter 303-01-195
Crankshaft Connecting Rod Journal Taper ... 303-01-195
Crankshaft End Play 303-01-190
Crankshaft Main Bearing Journal Diameter ... 303-01-190
Crankshaft Rear Oil Seal and Slinger 303-01-87
Crankshaft Runout 303-01-191
Cylinder Block Core Plug Replacement 303-01-207
Cylinder Block Distortion 303-01-206
Cylinder Bore Cleaning 303-01-207
Cylinder Bore Honing 303-01-206
Cylinder Bore Out-of-Round 303-01-192
Cylinder Bore Taper 303-01-191
Cylinder Head 303-01-177
Description and Operation 303-01-4
Diagnosis and Testing 303-01-15
Disassembly and Assembly of Subassemblies 303-01-177
Disassembly and Assembly 303-01-116
Engine Component View 303-01-6
Engine Front Cover 303-01-47
Engine 303-01-4
303-01-15
303-01-93
303-01-116
303-01-139
Exhaust Manifold —LH Side 303-01-76
Exhaust Manifold —RH Side 303-01-74
Exhaust Manifold Inspection 303-01-208
Flywheel Inspection 303-01-205
Flywheel 303-01-85
Front Oil Seal 303-01-41
General Procedures 303-01-186
Hydraulic Lash Adjuster Leakdown Test 303-01-199
Hydraulic Lash Adjusters 303-01-39
In-Vehicle Repair 303-01-26
Inspection and Verification 303-01-16
Intake Manifold — Upper, Lower and IMRC 303-01-32
Oil Filter Adapter and Oil Pressure Sensor 303-01-89
Oil Level Indicator Tube 303-01-91
Oil Pan and Oil Pump Screen Cover and Tube 303-01-78
Oil Pump 303-01-82
Piston Diameter 303-01-193

Engine (Continued)

Piston Inspection 303-01-192
Piston Pin Bore Diameter 303-01-193
Piston Pin Connecting Rod 303-01-183
Piston Pin Diameter 303-01-196
Piston Ring-to-Groove Clearance 303-01-194
Piston Selection 303-01-194
Piston to Cylinder Bore Clearance 303-01-194
Removal and Installation 303-01-93
Roller Follower Inspection 303-01-199
Roller Followers 303-01-38
Specifications 303-01-209
Symptom Chart 303-01-16
Valve Cover —LH 303-01-26
Valve Cover —RH 303-01-31
Valve Guide Inner Diameter 303-01-202
Valve Inspection 303-01-202
Valve Seat Inspection 303-01-204
Valve Seat Runout 303-01-205
Valve Seat Width 303-01-204
Valve Spring — Retainer and Valve Stem Seal 303-01-40
Valve Spring Free Length 303-01-203
Valve Spring Installed Length 303-01-203
Valve Spring Strength 303-01-203
Valve Stem Diameter 303-01-200
Valve Stem to Valve Guide Clearance 303-01-201
Water Pump 303-01-72

Engine Cooling 303-03-1
Backflushing — Heater Core 303-03-44
Bypass Tube 303-03-21
Component Tests 303-03-13
Cooling System Draining, Filling and Bleeding 303-03-39
Cooling System Inspection 303-03-36
Description and Operation 303-03-3
Diagnosis and Testing 303-03-5
Degas Bottle 303-03-34
Engine Cooling 303-03-3
303-03-5
Fan — Motor, Fan Blade and Shroud 303-03-28
Flushing — Engine and Radiator 303-03-43
General Procedures 303-03-36
Hose — Radiator 303-03-29
Housing, Thermostat 303-03-20
Inspection and Verification 303-03-5
Motor, Fan 303-03-32

Ford Motor Company

Alphabetical Index

Engine Cooling (Continued)
Pinpoint Tests 303-03-6
Removal and Installation 303-03-18
Radiator 303-03-23
Specifications 303-03-46
Sensor — Engine Coolant Temperature (ECT) 303-03-35
Symptom Chart 303-03-5
Thermostat 303-03-18
Water Pump 303-03-23

Engine Emission Control 303-08-1
Description and Operation 303-08-2
Diagnosis and Testing 303-08-4
Differential Pressure Feedback EGR Valve 303-08-7
EGR Vacuum Regulator Solenoid 303-08-9
EGR Valve Tube 303-08-6
EGR Valve 303-08-5
Engine Emission Control 303-08-2
303-08-4
PCV Valve / Ventilation Hose 303-08-9
Removal and Installation 303-08-5
Specifications 303-08-13
Secondary Air Injection Diverter Valve 303-08-12
Secondary Air Pump 303-08-11

Engine Ignition 303-07-1
Description and Operation 303-07-2
Diagnosis and Testing 303-07-3
Ignition Coil 303-07-3
Ignition System 303-07-2
303-07-3
Removal and Installation 303-07-3
Specifications 303-07-8
Spark Plug 303-07-6

Evaporative Emissions 303-13-1
Canister — Evaporative Emission 303-13-5
Canister Purge — Valve 303-13-6
Description and Operation 303-13-2
Diagnosis and Testing 303-13-4
Evaporative Emission System 303-13-2
303-13-4
Removal and Installation 303-13-5
Specifications 303-13-8
Valve — Evaporative Emission Fuel Tank Pressure Control Valve 303-13-6

Exhaust Components — General Information 309-00-1
Description and Operation 309-00-2
Diagnosis and Testing 309-00-4
Dual Converter Y Pipe 309-00-9
Exhaust System Alignment 309-00-14
Exhaust System 309-00-2
309-00-4
General Procedures 309-00-14
Hanger Insulators 309-00-12
Inspection and Verification 309-00-4
Muffler / Tailpipe 309-00-7
Pinpoint Tests 309-00-5
Removal and Installation 309-00-7
Specifications 309-00-14
Symptom Chart 309-00-5

Official Licensed Product
Ford Motor Company

F

Front Disc Brake 206-03-1
Anchor Plate 206-03-9
Caliper 206-03-6
206-03-12
Description and Operation 206-03-2
Diagnosis and Testing 206-03-2
Disassembly and Assembly 206-03-12
Front Disc Brake 206-03-2
Pads 206-03-3
Removal and Installation 206-03-3
Rotor Shield 206-03-12
Rotor 206-03-10
Specifications 206-03-14

Front Suspension 204-01-1
Arm — Bushing 204-01-6
Arm — Lower 204-01-9
Bar and Link 204-01-17
Description and Operation 204-01-2
Diagnosis and Testing 204-01-4
Front Suspension 204-01-2
204-01-4
General Procedures 204-01-24
Lug Bolts 204-01-4
Removal and Installation 204-01-4
Ride Height 204-01-24
Specifications 204-01-25

Alphabetical Index

Front Suspension (Continued)
Spindle 204-01-19
Spring and Shock Assembly 204-01-22
Wheel Alignment 204-01-24
Wheel Hub and Bearing 204-01-5

Fuel Charging and Controls 303-04-1
Description and Operation 303-04-2
Diagnosis and Testing 303-04-5
Fuel Charging and Controls 303-04-2
303-04-5
Fuel Injectors 303-04-8
Fuel Pulse Damper 303-04-13
Pressure Regulator — Fuel 303-04-12
Pressure Relief Valve 303-04-15
Removal and Installation 303-04-5
Specifications 303-04-16
Supply Manifold — Fuel Injection 303-04-9
Throttle Body 303-04-5

Fuel System — General Information 310-00-1
Description and Operation 310-00-2
Diagnosis and Testing 310-00-3
Draining 310-00-4
Fuel System 310-00-2
310-00-3
General Procedures 310-00-3
Hairpin Clip Fittings 310-00-11
Pressure Relief 310-00-3
Push Connect Fittings 310-00-5
Specifications 310-00-15
Spring Lock Couplings 310-00-8
Vapor Tube Fittings 310-00-14

Fuel Tank and Lines 310-01-1
Description and Operation 310-01-2
Diagnosis and Testing 310-01-3
Filler Pipe 310-01-8
Filter 310-01-11
Fuel Tank and Lines 310-01-2
310-01-3
Fuel Tank 310-01-3
Inertia Fuel Shutoff (IFS) Switch 310-01-14
Lines 310-01-12
Pump 310-01-7
Removal and Installation 310-01-3
Specifications 310-01-16

H

Hydraulic Brake Actuation 206-06-1
Brake Master Cylinder 206-06-5
Description and Operation 206-06-2
Diagnosis and Testing 206-06-3
Hydraulic Brake System 206-06-2
206-06-3
Pedal and Bracket 206-06-3
Removal and Installation 206-06-3
Specifications 206-06-7

I

Identification Codes 100-01-1
Description and Operation 100-01-2
Identification Codes 100-01-2
Vehicle Certification (VC) Label 100-01-4

Intake Air 303-12-1
Air Cleaner Element 303-12-6
Air Cleaner Outlet Tube 303-12-4
Description and Operation 303-12-2
Diagnosis and Testing 303-12-3
Engine Air Cleaner 303-12-5
Intake Air System 303-12-2
303-12-3
Removal and Installation 303-12-4
Specifications 303-12-7

J

Jacking and Lifting 100-02-1
General Procedures 100-02-2
Jacking 100-02-2
Lifting 100-02-4

Officially Licensed Product
Ford Motor Company

Alphabetical Index

N

Noise, Vibration and Harshness 100-04-1
Accessories Mounting Inspection 100-04-13
Axle Inspection 100-04-13
Description and Operation 100-04-2
Diagnosis and Testing 100-04-5
Definitions 100-04-2
Diagnostic Procedure 100-04-5
Diagnostic Theory 100-04-2
Drive Belt Inspection 100-04-13
Driveshaft Inspection 100-04-13
Driveshaft U-Joint Inspection 100-04-13
Engine / Transmission Mount Neutralizing 100-04-27
Exhaust System Inspection 100-04-14
Exhaust System Neutralizing 100-04-28
General Procedures 100-04-27
Glossary of Terms 100-04-2
Halfshaft Inspection 100-04-14
Hoist Test 100-04-12
How to Use the Diagnostic Procedure 100-04-5
Inspection and Verification 100-04-5
Noise Diagnostic Procedure 100-04-8
Noise, Vibration and Harshness (NVH) 100-04-2
100-04-5
Normal Noise, Vibration and Harshness 100-04-2
Pinpoint Tests 100-04-16
Road Test 100-04-9
Symptom Chart 100-04-14
Tire / Wheel Inspection 100-04-14

P

Parking Brake and Actuation 206-05-1
Bulb — Brake System Warning Indicator 206-05-19
Cable Adjustment 206-05-19
Control 206-05-12
Description and Operation 206-05-2
Diagnosis and Testing 206-05-3
General Procedures 206-05-19
Inspection and Verification 206-05-3
Parking Brake 206-05-2
206-05-3
Pinpoint Tests 206-05-4
Parking Brake and Actuation (Continued)
Removal and Installation 206-05-12
Release Actuator 206-05-18
Specifications 206-05-20
Symptom Chart 206-05-4

Power Brake Actuation 206-07-1
Brake Booster 206-07-2
206-07-3
Description and Operation 206-07-2
Diagnosis and Testing 206-07-3
Power Brake System 206-07-3
Removal and Installation 206-07-3
Specifications 206-07-6

Power Steering 211-02-1
Control Valve Actuator 211-02-18
Description and Operation 211-02-2
Diagnosis and Testing 211-02-6
Electronic Variable Orifice (EVO) System 211-02-4
Gear 211-02-12
Hose 211-02-11
Module 211-02-16
Power Steering Gear Identification 211-02-5
Power Steering Pump 211-02-4
Power Steering 211-02-2
211-02-6
Pulley — Pump 211-02-10
Pump Identification 211-02-6
Pump 211-02-6
Removal and Installation 211-02-6
Specifications 211-02-22
Steering Gear Mounting 211-02-3
Steering Gear 211-02-4
Steering Sensor 211-02-20
System View 211-02-2

R

Rear Disc Brake 206-04-1
Caliper 206-04-4
206-04-13
Description and Operation 206-04-2
Diagnosis and Testing 206-04-4
Disassembly and Assembly 206-04-13

Official Licensed Ford Publication

Alphabetical Index

Rear Disc Brake (Continued)
Pads 206-04-8
Removal and Installation 206-04-4
Rear Disc Brake 206-04-2
206-04-4
Rotor 206-04-10
Specifications 206-04-16
Shield 206-04-12
Support Bracket 206-04-11

Rear Drive Axle/Differential — Ford 8.8-Inch Ring Gear 205-02-1
Axle Identification Tag 205-02-4
Axle 205-02-16
Companion Flange and Pinion Seal 205-02-7
Description and Operation 205-02-2
Diagnosis and Testing 205-02-4
Disassembly and Assembly 205-02-16
In-Vehicle Repair 205-02-5
Removal and Installation 205-02-13
Rear Axle Assembly 205-02-13
Rear Drive Axle and Differential 205-02-2
205-02-4
Specifications 205-02-41
Stub Shaft Pilot Bearing Housing and Seal 205-02-5

Rear Drive Halfshafts 205-05-1
Description and Operation 205-05-2
Diagnosis and Testing 205-05-4
Disassembly and Assembly 205-05-7
Halfshaft Joint 205-05-7
Halfshaft 205-05-5
Removal and Installation 205-05-5
Rear Drive Halfshafts 205-05-2
205-05-4
Specifications 205-05-13

Rear Suspension 204-02-1
Air Suspension System 204-02-3
Arm — Lower 204-02-10
Arm — Upper 204-02-7
Description and Operation 204-02-2
Diagnosis and Testing 204-02-3
Hub 204-02-3
Knuckle 204-02-17
Lug Bolts 204-02-3
Removal and Installation 204-02-3
Rear Spring 204-02-2

Rear Suspension (Continued)
Rear Suspension Arm and Bushings 204-02-2
Rear Suspension Compensator Link 204-02-2
Rear Suspension 204-02-2
204-02-3
Specifications 204-02-25
Shock Absorber 204-02-23
Shock Absorbers 204-02-3
Stabilizer Bar 204-02-3
Sub Frame 204-02-3
Suspension Fasteners 204-02-3

S

Starting System 303-06-1
Component Tests 303-06-24
Description and Operation 303-06-2
Diagnosis and Testing 303-06-5
General Procedures 303-06-28
Individual Cable 303-06-26
Inspection and Verification 303-06-6
Motor Feed Circuit 303-06-25
Motor Ground Circuit 303-06-26
Pinpoint Tests 303-06-11
Removal and Installation 303-06-27
Specifications 303-06-29
Starter Drive/Flywheel Ring Gear Inspection 303-06-28
Starter Motor 303-06-27
Starting System 303-06-2
303-06-5
Symptom Chart 303-06-10
Voltage Drop Tests 303-06-25

Steering — General Information 211-00-1
Air Suspension/Electronic Variable Orifice (EVO) Control Module Diagnostic Trouble Code (DTC) Index 211-00-6
Auto Test 211-00-5
Component Tests 211-00-36
Description and Operation 211-00-2
Diagnosis and Testing 211-00-4
Drive Cycle Diagnostics 211-00-5
EVO Steering Diagnosis 211-00-5
Electronic Variable Orifice (EVO) Power Steering 211-00-3

Ford Motor Company Official Publication

Alphabetical Index

Steering — General Information (Continued)
Final Fill 211-00-44
Functional Tests 211-00-6
General Procedures 211-00-38
Inspection and Verification 211-00-4
Pinpoint Tests 211-00-14
Power Steering Pump Identification 211-00-3
Purging 211-00-40
Specifications 211-00-45
Steering Gear Model Identification 211-00-3
Steering System 211-00-2
Steering 211-00-2
211-00-4
Symptom Chart 211-00-7
System Flushing 211-00-38

Steering Column 211-04-1
Air Bag Sliding Contact 211-04-70
Column 211-04-70
Description and Operation 211-04-2
Diagnosis and Testing 211-04-3
Disassembly and Assembly 211-04-77
Ignition Switch Lock Cylinder 211-04-63
Ignition Switch 211-04-3
Inspection and Verification 211-04-3
Pinpoint Tests 211-04-5
Removal and Installation 211-04-63
Specifications 211-04-86
Steering Column — Tilt / Telescope Motor 211-04-3
Steering Column 211-04-2
211-04-3
211-04-77
Symptom Chart 211-04-4
Tilt / Telescope Motors 211-04-75
Wheel 211-04-67

Steering Column Switches 211-05-1
Component Test 211-05-24
Description and Operation 211-05-2
Diagnosis and Testing 211-05-3
Ignition Switch 211-05-25
Inspection and Verification 211-05-3
Multi-Function Switch 211-05-25
Pinpoint Tests 211-05-7
Removal and Installation 211-05-25
Steering Column Switches 211-05-2
211-05-3

Steering Column Switches (Continued)
Symptom Chart 211-05-7

Suspension Load Leveling Control 204-05-1
Air Compressor 204-05-100
Air Leaks 204-05-119
Air Spring — Rear 204-05-105
Air Spring — Shock Absorber, Front 204-05-108
Air Spring Fill 204-05-118
Air Suspension Control Module Diagnostic Trouble Code (DTC) Index 204-05-8
Control Module — Air Suspension 204-05-105
Description and Operation 204-05-2
Diagnosis and Testing 204-05-6
Drier 204-05-103
General Procedures 204-05-118
Height Sensor 204-05-117
Inspection and Verification 204-05-6
Load Leveling Control, Suspension 204-05-2
Pinpoint Tests 204-05-14
Quick Checks Without NGS Tester 204-05-9
Removal and Installation 204-05-99
Ride Height Adjustments 204-05-119
Specifications 204-05-122
Solenoid Valve 204-05-112
Suspension Load Leveling Control 204-05-6
Switch — Air Suspension 204-05-99
Symptom Chart 204-05-11

Suspension System — General Information 204-00-1
Ball Joint Inspection 204-00-10
Camber and Caster Adjustment — Front 204-00-12
Camber and Caster Adjustment — Rear 204-00-13
Camber 204-00-2
Caster 204-00-2
Component Tests 204-00-10
Description and Operation 204-00-2
Diagnosis and Testing 204-00-6
Dogtracking 204-00-4
Drift / Pull 204-00-5
General Procedures 204-00-12
Inspection and Verification 204-00-6
Nibble 204-00-5
Poor Returnability / Sticky Steering 204-00-5
Ride Height 204-00-3
Specifications 204-00-17
Shimmy 204-00-4

Alphabetical Index

Suspension System — General Information (Continued)
Shock Absorber Inspection 204-00-11
Suspension 204-00-6
Symptom Chart 204-00-7
Toe Adjustment — Front 204-00-14
Toe Adjustment — Rear 204-00-16
Toe 204-00-3
Wander 204-00-4
Wheel Alignment Angles 204-00-2
Wheel Bearing Inspection 204-00-11
Wheel Track 204-00-4

T

Transaxle/Transmission Cooling 307-02-1
Description and Operation 307-02-2
Diagnosis and Testing 307-02-3
General Procedures 307-02-3
Inspection and Verification 307-02-3
Specifications 307-02-3
Symptom Chart 307-02-3
Transmission Cooling 307-02-2
307-02-3
Transmission Fluid Cooler — Backflushing/Cleaning 307-02-3
Transmission Fluid Cooler Flow Test 307-02-3

V

Vehicle Speed Control 310-03-1
Actuator — Speed Control Servo 310-03-22
Actuator Cable — Speed Control 310-03-21
Cable Adjustment 310-03-30

Vehicle Speed Control (Continued)
Description and Operation 310-03-2
Diagnosis and Testing 310-03-3
General Procedures 310-03-30
Inspection and Verification 310-03-3
Pinpoint Tests 310-03-6
Removal and Installation 310-03-21
Specifications 310-03-31
Self-Test Diagnostics 310-03-4
Switch — Deactivator 310-03-28
Switch — Speed Control Actuator 310-03-26
Symptom Chart 310-03-4
Vehicle Speed Control 310-03-2
310-03-3

W

Wheels and Tires 204-04-1
Component Tests 204-04-5
Description and Operation 204-04-2
Diagnosis and Testing 204-04-3
General Procedures 204-04-7
Inspection and Verification 204-04-3
Removal and Installation 204-04-6
Road Test 204-04-3
Specifications 204-04-9
Safety Precautions 204-04-2
Symptom Chart 204-04-4
Tire Runout 204-04-5
Tire and Wheel Runout 204-04-5
Wheel Leaks 204-04-7
Wheel Runout 204-04-5
Wheel and Tire 204-04-6
Wheels and Tires 204-04-2
204-04-3

Official Licensed Product

WE WANT TO HEAR FROM YOU

Your suggestions will help us to improve future editions of this manual.

Instructions:

- Use only one form for each publication
- Use separate form for each concern
- **Do not** use this form to order publications
- Mail the completed form to the address on the reverse side

OR

- FAX the completed form to (313) 390-8727

Date:_____

Publication:

- ☐ Passenger Car Workshop Manual
- ☐ Owner Guide
- ☐ Wiring Diagram
- ☐ Body Repair Manual
- ☐ Truck Workshop Manual
- ☐ PC/ED Manual
- ☐ EVTM

Vehicle Line:_____ **Model Year:**_____

Please check the area in which the concern is located in the publication:

- ☐ Service Information
- ☐ Body
- ☐ Frame and Mounting
- ☐ Engine
- ☐ Suspension
- ☐ Driveline
- ☐ Brakes
- ☐ Transmission/Transaxle
- ☐ Clutch
- ☐ Exhaust
- ☐ Fuel
- ☐ Climate Control
- ☐ Instrumental Warning
- ☐ Battery/Charging
- ☐ Audio
- ☐ Lighting
- ☐ Electrical
- ☐ Schematics
- ☐ Pinpoint Test

Section and Pages:_____

Official Licensed Product
Ford Motor Company

Explain your concern or suggestion below: ***(Please print)***

_____
_____
_____
_____

What do you think is the main cause of your concern?

- ☐ Missing Information
- ☐ Inaccurate Information
- ☐ Incomplete Information

Please tell us who you are: *(Please print)*

Your Name:_____

Company Name:_____

Street:_____

City:_____ **State:**_____ **Zip/Postal Code:**_____

Phone Number:_____ **FAX Number:**_____

Occupation: *(Please mark box)*

- ☐ Ford Dealership Technician
- ☐ Home Mechanic
- ☐ Technician - Other than Ford Dealership
- ☐ Ford Dealership Service Manager
- ☐ Engineer
- ☐ Other:_____

Are there features of this publication that you would like to see changed or expanded?

- ☐ Organization
- ☐ Technical Detail
- ☐ Format and Style
- ☐ Other:_____

How would you suggest we change the publication?

_____
_____
_____

DO NOT STAPLE — USE TRANSPARENT TAPE

NO POSTAGE
NECESSARY
IF MAILED
IN THE
UNITED STATES

BUSINESS REPLY MAIL

FIRST CLASS PERMIT NO. 400 DEARBORN, MI

POSTAGE WILL BE PAID BY ADDRESSEE

Official Licensed Product
Ford Motor Company

Technical Service Publications
Service Manual
P.O. Box 2592
Dearborn, MI 48123-2592

Find us on Facebook

Navigation Tools: Click on the “Table of Contents” below, or use the Bookmarks to the left.

1998 Lincoln Mark VIII
Volume 2 of 2

BISHKO AUTOMOBILE LITERATURE

TABLE OF CONTENTS

INTRODUCTION

GROUP 4 ELECTRICAL

12 Climate Control System

13 Instrumentation and Warning System

14 Battery and Charging System

15 Audio Systems

17 Lighting

18 Electrical Distribution

19 Electronic Feature Group

GROUP 5 BODY AND PAINT

01 Body

02 Frame and Mounting

INDEX

Official Licensed Product Ford Motor Company

All rights reserved. Reproduction by any means, electronic or mechanical, including photocopying, recording, or by any information storage and retrieval system or translation in whole or part is not permitted without written authorization from Ford Motor Company.
Copyright © 1997, Ford Motor Company

INTRODUCTION

NOTE: The descriptions and specifications contained in this manual were in effect at the time this manual was approved for printing. Ford Motor Company reserves the right to discontinue models at any time, or change specifications or design without notice and without incurring any obligation.

IMPORTANT SAFETY NOTICE

Appropriate service methods and procedures are essential for the safe, reliable operation of all motor vehicles as well as the personal safety of the individual doing the work. This manual provides general directions for performing service with tested, effective techniques. Following them will help assure reliability.

There are numerous variations in procedure, techniques, tools and parts for servicing vehicles, as well as in the skill of the individual doing the work. This manual cannot possibly anticipate all such variations and provide advice or cautions as to each. Accordingly, anyone who departs from the instructions provided in this manual must first establish that he compromises neither his personal safety nor the vehicle integrity by his choice of methods, tools or parts.

Official Licensed Product

NOTES, CAUTIONS, AND WARNINGS

As you read through the procedures, you will come across **NOTES**, **CAUTIONS**, and **WARNINGS**. Each one is there for a specific purpose. **NOTES** give you added information that will help you to perform a particular procedure. **CAUTIONS** are given to prevent you from making an error that could damage the vehicle. **WARNINGS** remind you to be especially careful in those areas where carelessness can cause you personal injury. The following list contains some general **WARNINGS** that you should follow when you work on a vehicle.

- **ALWAYS WEAR SAFETY GLASSES FOR EYE PROTECTION.**
- **USE SAFETY STANDS WHENEVER A PROCEDURE REQUIRES YOU TO BE UNDER THE VEHICLE.**
- **MAKE SURE THAT THE IGNITION SWITCH IS ALWAYS IN THE OFF POSITION, UNLESS OTHERWISE REQUIRED BY THE PROCEDURE.**
- **SET THE PARKING BRAKE WHEN WORKING ON THE VEHICLE. IF YOU HAVE AN AUTOMATIC TRANSMISSION, SET IN PARK UNLESS INSTRUCTED OTHERWISE FOR A SPECIFIC OPERATION. IF YOU HAVE A MANUAL TRANSMISSION, IT SHOULD BE IN REVERSE (ENGINE OFF) OR NEUTRAL (ENGINE ON) UNLESS INSTRUCTED OTHERWISE FOR A SPECIFIC OPERATION. PLACE WOOD BLOCKS (4" X 4" OR LARGER) AGAINST THE FRONT AND REAR SURFACES OF THE TIRES TO HELP PREVENT THE VEHICLE FROM MOVING.**
- **OPERATE THE ENGINE ONLY IN A WELL-VENTILATED AREA TO AVOID THE DANGER OF CARBON MONOXIDE POISONING.**
- **KEEP YOURSELF AND YOUR CLOTHING AWAY FROM MOVING PARTS WHEN THE ENGINE IS RUNNING, ESPECIALLY THE DRIVE BELTS.**
- **TO PREVENT SERIOUS BURNS, AVOID CONTACT WITH HOT METAL PARTS SUCH AS THE RADIATOR, EXHAUST MANIFOLD, TAIL PIPE, THREE-WAY CATALYTIC CONVERTER AND MUFFLER.**
- **DO NOT SMOKE WHILE WORKING ON A VEHICLE.**
- **TO AVOID INJURY, ALWAYS REMOVE RINGS, WATCHES, LOOSE HANGING JEWELRY AND LOOSE CLOTHING BEFORE BEGINNING TO WORK ON A VEHICLE.**
- **WHEN IT IS NECESSARY TO WORK UNDER THE HOOD, KEEP HANDS AND OTHER OBJECTS CLEAR OF THE RADIATOR FAN BLADES!**

GROUP

ELECTRICAL 4

SECTION TITLE	PAGE
Climate Control System— General Information	412-00-1
Air Distribution and Filtering	412-01-1
Heating/Defrosting	412-02-1
Air Conditioning	412-03-1
Control Components	412-04-1
Instrument Cluster — General Information	413-00-1
Instrument Cluster — Conventional	413-01-1
Horn	413-06-1
Clock/Timekeeping	413-07-1
Driver Information/Message Center	413-08-1
Gauges and Warning Devices	413-09-1
Charging System — General Information	414-00-1
Battery, Mounting and Cables	414-01-1
Generator and Regulator	414-02-1
Audio Entertainment System — General Information	415-00-1
Receiver and Audio Media Player	415-01-1
Antenna	415-02-1
Speakers	415-03-1
Exterior Lighting	417-01-1
Interior Lighting	417-02-1
Daytime Running Lamps	417-04-1
Module Communications Network	418-00-1
Anti-Theft — Perimeter	419-01A-1
Anti-Theft — PATS	419-01B-1
Remote Convenience	419-02-1
Cellular Phone	419-08-1
Multi-Function Electronic Control Modules	419-10-1
Electronic Compass	419-11-1

Official Licensed Product
Ford Motor Company

SECTION 412-00 Climate Control System — General Information

VEHICLE APPLICATION: Mark VIII

SUBJECT **PAGE**

DESCRIPTION AND OPERATION
Climate Control System 412-00-2
DIAGNOSIS AND TESTING
Climate Control 412-00-11
Component Tests 412-00-104
Inspection and Verification 412-00-15
Pinpoint Tests 412-00-19
Symptom Chart 412-00-17
GENERAL PROCEDURES
A/C Clutch Air Gap Adjustment 412-00-115
Contaminated Refrigerant Handling 412-00-131
Discharging and Recovery 412-00-120
Evacuation and Charging 412-00-123
Flushing 412-00-121
Inspection and Assembly Requirements — Following an A/C Compressor Failure 412-00-129
Leak Detection — Using the Automatic Calibration Halogen Leak Detector 412-00-117
Leak Detection — Using Tracer Dye 412-00-118
Manifold Gauge Set Connection 412-00-116
Refrigerant Identification Testing 412-00-130
Refrigerant Oil Addition 412-00-127
Refrigerant System Filtering After A/C Compressor Replacement 412-00-124
Refrigerant System Tests 412-00-112
Spring Lock Coupling 412-00-107
Vacuum Hose Repair — Mini-Tube 412-00-132
SPECIFICATIONS 412-00-133

Ford Motor Company

DESCRIPTION AND OPERATION

Climate Control System

Cautions and Warnings

⚠ WARNING: TO AVOID ACCIDENTAL DEPLOYMENT AND POSSIBLE INJURY, THE AIR BAG SYSTEM BACKUP POWER SUPPLY MUST BE DEPLETED BEFORE REPAIRING ANY CLIMATE CONTROL COMPONENTS. TO DEPLETE THE BACKUP POWER SUPPLY, DISCONNECT THE BATTERY POSITIVE CABLE AND WAIT ONE MINUTE.

⚠ WARNING: CARBON MONOXIDE IS COLORLESS, ODORLESS AND DANGEROUS. IF IT IS NECESSARY TO OPERATE THE ENGINE WITH VEHICLE IN A CLOSED AREA SUCH AS A GARAGE, ALWAYS USE AN EXHAUST COLLECTOR TO VENT THE EXHAUST GASES OUTSIDE THE CLOSED AREA.

⚠ WARNING: R-134A IS CLASSIFIED AS A SAFE REFRIGERANT, BUT MISUSE CAN MAKE IT DANGEROUS. THE FOLLOWING PRECAUTIONS MUST BE OBSERVED.

- ALWAYS WEAR SAFETY GOGGLES WHEN REPAIRING AN AIR CONDITIONING SYSTEM.
- AVOID CONTACT WITH LIQUID REFRIGERANT R-134A. R-134A VAPORIZES AT APPROXIMATELY -25°C (-13°F) UNDER ATMOSPHERIC PRESSURE AND IT WILL FREEZE SKIN TISSUE.
- NEVER ALLOW REFRIGERANT R-134A GAS TO ESCAPE IN QUANTITY IN AN OCCUPIED SPACE. R-134A IS NON-TOXIC, BUT IT WILL DISPLACE THE OXYGEN NEEDED TO SUPPORT LIFE.
- NEVER USE A TORCH IN AN ATMOSPHERE CONTAINING R-134A GAS. R-134A IS NON-TOXIC AT ALL NORMAL CONDITIONS, BUT WHEN IT IS EXPOSED TO HIGH TEMPERATURES, SUCH AS A TORCH FLAME, IT DECOMPOSES. ONE OF THE PRODUCTS OF THE CHEMICAL BREAKDOWN IS A PHOSGENE GAS, WHICH IS HIGHLY TOXIC.
- DO NOT ALLOW ANY PORTION OF THE CHARGED AIR CONDITIONING SYSTEM TO BECOME TOO HOT. THE PRESSURE IN AN AIR CONDITIONING SYSTEM RISES AS THE TEMPERATURE RISES AND TEMPERATURES OF APPROXIMATELY 85°C (185°F) CAN BE DANGEROUS.
- ALLOW THE ENGINE TO COOL SUFFICIENTLY PRIOR TO PERFORMING MAINTENANCE OR SERIOUS BURNS AND INJURY CAN OCCUR.

⚠ CAUTION: To avoid damaging the vehicle or A/C components, the following precautions must be observed.

- The A/C refrigerant of all vehicles must be identified and analyzed prior to refrigerant charging. Failure to do so can contaminate the shop bulk refrigerant and other vehicles.
- Do not add R-12 refrigerant to an A/C system that requires the use of R-134a refrigerant. These two types of refrigerant must never by mixed. Doing so can damage the A/C system.
- Charge the A/C system with the engine running only at the low-pressure side to prevent refrigerant slugging from damaging the A/C compressor.
- Use only R-134a refrigerant. Due to environmental concerns, when the air conditioning system is drained, the refrigerant must be collected using refrigerant recovery/recycling equipment. R-134a must never be removed without the appropriate equipment or released into the atmosphere. Use of a recovery machine dedicated to R-134a is necessary to reduce the possibility of oil and refrigerant incompatibility concerns. Refer to the instructions provided by the equipment manufacturer when removing refrigerant from or charging the air conditioning system.
- Refrigerant R-134a must not be mixed with the air for leak testing or used with air for any other purpose above atmospheric pressure. R-134a is combustible when mixed with high concentrations of air and higher pressures.

Licensed Product Ford Motor Company

DESCRIPTION AND OPERATION (Continued)

- **A number of manufacturers are producing refrigerant products that are described as direct replacements for Refrigerant R-134a. The use of any unauthorized substitute refrigerant can severely damage the A/C components. If repair is required, use only new or recycled Refrigerant R-134a.**

⚠ **CAUTION: To avoid contaminations of the A/C system:**

- **Never open or loosen a connection before discharging the system.**
- **When loosening a connection, if any residual pressure is evident, allow it to leak out before opening the fitting.**
- **Evacuate a system that has been opened to replace a component or one that has discharged through leakage before charging.**
- **Seal open fitting with a cap or plug immediately after disconnecting a component from the system.**
- **Clean the outside of the fittings thoroughly before disconnecting a component from the system.**
- **Do not remove the sealing caps from a replacement component until ready to install.**
- **Refrigerant oil will absorb moisture from the atmosphere if left uncapped. Do not open an oil container until ready to use, and install the cap immediately after using. Store the oil in a clean, moisture-free container.**
- **Install a new O-ring before connecting an open fitting. Coat the fitting and O-ring with refrigerant oil before connecting.**
- **When installing a refrigerant line, avoid sharp bends. Position the line away from the exhaust or any sharp edges that can chafe the line.**
- **Tighten threaded fittings only to specifications. The steel and aluminum fittings used in the refrigerant system will not tolerate overtightening.**
- **When disconnecting a fitting, use a wrench on both halves of the fitting to prevent twisting of the refrigerant lines or tubes.**
- **Do not open a refrigerant system or uncap a replacement component unless it is as close as possible to room temperature. This will prevent condensation from forming inside a component that is cooler than the surrounding air.**

The electronic automatic temperature control system maintains the selected vehicle interior temperature by heating and/or cooling the air.

- During A/C operation the system also reduces the relative humidity of the air.
- The driver may override the automatic mode of operation.

Principles of Operation

There are four main principles involved with the basic theory of operation:

- Heat transfer
- Latent heat of vaporization
- Relative humidity
- Effects of pressure

Heat Transfer

If two substances of different temperature are placed near each other, the heat in the warmer substance will transfer to the colder substance.

Latent Heat of Vaporization

When a liquid boils (changes to gas) it absorbs heat without raising the temperature of the resulting gas. When the gas condenses (changes back to a liquid), it gives off heat without lowering the temperature of the resulting liquid.

Relative Humidity

The amount of moisture (water vapor content) that the air can hold is directly related to the air temperature. The more heat there is in the air, the more moisture the air can hold. The lower the moisture content in the air, the more comfortable you feel. Removing moisture from the air lowers its relative humidity and improves personal comfort.

Effects of Pressure on Boiling or Condensation

As the pressure is increased on a liquid, the temperature at which the liquid boils (changes to gas) also increases. Conversely, when the pressure on a liquid is reduced, its boiling point is also reduced. When in the gas state, an increase in pressure causes an increase in temperature, while a decrease in pressure will decrease the temperature of the gas.

Official Licensed Product

DESCRIPTION AND OPERATION (Continued)

The Refrigerant Cycle

During stabilized conditions (air conditioning system shutdown), the refrigerant is in a vaporized state and pressures are equal throughout the system. When the A/C compressor is in operation it increases pressure on the refrigerant vapor raising its temperature. The high-pressure and high-temperature vapor is then released into the top of the A/C condenser core.

The A/C condenser core, being close to ambient temperature, causes the refrigerant vapor to condense into a liquid when heat is removed from the refrigerant by ambient air passing over the fins and tubing. The now liquid refrigerant, still at high pressure, exits from the bottom of the A/C condenser core and enters the inlet side of the A/C evaporator core orifice.

The A/C evaporator core orifice is the restriction in the refrigerant system that creates the high pressure buildup upstream of the A/C condenser core and separates the high and low pressure sides of the A/C system. As the liquid refrigerant leaves this restriction, its pressure and boiling point are reduced.

The liquid refrigerant is now at its lowest pressure and temperature. As it passes through the A/C evaporator core, it absorbs heat from the passenger compartment airflow passing over the plate/fin sections of the A/C evaporator core. This addition of heat causes the refrigerant to boil (change to gas). The now cooler passenger compartment air can no longer support the same humidity level of the warmer air and this excess moisture condenses on the exterior of the evaporator coils and fins and drains outside the vehicle.

The suction accumulator/drier is designed to remove moisture from the refrigerant and to prevent any liquid refrigerant that may not have been vaporized in the evaporator core from reaching the A/C compressor. The A/C compressor is designed to pump refrigerant vapor only, as liquid refrigerant will not compress and can damage the A/C compressor.

The refrigerant cycle is now repeated with the A/C compressor again increasing the pressure and temperature of the refrigerant.

The A/C cycling switch interrupts compressor operation before the external temperature of the A/C evaporator core gets low enough to cause the condensed water vapor (excess humidity) to turn to ice. It does this by monitoring low side line pressure. It is known that a refrigerant pressure of approximately 210 kPa (30 psi) will yield an operating temperature of 0°C (32°F). The A/C cycling switch controls system operation in an effort to maintain this temperature.

The high side line pressure is also monitored so that A/C compressor operation can be interrupted if system pressure becomes too high.

The A/C compressor relief valve will open and vent refrigerant to relieve unusually high system pressure.

Uncontrolled Copy Ford Motor Company

DESCRIPTION AND OPERATION (Continued)

Clutch Cycling Orifice Tube Type Refrigerant System

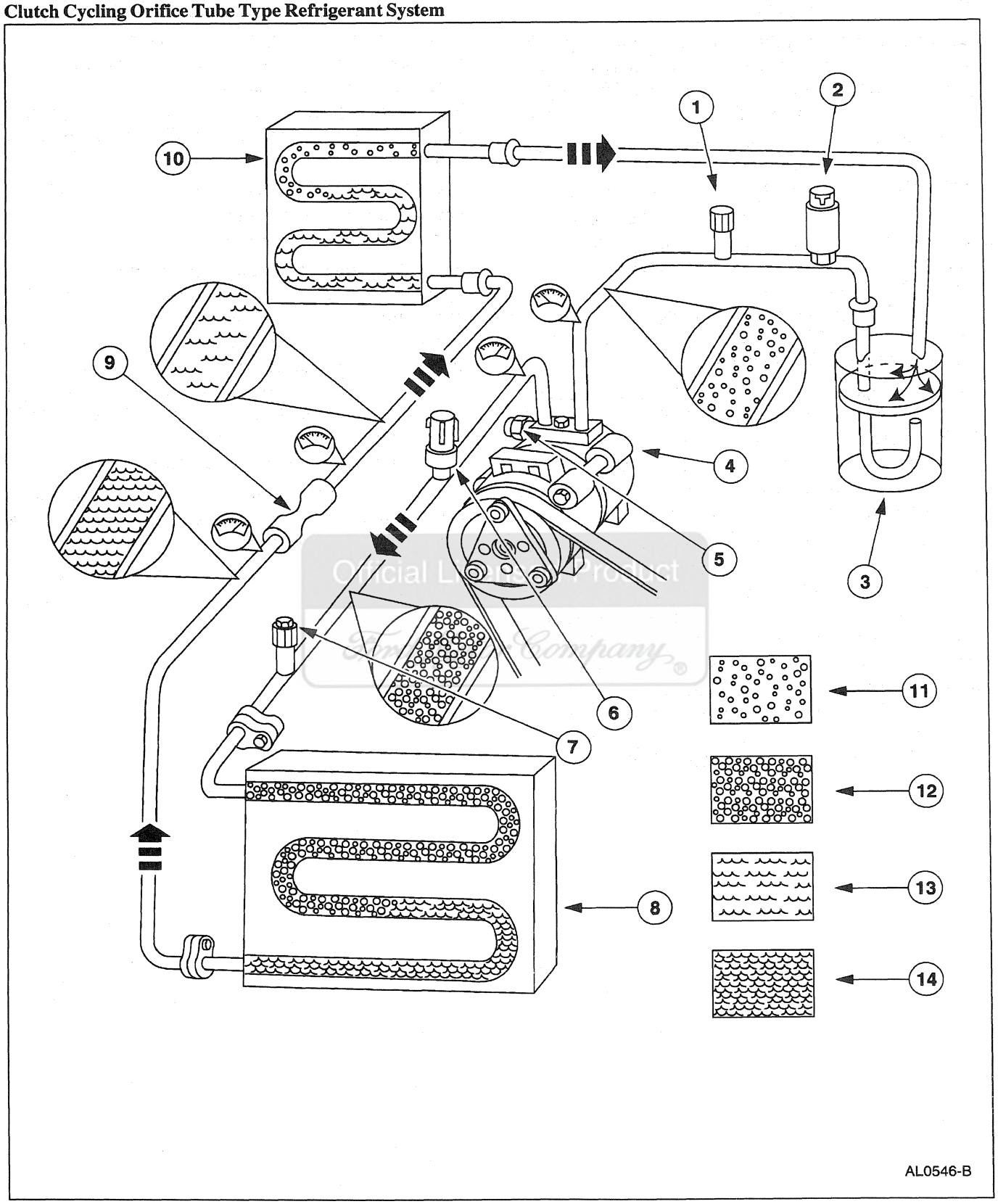

DESCRIPTION AND OPERATION (Continued)

Item	Part Number	Description
1	19E762	A/C Charge Valve Port (Low Side)
2	19E561	A/C Cycling Switch
3	19C836	Suction Accumulator/Drier
4	19703	A/C Compressor
5	19D644	A/C Compressor Pressure Relief Valve
6	19D594	A/C Pressure Cut-Off Switch
7	19E762	A/C Charge Valve Port (High Side)

(Continued)

Item	Part Number	Description
8	19712	A/C Condenser Core
9	19D990	A/C Evaporator Core Orifice
10	19860	A/C Evaporator Core
11	—	Low Pressure Vapor
12	—	High Pressure Vapor
13	—	Low Pressure Liquid
14	—	High Pressure Liquid

System Air Flow Description

MAX A/C

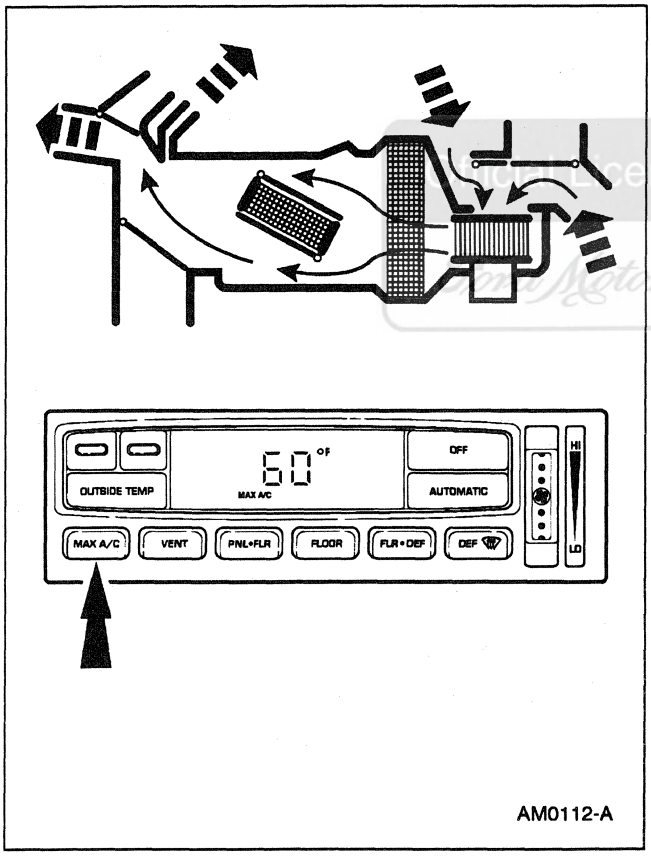

When MAX A/C is selected:

- The air inlet duct doors are at full vacuum, closing off outside air and admitting only recirculated air.
- The windshield defroster door is at full vacuum and the heater air damper door is in the no vacuum position, directing airflow to the A/C registers (19893).
- The temperature will be set for maximum cold (60°F) but may be adjusted if desired.
- Air will be picked up at the recirc opening by the blower motor (18527). With the A/C control set for maximum cold, airflow across the A/C evaporator core (19860) will be diverted past the heater core (18476) and then directed into the passenger compartment through the instrument panel A/C registers. There is also some airflow to the A/C side window demisters.
- The A/C compressor (19703) will be enabled when MAX A/C is selected.
- The blower motor is on.

Ford Licensed Product

DESCRIPTION AND OPERATION (Continued)

Vent

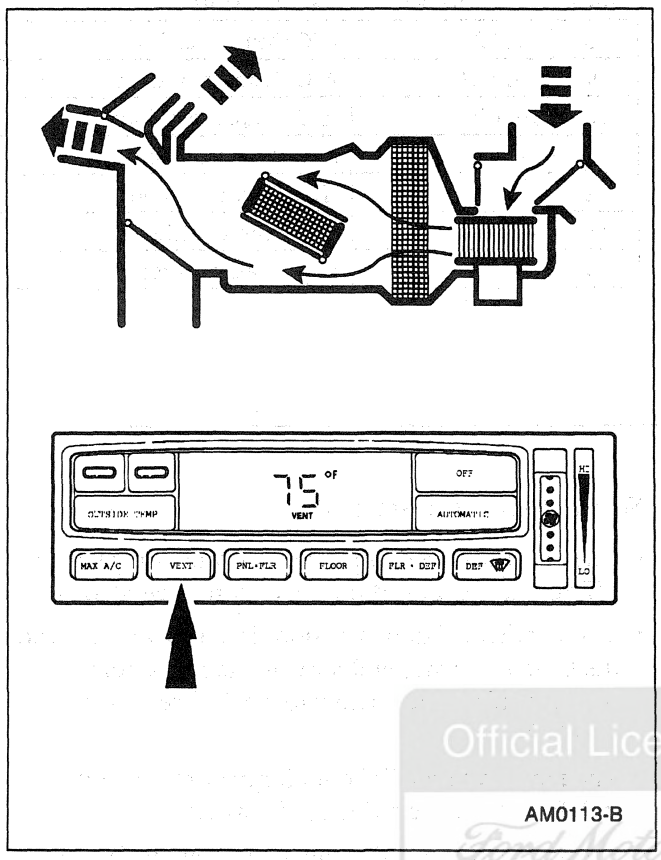

AM0113-B

When VENT is selected:

- The air inlet duct doors, with no vacuum being applied, will block recirculated air and admit outside air. From there, air flows through the system to the instrument panel A/C registers.
- The heater air damper door is in the no vacuum position and the windshield defroster door is at the full vacuum position, directing air flow to the A/C register.
- There is also some air flow to the A/C side window demisters.
- The temperature can be adjusted to heat the air but air cannot be cooled below outside temperature.
- The blower motor is on.
- The A/C compressor (19D629) will be disabled when VENT is selected.

OFF

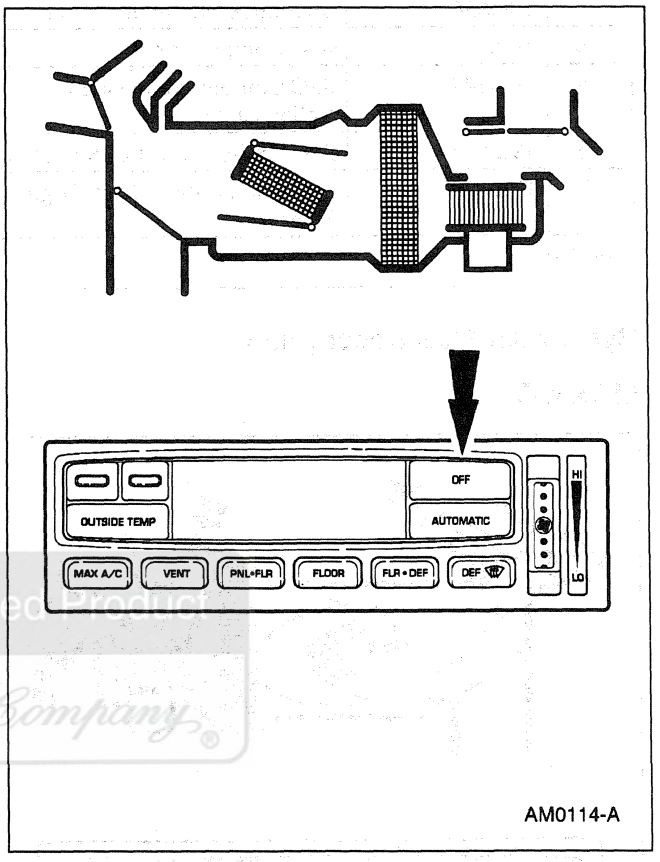

AM0114-A

When OFF is selected:

- The A/C inlet duct doors are at full vacuum, closing off outside air and admitting only recirc air.
- The heater air damper door and the windshield defroster door are at no vacuum, closing of the passages to the A/C registers.
- The blower motor and A/C compressor are off.
- The control display will be blank.

Official Licensed Product
Ford Motor Company

DESCRIPTION AND OPERATION (Continued)

PANEL/FLOOR

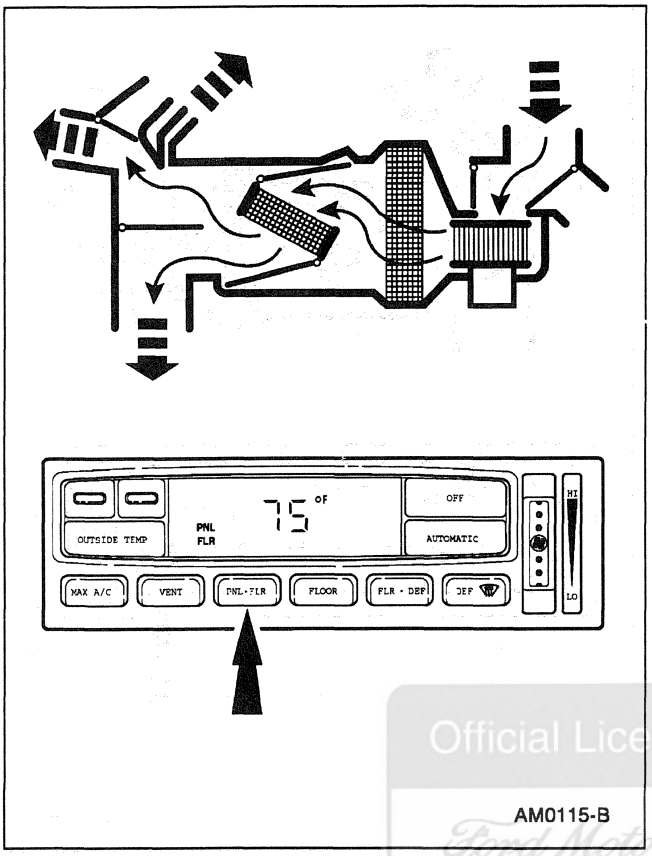

When PANEL/FLOOR is selected:

- The air inlet duct doors are set at no vacuum, blocking the recirc passage and admitting outside air.
- The heater air damper door is in the partial vacuum position, allowing airflow to both the heater outlet floor duct (18C433) and the heater air plenum chamber.
- The windshield defroster door is at full vacuum, closing of airflow to the windshield defroster hose nozzle (18490) and directing airflow to the A/C registers. There is also some air flow to the A/C side window demisters.
- The A/C compressor will be enabled when PANEL/FLOOR is selected.
- The blower motor is on.

FLOOR

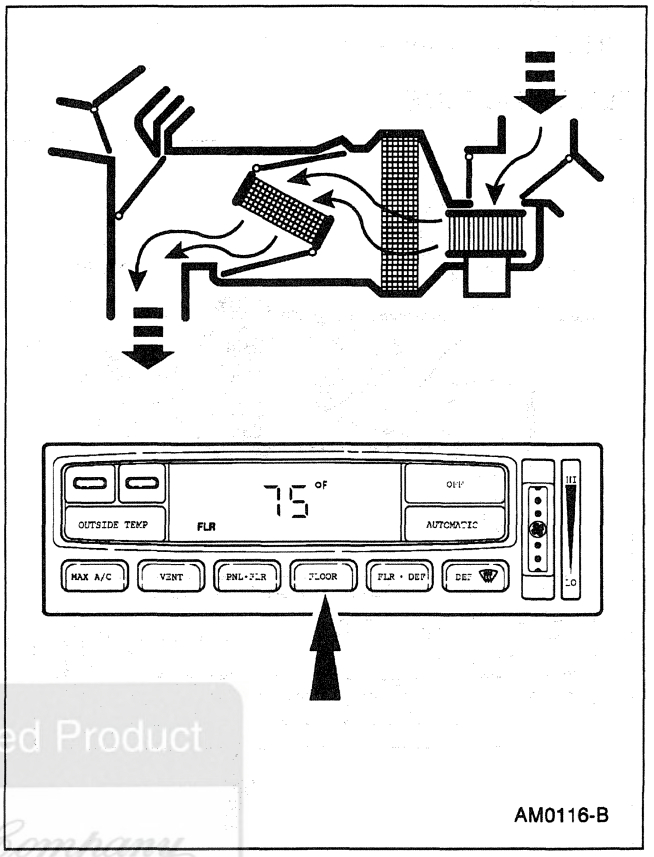

When FLOOR is selected:

- The air inlet duct doors are in the no vacuum position, blocking recirc air and admitting outside air.
- The heater air damper door is in the full vacuum position, directing all air flow to the heater outlet floor duct.
- The temperature can be adjusted to mix air flowing through and around the heater core to achieve the desired temperature level.
- The windshield defroster door is in the no vacuum position, blocking air circulation to the panel A/C registers.

Official Licensed Product
Ford Motor Company

DESCRIPTION AND OPERATION (Continued)

- The A/C compressor will be disabled when FLOOR is selected.
- The blower motor is on.

FLOOR/DEFROST

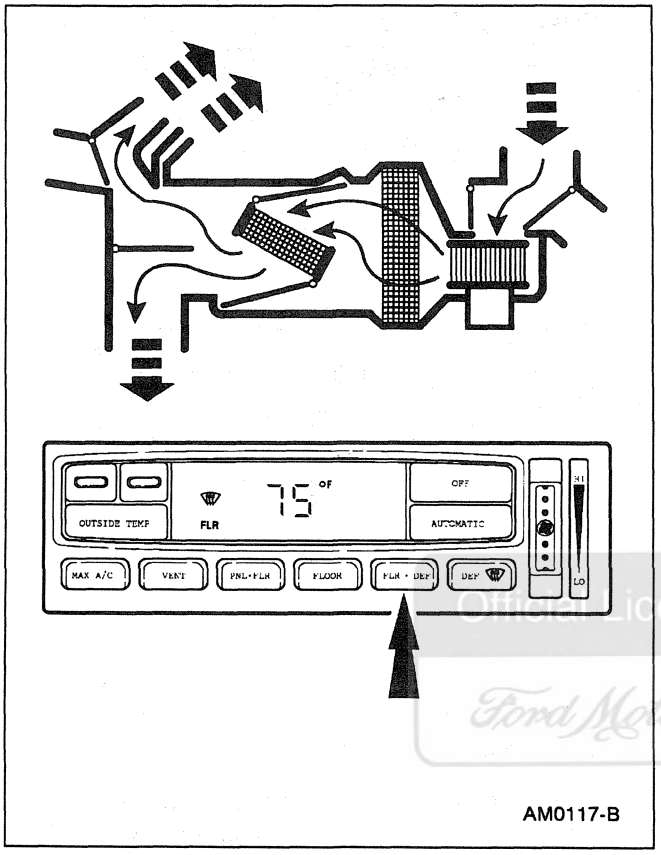

AM0117-B

When FLOOR/DEFROST is selected:

- The air inlet duct door is in the no vacuum position blocking recirc air and admitting outside air.
- The windshield defroster door is in the no vacuum position directing airflow to the windshield defroster hose nozzle.
- The heater air damper door is in the partial vacuum position, allowing airflow to both the heater air plenum chamber and the heater outlet floor duct.
- The A/C compressor will be enabled when FLOOR/DEFROST is selected to dehumidify the air and reduce windshield fogging.
- The blower motor is on.

DEFROST

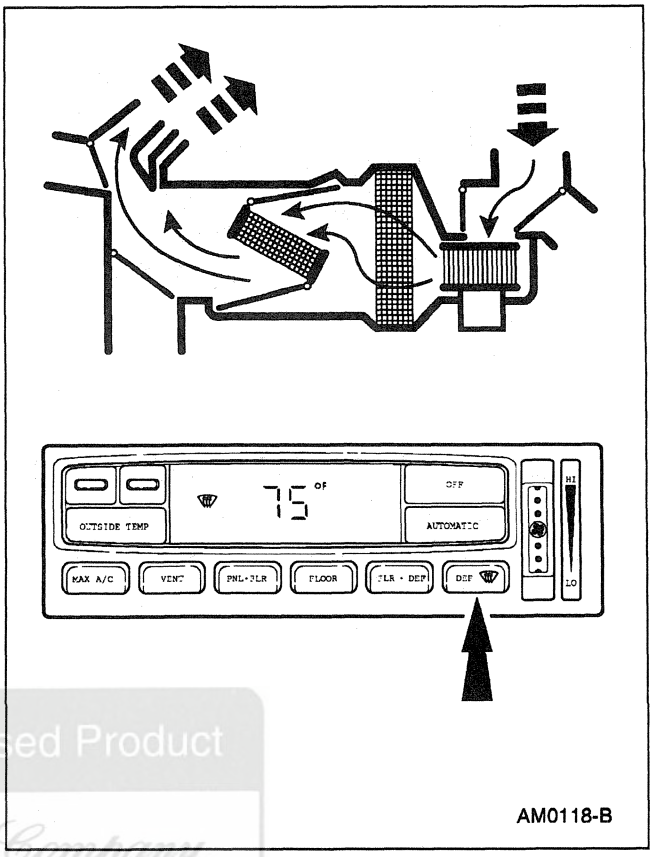

AM0118-B

When DEFROST is selected:

- The air inlet duct doors are in the no vacuum position, admitting outside air.
- Both the windshield defroster door and the heater air damper door are in the no vacuum position so that most of the incoming air is directed to the windshield defroster hose nozzle. There is also airflow to the A/C side window demisters.
- The temperature setting will determine the amount of air that is directed through the heater core and the amount that bypasses the heater core.
- The A/C compressor will be enabled when DEFROST is selected to dehumidify the air and reduce windshield fogging.
- The blower motor is on.

Officially Licensed Product
Ford Motor Company

DESCRIPTION AND OPERATION (Continued)

Climate Control System Electrical Components

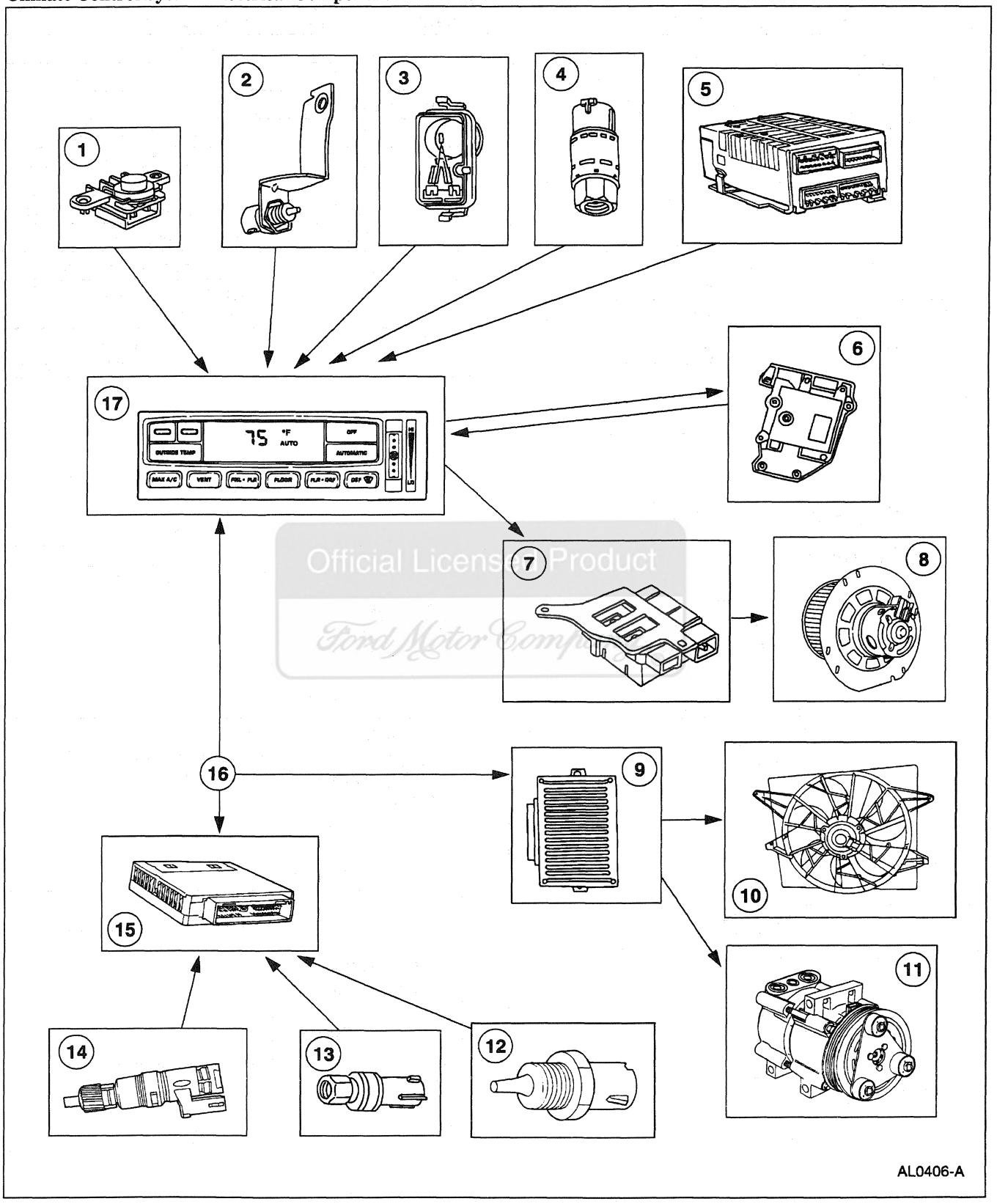

Official Licensed Product
Ford Motor Company

DESCRIPTION AND OPERATION (Continued)

Item	Part Number	Description
1	19E663	A/C Sunload Sensor
2	19E702	A/C Ambient Air Temperature Sensor and Bracket
3	19D888	Automatic Temperature Control Sensor Hose and Elbow
4	19E561	A/C Cycling Switch
5	—	Steering Column/Ignition/Lighting (SCIL) Control Module (Illumination)
6	19E616	A/C Electronic Door Actuator Motor
7	19E624	A/C Blower Motor Speed Control

(Continued)

Item	Part Number	Description
8	18527	Blower Motor
9	12B577	Variable Load Control Module
10	8C607	Fan Motor
11	2987	A/C Clutch Field Coil
12	12A648	Engine Coolant Temperature Sensor
13	19D594	A/C Pressure Cut-Off Switch
14	9E731	Vehicle Speed Sensor
15	12A650	Powertrain Control Module
16	—	J1850 Communication Network
17	19980	Electronic Automatic Temperature Control Module

DIAGNOSIS AND TESTING

Climate Control

Refer to Electrical and Vacuum Troubleshooting Manual, Cell 55, Electronic Automatic Temperature Control (EATC) for schematic and connector information.

Official Licensed Product Ford Motor Company

Special Tool(s)

ST1137-A	Rotunda 73 Digital Multimeter 105-R0051 or equivalent
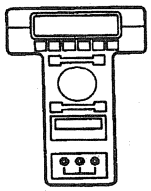 ST1217-A	New Generation Star (NGS) Tester 418-F048 (007-00500) or equivalent

(Continued)

Special Tool(s)

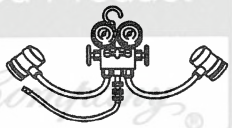 ST1928-A	R-134a Manifold Gauge Set 176-R032A or equivalent
ST1176-A	Vacuum Pump 416-D002 (D95L-7559-A) or equivalent
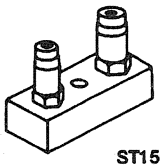 ST1501-A	A/C Pressure Test Adapter 412-093 (T94P-19623-E)

(Continued)

DIAGNOSIS AND TESTING (Continued)

Special Tool(s)

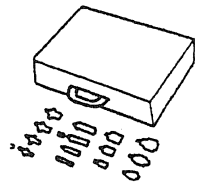 ST1252-A	R-12/R-134a Air Conditioning Test Fitting Set 412-DS028 (014-00333) or equivalent
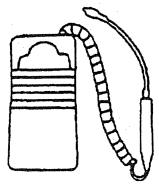 ST1245-A	Automatic Calibration Halogen Leak Detector 023-R1003 or equivalent

Special Tool(s)

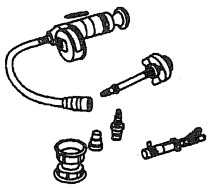 ST1474-A	Radiator/Heater Core Pressure Tester 014-R1072 or equivalent
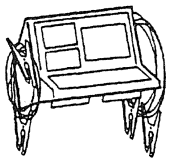 ST1179-A	Alternator, Regulator, Battery and Starter Tester (ARBST) 010-00725 or equivalent

(Continued)

Official Licensed Product
Ford Motor Company

DIAGNOSIS AND TESTING (Continued)

Vacuum Schematic—Electronic Automatic Temperature Control

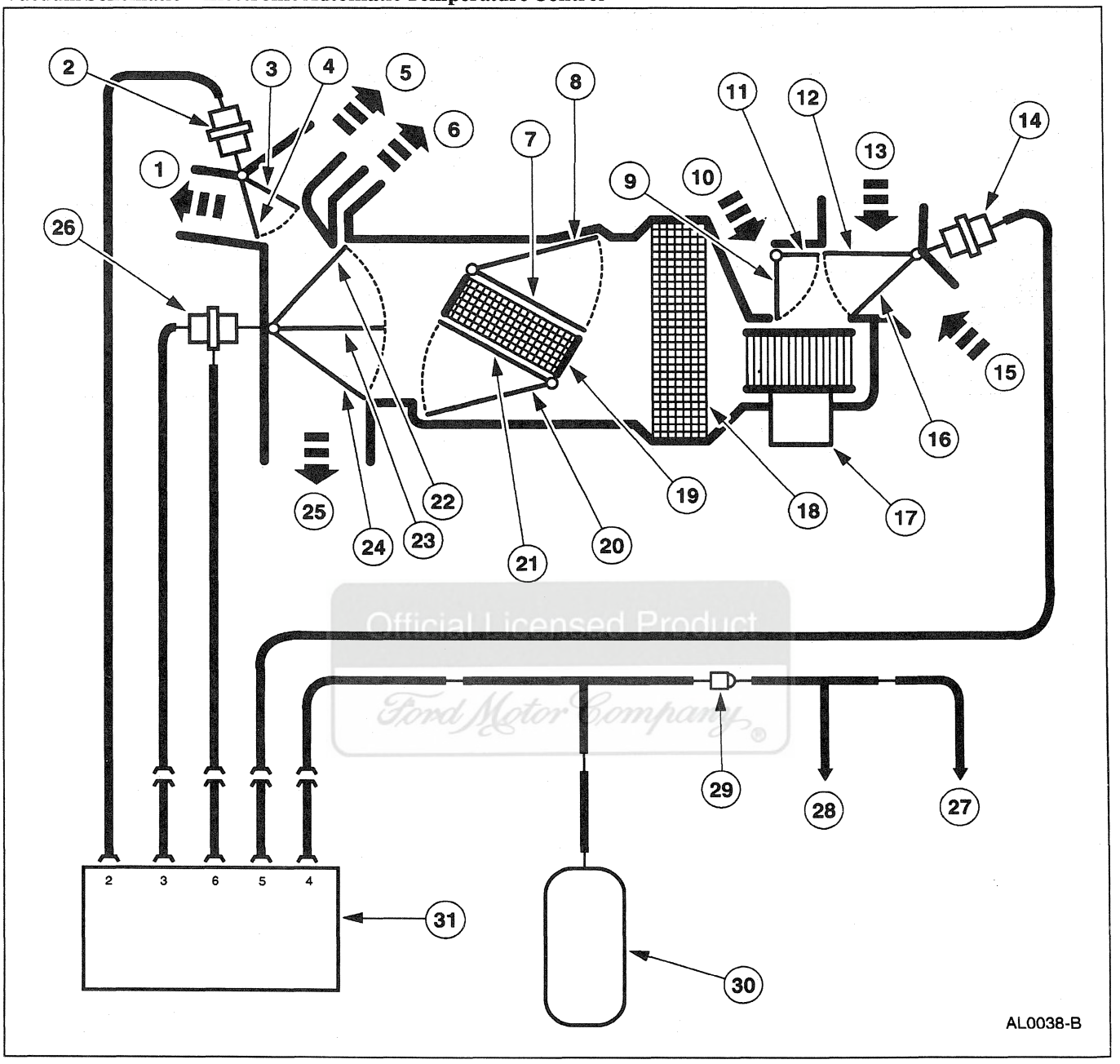

Official Licensed Product
Ford Motor Company

Item	Part Number	Description
1	—	Panel Vent Air Flow
2	18A318	Vacuum Control Motor (Windshield Defroster Door)
3	—	Windshield Defroster Door (Full Vacuum Position)
4	—	Windshield Defroster Door (No Vacuum Position)
5	—	Defrost Air Flow

(Continued)

Item	Part Number	Description
6	—	Side Window Demister Air Flow
7	—	Primary Air Temperature Control Door (Full Cool Position)
8	—	Primary Air Temperature Control Door (Full Hot Position)

(Continued)

DIAGNOSIS AND TESTING (Continued)

Item	Part Number	Description
9	—	Secondary Air Inlet Duct Door (No Vacuum Position)
10	—	Recirc Air Inlet
11	—	Secondary Air Inlet Duct Door (Full Vacuum Position)
12	—	Primary Air Inlet Duct Door (Full Vacuum Position)
13	—	Outside Air Inlet
14	18A318	Vacuum Control Motor (Air Inlet Duct Doors)
15	—	Recirc Air Inlet
16	—	Primary Air Inlet Duct Door (No Vacuum Position)
17	18527	Blower Motor
18	19860	A/C Evaporator Core
19	18476	Heater Core
20	—	Secondary Air Temperature Control Door (Full Hot Position)

(Continued)

Item	Part Number	Description
21	—	Secondary Air Temperature Control Door (Full Cool Position)
22	—	Heater Air Damper Door (Full Vacuum Position)
23	—	Heater Air Damper Door (Partial Vacuum Position)
24	—	Heater Air Damper Door (No Vacuum Position)
25	—	Floor Airflow
26	18A318	Vacuum Control Motor (Heater Air Damper Door)
27	—	To Engine Intake Manifold
28	—	To Emission Control
29	19A563	A/C Vacuum Check Valve
30	19A566	A/C Vacuum Reservoir Tank and Bracket
31	19980	Electronic Automatic Temperature Control Module

Official Licensed Product Ford Motor Company

Vacuum Connector End View — Electronic Automatic Temperature Control

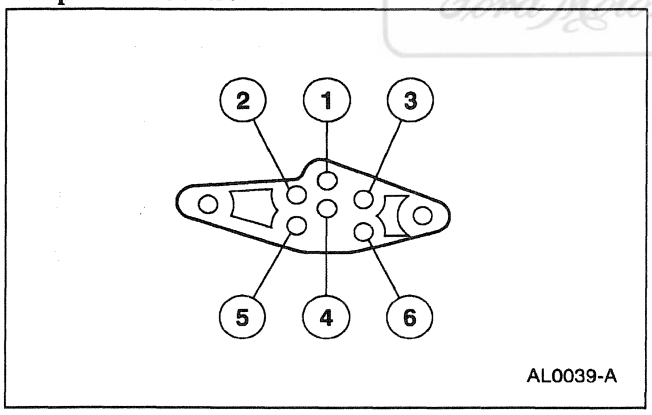

Port Number	Circuit	Circuit Function
1	—	Not Used
2	Yellow	Windshield Defroster Door
3	Blue	Heater Air Damper Door
4	Black	Source Vacuum
5	White	A/C Air Inlet Duct Door
6	Red	Heater Air Damper Door

VACUUM APPLICATION CHART — ELECTRONIC AUTOMATIC TEMPERATURE CONTROL

Vacuum Harness Hose Color	Function	Manual Override Selector Buttons						
		OFF	MAX A/C	VENT	PNL & FLR	FLOOR	FLR & DEF	DEFROST
White	Outside-Recirc	V	V	NV	NV	NV	NV	NV
Red	Full Floor	NV	NV	NV	NV	V	NV	NV

(Continued)

DIAGNOSIS AND TESTING (Continued)

VACUUM APPLICATION CHART — ELECTRONIC AUTOMATIC TEMPERATURE CONTROL

Vacuum Harness Hose Color	Function	Manual Override Selector Buttons						
		OFF	MAX A/C	VENT	PNL & FLR	FLOOR	FLR & DEF	DEFROST
Blue	Floor-Panel (Partial)	NV	NV	NV	V	V	V	NV
Yellow	Panel-Defrost	NV	V	V	V	NV	NV	NV
Black	Source	V	V	V	V	V	V	V

V = vacuum
NV = no vacuum

Inspection and Verification

1. Verify the customer's concern by operating the climate control system to duplicate the condition.
2. Inspect to determine if one of the following mechanical or electrical concerns apply:

Visual Inspection Chart

Mechanical	Electrical
• Loose, missing or damaged A/C compressor drive belt. • Loose or disconnected A/C clutch. • Loose, misrouted or damaged vacuum lines [a]. • Broken or leaking vacuum control motor. • Broken or leaking refrigerant lines. • Obstructed in-car temperature sensor.	• Open fuses. • Blower motor inoperative. • A/C compressor inoperative. • Cooling fan inoperative. • Circuitry open/shorted. • Disconnected electrical connectors.

a A leak in the vacuum control circuit will send all airflow to the defroster outlets. This condition may occur during acceleration (slow leak), may exist at all times (large leak), and may exist only when specific functions are selected (indicating a leak in that portion of the circuit). The vacuum hoses used in the passenger compartment control circuit are constructed from PVC plastic material. The vacuum hoses used in the engine compartment are constructed of Hytrel®. Because of the materials used, never pinch the vacuum hoses off during diagnosis to locate a leak. A wood golf tee can be used as a plug when it is necessary to plug one end of the vacuum hose for leak test purposes.

3. If the inspection reveals obvious concern(s) that can be readily identified, service as required.
4. If the concern remains after the inspection, connect the New Generation Star (NGS) Tester to the data link connector (DLC) located beneath the instrument panel to perform the DATA LINK DIAGNOSTICS test. If the NGS responds with NO RESPONSE/NOT EQUIPPED for the electronic automatic temperature control module, go to Pinpoint Test A. If the DATA LINK DIAGNOSTICS test is passed for the electronic automatic temperature control module, retrieve the continuous DTCs and execute the Self Test Diagnostics for the electronic automatic temperature control module to retrieve the current DTCs. This is the only way DTC's related to the ECT and vehicle speed can be retrieved.
5. If the self test is passed and no DTCs are retrieved, go to the Symptom Chart to continue diagnostics.
6. If DTCs are retrieved, go to the Electronic Automatic Temperature Control (EATC) Module Diagnostic Trouble Code (DTC) Index to continue diagnostics.
7. If the electronic automatic temperature control module cannot be accessed by the NGS, go to Pinpoint Test A.

Electronic Automatic Temperature Control Module Self-Test

- The EATC module self-test will not detect concerns associated with data link messages like engine coolant temperature or vehicle speed signals. A NGS tester must be used to retrieve these concerns.

Official Licensed Publication

DIAGNOSIS AND TESTING (Continued)

- The EATC module self-test will detect concerns in the system control functions and will display hard diagnostic trouble codes (DTC) in addition to intermittent diagnostic trouble codes for concerns that occur during system operation. The vehicle interior temperature should be between 4°-32°C (40-90°F) when performing the self-test. If the temperatures are not within the specified ranges, false in-car temperature sensor DTCs will be displayed.
- The self-test can be initiated at any time. Normal operation of the system stops when the self-test is activated.
- To enter the self-test, press the OFF and FLOOR buttons simultaneously and then press the AUTOMATIC button within two seconds. The display will show a pulse tracer going around the center of the display window. The test may run as long as 30 seconds. Record all DTCs displayed.
- If any DTCs appear during the self-test, follow the diagnostics procedure given under ACTION for each DTC given.
- If a condition exists but no DTCs appear during the self-test, refer to the Symptom Chart Condition: The EATC System Is Inoperative, Intermittent or Improper Operation.
- To exit self-test and retain all intermittent DTCs, push the blue (cooler) button. The control will exit self-test, retain all intermittent diagnostic trouble codes and then turn OFF (display blank).
- To exit self-test and clear all diagnostic trouble codes, press the DEFROST button. The vacuum fluorescent display window will show 888 and all function symbols for one second. Then, the EATC control assembly will turn OFF (display blank) and all DTCs will be cleared.

Always exit the self-test before powering the system down (system turned OFF).

- Intermittent DTCs will be deleted after 80 ignition switch ON cycles after the intermittent condition occurs.

Official Licensed Product Ford Motor Company

ELECTRONIC AUTOMATIC TEMPERATURE CONTROL (EATC) MODULE DIAGNOSTIC TROUBLE CODE (DTC) INDEX

NGS DTC	EATC (Hard) Self-Test Faults	EATC (Intermittent) Run-Time Faults	Description	Action to Take
B1249	024	022 025	Blend Door Short Blend Door Failure	GO to DTC B1249.
B1251	031	N/A	A/C In-Car Temperature Sensor Open Circuit	GO to DTC B1251.
B1253	030	N/A	A/C In-Car Temperature Sensor Short to Ground	GO to DTC B1253.
B1255	041	043	A/C Ambient Temperature Sensor Open Circuit	GO to DTC B1255.
B1257	040	042	A/C Ambient Temperature Sensor Short to Ground	GO to DTC B1257.
B1261	050	052	A/C Solar Radiation Sensor Circuit Short to Ground	GO to DTC B1261.
U1041	N/A	N/A	SCP Invalid or Missing Data for Function Read Vehicle Speed	Refer to Powertrain Control/Emissions Diagnosis Manual [1].
U1073	N/A	N/A	SCP Invalid or Missing Data for Engine Coolant	Refer to Powertrain Control/Emissions Diagnosis Manual [1].

(Continued)

1 Can be purchased as a separate item.

DIAGNOSIS AND TESTING (Continued)

ELECTRONIC AUTOMATIC TEMPERATURE CONTROL (EATC) MODULE DIAGNOSTIC TROUBLE CODE (DTC) INDEX

NGS DTC	EATC		Description	Action to Take
	(Hard) Self-Test Faults	(Intermittent) Run-Time Faults		
U1222	N/A	N/A	SCP Invalid or Missing Data for Interior Lamps	GO to Section 417-02, Inspection and Verification to continue diagnosis.
U1235	N/A	N/A	SCP Invalid or Missing Data for Displays	Invalid code. Do not service.

Symptom Chart

SYMPTOM CHART

Condition	Possible Source	Action
• No Communication With the Electronic Automatic Temperature Control Module	• Circuitry short/open. • EATC module communication network.	• GO to Pinpoint Test A.
• The EATC System is Inoperative, Intermittent or Improper Operation	• Circuitry open/shorted. • Input sensor(s)/erratic input signals. • Charging system. • Automatic temperature control sensor hose and elbow.	• GO to Pinpoint Test B.
• Improper/Erratic Direction of Air Flow from Outlets	• No vacuum to the A/C control. • A/C control leaks vacuum. • Kinked/pinched vacuum hose. • Air flow door binding/stuck/broken. • Leaking vacuum control motor. • Mode selection buttons. • Leaking A/C vacuum check valve. • Leaking A/C vacuum reservoir tank and bracket. • Vacuum actuator arm not connected to the door crank.	• GO to Pinpoint Test C.
• Insufficient, Erratic, or No Heat	• Low engine coolant level. • Engine overheating. • Blend door binding/stuck/broken. • Plugged or partially plugged heater core. • Inoperative A/C electric blend door actuator. • Blend door circuitry open/shorted.	• GO to Pinpoint Test D.
• The A/C Does Not Operate/Does Not Operate Properly	• Open fuse. • Variable Load Control Module. • Circuitry short/open. • A/C cycling switch. • A/C system discharged/low charge. • A/C control.	• GO to Pinpoint Test E.

Original Equipment Product Motorcraft Company

DIAGNOSIS AND TESTING (Continued)

SYMPTOM CHART (Continued)

Condition	Possible Source	Action
• A/C Always On	• Circuitry short/open. • A/C cycling switch. • A/C control. • Variable Load Control Module.	• REFER to Powertrain Control/Emissions Diagnosis Manual [2].
• Insufficient A/C Cooling	• Restricted A/C evaporator core orifice. • Blend door actuator control. • Low refrigerant level. • Inoperative A/C cycling switch. • A/C cycling switch.	• GO to Pinpoint Test F.
• The Blower Motor Does Not Operate	• Circuitry open/shorted. • Blower motor. • A/C blower motor speed control. • Blower relay.	• GO to Pinpoint Test G.
• The Blower Motor Operates Continuously in High Speed	• A/C blower motor speed control. • EATC module.	• GO to Pinpoint Test H.
• No Operation In Some Blower Settings	• A/C blower motor speed control. • EATC module. • Blower motor.	• GO to Pinpoint Test J.
• The Temperature Set Point Does Not Repeat After Turning the Ignition Switch Off	• Open fuse. • Circuitry short/open. • EATC module.	• GO to Pinpoint Test K.
• The Temperature Display Will Not Switch Between Celsius and Fahrenheit	• Circuitry short/open. • EATC module.	• GO to Pinpoint Test L.

Officially Licensed Product Ford Motor Company

2 Can be purchased as a separate item.

DIAGNOSIS AND TESTING (Continued)

Pinpoint Tests

DTC B1249: BLEND DOOR FAILURE

TEST CONDITIONS	TEST DETAILS/RESULTS/ACTIONS
B1249-1 CHECK THE ACTUATOR CLOCKWISE OPERATION (FULL COOL)	
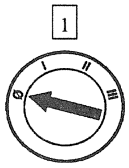 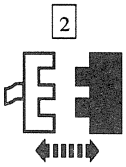 EATC Module C272 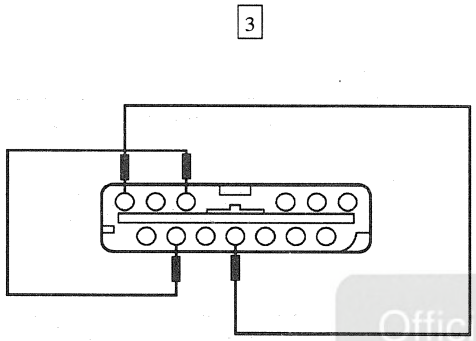 AL0175-B	3 Connect a jumper lead between the EATC module connector Pins C272-13, Circuit 245 (BR/LG) and C272-24, Circuit 973 (R). Connect a second jumper lead between the EATC module connector Pins C272-26, Circuit 246 (P) and C272-11, Circuit 57 (BK). • Does the blend door actuator motor drive clockwise? → **Yes** GO to **B1249-2**. → **No** GO to **B1249-3**.
B1249-2 CHECK THE ACTUATOR COUNTERCLOCKWISE OPERATION (FULL HOT)	
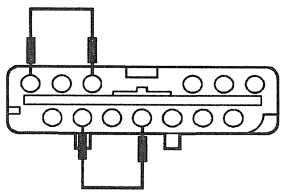 AL0040-B	1 Connect a jumper lead between the EATC module connector Pins C272-26, Circuit 246 (P) and C272-24, Circuit 973 (R). Connect a second jumper lead between the EATC module connector Pins C272-13, Circuit 245 (BR/LG) and C272-11, Circuit 57 (BK). • Does the blend door actuator motor drive counterclockwise? → **Yes** GO to **B1249-8**. → **No** GO to **B1249-3**.

Official Licensed Product Ford Motor Company

(Continued)

DIAGNOSIS AND TESTING (Continued)

DTC B1249: BLEND DOOR FAILURE (Continued)

TEST CONDITIONS	TEST DETAILS/RESULTS/ACTIONS
B1249-3 CHECK CIRCUIT 246 (P) FOR A SHORT	
1 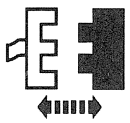 Electronic Blend Door Actuator C224 2 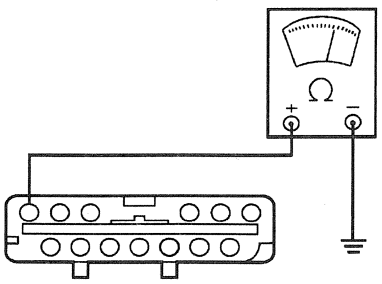 AL0041-B	2 Measure the resistance between the EATC module connector Pin C272-26, Circuit 246 (P) and ground. • Is the resistance greater than 10,000 ohms? → **Yes** GO to **B1249-4**. → **No** REPAIR Circuit 246 (P) for a short to ground. TEST the system for normal operation.
B1249-4 CHECK CIRCUIT 245 (BR/LG) FOR A SHORT	
1 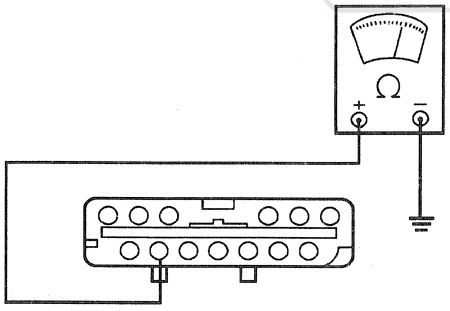 AL0042-B	1 Measure the resistance between the EATC module connector Pin C272-13, Circuit 245 (BR/LG) and ground. • Is the resistance greater than 10,000 ohms? → **Yes** GO to **B1249-5**. → **No** REPAIR Circuit 245 (BR/LG) for a short to ground. TEST the system for normal operation.

Official Licensed Product
Ford Motor Company

(Continued)

DIAGNOSIS AND TESTING (Continued)

DTC B1249: BLEND DOOR FAILURE (Continued)

TEST CONDITIONS	TEST DETAILS/RESULTS/ACTIONS
B1249-5 CHECK CIRCUIT 246 (P) FOR AN OPEN	
1 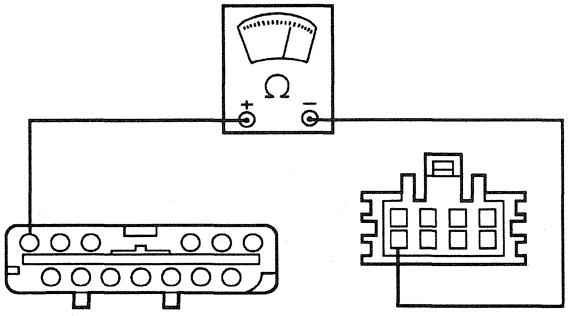 AL0043-B	1 Measure the resistance between the EATC module connector Pin C272-26, Circuit 246 (P) and the electric blend door actuator connector Pin C224-8. • Is the resistance less than 5 ohms? → **Yes** GO to **B1249-6**. → **No** REPAIR Circuit 246 (P) for an open. TEST the system for normal operation.
B1249-6 CHECK CIRCUIT 245 (BR/LG) FOR AN OPEN	
1 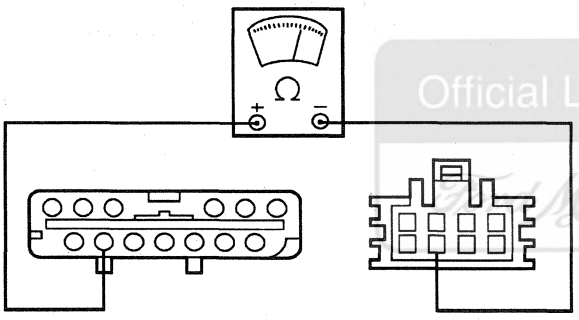 AL0044-B	1 Measure the resistance between the EATC connector Pin C272-13, Circuit 245 (BR/LG) and the electric blend door actuator connector Pin C224-7. • Is the resistance less than 5 ohms? → **Yes** GO to **B1249-7**. → **No** REPAIR Circuit 245 (BR/LG) for an open. TEST the system or normal operation.
B1249-7 CHECK THE ACTUATOR OPERATION	
2 Electric Blend Door Actuator C224	1 Remove the electronic blend door actuator; refer to Section 412-04.

(Continued)

Official Licensed Product Ford Motor Company®

DIAGNOSIS AND TESTING (Continued)

DTC B1249: BLEND DOOR FAILURE (Continued)

TEST CONDITIONS	TEST DETAILS/RESULTS/ACTIONS
B1249-7 CHECK THE ACTUATOR OPERATION (Continued)	
3 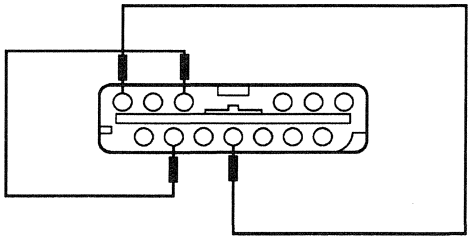 AL0175-B	3 With the actuator drive shaft disengaged from the temperature blend door, drive the electronic blend door actuator full clockwise; refer to Step B1249-1.
4 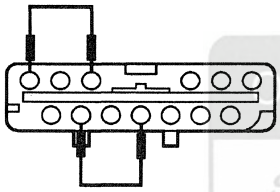 AL0040-B	4 With the actuator drive shaft disengaged from the temperature blend door, drive the electronic blend door actuator full counterclockwise; refer to Step B1249-2. • Does the blend door actuator drive both clockwise and counterclockwise? → **Yes** REPAIR the temperature blend door for a blocked or binding condition. TEST the system for normal operation. → **No** REPLACE the A/C electronic blend door actuator. TEST the system for normal operation.

Official Licensed Product
Ford Motor Company

(Continued)

DIAGNOSIS AND TESTING (Continued)

DTC B1249: BLEND DOOR FAILURE (Continued)

TEST CONDITIONS	TEST DETAILS/RESULTS/ACTIONS
B1249-8 CHECK THE FEEDBACK POTENTIOMETER TOTAL RESISTANCE	
1 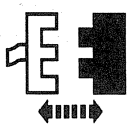 EATC Module C273	
2 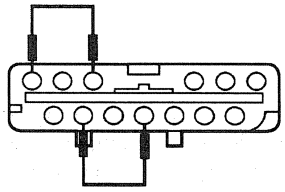 AL0040-B	2 Drive the electric blend door actuator full counterclockwise; refer to Step B1249-2.
3 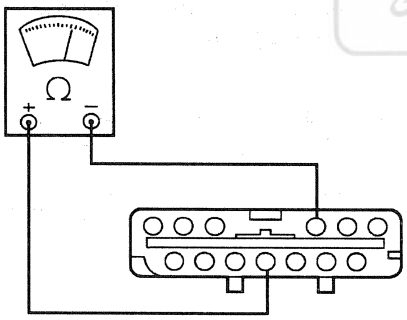 AL0045-B	3 Measure the resistance between the EATC module connector Pins C273-17, Circuit 436 (R/LG) and C273-4, Circuit 438 (R/W). • Is the resistance between 5000 and 7000 ohms? → **Yes** GO to **B1249-13**. → **No** GO to **B1249-9**.

Official Licensed Product
Ford Motor Co.

(Continued)

DIAGNOSIS AND TESTING (Continued)

DTC B1249: BLEND DOOR FAILURE (Continued)

TEST CONDITIONS	TEST DETAILS/RESULTS/ACTIONS
B1249-9 CHECK CIRCUIT 436 (R/LG) FOR AN OPEN	
1 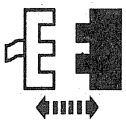 Electric Blend Door Actuator C224 2 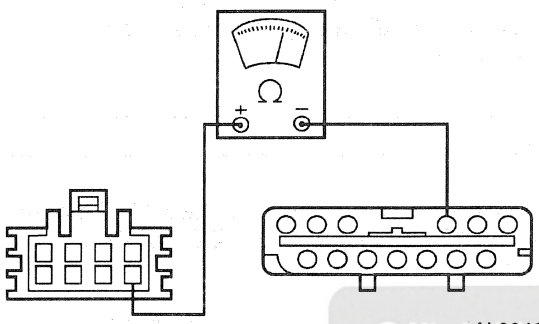 AL0046-B	2 Measure the resistance between the EATC module connector Pin C273-17, Circuit 436 (R/LG) and the electric blend door actuator connector Pin C224-5. • Is the resistance less than 5 ohms? → **Yes** GO to **B1249-10**. → **No** REPAIR Circuit 436 (R/LG) for an open. TEST the system for normal operation.
B1249-10 CHECK CIRCUIT 438 (R/W) FOR AN OPEN	
1 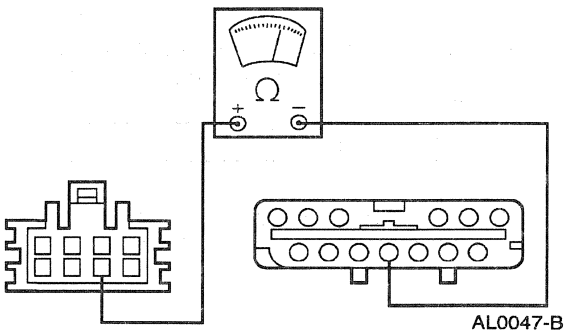 AL0047-B	1 Measure the resistance between the EATC connector Pin C273-4, Circuit 438 (R/W) and the electric blend door actuator connector Pin C224-6. • Is the resistance less than 5 ohms? → **Yes** GO to **B1249-11**. → **No** REPAIR Circuit 438 (R/W) for an open. TEST the system for normal operation.

Official Licensed Product
Ford Motor Company

(Continued)

DIAGNOSIS AND TESTING (Continued)

DTC B1249: BLEND DOOR FAILURE (Continued)

TEST CONDITIONS	TEST DETAILS/RESULTS/ACTIONS
B1249-11 CHECK CIRCUIT 436 (R/LG) FOR A SHORT TO GROUND	
1 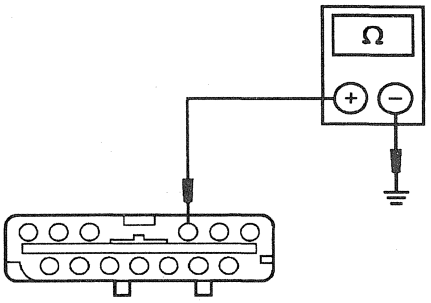 AM0746-A	1 Measure the resistance between the EATC module connector Pin C273-17, Circuit 436 (R/LG) and ground. • Is the resistance greater than 10,000 ohms? → **Yes** GO to **B1249-12**. → **No** REPAIR Circuit 436 (R/LG) for a short to ground. TEST the system for normal operation.
B1249-12 CHECK CIRCUIT 438 (R/W) FOR A SHORT TO GROUND	
1 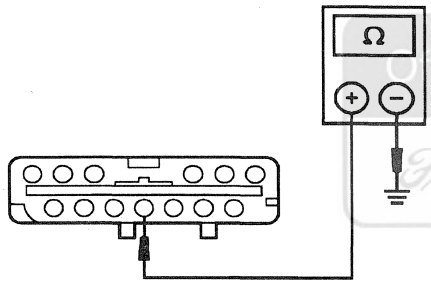 AM0747-A	1 Measure the resistance between the EATC module connector Pin C273-4, Circuit 438 (R/W) and ground. • Is the resistance greater than 10,000 ohms? → **Yes** REPLACE the A/C electronic blend door actuator. TEST the system for normal operation. → **No** REPAIR Circuit 438 (R/W) for a short to ground. TEST the system for normal operation.
B1249-13 CHECK THE FEEDBACK POTENTIOMETER LOW SIDE RESISTANCE	
1 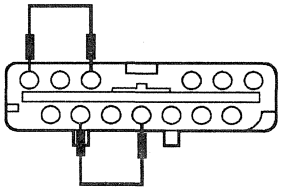 AL0040-B	1 Drive the electric blend door actuator full counterclockwise; refer to Step B1249-2.

(Continued)

Official Licensed Product Ford Motor Company

DIAGNOSIS AND TESTING (Continued)

DTC B1249: BLEND DOOR FAILURE (Continued)

TEST CONDITIONS	TEST DETAILS/RESULTS/ACTIONS
B1249-13 CHECK THE FEEDBACK POTENTIOMETER LOW SIDE RESISTANCE (Continued)	
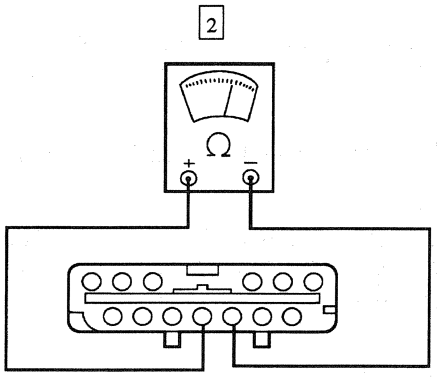 AL0048-B	2 Measure the resistance between the EATC module connector Pins C273-3, Circuit 437 (Y/LG) and C273-4, Circuit 438 (R/W). • Is the resistance between 250 and 1,500 ohms? → **Yes** GO to **B1249-16**. → **No** GO to **B1249-14**.
B1249-14 CHECK CIRCUIT 437 (Y/LG) FOR AN OPEN	
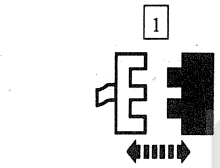 Electric Blend Door Actuator C224 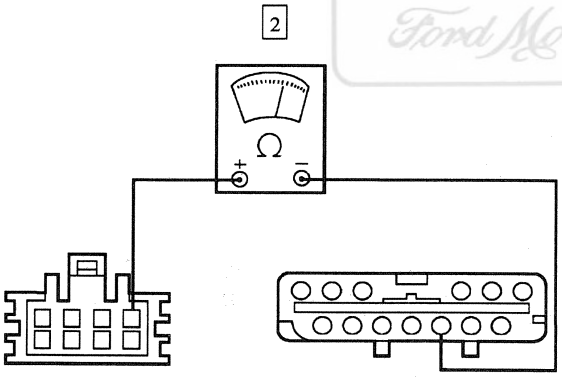 AL0049-B	2 Measure the resistance between the EATC module connector Pin C273-3, Circuit 437 (Y/LG) and the electric blend door actuator connector Pin C224-1. • Is the resistance less than 5 ohms? → **Yes** GO to **B1249-15**. → **No** REPAIR Circuit 437 (Y/LG) for an open. TEST the system for normal operation.

Official Licensed Product
Ford Motor Co.

(Continued)

DIAGNOSIS AND TESTING (Continued)

DTC B1249: BLEND DOOR FAILURE (Continued)

TEST CONDITIONS	TEST DETAILS/RESULTS/ACTIONS
B1249-15 CHECK CIRCUIT 437 (Y/LG) FOR A SHORT TO GROUND	
1 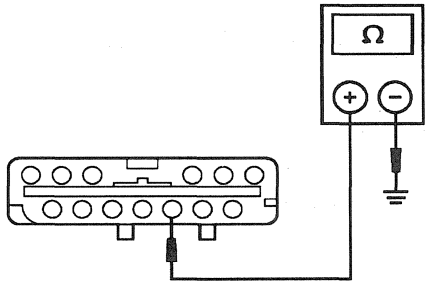 AM0748-A	1 Measure the resistance between the EATC module connector Pin C273-3, Circuit 437 (Y/LG) and ground. • Is the resistance greater than 10,000 ohms? → **Yes** REPLACE the A/C electronic blend door actuator. TEST the system for normal operation. → **No** REPAIR Circuit 437 (Y/LG) for a short to ground. TEST the system for normal operation.
B1249-16 CHECK THE FEEDBACK POTENTIOMETER HIGH SIDE RESISTANCE	
1 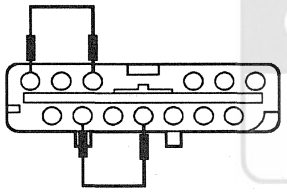 AL0040-B	1 Drive the electric blend door actuator full counterclockwise; refer to Step B1249-2.
2 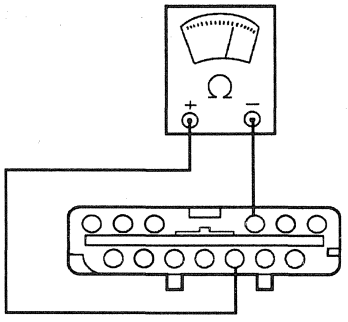 AL0050-B	2 Measure the resistance between the EATC module connector Pins C273-17, Circuit 436 (R/LG) and C273-3, Circuit 437 (Y/LG). • Is the resistance between 3,500 and 6,000 ohms? → **Yes** GO to **B1249-17**. → **No** REPLACE the A/C electric blend door actuator. TEST the system for normal operation.

(Continued)

Official Licensed Product Ford Motor Company

DIAGNOSIS AND TESTING (Continued)

DTC B1249: BLEND DOOR FAILURE (Continued)

TEST CONDITIONS	TEST DETAILS/RESULTS/ACTIONS
B1249-17 CHECK CIRCUIT 436 (R/LG) FOR A SHORT	
1 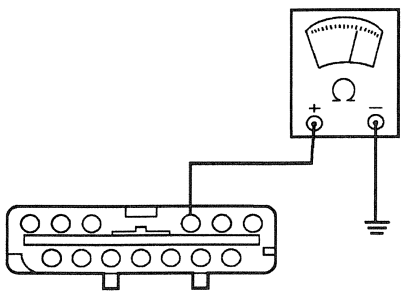 AL0051-B	1 Measure the resistance between the EATC module connector Pin C273-17, Circuit 436 (R/LG) and ground. • Is the resistance greater than 10,000 ohms? → **Yes** GO to **B1249-18**. → **No** REPAIR Circuit 436 (R/LG) for a short to ground. TEST the system for normal operation.
B1249-18 CHECK CIRCUIT 438 (R/W) FOR A SHORT	
1 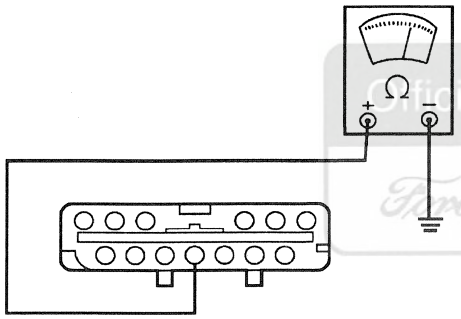 AL0052-B	1 Measure the resistance between the EATC module connector Pin C273-4, Circuit 438 (R/W) and ground. • Is the resistance greater than 10,000 ohms? → **Yes** GO to **B1249-19**. → **No** REPAIR Circuit 438 (R/W) for a short to ground. TEST the system for normal operation.
B1249-19 CHECK CIRCUIT 437 (Y/LG) FOR A SHORT	
1 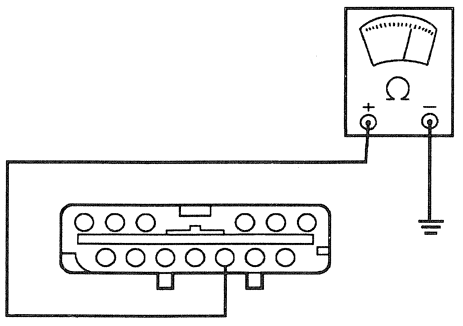 AL0053-B	1 Measure the resistance between the EATC module connector Pin C273-3, Circuit 437 (Y/LG) and ground. • Is the resistance greater than 10,000 ohms? → **Yes** REPLACE the EATC module. TEST the system for normal operation. → **No** REPAIR Circuit 437 (Y/LG) for a short to ground. TEST the system for normal operation.

Official Licensed Product Ford Motor Company

DIAGNOSIS AND TESTING (Continued)

DTC B1251: A/C IN-CAR TEMPERATURE SENSOR OPEN CIRCUIT

TEST CONDITIONS	TEST DETAILS/RESULTS/ACTIONS
B1251-1 CHECK THE SENSOR RESISTANCE	
1 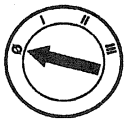 2 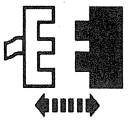 In-Car Temperature Sensor C250 3 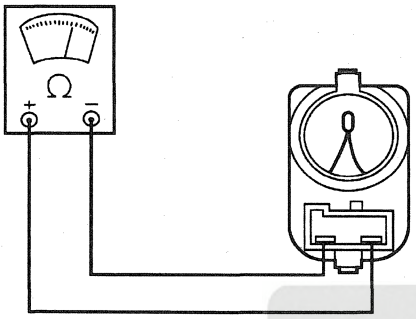 AL0054-A	3 Measure the resistance between the in-car temperature sensor terminals. • Is the resistance within the specified values for these temperature ranges: 10-20°C (50-68°F) 37.000-58,000 ohms, 20-30°C (68-86°F) 24,000-37,000 ohms, 30-40°C (86-104°F) 16,000-24,000 ohms? → **Yes** GO to **B1251-2**. → **No** REPLACE the in-car temperature sensor. TEST the system for normal operation.
B1251-2 CHECK THE EATC SENSOR OUTPUT VOLTAGE	
1 2 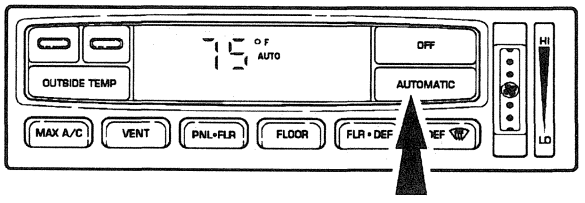 AL0055-A	2 Press the AUTOMATIC button.

(Continued)

Official Licensed Publication
Ford Motor Company

DIAGNOSIS AND TESTING (Continued)

DTC B1251: A/C IN-CAR TEMPERATURE SENSOR OPEN CIRCUIT (Continued)

TEST CONDITIONS	TEST DETAILS/RESULTS/ACTIONS
B1251-2 CHECK THE EATC SENSOR OUTPUT VOLTAGE (Continued)	
3 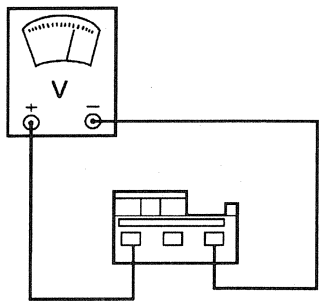 AL0056-A	3 Measure the voltage between the in-car temperature sensor connector C250, Circuits 790 (W/O) and 470 (PK/BK). • Is the voltage between 4.7 and 5.1 volts? → **Yes** GO to **B1251-5**. → **No** GO to **B1251-3**.
B1251-3 CHECK CIRCUIT 790 (W/O) FOR AN OPEN	
1 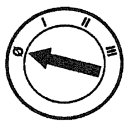 2 EATC Module C273 3 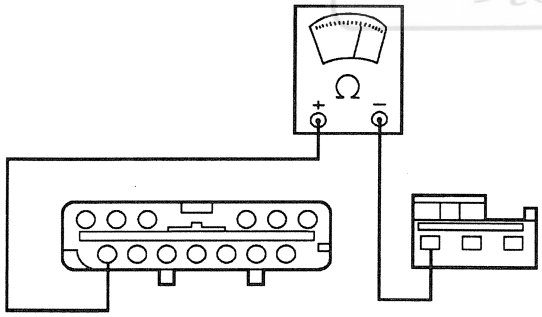 AL0057-B	3 Measure the resistance between the EATC module connector Pin C273-7, Circuit 790 (W/O) and the in-car temperature sensor connector C250. • Is the resistance less than 5 ohms? → **Yes** GO to **B1251-4**. → **No** REPAIR Circuit 790 (W/O) for an open. TEST the system for normal operation.

Official Licensed Product
Ford Motor Company

(Continued)

DIAGNOSIS AND TESTING (Continued)

DTC B1251: A/C IN-CAR TEMPERATURE SENSOR OPEN CIRCUIT (Continued)

TEST CONDITIONS	TEST DETAILS/RESULTS/ACTIONS
B1251-4 CHECK CIRCUIT 470 (PK/BK) FOR AN OPEN	
1 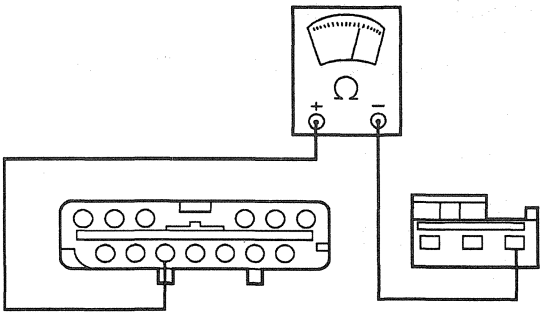 AL0058-B	1 Measure the resistance between the EATC connector Pin C273-5, Circuit 470 (PK/BK) and the in-car temperature sensor connector C250. • Is the resistance less than 5 ohms? → **Yes** REPLACE the EATC module. TEST the system for normal operation. → **No** REPAIR Circuit 470 (PK/BK) for an open. TEST the system for normal operation.
B1251-5 INSPECT THE CONNECTIONS	
1 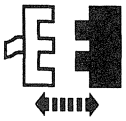 EATC Module C273	2 Inspect the in-car temperature sensor connector C250 pins and the EATC connector Pins C273-5, Circuit 470 (PK/BK) and C273-7, Circuit 790 (W/O) for signs of damage, loose fits, or improper installation. • Are the connector pins undamaged and installed properly? → **Yes** REPLACE the EATC module. TEST the system for normal operation. → **No** REPAIR damaged or loose connector pins. TEST the system for normal operation.

Official Licensed Product
Ford Motor Company

DIAGNOSIS AND TESTING (Continued)

DTC B1253: A/C IN-CAR TEMPERATURE SENSOR SHORT TO GROUND

TEST CONDITIONS	TEST DETAILS/RESULTS/ACTIONS
B1253-1 CHECK THE IN-CAR TEMPERATURE SENSOR RESISTANCE	
1 2 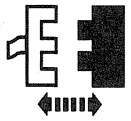 In-Car Temperature Sensor C250 3 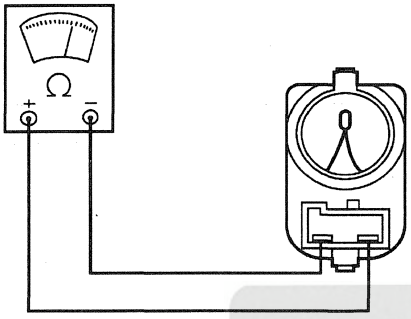 AL0054-A	3 Measure the resistance between the in-car temperature sensor terminals. • Is the resistance within the specified values for these temperature ranges: 10-20°C (50-68°F) 37,000-58,000 ohms, 20-30°C (68-86°F) 24,000-37,000 ohms, 30-40°C (86-104°F) 16,000-24,000 ohms? → **Yes** GO to **B1253-2**. → **No** REPLACE the in-car temperature sensor. TEST the system for normal operation.
B1253-2 CHECK THE IN-CAR TEMPERATURE SENSOR OUTPUT VOLTAGE	
1 2 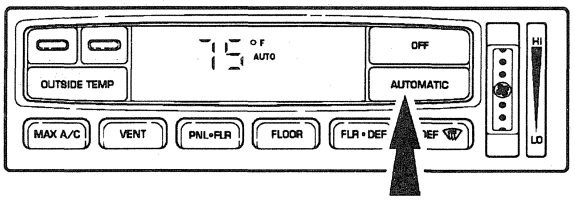 AL0055-A	2 Press the AUTOMATIC button.

Official Licensed Product
Ford Motor Company

(Continued)

DIAGNOSIS AND TESTING (Continued)

DTC B1253: A/C IN-CAR TEMPERATURE SENSOR SHORT TO GROUND (Continued)

TEST CONDITIONS	TEST DETAILS/RESULTS/ACTIONS
B1253-2 CHECK THE IN-CAR TEMPERATURE SENSOR OUTPUT VOLTAGE (Continued)	
3 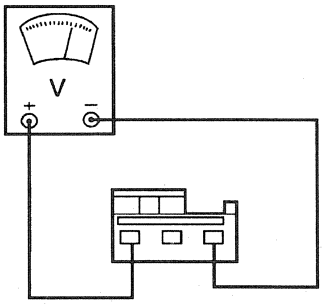 AL0056-A	3 Measure the voltage between the in-car temperature sensor connector C250 Pins at Circuits 790 (W/O) and 470 (PK/BK). • Is the voltage between 4.7 and 5.1 volts? → **Yes** GO to **B1253-4**. → **No** GO to **B1253-3**.
B1253-3 CHECK CIRCUIT 790 (W/O) FOR A SHORT	
1 2 EATC Module C273 3 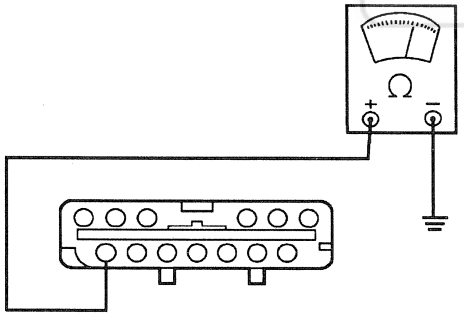 AL0059-B	3 Measure the resistance between the EATC module connector Pin C273-7, Circuit 790 (W/O) and ground. • Is the resistance greater than 10,000 ohms? → **Yes** REPLACE the EATC module. TEST the system for normal operation. → **No** REPAIR Circuit 790 (W/O) for a short to ground. TEST the system for normal operation.

Official Licensed Product
Ford Motor Co.

(Continued)

DIAGNOSIS AND TESTING (Continued)

DTC B1253: A/C IN-CAR TEMPERATURE SENSOR SHORT TO GROUND (Continued)

TEST CONDITIONS	TEST DETAILS/RESULTS/ACTIONS
B1253-4 INSPECT THE CONNECTIONS	
1 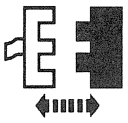 EATC Module C273	2 Inspect the in-car temperature sensor connector C250 pins and the EATC connector Pins C273-5, Circuit 470 (PK/BK) and C273-7, Circuit 790 (W/O) for signs of damage, loose fits or improper installation. • Are the connector pins undamaged and installed properly? → **Yes** REPLACE the EATC module. TEST the system for normal operation. → **No** REPAIR damaged or loose connector pins. TEST the system for normal operation.

Official Licensed Product
Ford Motor Company

DIAGNOSIS AND TESTING (Continued)

DTC B1255: A/C AMBIENT TEMPERATURE SENSOR OPEN CIRCUIT

TEST CONDITIONS	TEST DETAILS/RESULTS/ACTIONS
B1255-1 CHECK THE AMBIENT TEMPERATURE SENSOR RESISTANCE	
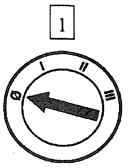 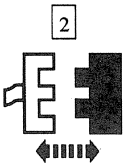 Ambient Temperature Sensor C191 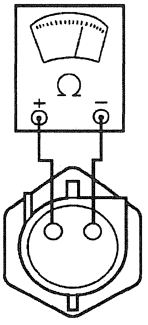 AL0061-A	3 Measure the resistance between the ambient temperature sensor terminals. • Is the resistance within the specified values for these temperature ranges: 10-20°C (50-68°F) 37,000-58,000 ohms, 20-30°C (68-86°F) 24,000-37,000 ohms, 30-40°C (86-104°F) 16,000-24,000 ohms? → **Yes** GO to **B1255-2.** → **No** REPLACE the A/C ambient air temperature sensor and bracket. TEST the system for normal operation.
B1255-2 CHECK THE EATC SENSOR OUTPUT VOLTAGE	
  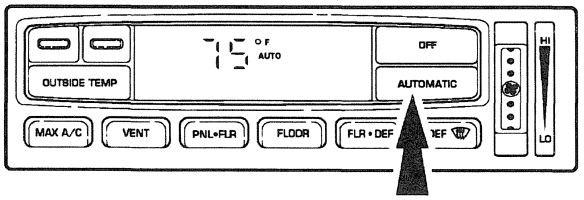 AL0055-A	2 Press the AUTOMATIC button.

(Continued)

DIAGNOSIS AND TESTING (Continued)

DTC B1255: A/C AMBIENT TEMPERATURE SENSOR OPEN CIRCUIT (Continued)

TEST CONDITIONS	TEST DETAILS/RESULTS/ACTIONS
B1255-2 CHECK THE EATC SENSOR OUTPUT VOLTAGE (Continued)	
3 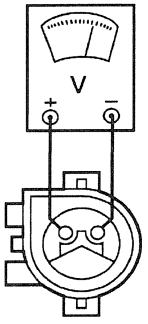 AL0062-A	3 Measure the voltage between the ambient temperature sensor connector C191 Pins at Circuits 788 (R/O) and 470 (PK/BK). • Is the voltage between 4.7 and 5.1 volts? → **Yes** GO to **B1255-5**. → **No** GO to **B1255-3**.
B1255-3 CHECK CIRCUIT 788 (R/O) FOR AN OPEN	
1 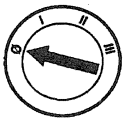 2 EATC Module C273 3 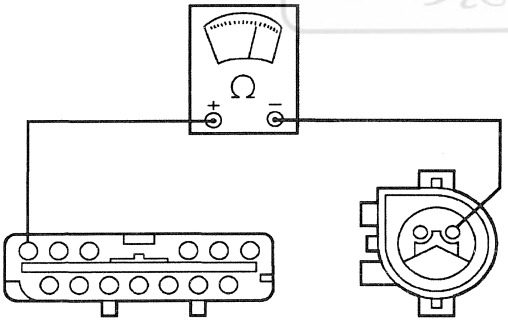 AL0063-B	3 Measure the resistance between the EATC module connector Pin C273-20, Circuit 788 (R/O) and the ambient temperature sensor connector C191. • Is the resistance less than 5 ohms? → **Yes** GO to **B1255-4**. → **No** REPAIR Circuit 788 (R/O) for an open. TEST the system for normal operation.

Official Licensed Product
Ford Motor Company

(Continued)

DIAGNOSIS AND TESTING (Continued)

DTC B1255: A/C AMBIENT TEMPERATURE SENSOR OPEN CIRCUIT (Continued)

TEST CONDITIONS	TEST DETAILS/RESULTS/ACTIONS
B1255-4 CHECK CIRCUIT 470 (PK/BK) FOR AN OPEN	
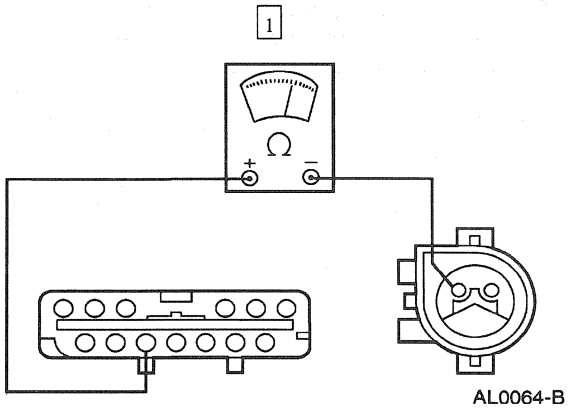	1 Measure the resistance between the EATC module connector Pin C273-5, Circuit 470 (PK/BK) and the ambient temperature sensor connector C191. • Is the resistance less than 5 ohms? → **Yes** REPLACE the EATC module. TEST the system for normal operation. → **No** REPAIR Circuit 470 (PK/BK) for an open. TEST the system for normal operation.
B1255-5 INSPECT THE CONNECTIONS	
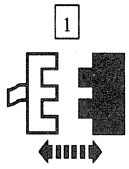 EATC Module C273	2 Inspect the ambient temperature sensor connector C191 pins and the EATC connector Pins C273-5, Circuit 470 (PK/BK) and C273-20, Circuit 788 (R/O) for signs of damage, loose fits or improper installation. • Are the connector pins undamaged and installed properly? → **Yes** REPLACE the EATC module. TEST the system for normal operation. → **No** REPAIR damaged or loose connector pins. TEST the system for normal operation.

Official Licensed Product
Ford Motor Company

DIAGNOSIS AND TESTING (Continued)

DTC B1257: A/C AMBIENT TEMPERATURE SENSOR SHORT TO GROUND

TEST CONDITIONS	TEST DETAILS/RESULTS/ACTIONS
B1257-1 CHECK THE AMBIENT TEMPERATURE SENSOR RESISTANCE	
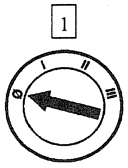 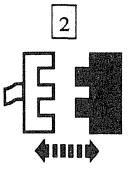 Ambient Temperature Sensor C191 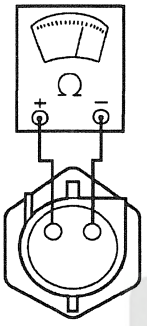 AL0061-A	3 Measure the resistance between the ambient temperature sensor terminals. • Is the resistance within the specified values for these temperature ranges: 10-20°C (50-68°F) 27,000-58,000 ohms, 20-30°C (68-86°F) 24,000-37,000 ohms, 30-40°C (86-104°F) 16,000-24,000 ohms? → **Yes** GO to **B1257-2.** → **No** REPLACE the A/C ambient air temperature sensor and bracket. TEST the system for normal operation.
B1257-2 CHECK THE AMBIENT TEMPERATURE SENSOR OUTPUT VOLTAGE	
  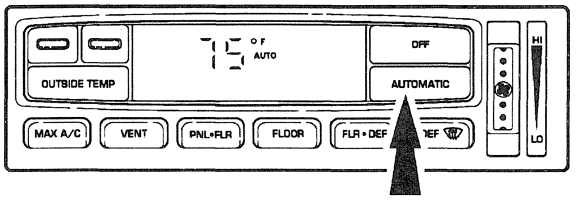 AL0055-A	2 Press the AUTOMATIC button.

(Continued)

DIAGNOSIS AND TESTING (Continued)

DTC B1257: A/C AMBIENT TEMPERATURE SENSOR SHORT TO GROUND (Continued)

TEST CONDITIONS	TEST DETAILS/RESULTS/ACTIONS
B1257-2 CHECK THE AMBIENT TEMPERATURE SENSOR OUTPUT VOLTAGE (Continued)	
3 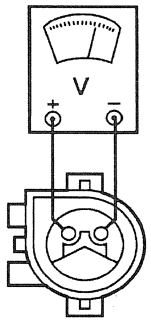 AL0062-A	3 Measure the voltage between the ambient temperature sensor connector C191 Pins at Circuits 788 (R/O) and 470 (PK/BK). • Is the voltage between 4.7 and 5.1 volts? → **Yes** GO to **B1257-4**. → **No** GO to **B1257-3**.
B1257-3 CHECK CIRCUIT 788 (R/O) FOR A SHORT	
1 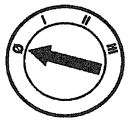 2 EATC Module C273 3 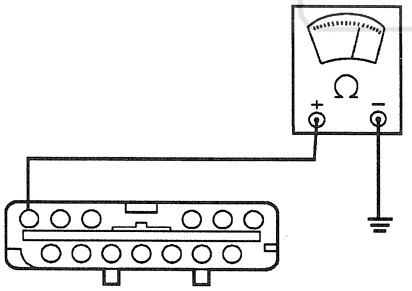 AL0065-B	3 Measure the resistance between the EATC connector Pin C273-20, Circuit 788 (R/O) and ground. • Is the resistance greater than 10,000 ohms? → **Yes** REPLACE the EATC module. TEST the system for normal operation. → **No** REPAIR Circuit 788 (R/O) for a short to ground. TEST the system for normal operation.

Official Licensed Product
Ford Motor Company

(Continued)

DIAGNOSIS AND TESTING (Continued)

DTC B1257: A/C AMBIENT TEMPERATURE SENSOR SHORT TO GROUND (Continued)

TEST CONDITIONS	TEST DETAILS/RESULTS/ACTIONS
B1257-4 INSPECT THE CONNECTIONS	
1 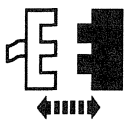 EATC Module C273	2 Inspect the A/C ambient temperature sensor connector C191 pins and the EATC connector Pins C273-5, Circuit 470 (PK/BK) and C273-20, Circuit 788 (R/O) for signs of damage, loose fits or improper installation. • Are the connector pins undamaged and installed properly? → **Yes** REPLACE the EATC module. TEST the system for normal operation. → **No** REPAIR damaged or loose connector pins. TEST the system for normal operation.

Official Licensed Product

DTC B1261: A/C SOLAR RADIATION SENSOR CIRCUIT SHORT TO GROUND

TEST CONDITIONS	TEST DETAILS/RESULTS/ACTIONS
B1261-1 CHECK THE SUNLOAD SENSOR RESISTANCE	
1 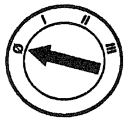 2 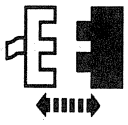 Sunload Sensor C251 3 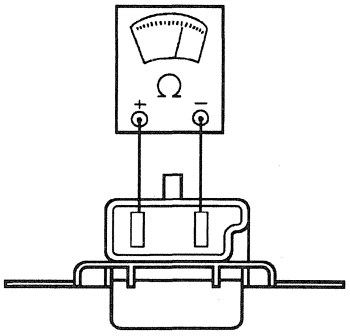 AL0067-A	3 **NOTE:** Connect the ground lead of the multimeter to ground on the sensor, Circuit 470 (PK/BK). Measure the resistance between the sunload sensor terminals. • Is the resistance greater than 0 ohms? → **Yes** GO to **B1261-2.** → **No** REPLACE the A/C sunload sensor. TEST the system for normal operation.

(Continued)

DIAGNOSIS AND TESTING (Continued)

DTC B1261: A/C SOLAR RADIATION SENSOR CIRCUIT SHORT TO GROUND (Continued)

TEST CONDITIONS	TEST DETAILS/RESULTS/ACTIONS
B1261-2 CHECK THE SUNLOAD SENSOR OUTPUT VOLTAGE	
1 2 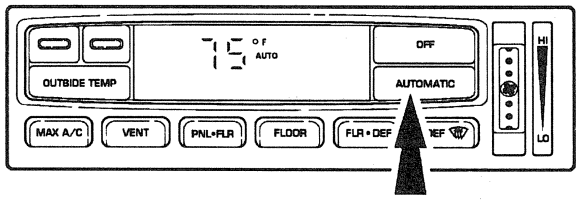 AL0055-A 3 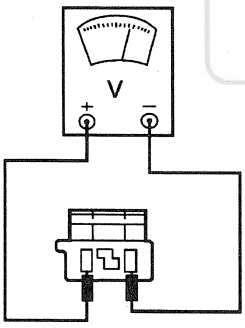 AL0068-A	2 Press the AUTOMATIC button. 3 Measure the voltage between the sunload sensor connector C251 Pins at Circuits 468 (BR) and 470 (PK/BK). • Is the voltage between 4.7 and 5.1 volts? → **Yes** GO to **B1261-6.** → **No** GO to **B1261-3.**

Official Licensed Product
Ford Motor Company

(Continued)

DIAGNOSIS AND TESTING (Continued)

DTC B1261: A/C SOLAR RADIATION SENSOR CIRCUIT SHORT TO GROUND (Continued)

TEST CONDITIONS	TEST DETAILS/RESULTS/ACTIONS
B1261-3 CHECK CIRCUIT 468 (BR) FOR A SHORT	
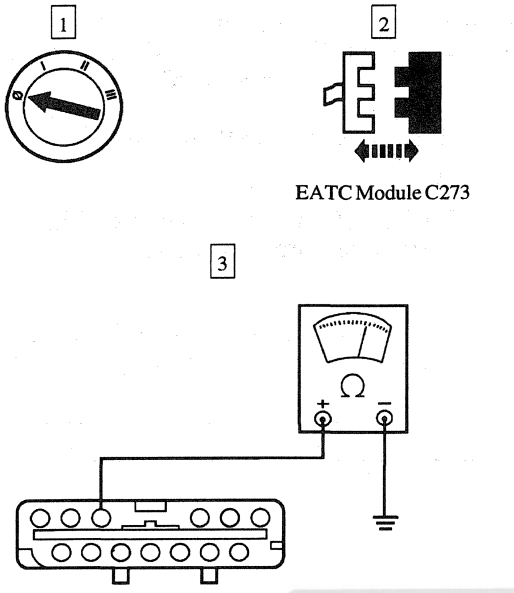	3 Measure the resistance between the EATC module connector Pin C273-18, Circuit 468 (BR) and ground. • Is the resistance greater than 10,000 ohms? → **Yes** GO to **B1261-4**. → **No** REPAIR Circuit 468 (BR) for a short to ground. TEST the system for normal operation.
B1261-4 CHECK CIRCUIT 468 (BR) FOR AN OPEN	
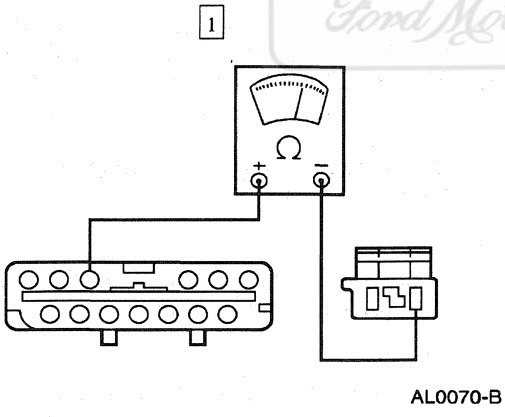	1 Measure the resistance between the EATC module connector Pin C273-18, Circuit 468 (BR) and the sunload sensor connector C251. • Is the resistance less than 5 ohms? → **Yes** GO to **B1261-5**. → **No** REPAIR Circuit 468 (BR) for an open. TEST the system for normal operation.

Official Licensed Product
Ford Motor Company

(Continued)

DIAGNOSIS AND TESTING (Continued)

DTC B1261: A/C SOLAR RADIATION SENSOR CIRCUIT SHORT TO GROUND (Continued)

TEST CONDITIONS	TEST DETAILS/RESULTS/ACTIONS
B1261-5 CHECK CIRCUIT 470 (PK/BK) FOR AN OPEN	
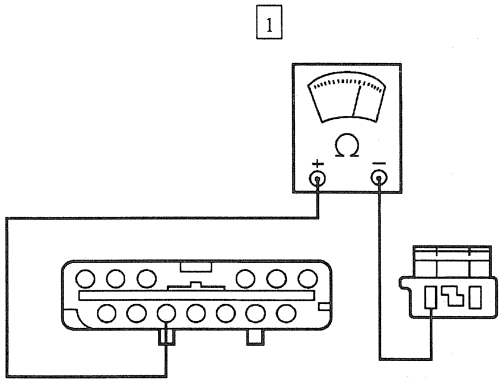 AL0072-B	1 Measure the resistance between the EATC module connector Pin C273-5, Circuit 470 (PK/BK) and the sunload sensor connector C251. • Is the resistance less than 5 ohms? → **Yes** REPLACE the EATC module. TEST the system for normal operation. → **No** REPAIR Circuit 470 (PK/BK) for an open. TEST the system for normal operation.
B1261-6 INSPECT THE CONNECTIONS	
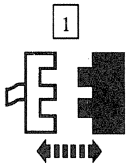 EATC Module C273	2 Inspect the sun load sensor connector C251 pins and the EATC connector Pins C273-5, Circuit 470 (PK/BK) and C273-18 Circuit 468 (BR) for signs of damage, loose fits or improper installation. • Are the connector pins undamaged and installed properly? → **Yes** REPLACE the EATC module. TEST the system for normal operation. → **No** REPAIR damaged or loose connector pins. TEST the system for normal operation.

Official Licensed Product
Ford Motor Company

DIAGNOSIS AND TESTING (Continued)

PINPOINT TEST A: NO COMMUNICATION WITH THE ELECTRONIC AUTOMATIC TEMPERATURE CONTROL MODULE

TEST CONDITIONS	TEST DETAILS/RESULTS/ACTIONS
A1 CHECK CIRCUIT 57 (BK) FOR AN OPEN	
1 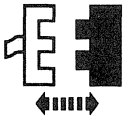 EATC Module C272 2 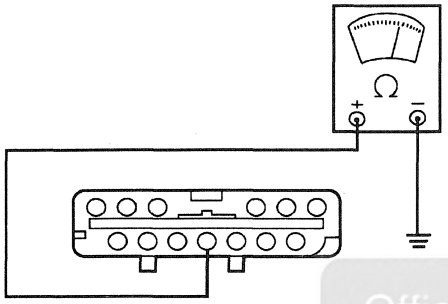 AL0073-B	2 Measure the resistance between the EATC module connector Pin C272-11, Circuit 57 (BK) and ground. • Is the resistance less than 5 ohms? → **Yes** GO to **A2.** → **No** REPAIR Circuit 57 (BK) for an open. TEST the system for normal operation.
A2 CHECK CIRCUIT 973 (R) FOR B+	
1 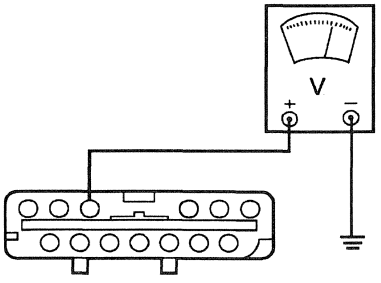 AL0074-B	1 Measure the voltage between the EATC module connector Pin C272-24, Circuit 973 (R) and ground. • Is the voltage B+? → **Yes** GO to **A3.** → **No** REPAIR Circuit 973 (R) for an open. TEST the system for normal operation.

(Continued)

Official Licensed Product
Ford Motor Company

DIAGNOSIS AND TESTING (Continued)

PINPOINT TEST A: NO COMMUNICATION WITH THE ELECTRONIC AUTOMATIC TEMPERATURE CONTROL MODULE (Continued)

TEST CONDITIONS	TEST DETAILS/RESULTS/ACTIONS
A3 CHECK CIRCUIT 364 (BK/LG) FOR B+	
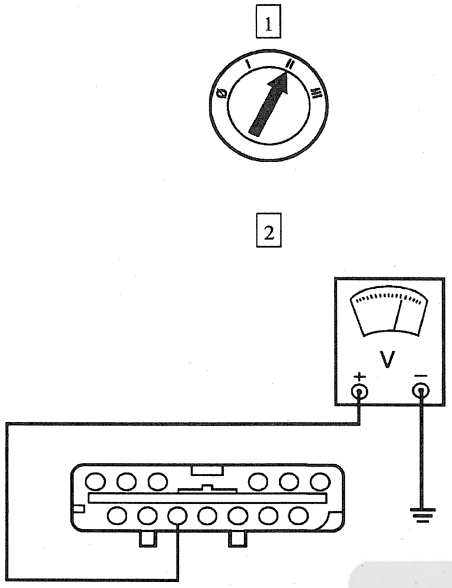 AL0075-B	2 Measure the voltage between the EATC module connector Pin C272-12, Circuit 364 (BK/LG) and ground. • Is the voltage B+? → **Yes** GO to Section 418-00 to diagnose a network concern. → **No** REPAIR Circuit 364 (BK/LG) for an open. TEST the system for normal operation.

Official Licensed Product
Ford Motor Company

DIAGNOSIS AND TESTING (Continued)

PINPOINT TEST B: THE EATC SYSTEM IS INOPERATIVE, INTERMITTENT OR IMPROPER OPERATION

TEST CONDITIONS	TEST DETAILS/RESULTS/ACTIONS
B1 PERFORM THE EATC MODULE SELF-TEST	
1 2 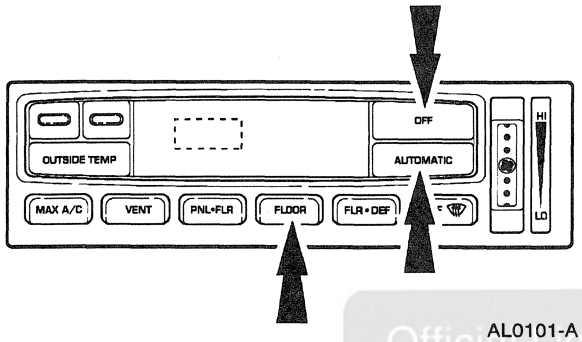 AL0101-A	2 Perform the EATC module self-test; refer to Electronic Automatic Temperature Control Module Self-Test in this section. Record the DTCs displayed, if any. • Were any DTCs displayed as a result of the EATC self-test? → **Yes** REFER to the Electronic Automatic Temperature Control (EATC) Module Diagnostic Trouble Code (DTC) Index. PERFORM the necessary diagnosis and REPAIR as required. → **No** GO to **B2**.
B2 CHECK THE VACUUM FLUORESCENT DISPLAY	
1 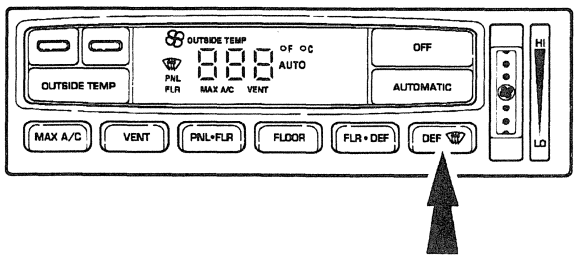 AL0102-A	1 Exit self-test by pressing the DEFROST button. Observe the function symbols displayed on the vacuum fluorescent display. • Is the display correct and complete without any missing elements? → **Yes** GO to **B3**. → **No** REPLACE the EATC module. TEST the system for normal operation.

Official Licensed Product

(Continued)

DIAGNOSIS AND TESTING (Continued)

PINPOINT TEST B: THE EATC SYSTEM IS INOPERATIVE, INTERMITTENT OR IMPROPER OPERATION (Continued)

TEST CONDITIONS	TEST DETAILS/RESULTS/ACTIONS
B3 VERIFY AUTOMATIC OPERATION	
1 2 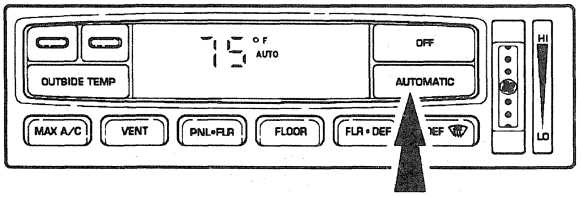 AL0055-A	2 Press the AUTOMATIC button. • Does AUTO and the selected temperature appear in the display window? → **Yes** GO to **B4**. → **No** GO to Pinpoint Test K.
B4 CHECK THE BLOWER MANUAL OVERRIDE HIGH SPEED OPERATION	
1 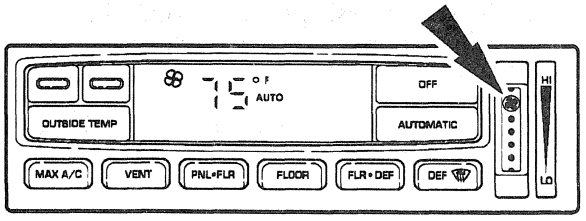 AL0104-A	1 Slowly rotate the blower motor speed override control fully up. • Does the blower motor speed increase smoothly and go to high speed? → **Yes** GO to **B5**. → **No** GO to Pinpoint Test J.

Official Licensed Product
Ford Motor Company

(Continued)

DIAGNOSIS AND TESTING (Continued)

PINPOINT TEST B: THE EATC SYSTEM IS INOPERATIVE, INTERMITTENT OR IMPROPER OPERATION (Continued)

TEST CONDITIONS	TEST DETAILS/RESULTS/ACTIONS
B5 CHECK THE BLOWER MANUAL OVERRIDE LOW SPEED OPERATION	
1 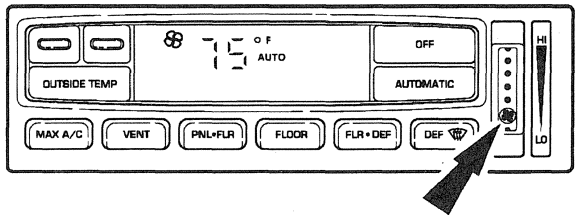 AL0103-A	1 Rotate the blower motor speed override control fully down. • Does the blower motor remain in high speed? → **Yes** GO to Pinpoint Test H. → **No** GO to **B6**.
B6 VERIFY THE DEFROST OVERRIDE OPERATION	
1 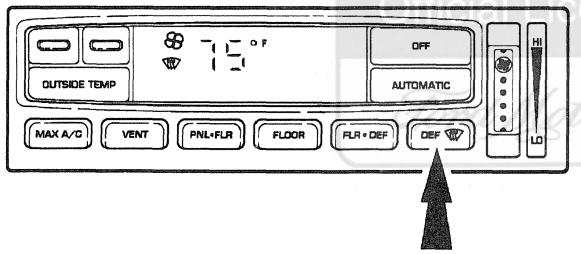 AL0105-A	1 Press the override button for DEFROST operation. • Is outside air being discharged from the windshield defroster nozzle and the side window demisters? → **Yes** GO to **B7**. → **No** GO to Pinpoint Test C.
B7 VERIFY THE FLOOR OVERRIDE OPERATION	
1 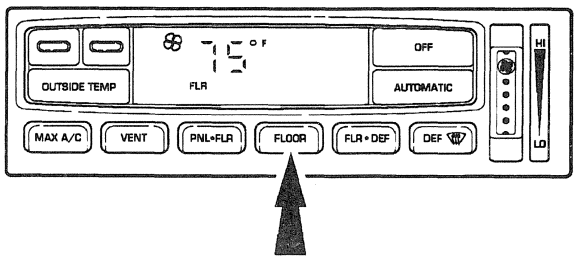 AL0106-A	1 Press the override button for FLOOR operation. • Is outside air being discharged from the floor duct? → **Yes** GO to **B8**. → **No** GO to Pinpoint Test C.

(Continued)

DIAGNOSIS AND TESTING (Continued)

PINPOINT TEST B: THE EATC SYSTEM IS INOPERATIVE, INTERMITTENT OR IMPROPER OPERATION (Continued)

TEST CONDITIONS	TEST DETAILS/RESULTS/ACTIONS
B8 VERIFY THE VENT OVERRIDE OPERATION	
1 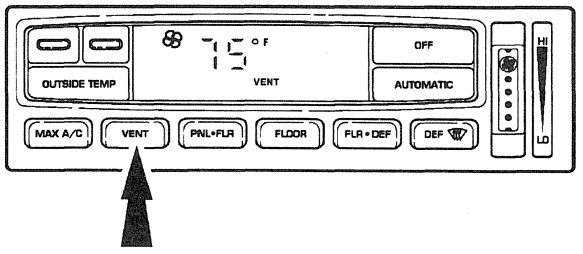 AL0107-A	1 Press the override button for VENT operation. • Is outside air being discharged from the instrument panel registers? → **Yes** GO to **B9**. → **No** GO to Pinpoint Test C.
B9 VERIFY THE A/C CLUTCH DOES NOT ENGAGE IN THE VENT MODE	
1 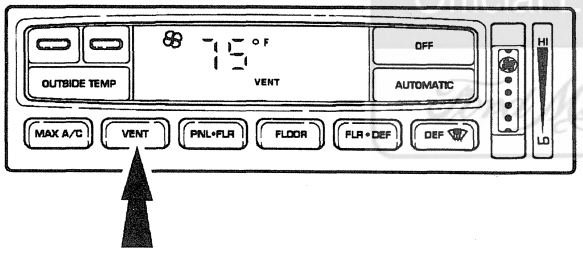 AL0107-A	1 Press the override button for VENT operation. • Does the A/C clutch engage when VENT override button is pressed? → **Yes** REFER to Powertrain Control/Emissions Diagnosis Manual [3]. → **No** GO to **B10**.
B10 VERIFY THE MAX A/C OVERRIDE OPERATION	
1 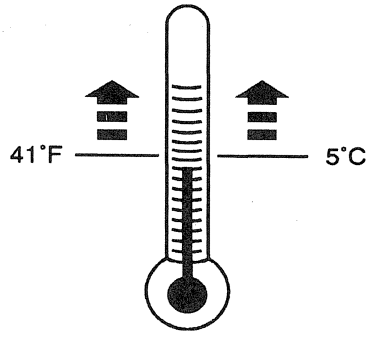 AL0108-B	1 Make sure the ambient air temperature is above 5°C (41°F).

(Continued)

3 Can be purchased as a separate item.

DIAGNOSIS AND TESTING (Continued)

PINPOINT TEST B: THE EATC SYSTEM IS INOPERATIVE, INTERMITTENT OR IMPROPER OPERATION (Continued)

TEST CONDITIONS	TEST DETAILS/RESULTS/ACTIONS
B10 VERIFY THE MAX A/C OVERRIDE OPERATION (Continued)	
2 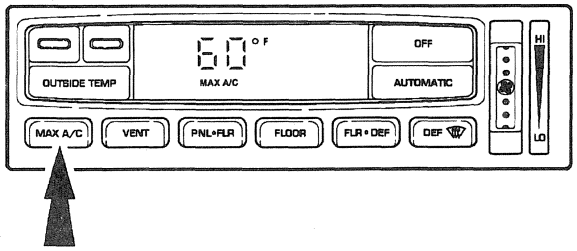 AL0109-A	2 Press the override button for MAX A/C operation. • Is recirculated air being discharged from the instrument panel registers? → **Yes** GO to **B11**. → **No** GO to Pinpoint Test C.
B11 VERIFY A/C CLUTCH ENGAGEMENT IN THE MAX A/C MODE	
1 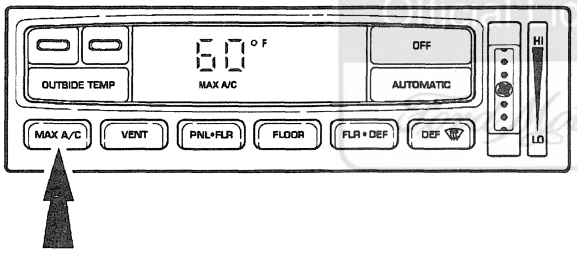 AL0109-A	1 Press the override button for MAX A/C operation. • Does the A/C clutch engage when the MAX A/C override button is pressed. → **Yes** The test is complete. The system is functioning normally. → **No** GO to Pinpoint Test E.

Official Licensed Product Motor Company

DIAGNOSIS AND TESTING (Continued)

PINPOINT TEST C: IMPROPER/ERRATIC DIRECTION OF AIR FLOW FROM OUTLET(S)

TEST CONDITIONS	TEST DETAILS/RESULTS/ACTIONS
C1 CHECK THE SYSTEM AIR FLOW	
1 Start Engine 2 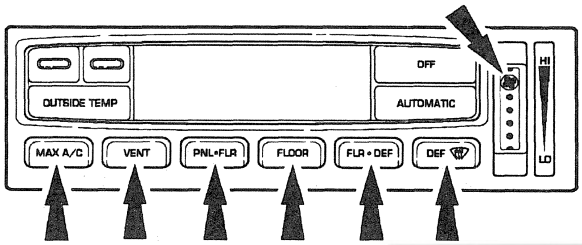 AL0110-A	2 Turn the blower motor speed override control to the HI position. Check for proper air flow in each manual override button at engine idle speed. • Is there air flow only from the defroster outlets under all conditions? → **Yes** GO to **C2**. → **No** GO to **C13**.
C2 CHECK THE VACUUM SUPPLY HOSE	
1 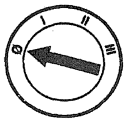 2 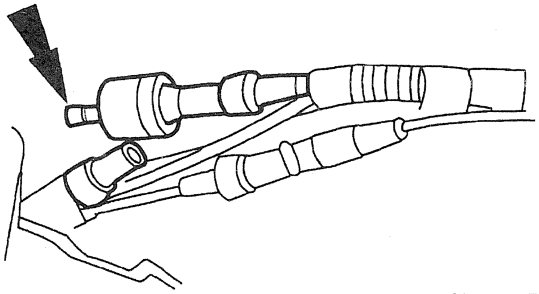 AL0111-B	2 Check for a disconnected vacuum supply hose between the engine intake manifold and the A/C vacuum check valve. • Is the hose disconnected? → **Yes** RECONNECT the hose. TEST the system for normal operation. → **No** GO to **C3**.

Official Licensed Product
Ford Motor Company

(Continued)

DIAGNOSIS AND TESTING (Continued)

PINPOINT TEST C: IMPROPER/ERRATIC DIRECTION OF AIR FLOW FROM OUTLET(S) (Continued)

TEST CONDITIONS	TEST DETAILS/RESULTS/ACTIONS
C3 LEAK CHECK THE VACUUM SUPPLY HOSE	
1 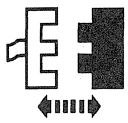 Vacuum Supply Hose	
2 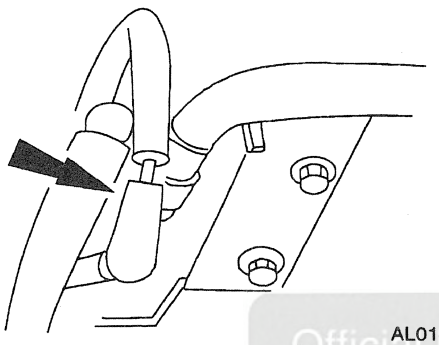 AL0146-A	2 Disconnect and plug the vacuum supply hose at the vacuum canister purge valve.
3 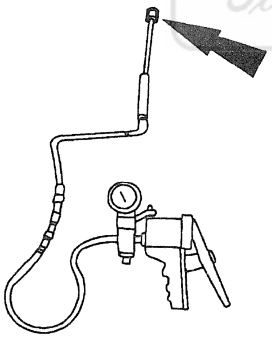 AL0147-B	3 Plug the intake manifold end of the supply hose and leak test with a vacuum pump at the check valve end. • Does the hose leak? → **Yes** REPAIR or REPLACE the vacuum hose. TEST the system for normal operation. → **No** RECONNECT the vacuum supply hose to the intake manifold. GO to **C4**.

(Continued)

Official Licensed Product
Ford Motor Company®

DIAGNOSIS AND TESTING (Continued)

PINPOINT TEST C: IMPROPER/ERRATIC DIRECTION OF AIR FLOW FROM OUTLET(S) (Continued)

TEST CONDITIONS	TEST DETAILS/RESULTS/ACTIONS
C4 CHECK THE SUPPLY HOSE FOR BLOCKAGE	
1 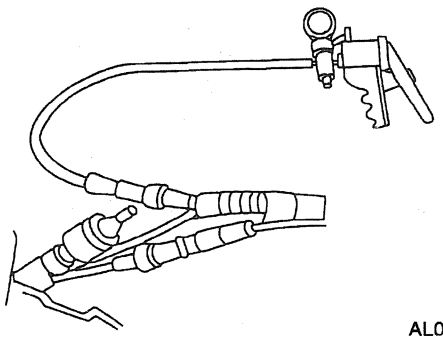 AL0403-A	1 Connect a vacuum tester to the supply hose and try to pull a vacuum. If the tester can pull a vacuum, the hose is plugged. If the tester pulls a partial vacuum, the hose is restricted. • Is the hose plugged or restricted? → **Yes** REPAIR or REPLACE the supply hose. TEST the system for normal operation. → **No** RECONNECT the vacuum canister purge valve and the vacuum check valve. GO to **C5**.
C5 CHECK THE VACUUM CHECK VALVE	
2 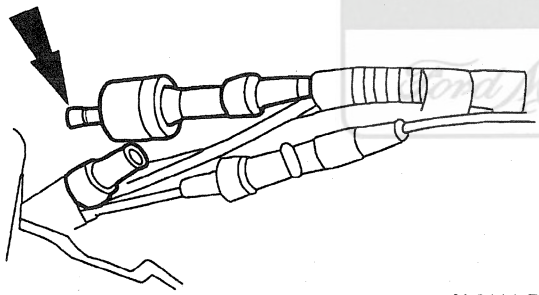 AL0111-B	1 Start the engine and run at idle. 2 Check the A/C vacuum check valve for blockage by removing the reservoir hose from the A/C vacuum check valve. Check for vacuum. • Is vacuum available at the check valve port? → **Yes** GO to **C6**. → **No** REPLACE the A/C vacuum check valve. TEST the system for normal operation.

Official License Ford Motor Company

(Continued)

DIAGNOSIS AND TESTING (Continued)

PINPOINT TEST C: IMPROPER/ERRATIC DIRECTION OF AIR FLOW FROM OUTLET(S) (Continued)

TEST CONDITIONS	TEST DETAILS/RESULTS/ACTIONS
C6 LEAK TEST THE VACUUM CHECK VALVE	
1 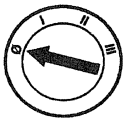 2 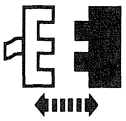 A/C Vacuum Check Valve	
3 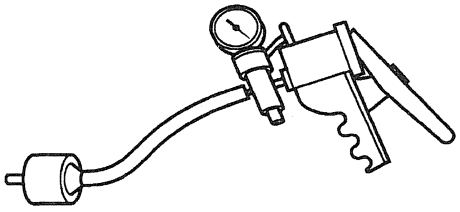 AL0149-A	3 Connect the A/C vacuum check valve to a vacuum pump.
	4 Pump 51 kPa (15 inches-Hg) vacuum on the A/C vacuum check valve and observe the gauge reading.
5 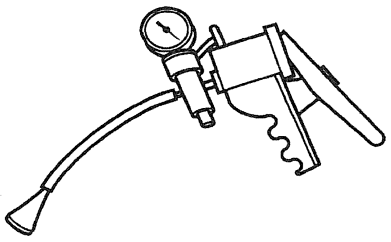 AL0150-A	5 If the vacuum loss exceeds 3.37 kPa (1 inch-Hg) per minute, remove the A/C vacuum check valve from the vacuum pump and plug the vacuum hose. Pull a vacuum with the vacuum pump to be certain that the hose and vacuum pump are not the cause of the leak. • Does the A/C vacuum check valve lose more than 3.37 kPa (1 inch-Hg) of vacuum in one minute? → **Yes** REPLACE the A/C vacuum check valve. TEST the system for normal operation. → **No** RECONNECT the A/C vacuum check valve. GO to **C7**.

Official Licensed Product
Ford Motor Company®

(Continued)

DIAGNOSIS AND TESTING (Continued)

PINPOINT TEST C: IMPROPER/ERRATIC DIRECTION OF AIR FLOW FROM OUTLET(S) (Continued)

TEST CONDITIONS	TEST DETAILS/RESULTS/ACTIONS
C7 CHECK THE VACUUM RESERVOIR	
1 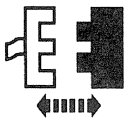 A/C Vacuum Reservoir Tank 2 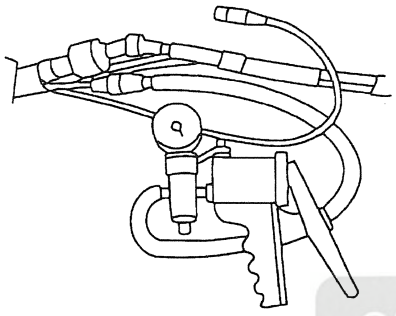 AL0151-A	2 Use a vacuum pump to leak test the A/C vacuum reservoir tank. • Does the reservoir leak? → **Yes** REPLACE the A/C vacuum reservoir tank and bracket. TEST the system for normal operation. → **No** GO to **C8**.
C8 CHECK THE SUPPLY HOSE	
1 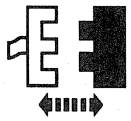 EATC Vacuum Harness 2 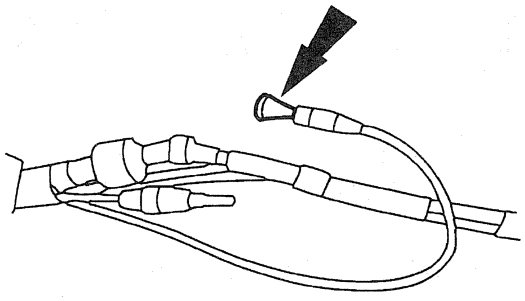 AL0152-B	2 Plug the vacuum supply hose at the vacuum reservoir tank connection.

Official Licensed Product
Ford Motor Company

(Continued)

DIAGNOSIS AND TESTING (Continued)

PINPOINT TEST C: IMPROPER/ERRATIC DIRECTION OF AIR FLOW FROM OUTLET(S) (Continued)

TEST CONDITIONS	TEST DETAILS/RESULTS/ACTIONS
C8 CHECK THE SUPPLY HOSE (Continued)	
3 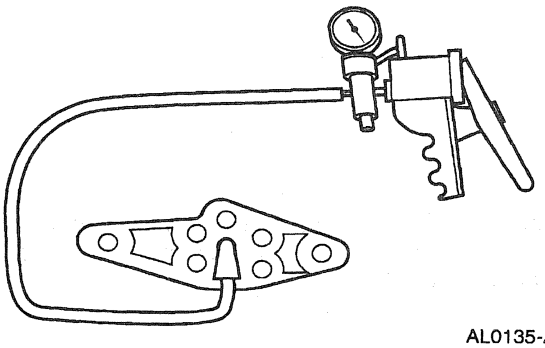 AL0135-A	3 Use a vacuum pump to leak test the vacuum harness. • Does the vacuum harness leak? → **Yes** REPAIR or REPLACE the vacuum harness. TEST the system for normal operation. → **No** RECONNECT the vacuum harness. GO to **C9**.
C9 CHECK THE CONTROL ASSEMBLY	
1 2 Inline Vacuum Harness 3 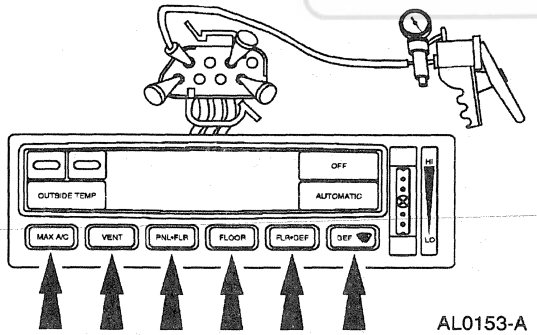 AL0153-A	3 Connect a vacuum pump to the black hose and plug the other hoses. — At each manual override mode, apply 51 kPa (15 inches-Hg) of vacuum and check for vacuum leakage. • Does the vacuum leakage exceed 3.37 kPa (1 inch-Hg) per minute? → **Yes** NOTE the manual override selection where the vacuum leaks and GO to **C10**. → **No** RECONNECT the inline vacuum harness connector. GO to **C11**.

Official Licensed Product
Ford Motor Company

(Continued)

DIAGNOSIS AND TESTING (Continued)

PINPOINT TEST C: IMPROPER/ERRATIC DIRECTION OF AIR FLOW FROM OUTLET(S) (Continued)

TEST CONDITIONS	TEST DETAILS/RESULTS/ACTIONS
C10 LEAK TEST THE CONTROL ASSEMBLY	
1 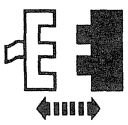 EATC Vacuum Harness	
2 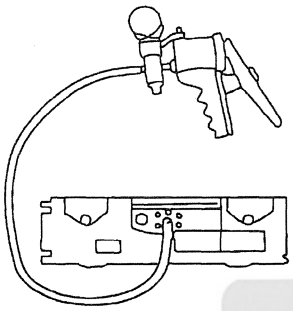 AL0154-A	2 Connect a vacuum pump to the EATC vacuum supply port and plug the control port that indicated a leak in Step C9.
3 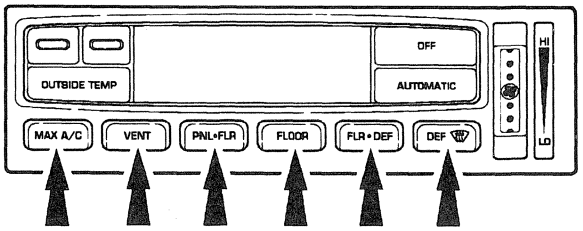 AL0155-A	3 Select the manual override button that indicated a leak in Step C9 and then apply 51 kPa (15 inches-Hg) of vacuum. • Does the vacuum drop exceed 1.68 kPa (0.5 in-Hg) per minute? → **Yes** REPLACE the EATC module. TEST the system for normal operation. → **No** GO to **C12**.

Official Licensed Product
Ford Motor Co.

(Continued)

DIAGNOSIS AND TESTING (Continued)

PINPOINT TEST C: IMPROPER/ERRATIC DIRECTION OF AIR FLOW FROM OUTLET(S) (Continued)

TEST CONDITIONS	TEST DETAILS/RESULTS/ACTIONS
C11 CHECK THE VACUUM HARNESS FOR BLOCKAGE	
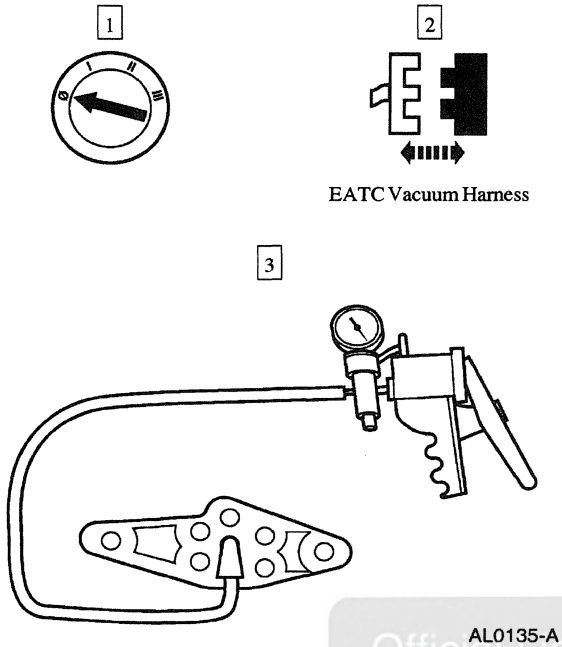	3 Connect a vacuum pump to the EATC supply hose and try to pull a vacuum. If the vacuum pump can pull a vacuum, the hose is plugged. If the vacuum pump pulls a partial vacuum, the hose is restricted. • Is the hose plugged or restricted? → **Yes** REPAIR or REPLACE the vacuum harness. TEST the system for normal operation. → **No** RECONNECT the EATC vacuum harness. GO to **C15**.
C12 LEAK TEST THE JUMPER VACUUM HARNESS	
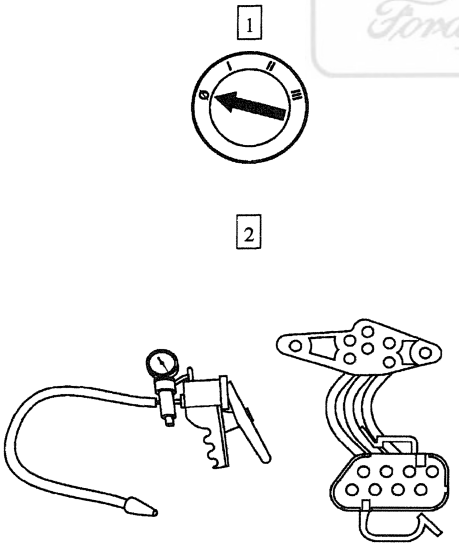	2 Plug one end of the suspect hose and attach a vacuum tester to the other end. Apply 51 kPa (15 inches-Hg) of vacuum to the hose. • Is there vacuum leakage? → **Yes** REPAIR or REPLACE the vacuum jumper harness. TEST the system for normal operation. → **No** REPLACE the EATC module. TEST the system for normal operation.

Official Licensed Product Ford Motor Company

(Continued)

DIAGNOSIS AND TESTING (Continued)

PINPOINT TEST C: IMPROPER/ERRATIC DIRECTION OF AIR FLOW FROM OUTLET(S) (Continued)

TEST CONDITIONS	TEST DETAILS/RESULTS/ACTIONS
C13 EVALUATE THE SYSTEM AIR FLOW	
	1 Evaluate the system air flow; refer to the system air flow description in this section. • Is the air flow in Step C1 correct for each manual override button pressed? → **Yes** GO to **C14**. → **No** GO to **C15**.
C14 ISOLATE THE LEAKING VACUUM CIRCUIT	
1 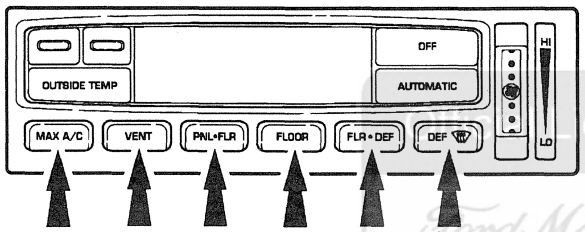 AL0155-A	1 Check for proper air flow from each manual override button during engine speed acceleration. • Does the air flow go to the defroster outlets during acceleration? → **Yes** GO to **C19**. → **No** GO to **C15**.
C15 REVIEW THE VEHICLE HISTORY	
1 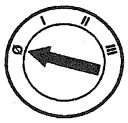	2 Review the vehicle history. • Did the climate control system function properly prior to this complaint? → **Yes** GO to **C18**. → **No** GO to **C16**.

(Continued)

Licensed Product Ford Motor Company

DIAGNOSIS AND TESTING (Continued)

PINPOINT TEST C: IMPROPER/ERRATIC DIRECTION OF AIR FLOW FROM OUTLET(S) (Continued)

TEST CONDITIONS	TEST DETAILS/RESULTS/ACTIONS
C16 CHECK THE VACUUM MOTOR HOSES	
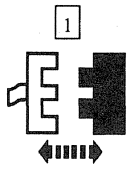 Vacuum Motors 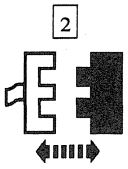 EATC Vacuum Harness 3 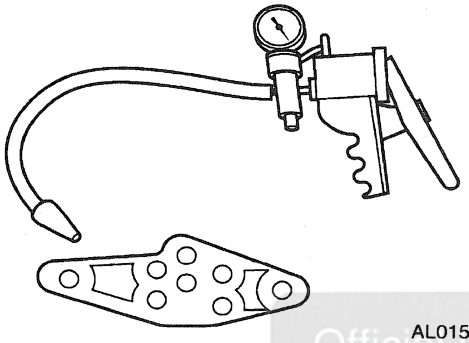 AL0157-A	3 Connect a vacuum pump to each hose and try to pull a vacuum. If the pump can pull a vacuum, the hose is plugged. If the pump pulls a partial vacuum, the hose is restricted. • Is the hose plugged or restricted? → **Yes** REPAIR or REPLACE the vacuum hose. TEST the system for normal operation. → **No** GO to **C17**.
C17 CHECK THE VACUUM HARNESS	
	1 Compare the vacuum hose color in each vacuum harness to the electronic automatic temperature control vacuum connector end view. • Does the hose color agree with the chart? → **Yes** GO to **C18**. → **No** REPLACE the vacuum harness. TEST the system for normal operation.
C18 CHECK THE A/C VACUUM CIRCUIT	
	1 Check the A/C vacuum circuit for indications of a pinched or kinked vacuum hose. • Are there indications that the hose is pinched or kinked? → **Yes** REPOSITION the vacuum hose. TEST the system for normal operation. → **No** GO to **C19**.

Official Licensed Product
Ford Motor Company

(Continued)

DIAGNOSIS AND TESTING (Continued)

PINPOINT TEST C: IMPROPER/ERRATIC DIRECTION OF AIR FLOW FROM OUTLET(S) (Continued)

TEST CONDITIONS	TEST DETAILS/RESULTS/ACTIONS
C19 CHECK THE VACUUM CIRCUIT CONNECTIONS	
	1 Check each vacuum hose connection to determine if it is partially connected or disconnected. • Is a vacuum hose disconnected or partially connected? → **Yes** RECONNECT the hose. TEST the system for normal operation. → **No** GO to **C20**.
C20 CHECK THE VACUUM HOSE	
2 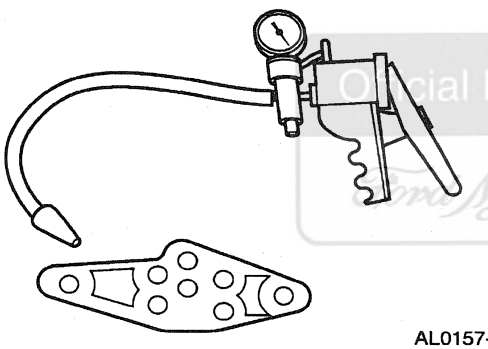 AL0157-A	1 Disconnect the suspect hose. 2 Plug one end of the hose and attach a vacuum pump to the other end. Check for a leak in the hose. • Does the vacuum hose leak? → **Yes** REPAIR or REPLACE the hose. TEST the system for normal operation. → **No** GO to **C21**.

Official Licensed Product Ford Motor Company

(Continued)

DIAGNOSIS AND TESTING (Continued)

PINPOINT TEST C: IMPROPER/ERRATIC DIRECTION OF AIR FLOW FROM OUTLET(S) (Continued)

TEST CONDITIONS	TEST DETAILS/RESULTS/ACTIONS
C21 CHECK THE VACUUM CONTROL MOTOR	
1 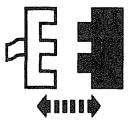 Vacuum Control Motor 2 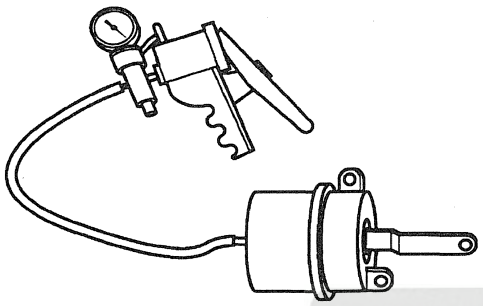 AL0136-A	2 Check the vacuum control motor for leaks with a vacuum pump. • Does the vacuum control motor hold a vacuum? → **Yes** GO to **C22**. → **No** REPLACE the vacuum control motor. TEST the system for normal operation.
C22 CHECK THE VACUUM CONTROL MOTOR INSTALLATION	
1 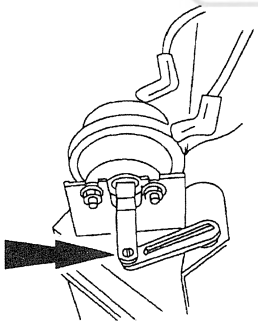 AL0158-A	1 Check the attachment of the vacuum control motor arm to the damper door. • Is the vacuum control motor arm attached to the door or door crank arm? → **Yes** REPAIR the damper door. TEST the system for normal operation. → **No** CONNECT the vacuum control motor arm to the door crank arm. TEST the system for normal operation.

Official Licensed Product
Ford Motor Company

DIAGNOSIS AND TESTING (Continued)

PINPOINT TEST D: INSUFFICIENT, ERRATIC OR NO HEAT

TEST CONDITIONS	TEST DETAILS/RESULTS/ACTIONS
D1 CHECK FOR PROPER ENGINE COOLANT LEVEL	
1 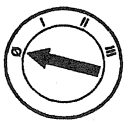 2 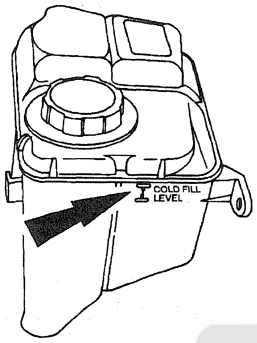 AL0549-A	2 Check the engine coolant level when hot and cold. • Is the engine coolant at proper level (hot/cold) as indicated on the engine coolant recovery reservoir? → **Yes** GO to **D2.** → **No** GO to **D3.**
D2 CHECK FOR HOT WATER TO THE HEATER CORE INLET HOSE	
WARNING: THE HEATER CORE INLET HOSE WILL BECOME TOO HOT TO HANDLE AND MAY CAUSE SERIOUS BURNS IF THE SYSTEM IS WORKING CORRECTLY. **NOTE:** Be sure that the inlet hose flow restrictor is in place and is undamaged.	
1 Start Engine	2 Allow the engine to reach normal operating temperature.

(Continued)

DIAGNOSIS AND TESTING (Continued)

PINPOINT TEST D: INSUFFICIENT, ERRATIC OR NO HEAT (Continued)

TEST CONDITIONS	TEST DETAILS/RESULTS/ACTIONS
D2 CHECK FOR HOT WATER TO THE HEATER CORE INLET HOSE (Continued)	
3 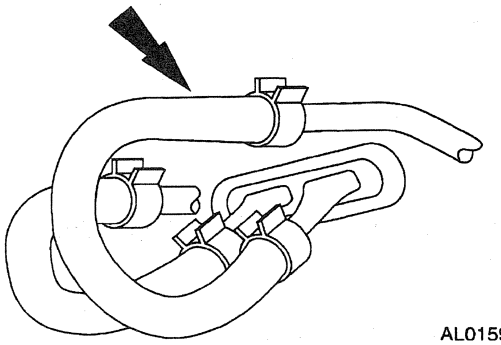 AL0159-A	3 Feel the heater core inlet hose. • Is the heater core inlet hose too hot to handle? → **Yes** GO to **D4**. → **No** GO to Section 303-03.
D3 CHECK THE COOLANT SYSTEM INCLUDING THE RADIATOR CAP FOR LEAKS	
1 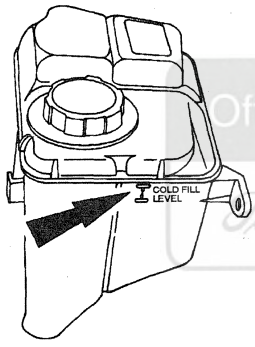 AL0549-A	1 Fill the engine cooling system to the specified level. 2 Pressure check the engine cooling system; refer to Section 303-03. It is not necessary to check the components separately at this time. • Does the engine cooling system, including the radiator cap, hold pressure? → **Yes** GO to **D4**. → **No** Pressure test the heater core.

Official Licensed Product
Ford Motor Company

(Continued)

DIAGNOSIS AND TESTING (Continued)

PINPOINT TEST D: INSUFFICIENT, ERRATIC OR NO HEAT (Continued)

TEST CONDITIONS	TEST DETAILS/RESULTS/ACTIONS
D4 CHECK THE HEATER CORE OUTLET HOSE FOR HOT WATER	
1 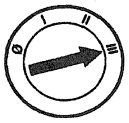 Start Engine	
	2 Allow the engine to reach normal operating temperature.
3 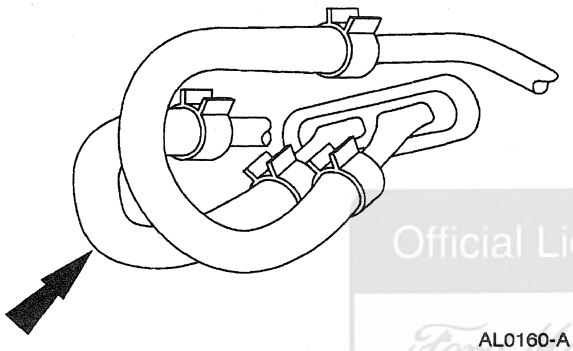 AL0160-A	3 Feel the heater core outlet hose. • Is the heater core outlet hose cool or cold? → **Yes** TEST the heater core for a plugged or partial plugged condition. → **No** GO to **DTC B1249**.

Official Licensed Product
Ford Motor Company

DIAGNOSIS AND TESTING (Continued)

PINPOINT TEST E: THE A/C DOES NOT OPERATE/DOES NOT OPERATE PROPERLY

TEST CONDITIONS	TEST DETAILS/RESULTS/ACTIONS
E1 CHECK THE A/C CLUTCH OPERATION	
NOTE: Outside temperature must be above 10°C (50°F) for A/C compressor operation.	
1 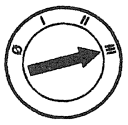 Start Engine	
2 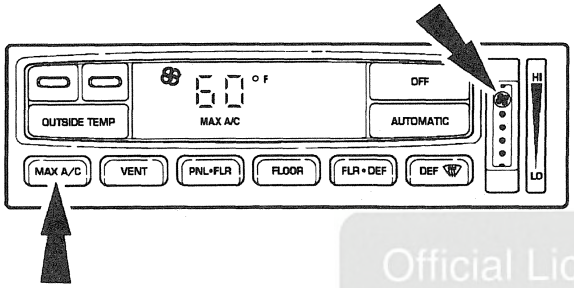 AL0137-A	2 Press the override button for MAX A/C operation and rotate the blower motor speed control fully up.
3 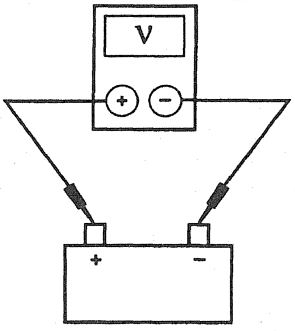 L10084-A	3 Check the voltage at the battery (if not 12 or greater volts, refer to Section 414-00 for diagnosis and testing of the charging system). • Does the A/C clutch engage? → **Yes** The A/C clutch circuit is functioning properly. RETURN to the Symptom Chart. → **No** GO to **E2**.

Official Licensed Product
Ford Motor Company

(Continued)

DIAGNOSIS AND TESTING (Continued)

PINPOINT TEST E: THE A/C DOES NOT OPERATE/DOES NOT OPERATE PROPERLY (Continued)

TEST CONDITIONS	TEST DETAILS/RESULTS/ACTIONS
E2 BYPASS THE A/C CYCLING SWITCH	
1 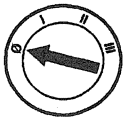 2 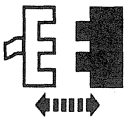 A/C Cycling Switch C169	
3 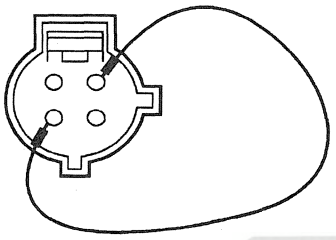 AL0112-A	3 Connect a jumper lead between the A/C cycling switch connector C169, Circuit 1040 (R/BK) and Circuit 198 (DG/O).
4 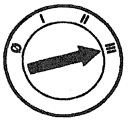 Start Engine	
5 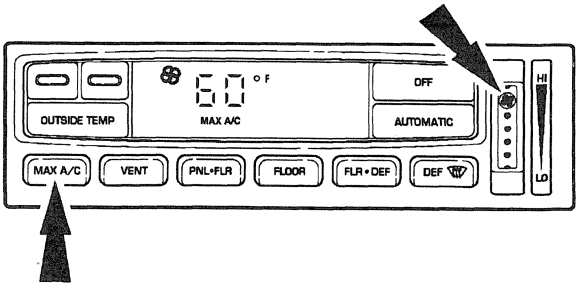 AL0137-A	5 Press the override button for MAX A/C operation and rotate the blower motor speed control fully up. • Does the A/C compressor clutch engage? → **Yes** RECONNECT the A/C cycling switch. GO to **E3**. → **No** GO to **E4**.

Official Licensed Product
Ford Motor Company

(Continued)

DIAGNOSIS AND TESTING (Continued)

PINPOINT TEST E: THE A/C DOES NOT OPERATE/DOES NOT OPERATE PROPERLY (Continued)

TEST CONDITIONS	TEST DETAILS/RESULTS/ACTIONS
E3 CHECK THE REFRIGERANT SYSTEM PRESSURE	
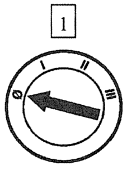	2 Connect the manifold set to the service ports; refer to Manifold Gauge Set Connection in this section. • Is the pressure between 345 kPa (50 psi) and 2758 kPa (400 psi)? → **Yes** REPLACE the A/C cycling switch. TEST the system for normal operation. → **No** CHECK the system for refrigerant system leaks; refer to Leak Detection — Using the Automatic Calibration Halogen Leak Detector or Leak Detection — Using Tracer Dye in this section.
E4 CHECK THE VOLTAGE AT THE A/C CYCLING SWITCH	
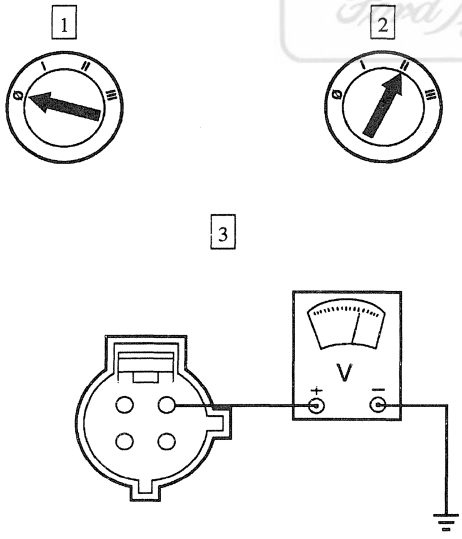	3 Measure the voltage between the A/C cycling switch connector C169 at Circuit 1040 (R/BK) and ground. • Is the voltage greater than 10 volts? → **Yes** GO to **E8**. → **No** GO to **E5**.

(Continued)

Official Licensed Product Ford Motor Company

DIAGNOSIS AND TESTING (Continued)

PINPOINT TEST E: THE A/C DOES NOT OPERATE/DOES NOT OPERATE PROPERLY (Continued)

TEST CONDITIONS	TEST DETAILS/RESULTS/ACTIONS
E5 CHECK FUSE 34 (15A)	
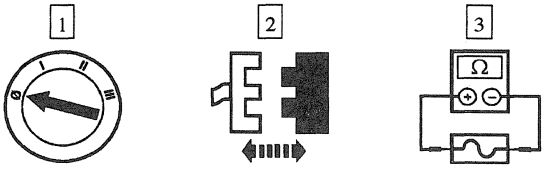 Junction Panel Fuse 34 (15A) Junction Panel Fuse 34 (15A)	• Is Fuse 34 (15A) OK? → **Yes** REPAIR Circuit 1040 (R/BK) for an open. TEST the system for normal operation. → **No** GO to **E6**.
E6 CHECK CIRCUIT 1040 (R/BK) FOR A SHORT	
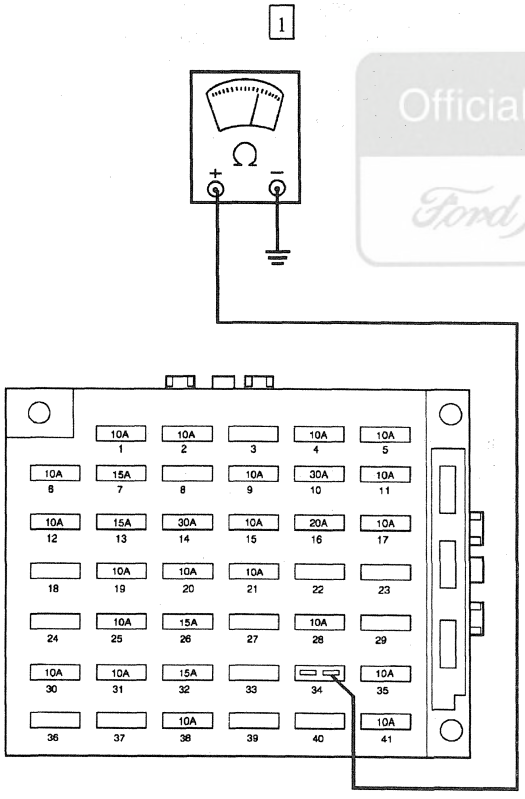 AL0117-B	1 Measure the resistance between the fuse junction panel Fuse 34 socket at Circuit 1040 (R/BK) and ground. • Is the resistance greater than 10,000 ohms? → **Yes** GO to **E7**. → **No** REPAIR Circuit 1040 (R/BK) for a short to ground. TEST the system for normal operation.

Official Licensed Product
Ford Motor Company®

(Continued)

DIAGNOSIS AND TESTING (Continued)

PINPOINT TEST E: THE A/C DOES NOT OPERATE/DOES NOT OPERATE PROPERLY (Continued)

TEST CONDITIONS	TEST DETAILS/RESULTS/ACTIONS
E7 CHECK CIRCUIT 198 (DG/O) FOR A SHORT	
1 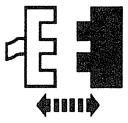 EATC Module C272 2 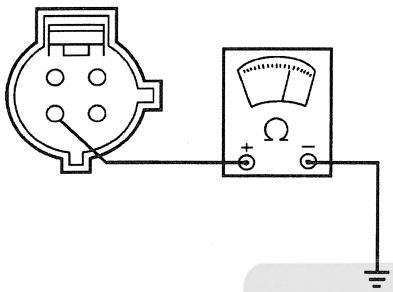 AL0162-A	2 Measure the resistance between the A/C cycling switch connector C169, Circuit 198 (DG/O) and ground. • Is the resistance greater than 10,000 ohms? → **Yes** REPLACE the EATC module. TEST the system for normal operation. → **No** REPAIR Circuit 198 (DG/O) for a short to ground. TEST the system for normal operation.
E8 CHECK THE A/C CYCLING SWITCH	
1 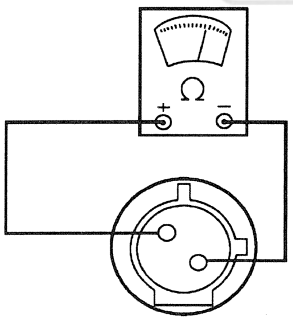 AL0114-A	1 Measure the resistance between the A/C cycling switch terminals. • Is the resistance less than 5 ohms? → **Yes** GO to **E9**. → **No** REPLACE the A/C cycling switch. TEST the system for normal operation.

Official Licensed Product
Ford Motor Company

(Continued)

DIAGNOSIS AND TESTING (Continued)

PINPOINT TEST E: THE A/C DOES NOT OPERATE/DOES NOT OPERATE PROPERLY (Continued)

TEST CONDITIONS	TEST DETAILS/RESULTS/ACTIONS
E9 CHECK THE VOLTAGE AT THE EATC MODULE	
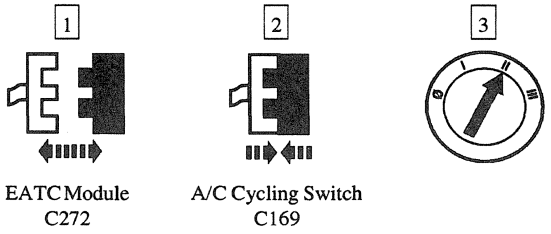 EATC Module C272 — A/C Cycling Switch C169 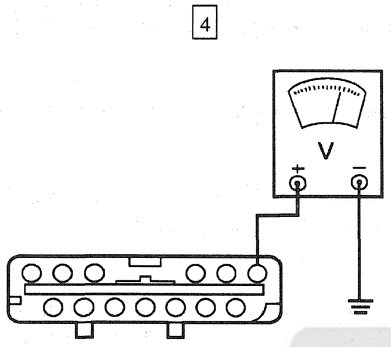 AL0115-B	4 Measure the voltage between the EATC module connector Pin C272-21, Circuit 198 (DG/O) and ground. • Is the voltage greater than 10 volts? → **Yes** GO to **E10**. → **No** REPAIR Circuit 198 (DG/O) for an open. TEST the system for normal operation.
E10 CHECK THE VOLTAGE TO THE A/C CLUTCH	
 A/C Compressor Clutch C180 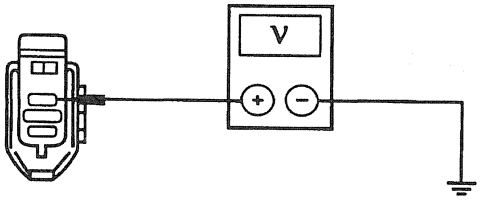 L10094-A	3 Measure the voltage between the A/C compressor clutch connector C180, Circuit 348 (P) and ground.

Official Licensed Product Ford Motor Company

(Continued)

DIAGNOSIS AND TESTING (Continued)

PINPOINT TEST E: THE A/C DOES NOT OPERATE/DOES NOT OPERATE PROPERLY (Continued)

TEST CONDITIONS	TEST DETAILS/RESULTS/ACTIONS
E10 CHECK THE VOLTAGE TO THE A/C CLUTCH (Continued)	
4 5 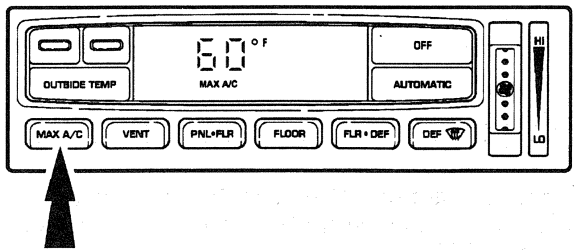 AL0109-A	5 Press the override button for MAX A/C operation. • Is the voltage greater than 10 volts? → **Yes** GO to **E11**. → **No** GO to **E14**.
E11 CHECK THE A/C CLUTCH GROUND CIRCUIT FOR AN OPEN	
1 2 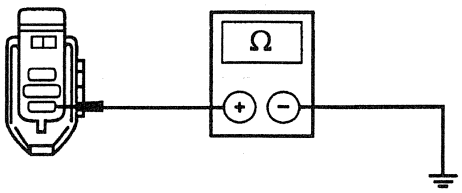 L10095-A	2 Measure the resistance between the A/C clutch connector C180, Circuit 57 (BK) and ground. • Is the resistance 1 ohm or less? → **Yes** GO to **E12**. → **No** REPAIR Circuit 57 (BK) for an open. TEST the system for normal operation.

(Continued)

DIAGNOSIS AND TESTING (Continued)

PINPOINT TEST E: THE A/C DOES NOT OPERATE/DOES NOT OPERATE PROPERLY (Continued)

TEST CONDITIONS	TEST DETAILS/RESULTS/ACTIONS
E12 CHECK THE A/C CLUTCH COIL RESISTANCE	
1 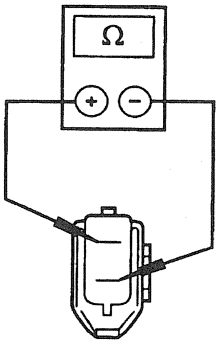 L10096-A	1 Measure the resistance between the A/C clutch terminals. • Is the resistance greater than 6 ohms? → **Yes** REPLACE the A/C clutch. TEST the system for normal operation. → **No** GO to **E13**.
E13 CHECK THE A/C CLUTCH FIELD COIL CURRENT DRAW	
1 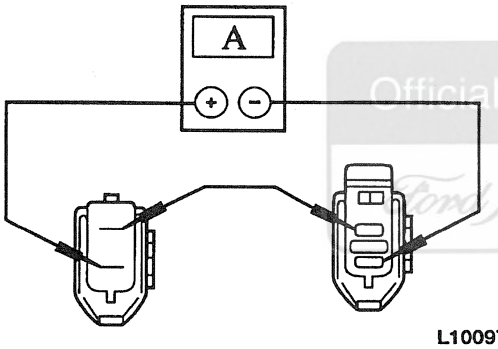 L10097-A 2 	1 Connect an ammeter between the A/C clutch field coil terminal and the A/C clutch connector C180, Circuit 57 (BK). Connect a jumper wire between the A/C clutch field coil terminal and the A/C clutch connector C180, Circuit 348 (P) to complete the circuit.

Official Licensed Product Ford Motor Company

(Continued)

DIAGNOSIS AND TESTING (Continued)

PINPOINT TEST E: THE A/C DOES NOT OPERATE/DOES NOT OPERATE PROPERLY (Continued)

TEST CONDITIONS	TEST DETAILS/RESULTS/ACTIONS
E13 CHECK THE A/C CLUTCH FIELD COIL CURRENT DRAW (Continued)	
3 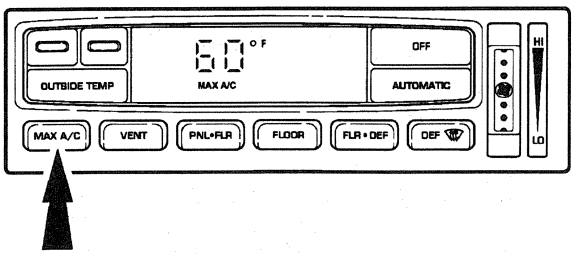 AL0109-A	3 Press the override button for MAX A/C operation. • Is the current draw between 2.5 and 4.5 amps? → **Yes** ADJUST the A/C clutch air gap; refer to A/C Clutch Air Gap Adjustment in this section. TEST the system for normal operation. → **No** REPLACE the A/C clutch. TEST the system for normal operation.
E14 CHECK THE INPUT VOLTAGE TO THE VARIABLE LOAD CONTROL MODULE PIN C106-4	
1 2 Variable Load Control Module C106 3 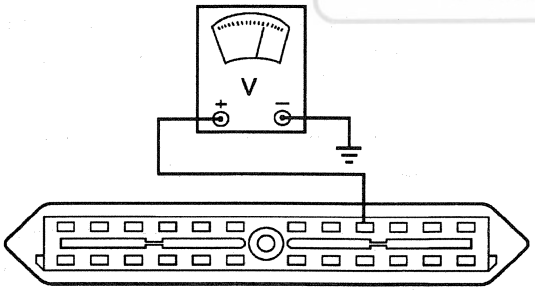 AL0116-B	3 Measure the voltage between the variable load control module connector Pin C106-4, Circuit 228 (DB) and ground. • Is voltage greater than 10 volts? → **Yes** GO to **E15**. → **No** GO to **E17**.

Official Licensed Product
Ford Motor Company

(Continued)

DIAGNOSIS AND TESTING (Continued)

PINPOINT TEST E: THE A/C DOES NOT OPERATE/DOES NOT OPERATE PROPERLY (Continued)

TEST CONDITIONS	TEST DETAILS/RESULTS/ACTIONS
E15 CHECK THE INPUT VOLTAGE TO THE VARIABLE LOAD CONTROL MODULE PIN C106-5	
1 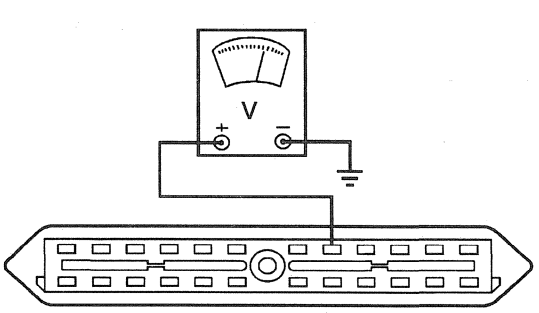 AL0260-B	1 Measure the voltage between the variable load control module connector Pin C106-5, Circuit 228 (DB) and ground. • Is the voltage greater than 10 volts? → **Yes** GO to **E16**. → **No** REPAIR Circuit 228 (DB) for an open between the VLCM connector Pin C106-5 and the splice. TEST the system for normal operation.
E16 CHECK CIRCUIT 348 (P) FOR AN OPEN	
1 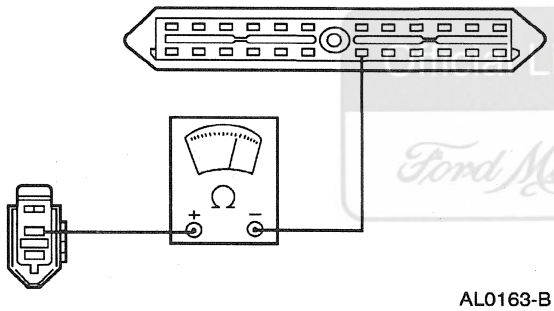 AL0163-B	1 Measure the resistance between the variable load control module connector Pin C106-18, Circuit 348 (P) and the A/C clutch connector C180. • Is the resistance less than 5 ohms? → **Yes** GO to **E20**. → **No** REPAIR Circuit 348 (P) for an open. TEST the system for normal operation.
E17 CHECK CIRCUIT 228 (DB) FOR AN OPEN	
1 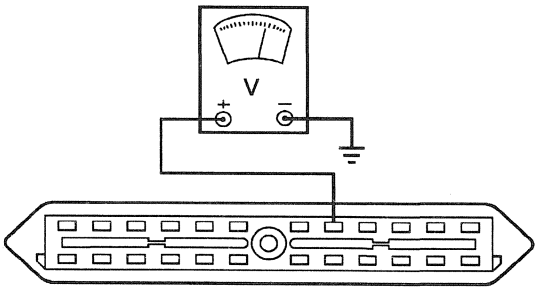 AL0260-B	1 Measure the voltage between the variable load control module connector Pin C106-5, Circuit 228 (DB) and ground. • Is the voltage greater than 10 volts? → **Yes** REPAIR Circuit 228 (DB) for an open between the VLCM connector Pin C106-4 and the splice. TEST the system for normal operation. → **No** GO to **E18**.

(Continued)

Ford Licensed Product
Ford Motor Company

DIAGNOSIS AND TESTING (Continued)

PINPOINT TEST E: THE A/C DOES NOT OPERATE/DOES NOT OPERATE PROPERLY (Continued)

TEST CONDITIONS	TEST DETAILS/RESULTS/ACTIONS
E18 CHECK FUSE 23 (40A)	
1 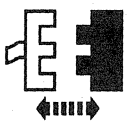 Power Distribution Box Fuse 23 (40A) 2 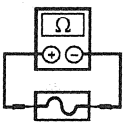 Power Distribution Box Fuse 23 (40A)	• Is Fuse 23 (40A) OK? → **Yes** REPAIR Circuit 228 (DB) for an open. TEST the system for normal operation. → **No** GO to **E19**.
E19 CHECK CIRCUIT 228 (DB) FOR A SHORT	
1 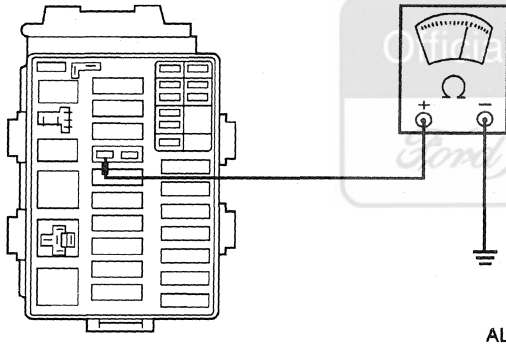 AL0164-A	1 Measure the resistance between the power distribution box Fuse 23 socket at Circuit 228 (DB) and ground. • Is the resistance greater than 10,000 ohms? → **Yes** GO to **E20**. → **No** REPAIR Circuit 228 (DB) for a short to ground. TEST the system for normal operation.
E20 CHECK CIRCUIT 348 (P) FOR A SHORT	
1 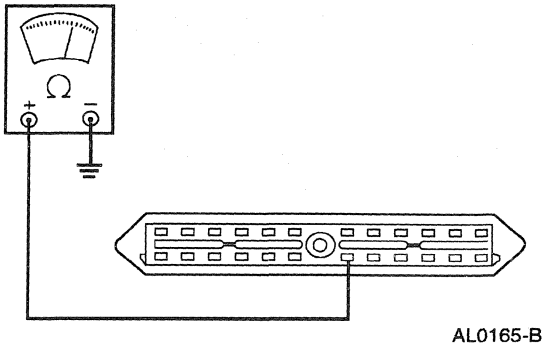 AL0165-B	1 Measure the resistance between the variable load control module connector Pin C106-18, Circuit 348 (P) and ground. • Is the resistance greater than 10,000 ohms? → **Yes** REFER to Powertrain Control/Emissions Diagnosis Manual [4]. → **No** REPAIR Circuit 348 (P) for a short to ground. TEST the system for normal operation.

Ford Motor Company Licensed Product

4 Can be purchased as a separate item.

DIAGNOSIS AND TESTING (Continued)

PINPOINT TEST F: INSUFFICIENT A/C COOLING

TEST CONDITIONS	TEST DETAILS/RESULTS/ACTIONS
F1 CHECK THE CENTER A/C REGISTER DISCHARGE TEMPERATURE	
2 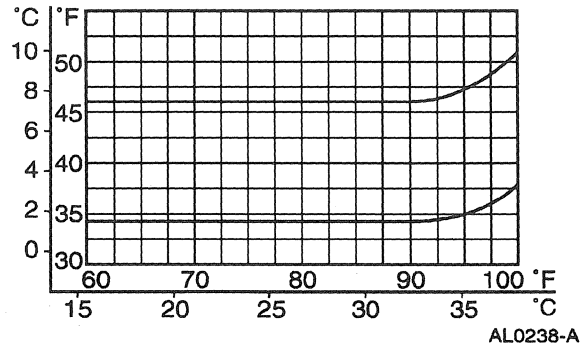 AL0238-A	1 Perform the Refrigerant System Tests; refer to General Procedures in this section. 2 Use the recorded data from the refrigerant system tests to plot a vertical line for ambient temperature and a horizontal line for center A/C register discharge temperature. • Is the intersection of the two lines within the upper and lower limits? → **Yes** The tests indicate that the system is functioning normally. → **No** GO to **F2**.
F2 CHECK FOR NORMAL DISCHARGE PRESSURE	
1 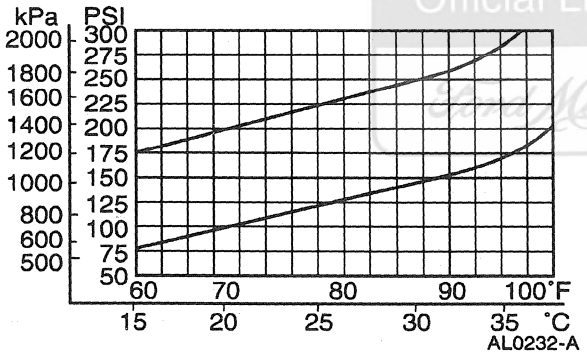 AL0232-A	1 Use the recorded data from the refrigerant system tests to plot a vertical line for ambient temperature and a horizontal line for compressor discharge (high) pressure. • Is the intersection of the two lines within the upper and lower limits? → **Yes** GO to **F3**. → **No** GO to **F8**.
F3 EVALUATE THE SYSTEM LOW PRESSURE PERFORMANCE	
1 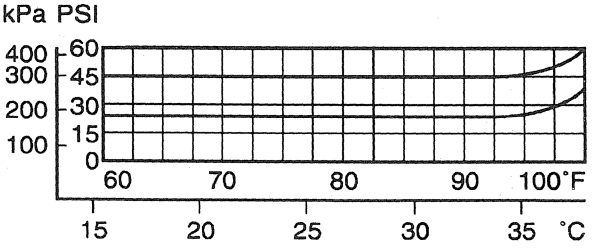 AL0233-A	1 Use the recorded data from the refrigerant system tests to plot a vertical line for ambient temperature and a horizontal line for compressor suction (low) pressure. • Is the intersection of the two lines within the upper and lower limits? → **Yes** GO to **F4**. → **No** GO to **F6**.

(Continued)

DIAGNOSIS AND TESTING (Continued)

PINPOINT TEST F: INSUFFICIENT A/C COOLING (Continued)

TEST CONDITIONS	TEST DETAILS/RESULTS/ACTIONS
F4 CHECK FOR A SLOW OR CONTINUOUS RUN A/C CLUTCH CYCLE RATE	
[1] 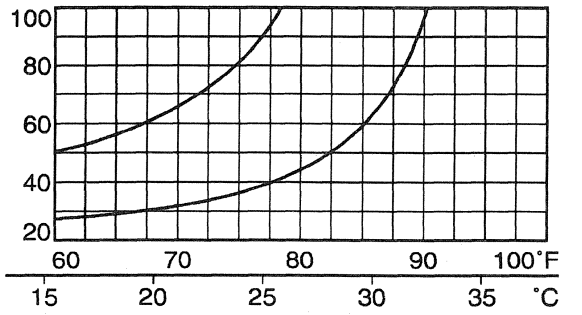 AL0236-A	[1] Use the recorded data from the refrigerant system tests to plot a vertical line for ambient temperature and a horizontal line for total A/C clutch cycle time (time ON plus time OFF) in seconds. • Is the intersection of the two lines above the upper limit? → **Yes** GO to **F5**. → **No** REPAIR the A/C evaporator core due to a partially restricted or plugged condition. TEST the system for normal operation.
F5 CHECK FOR A LONG OR CONTINUOUS A/C CLUTCH OFF TIME	
[1] 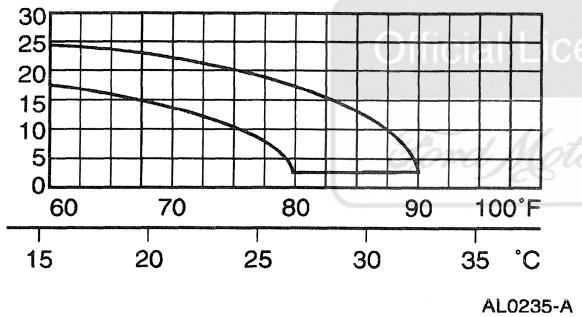 AL0235-A	[1] Use the recorded data from the refrigerant system tests to plot a vertical line for ambient temperature and a horizontal line for A/C clutch OFF time in seconds. • Is the intersection of the two lines above the upper limit? → **Yes** DISCHARGE and RECOVER the system to remove excessive moisture or refrigerant oil. TEST the system for normal operation. → **No** GO to **F7**.
F6 CHECK FOR A HIGH SUCTION PRESSURE	
	[1] Refer to the data plot used to evaluate the system low pressure performance in Step F3. • Is the intersection of the two lines above the upper limit? → **Yes** REMOVE the A/C evaporator core orifice to replace the missing or damaged (leaking) O-ring seals. TEST the system for normal operation. → **No** REPLACE the A/C cycling switch when the intersection of the two lines is below the lower limit. TEST the system for normal operation.

(Continued)

Official Licensed Product Ford Motor Company

DIAGNOSIS AND TESTING (Continued)

PINPOINT TEST F: INSUFFICIENT A/C COOLING (Continued)

TEST CONDITIONS	TEST DETAILS/RESULTS/ACTIONS
F7 CHECK THE AMBIENT TEMPERATURE	
	[1] Refer to the data plot used to evaluate the system A/C clutch OFF time in Step F5. • Is the ambient temperature above 26°C (80°F)? → **Yes** This is normal operation for the refrigerant system in high humidity conditions. → **No** DISCHARGE and RECOVER the system to correct an overcharge condition. TEST the system for normal operation.
F8 CHECK FOR A HIGH DISCHARGE PRESSURE	
	[1] Refer to the data plot used to evaluate the system high pressure performance in Step F2. • Is the intersection of the two lines above the upper limit? → **Yes** GO to **F9**. → **No** GO to **F11**.
F9 CHECK FOR A NORMAL LOW PRESSURE	
[1] 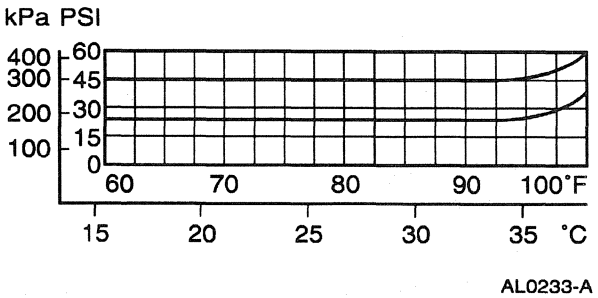 AL0233-A	[1] Use the recorded data from the refrigerant system tests to plot a vertical line for ambient temperature and a horizontal line for compressor suction (low) pressure. • Is the intersection of the two lines within the upper and lower limits? → **Yes** REFER to Section 303-03 to diagnose the engine for an overheating condition. TEST the system for normal operation. → **No** GO to **F10**.

(Continued)

Official Licensed Product
Ford Motor Company

DIAGNOSIS AND TESTING (Continued)

PINPOINT TEST F: INSUFFICIENT A/C COOLING (Continued)

TEST CONDITIONS	TEST DETAILS/RESULTS/ACTIONS
F10 CHECK FOR A NORMAL-TO-LOW SUCTION PRESSURE	
	1 Refer the to data plot used to evaluate the system low pressure performance in Step F9. • Is the intersection of the two lines below the lower limit? → **Yes** REPLACE the A/C evaporator core orifice due to a partially restricted or plugged condition. TEST the system for normal operation. → **No** INSPECT the A/C condenser core for partially blocked or inadequate air flow. TEST the system for normal operation.
F11 CHECK FOR A NORMAL SUCTION PRESSURE	
1 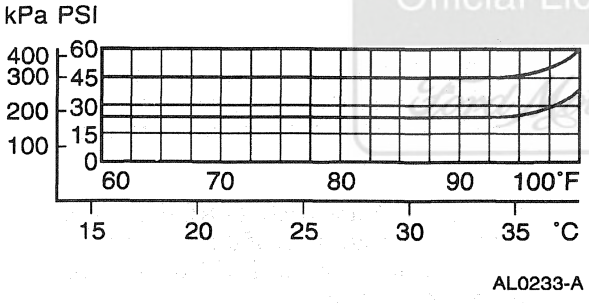 AL0233-A	1 Use the recorded data from the refrigerant system tests to plot a vertical line for ambient temperature and a horizontal line for compressor suction (low) pressure. • Is the intersection of the two lines within the upper and lower limits? → **Yes** GO to **F12.** → **No** GO to **F15.**
F12 CHECK FOR A SLOW A/C CLUTCH CYCLE RATE	
1 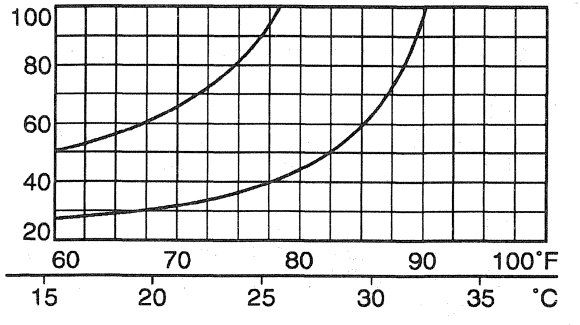 AL0236-A	1 Use the recorded data from the refrigerant system tests to plot a vertical line for ambient temperature and a horizontal line for total A/C clutch cycle time (time ON plus time OFF) in seconds. • Is the intersection of the two lines above the upper limit? → **Yes** REPLACE the evaporator to compressor suction line due to a partially restricted or plugged condition. TEST the system for normal operation. → **No** GO to **F13.**

(Continued)

Official Licensed Product Ford Motor Company

DIAGNOSIS AND TESTING (Continued)

PINPOINT TEST F: INSUFFICIENT A/C COOLING (Continued)

TEST CONDITIONS	TEST DETAILS/RESULTS/ACTIONS
F13 CHECK FOR A NORMAL A/C CLUTCH OFF TIME	
[1] 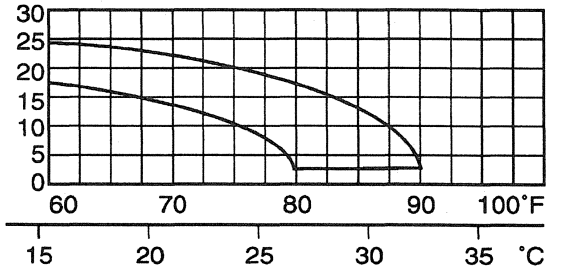 AL0235-A	[1] Use the recorded data from the refrigerant system tests to plot a vertical line for ambient temperature and a horizontal line for A/C clutch OFF time in seconds. • Is the intersection of the two lines within the upper and lower limits? → **Yes** INSPECT the A/C evaporator core for low or restricted air flow. TEST the system for normal operation. → **No** GO to **F14.**
F14 CHECK FOR A LONG A/C CLUTCH OFF TIME	
	[1] Refer to the data plot used to evaluate the system A/C clutch OFF time performance in Step F13. • Is the intersection of the two lines above the upper limit? → **Yes** REPLACE the A/C condenser core due to a partially restricted or plugged condition. TEST the system for normal operation. → **No** EVACUATE and RECHARGE the system when the intersection of the two lines is below the lower limit. TEST the system for normal operation.
F15 CHECK FOR A MISSING A/C EVAPORATOR CORE ORIFICE	
	[1] Remove the A/C evaporator core orifice; refer to Section 412-03. • Is the A/C evaporator core orifice missing? → **Yes** REPLACE the A/C evaporator core orifice. TEST the system for normal operation. → **No** REPLACE the A/C compressor due to low performance. TEST the system for normal operation.

Official Licensed Part
Ford Motor Company

DIAGNOSIS AND TESTING (Continued)

PINPOINT TEST G: THE BLOWER MOTOR DOES NOT OPERATE

TEST CONDITIONS	TEST DETAILS/RESULTS/ACTIONS
G1 CHECK THE BLOWER MOTOR SPEED CONTROL SUPPLY VOLTAGE	
Blower Motor Speed Control C210 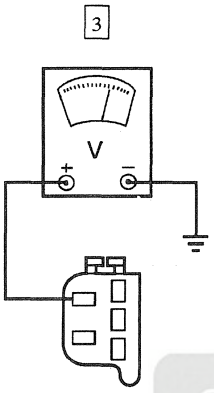 AL0118-A	3 Measure the voltage between the blower motor speed control connector Pin C210-1, Circuit 536 (BK/LG) and ground. • Is the voltage greater than 9 volts? → **Yes** GO to **G15**. → **No** GO to **G2**.
G2 CHECK THE BLOWER MOTOR RELAY VOLTAGE	
Blower Motor Relay C2002 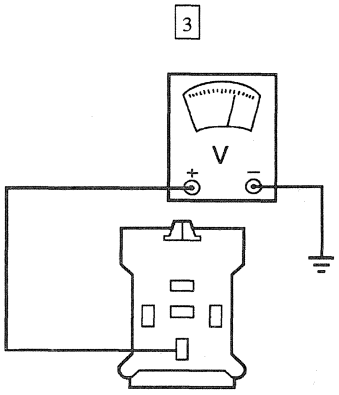 AL0119-B	3 Measure the voltage between the blower motor relay connector Pin C2002-30, Circuit 181 (BR/O) and ground. • Is the voltage greater than 9 volts? → **Yes** GO to **G8**. → **No** GO to **G3**.

Official Licensed Product Ford Motor Company

(Continued)

DIAGNOSIS AND TESTING (Continued)

PINPOINT TEST G: THE BLOWER MOTOR DOES NOT OPERATE (Continued)

TEST CONDITIONS	TEST DETAILS/RESULTS/ACTIONS
G3 CHECK FUSE 29 (40A)	
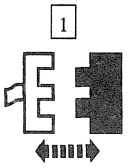 Power Distribution Box Fuse 29 (40A) 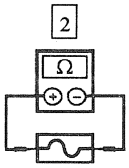 Power Distribution Box Fuse 29 (40A)	• Is Fuse 29 (40A) OK? → **Yes** REPAIR Circuit 181 (BR/O) for an open. TEST the system for normal operation. → **No** GO to **G4**.
G4 CHECK CIRCUIT 181 (BR/O) FOR A SHORT	
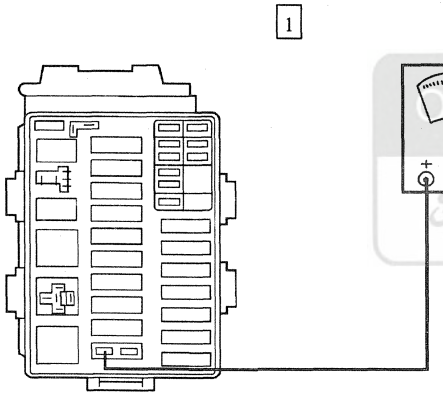 AL0166-A	1 Measure the resistance between the power distribution box Fuse 29 socket at Circuit 181 (BR/O) and ground. • Is the resistance greater than 10,000 ohms? → **Yes** GO to **G5**. → **No** REPAIR Circuit 181 (BR/O) for a short to ground. TEST the system for normal operation.
G5 CHECK CIRCUIT 536 (BK/LG) FOR A SHORT	
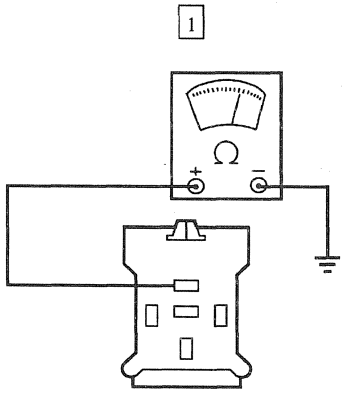 AL0167-B	1 Measure the resistance between the blower motor relay connector Pin C2002-87, Circuit 536 (BK/LG) and ground. • Is the resistance greater than 10,000 ohms? → **Yes** GO to **G6**. → **No** REPAIR Circuit 536 (BK/LG) for a short to ground. TEST the system for normal operation.

Ford Motor Company Official Licensed Product

(Continued)

DIAGNOSIS AND TESTING (Continued)

PINPOINT TEST G: THE BLOWER MOTOR DOES NOT OPERATE (Continued)

TEST CONDITIONS	TEST DETAILS/RESULTS/ACTIONS
G6 CHECK THE BLOWER MOTOR CURRENT DRAW	
1 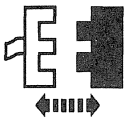 Blower Motor C265	2 Measure the current draw using the Alternator, Regulator, Battery and Starter Tester (ARBST) between the blower motor connector C265 and a known good battery. • Is the current draw 9.2 amps or less? → **Yes** GO to **G7**. → **No** REPLACE the blower motor. TEST the system for normal operation.
G7 BYPASS THE BLOWER MOTOR RELAY	
1 Blower Motor 2 Blower Motor Speed Control C210 3 Power Distribution Box Fuse 29 (40A) 4 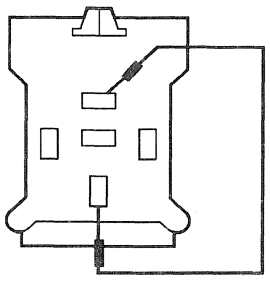 AL0171-B	4 Connect a 12-gauge jumper wire between the blower motor relay connector Pin C2002-30, Circuit 181 (BR/O) and Pin C2002-87, Circuit 536 (BK/LG). • Does the power distribution box Fuse 29 (40A) open? → **Yes** REPLACE the A/C blower motor speed control. TEST the system for normal operation. → **No** REPLACE the blower motor relay. TEST the system for normal operation.

Unlicensed Product Ford Motor Company

(Continued)

DIAGNOSIS AND TESTING (Continued)

PINPOINT TEST G: THE BLOWER MOTOR DOES NOT OPERATE (Continued)

TEST CONDITIONS	TEST DETAILS/RESULTS/ACTIONS
G8 CHECK THE RELAY SUPPLY VOLTAGE	
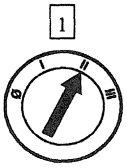 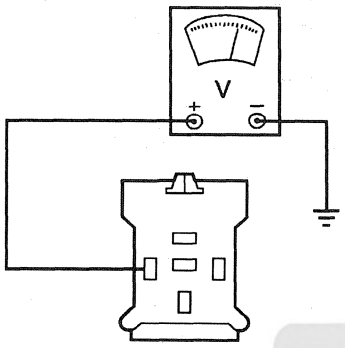 AL0120-B	2 Measure the voltage between the blower motor relay connector Pin C2002-85, Circuit 364 (BK/LG) and ground. • Is the voltage greater than 9 volts? → **Yes** GO to **G9**. → **No** GO to **G12**.
G9 CHECK CIRCUIT 1423 (W/BK) FOR AN OPEN	
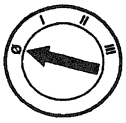 EATC Module C273 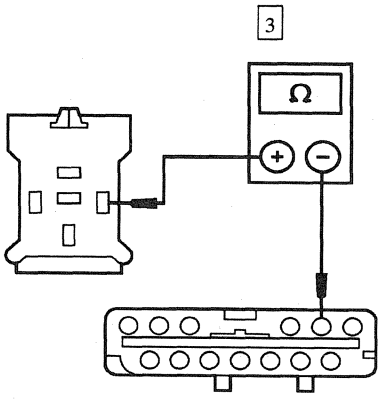 AM0750-A	3 Measure the resistance between the blower motor relay connector Pin C2002-86, Circuit 1423 (W/BK) and EATC module connector Pin C273-16. • Is the resistance less than 5 ohms? → **Yes** GO to **G10**. → **No** REPAIR Circuit 1423 (W/BK) for an open. TEST the system for normal operation.

Ford Motor Company

(Continued)

DIAGNOSIS AND TESTING (Continued)

PINPOINT TEST G: THE BLOWER MOTOR DOES NOT OPERATE (Continued)

TEST CONDITIONS	TEST DETAILS/RESULTS/ACTIONS
G10 CHECK CIRCUIT 536 (BK/LG) FOR AN OPEN	
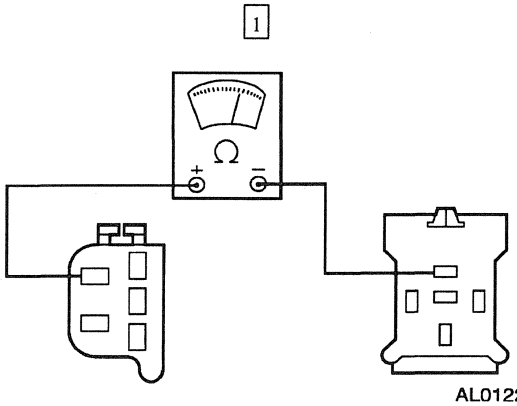 AL0122-B	1 Measure the resistance between the blower motor relay connector Pin C2002-87, Circuit 536 (BK/LG) and the blower motor speed control connector Pin C210-1. • Is the resistance less than 5 ohms? → **Yes** GO to **G11**. → **No** REPAIR Circuit 536 (BK/LG) for an open. TEST the system for normal operation.
G11 BYPASS THE EATC MODULE	
Blower Motor Relay C2002 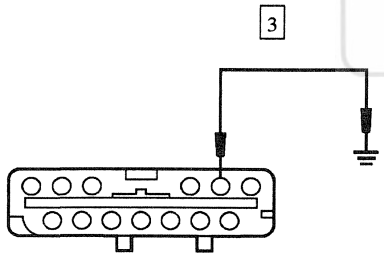 AM0751-A	3 Connect a jumper wire between the EATC module connector Pin C273-16, Circuit 1423 (W/BK) and ground.

Official Licensed Product
Ford Motor Company

(Continued)

DIAGNOSIS AND TESTING (Continued)

PINPOINT TEST G: THE BLOWER MOTOR DOES NOT OPERATE (Continued)

TEST CONDITIONS	TEST DETAILS/RESULTS/ACTIONS
G11 BYPASS THE EATC MODULE (Continued)	
4 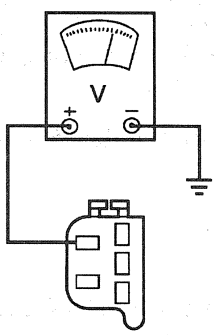 AL0118-A	4 Measure the voltage between the blower motor speed control connector Pin C210-1, Circuit 536 (BK/LG) and ground. • Is the voltage greater than 9 volts? → **Yes** REPLACE the EATC module. TEST the system for normal operation. → **No** REPLACE the blower motor relay. TEST the system for normal operation.
G12 CHECK FUSE 9 (10A)	
1 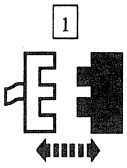 Fuse Junction Panel Fuse 9 (10A) 2 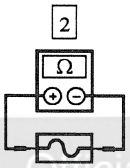 Fuse Junction Panel Fuse 9 (10A)	• Is Fuse 9 (10A) OK? → **Yes** REPAIR Circuit 364 (BK/LG) for an open. TEST the system for normal operation. → **No** GO to **G13**.

Official Licensed Product
Ford Motor Company

(Continued)

DIAGNOSIS AND TESTING (Continued)

PINPOINT TEST G: THE BLOWER MOTOR DOES NOT OPERATE (Continued)

TEST CONDITIONS	TEST DETAILS/RESULTS/ACTIONS
G13 CHECK CIRCUIT 364 (BK/LG) FOR A SHORT	
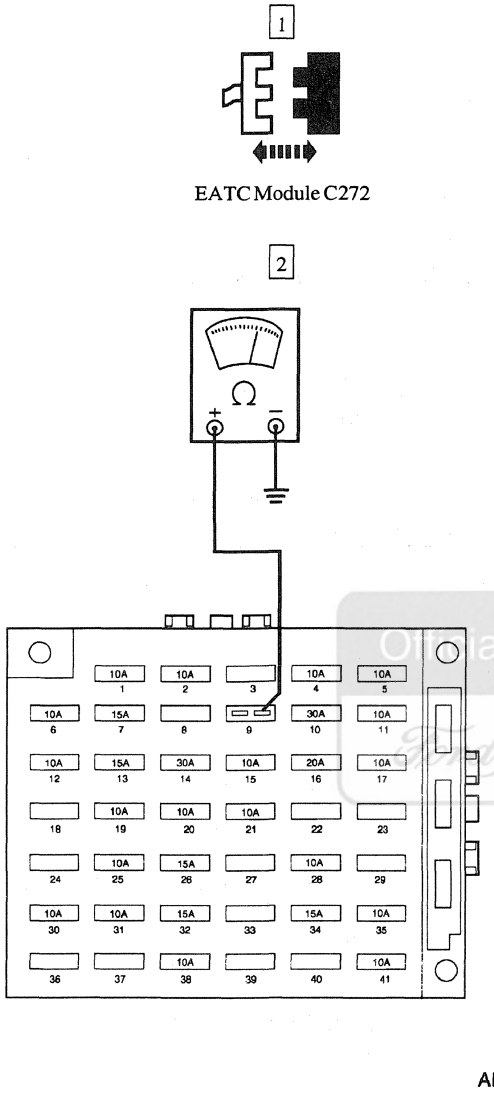	2 Measure the resistance between the fuse junction panel Fuse 9 socket at Circuit 364 (BK/LG) and ground. • Is the resistance greater than 10,000 ohms? → **Yes** GO to **G14.** → **No** REPAIR Circuit 364 (BK/LG) for a short to ground. TEST the system for normal operation.

Official Licensed Product Ford Motor Company

(Continued)

DIAGNOSIS AND TESTING (Continued)

PINPOINT TEST G: THE BLOWER MOTOR DOES NOT OPERATE (Continued)

TEST CONDITIONS	TEST DETAILS/RESULTS/ACTIONS
G14 CHECK THE BLOWER MOTOR RELAY FOR A SHORT	
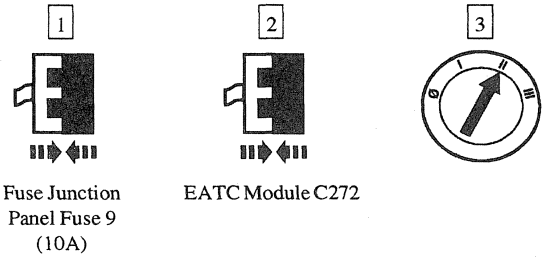 Fuse Junction Panel Fuse 9 (10A) EATC Module C272	• Does the fuse junction panel Fuse 9 (10A) open? → **Yes** REPLACE the EATC module. TEST the system for normal operation. → **No** REPLACE the blower motor relay. TEST the system for normal operation.
G15 BYPASS THE BLOWER MOTOR SPEED CONTROL	
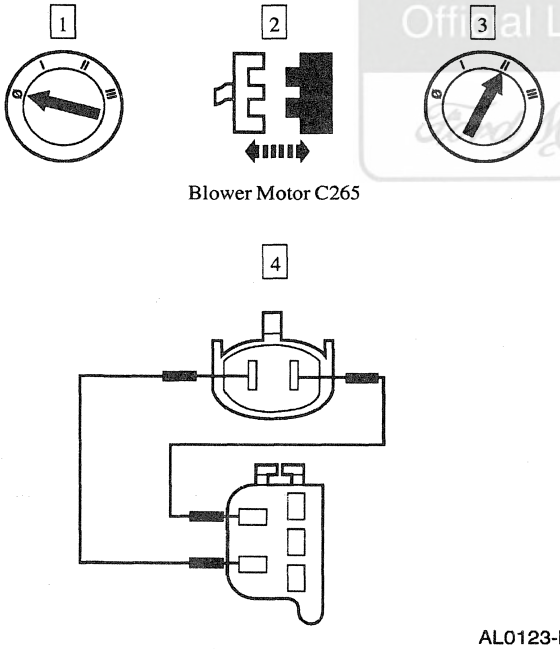 Blower Motor C265	4 Using 12-gauge jumper leads, connect the blower motor speed control connector Pin C210-1, Circuit 536 (BK/LG) and Pin C210-2, Circuit 57 (BK) to the blower motor connector C265. • Does the blower motor run at high speed? → **Yes** GO to **G19**. → **No** GO to **G16**.

Official Licensed Product Ford Motor Company

(Continued)

DIAGNOSIS AND TESTING (Continued)

PINPOINT TEST G: THE BLOWER MOTOR DOES NOT OPERATE (Continued)

TEST CONDITIONS	TEST DETAILS/RESULTS/ACTIONS
G16 CHECK THE BLOWER MOTOR SUPPLY CIRCUIT FOR AN OPEN	
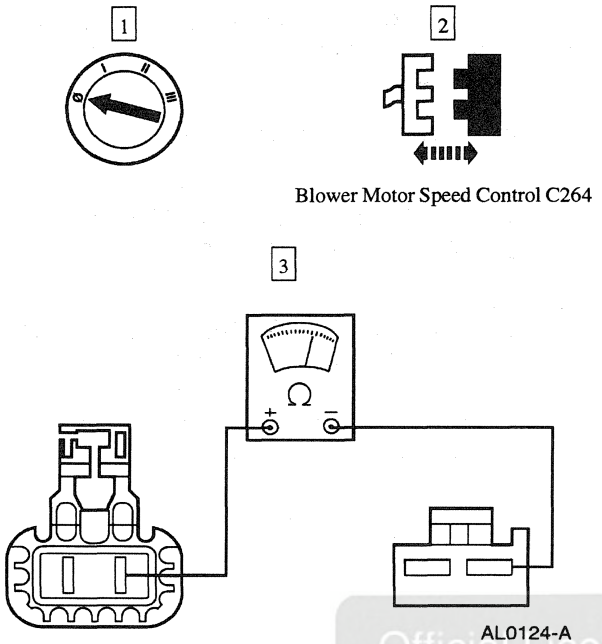	3 Measure the resistance between the blower motor speed control connector C264, Circuit 515 (O) and the blower motor connector C265. • Is the resistance less than 5 ohms? → **Yes** GO to **G17**. → **No** REPAIR Circuit 515 (O) for an open. TEST the system for normal operation.
G17 CHECK THE BLOWER MOTOR GROUND CIRCUIT FOR AN OPEN	
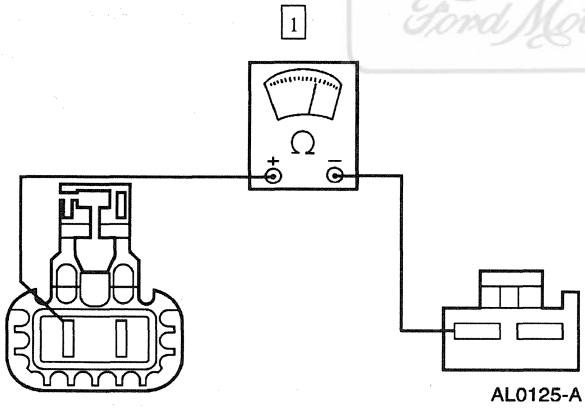	1 Measure the resistance between the blower motor speed control connector C264, Circuit 57 (BK) and the blower motor connector C265. • Is the resistance less than 5 ohms? → **Yes** GO to **G18**. → **No** REPAIR Circuit 57 (BK) for an open. TEST the system for normal operation.

Official Licensed Product
Ford Motor Company

(Continued)

DIAGNOSIS AND TESTING (Continued)

PINPOINT TEST G: THE BLOWER MOTOR DOES NOT OPERATE (Continued)

TEST CONDITIONS	TEST DETAILS/RESULTS/ACTIONS
G18 CHECK THE BLOWER MOTOR SPEED CONTROL GROUND CIRCUIT FOR AN OPEN	
1 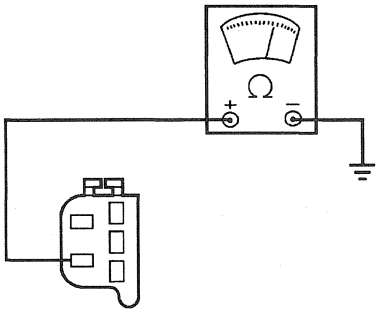 AL0126-A	1 Measure the resistance between the blower motor speed control connector Pin C210-2, Circuit 57 (BK) and ground. • Is the resistance less than 5 ohms? → **Yes** REPLACE the blower motor. TEST the system for normal operation. → **No** REPAIR Circuit 57 (BK) for an open. TEST the system for normal operation.
G19 CHECK THE EATC BLOWER SPEED SIGNAL	
1 2 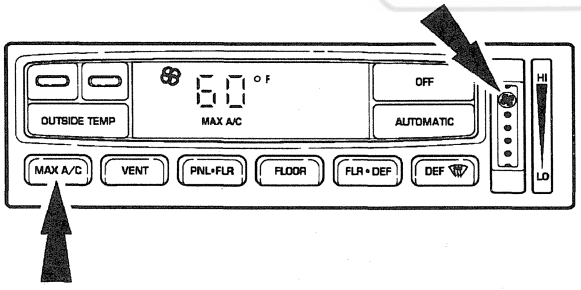 AL0137-A	2 Press the override button for MAX A/C operation and adjust the blower motor speed override control to maximum.

Official Licensed Product
Ford Motor Company

(Continued)

DIAGNOSIS AND TESTING (Continued)

PINPOINT TEST G: THE BLOWER MOTOR DOES NOT OPERATE (Continued)

TEST CONDITIONS	TEST DETAILS/RESULTS/ACTIONS
G19 CHECK THE EATC BLOWER SPEED SIGNAL (Continued)	
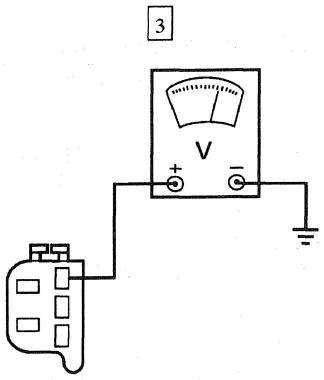 AL0127-A	3 Measure the voltage between the blower motor speed control connector Pin C210-3, Circuit 184 (T/O) and ground. • Is the voltage greater than 4 volts? → **Yes** REPLACE the A/C blower motor speed control. TEST the system for normal operation. → **No** GO to **G20**.
G20 CHECK CIRCUIT 184 (T/O) FOR AN OPEN	
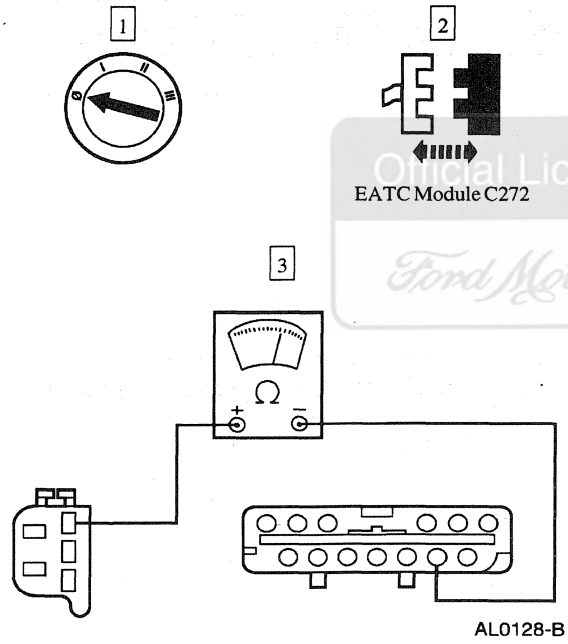 AL0128-B	3 Measure the resistance between the EATC module connector Pin C272-9, Circuit 184 (T/O) and the blower motor speed control connector Pin C210-3. • Is the resistance less than 5 ohms? → **Yes** GO to **G21**. → **No** REPAIR Circuit 184 (T/O) for an open. TEST the system for normal operation.

Official Licensed Product
Ford Motor Company

(Continued)

DIAGNOSIS AND TESTING (Continued)

PINPOINT TEST G: THE BLOWER MOTOR DOES NOT OPERATE (Continued)

TEST CONDITIONS	TEST DETAILS/RESULTS/ACTIONS
G21 CHECK CIRCUIT 184 (T/O) FOR A SHORT	
1 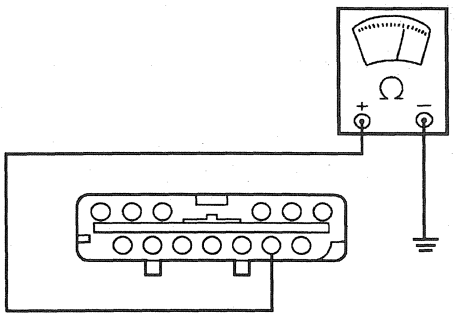 AL0129-B	1 Measure the resistance between the EATC connector Pin C272-9, Circuit 184 (T/O) and ground. • Is the resistance greater than 10,000 ohms? → **Yes** REPLACE the EATC module. TEST the system for normal operation. → **No** REPAIR Circuit 184 (T/O) for a short to ground. TEST the system for normal operation.

PINPOINT TEST H: THE BLOWER MOTOR OPERATES CONTINUOUSLY IN HIGH SPEED

TEST CONDITIONS	TEST DETAILS/RESULTS/ACTIONS
H1 CHECK BLOWER OPERATION	
1 2 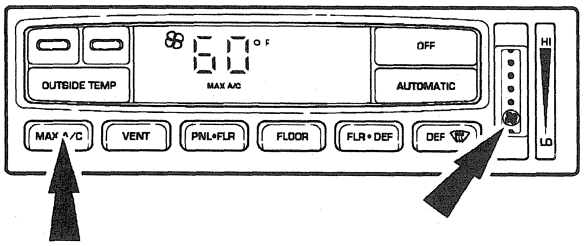 AL0139-A	2 Press the override button for MAX A/C operation and adjust the blower motor speed to minimum. • Does the blower speed reduce? → **Yes** The system is functioning normally. → **No** GO to **H2**.

Official Licensed Product
Ford Motor Company

(Continued)

DIAGNOSIS AND TESTING (Continued)

PINPOINT TEST H: THE BLOWER MOTOR OPERATES CONTINUOUSLY IN HIGH SPEED (Continued)

TEST CONDITIONS	TEST DETAILS/RESULTS/ACTIONS
H2 CHECK CIRCUIT 184 (T/O) FOR A SHORT TO POWER	
1 2 3 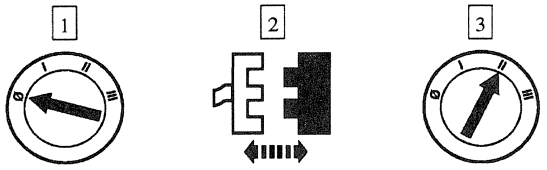 Blower Motor Speed Control C210	
4 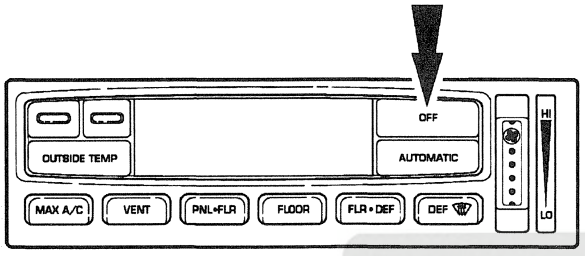 AM0694-A	4 Turn the EATC module off by pressing the OFF button.
5 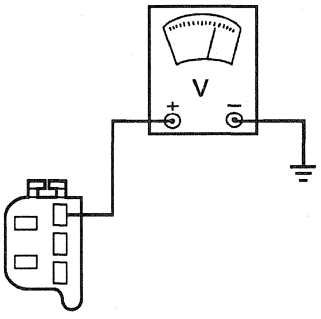 AL0127-A	5 Measure the voltage between the blower motor speed control connector Pin C210-3, Circuit 184 (T/O) and ground. • Is the voltage greater than 0 volt? → **Yes** REPAIR Circuit 184 (T/O) for a short to B+. TEST the system for normal operation. → **No** GO to **H3**.

Official Licensed Product
Ford Motor Company

(Continued)

DIAGNOSIS AND TESTING (Continued)

PINPOINT TEST H: THE BLOWER MOTOR OPERATES CONTINUOUSLY IN HIGH SPEED (Continued)

TEST CONDITIONS	TEST DETAILS/RESULTS/ACTIONS
H3 CHECK THE BLOWER MOTOR SPEED CONTROL	
1 2 3 Blower Motor Speed Control C210	
4 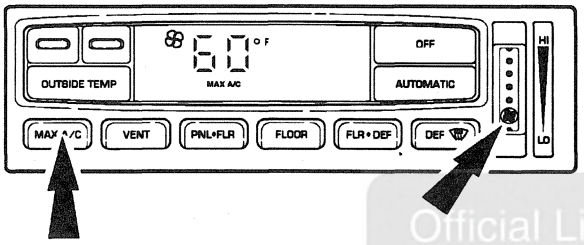 AL0139-A	4 Press the override button for MAX A/C operation and adjust the blower motor speed to minimum.
5 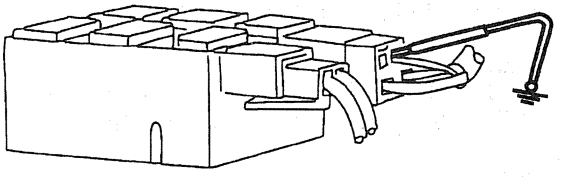 AL0145-B	5 Without disconnecting the blower motor speed control connector C210 from the blower motor speed control, use a jumper lead to connect Pin C210-3, Circuit 184 (T/O) to ground. • Does the blower motor operation stop or decrease substantially? → **Yes** GO to **H4**. → **No** REPLACE the A/C blower motor speed control. TEST the system for normal operation.

Official Licensed Product
Ford Motor Company

(Continued)

DIAGNOSIS AND TESTING (Continued)

PINPOINT TEST H: THE BLOWER MOTOR OPERATES CONTINUOUSLY IN HIGH SPEED (Continued)

TEST CONDITIONS	TEST DETAILS/RESULTS/ACTIONS
H4 CHECK CIRCUIT 184 (T/O) FOR AN OPEN	
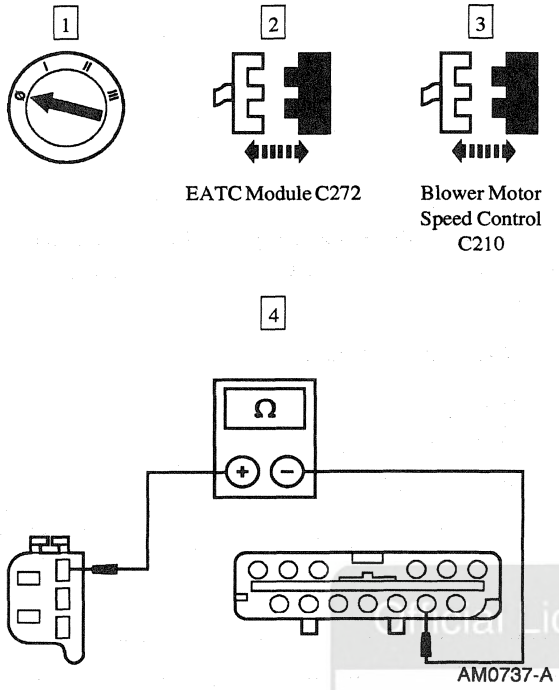	4 Measure the resistance between the EATC module connector Pin C272-9, Circuit 184 (T/O) and the blower motor speed control connector Pin C210-3. • Is the resistance less than 5 ohms? → **Yes** REPLACE the EATC module. TEST the system for normal operation. → **No** REPAIR Circuit 184 (T/O) for an open. TEST the system for normal operation.

PINPOINT TEST J: NO OPERATION IN SOME BLOWER SETTINGS

TEST CONDITIONS	TEST DETAILS/RESULTS/ACTIONS
J1 CHECK THE BLOWER OPERATION	
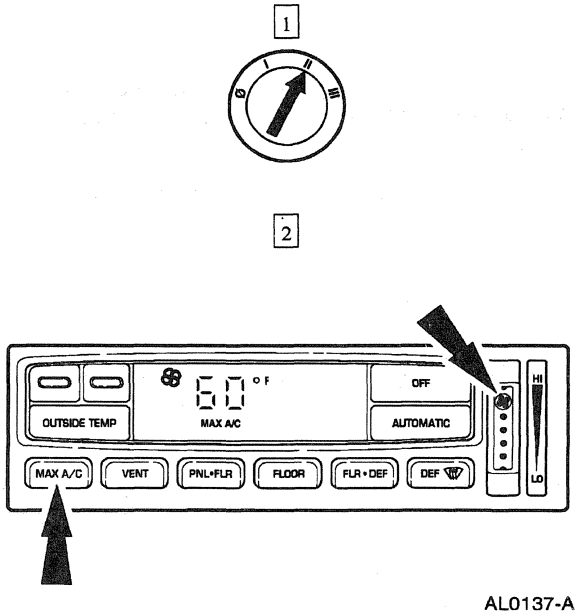	2 Press the override button for MAX A/C operation and rotate the blower motor speed override control to HI. • Does the blower speed increase as you rotate the blower motor speed override control toward HI? → **Yes** The system is functioning properly. → **No** GO to **J2**.

(Continued)

DIAGNOSIS AND TESTING (Continued)

PINPOINT TEST J: NO OPERATION IN SOME BLOWER SETTINGS (Continued)

TEST CONDITIONS	TEST DETAILS/RESULTS/ACTIONS
J2 CHECK THE BLOWER MOTOR SPEED CONTROL INPUT VOLTAGE	
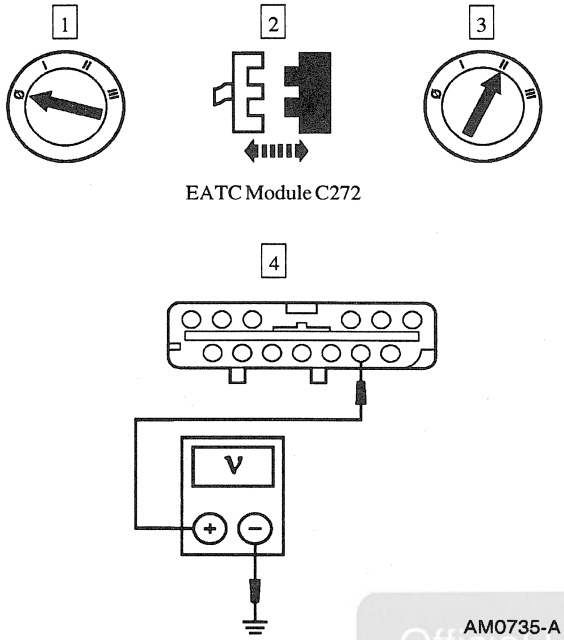	4 Measure the voltage between the EATC module connector Pin C272-9, Circuit 184 (T/O) and ground. • Is the voltage greater than 4.6 volts? → **Yes** GO to **J5**. → **No** GO to **J3**.
J3 CHECK CIRCUIT 184 (T/O) FOR A SHORT TO GROUND	
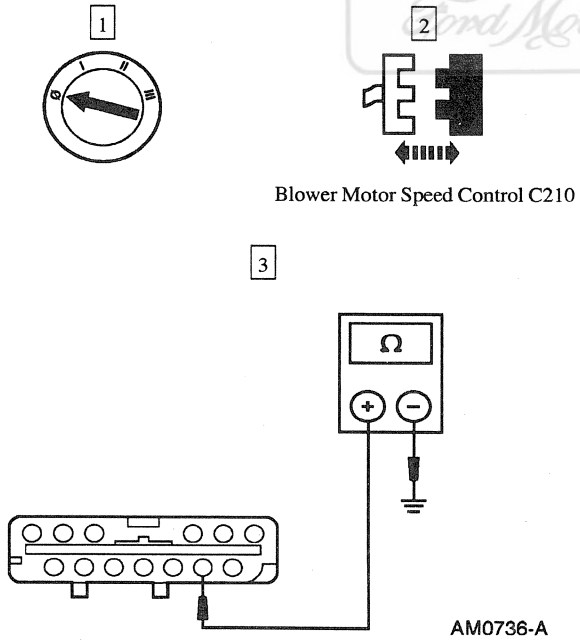	3 Measure the resistance between the EATC module connector Pin C272-9, Circuit 184 (T/O) and ground. • Is the resistance greater than 10,000 ohms? → **Yes** GO to **J4**. → **No** REPAIR Circuit 184 (T/O) for a short to ground. TEST the system for normal operation.

Official Licensed Product Ford Motor Company

(Continued)

DIAGNOSIS AND TESTING (Continued)

PINPOINT TEST J: NO OPERATION IN SOME BLOWER SETTINGS (Continued)

TEST CONDITIONS	TEST DETAILS/RESULTS/ACTIONS
J4 CHECK CIRCUIT 184 (T/O) FOR AN OPEN	
1 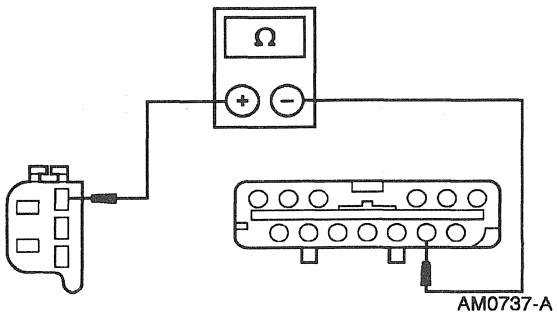 AM0737-A	1 Measure the resistance between the EATC module connector Pin C272-9, Circuit 184 (T/O) and the blower motor speed control connector Pin C210-3. • Is the resistance less than 5 ohms? → **Yes** REPLACE the A/C blower motor speed control. TEST the system for normal operation. → **No** REPAIR Circuit 184 (T/O) for an open. TEST the system for normal operation.
J5 CHECK FOR DISCONTINUITIES IN THE CONTROL SIGNAL	
1 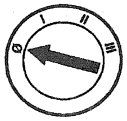 2 EATC Module C272 3 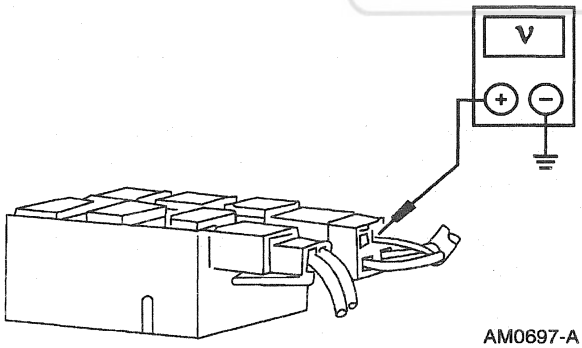 AM0697-A 4 	3 Without disconnecting the blower motor speed control connector C210 from the blower motor speed control, measure the voltage between the blower motor speed control Pin C210-3, Circuit 184 (T/O) and ground.

Original Licensed Product
Ford Motor Company

(Continued)

DIAGNOSIS AND TESTING (Continued)

PINPOINT TEST J: NO OPERATION IN SOME BLOWER SETTINGS (Continued)

TEST CONDITIONS	TEST DETAILS/RESULTS/ACTIONS
J5 CHECK FOR DISCONTINUITIES IN THE CONTROL SIGNAL (Continued)	
5 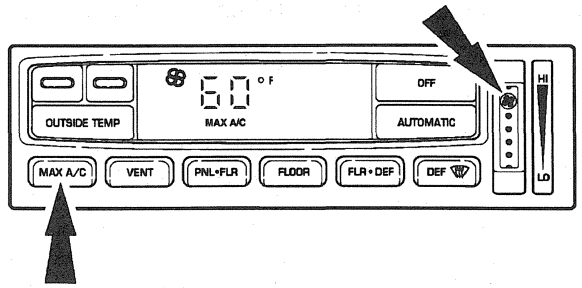 AL0137-A	5 Press the override button for MAX A/C operation and adjust the blower motor speed to maximum.
6 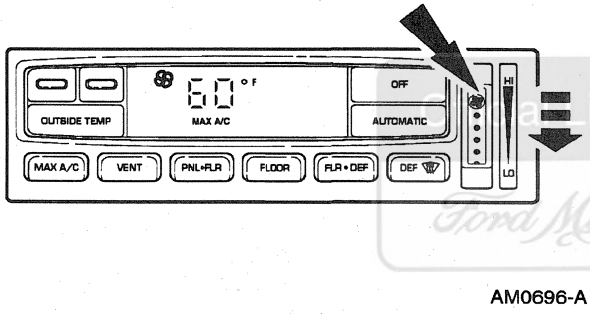 AM0696-A	6 Slowly adjust the blower motor speed to minimum while observing the voltmeter. Watch for discontinuities in the voltage as it decreases. The voltage should decrease in steps to a point less than 5 volts.
7 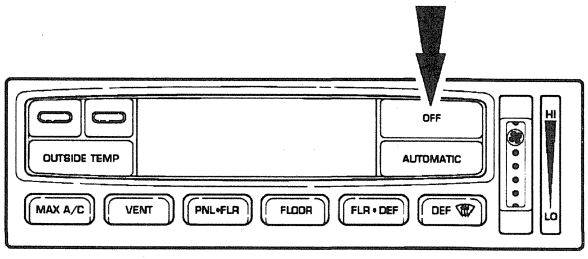 AM0694-A	7 Press the OFF button while observing the voltmeter. It should go to 0 volts and the blower motor should go off. • Did the voltage continually decrease without discontinuities? → **Yes** GO to **J6**. → **No** REPLACE the EATC module. TEST the system for normal operation.

Ford Licensed Product
Ford Motor Company

(Continued)

DIAGNOSIS AND TESTING (Continued)

PINPOINT TEST J: NO OPERATION IN SOME BLOWER SETTINGS (Continued)

TEST CONDITIONS	TEST DETAILS/RESULTS/ACTIONS
J6 INSPECT THE CONNECTIONS	
1 2 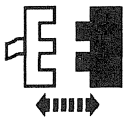 EATC Module C272 3 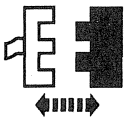 Blower Motor Speed Control C210	4 Inspect the blower motor speed control connector Pin C210-3, Circuit 184 (T/O) and the EATC connector Pin C272-9 for signs of damage, loose fits, or improper installation. • Are the connector pins undamaged and installed properly? → **Yes** REPLACE the EATC module. TEST the system for normal operation. → **No** REPAIR the damaged or loose connector pins. TEST the system for normal operation.

Official Licensed Product
Ford Motor Company

DIAGNOSIS AND TESTING (Continued)

PINPOINT TEST K: THE TEMPERATURE SET POINT DOES NOT REPEAT AFTER THE TURNING IGNITION SWITCH OFF

TEST CONDITIONS	TEST DETAILS/RESULTS/ACTIONS
K1 CHECK THE MEMORY BACKUP SUPPLY TO THE EATC MODULE	
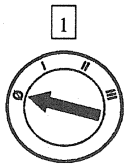 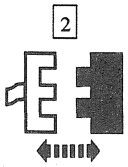 EATC Module C272 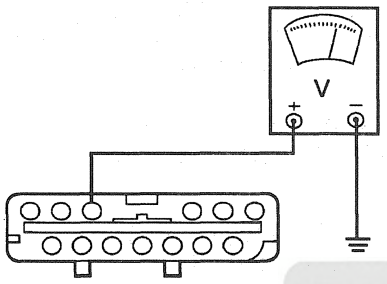 AL0074-B	3 Measure the voltage between the EATC module connector Pin C272-24, Circuit 973 (R) and ground. • Is the voltage greater than 10 volts? → **Yes** REPLACE the EATC module. TEST the system for normal operation. → **No** GO to **K2**.

(Continued)

Official Licensed Product
Ford Motor Company

DIAGNOSIS AND TESTING (Continued)

PINPOINT TEST K: THE TEMPERATURE SET POINT DOES NOT REPEAT AFTER THE TURNING IGNITION SWITCH OFF (Continued)

TEST CONDITIONS	TEST DETAILS/RESULTS/ACTIONS
K2 CHECK CIRCUIT 973 (R) FOR AN OPEN	
1 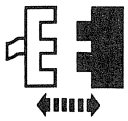 Junction Panel Fuse 20 (10A) 2 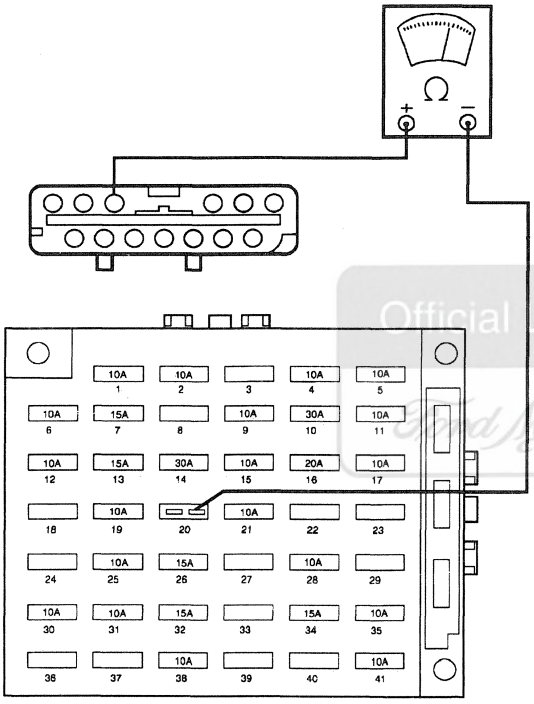 AL0144-B	2 Measure the resistance between the fuse junction panel Fuse 20 socket at Circuit 973 (R) and the EATC connector Pin C272-24. • Is the resistance less than 5 ohms? → **Yes** REPLACE the EATC module. TEST the system for normal operation. → **No** REPAIR Circuit 973 (R) for an open. TEST the system for normal operation.

Official Licensed Product Ford Motor Company

DIAGNOSIS AND TESTING (Continued)

PINPOINT TEST L: THE TEMPERATURE DISPLAY WILL NOT SWITCH BETWEEN CELSIUS AND FAHRENHEIT

TEST CONDITIONS	TEST DETAILS/RESULTS/ACTIONS
L1 CHECK THE EATC °C TO °F DISPLAY	
1 2 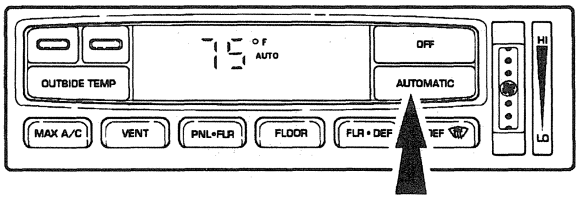 AL0055-A 3 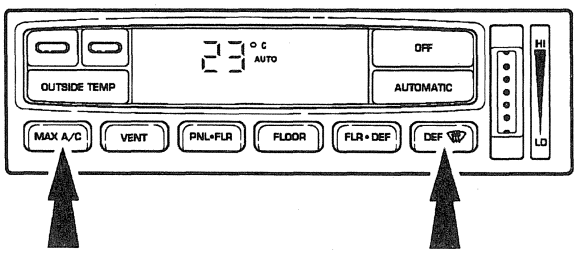 AL0142-A	2 Press the AUTOMATIC button. 3 Press the MAX A/C and DEFROST buttons simultaneously for at least 0.75 second. • Did the display change between °C and °F? → **Yes** GO to **L2**. → **No** REPLACE the EATC module. TEST the system for normal operation.

Official Licensed Product
Ford Motor Company®

(Continued)

DIAGNOSIS AND TESTING (Continued)

PINPOINT TEST L: THE TEMPERATURE DISPLAY WILL NOT SWITCH BETWEEN CELSIUS AND FAHRENHEIT (Continued)

TEST CONDITIONS	TEST DETAILS/RESULTS/ACTIONS
L2 CHECK THE ENGLISH/METRIC FUNCTION	
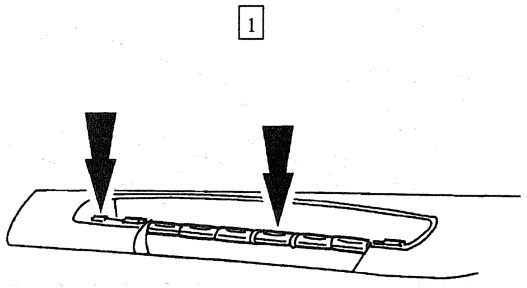 AL0134-A	1 Press the vehicle setting button on the message center to select MODE. Press the RESET button to change MODE. • Did the EATC module display change between °C and °F? → **Yes** The system is functioning properly. → **No** GO to the Module Communication Network Diagnostics in Section 418-00.

Component Tests

Heater Core

WARNING: CARBON MONOXIDE IS COLORLESS, ODORLESS AND DANGEROUS. IF IT IS NECESSARY TO OPERATE THE ENGINE WITH THE VEHICLE IN A CLOSED AREA SUCH AS A GARAGE, ALWAYS USE AN EXHAUST COLLECTOR TO VENT THE EXHAUST GASES OUTSIDE THE CLOSED AREA.

1. **NOTE:** Testing of returned heater cores reveals that a large percentage of heater cores are good and did not require replacement. If a heater core leak is suspected, the heater core must be tested by following the plugged heater core component test before the heater core pressure test. Perform a system inspection by checking the heater system thoroughly as follows:

   Inspect for evidence of coolant leakage at the heater water hose to heater core attachments. A coolant leak in the heater water hose could follow the heater core tube to the heater core and appear as a leak in the heater core.

2. **NOTE:** Spring-type clamps are installed as original equipment. Installation and overtightening of non-specification clamps can cause leakage at the heater water hose connection and damage the heater core.

   Check the integrity of the heater water hose clamps.

Heater Core — Plugged

WARNING: THE HEATER CORE INLET HOSE WILL BECOME TOO HOT TO HANDLE IF THE SYSTEM IS WORKING CORRECTLY.

1. Check to see that the engine coolant is at the proper level.
2. Start the engine and turn on the heater.
3. When the engine coolant reaches operating temperature, feel the heater core outlet hose to see if it is hot.

   If it is not hot:

   - the heater core may have an air pocket
   - the heater core may be plugged, or
   - the thermostat is not working properly.

Heater Core—Pressure Test

Use the Radiator/Heater Core Pressure Tester to perform the pressure test.

1. **NOTE:** Due to space limitations, a bench test may be necessary for pressure testing.

   Drain the coolant from the cooling system.

2. Disconnect the heater water hoses from the heater core; refer to Section 412-02.
3. Install a short piece of heater water hose, approximately 101 mm (4 inches) long on each heater core tube.

Licensed Product Motor Company

DIAGNOSIS AND TESTING (Continued)

4. Fill the heater core and heater water hoses with water and install Plug BT-7422-B and adapter BT-7422-A from the radiator/heater core pressure tester in the heater water hose ends. Secure the heater water hoses, plug and adapter with hose clamps.

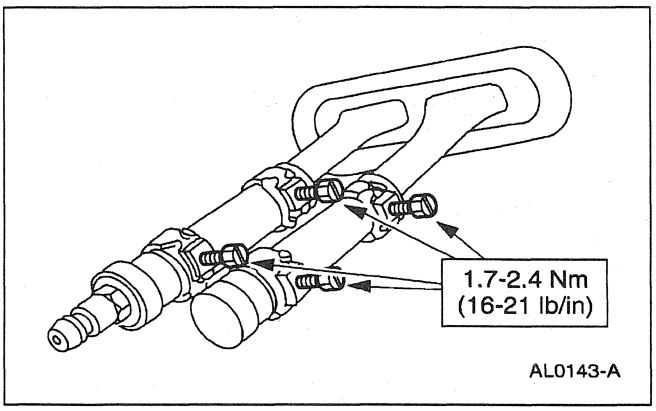

5. Attach the pump and gauge assembly from the Radiator/Heater Core Pressure Tester to the adapter.
6. Close the bleed valve at the base of the gauge. Pump 241 kPa (35 psi) of air pressure into the heater core.
7. Observe the pressure gauge for a minimum of three minutes.
8. If the pressure drops, check the heater water hose connections to the core tubes for leaks. If the heater water hoses do not leak, remove the heater core from the vehicle and perform the bench test.

Heater Core—Bench Test

1. Remove the heater core from the vehicle; refer to Section 412-02.
2. Drain all of the coolant from the heater core.
3. Connect the 101 mm (4 inch) test heater water hoses with plug and adapter to the core tubes. Then connect the Radiator/Heater Core Pressure Tester to the adapter.
4. Apply 241 kPa (35 psi) of air pressure to the heater core. Submerge the heater core in water.
5. If a leak is observed, replace the heater core.

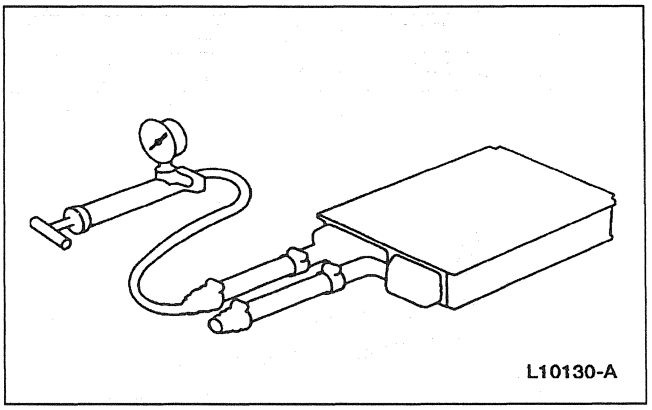

A/C Evaporator Condenser Core—On-Vehicle Leak Test

1. Discharge and recover the refrigerant; refer to Discharging and Recovery in this section.
2. **NOTE:** DO NOT leak test an A/C evaporator core with the suction accumulator/drier (19C836) attached to the core tubes.

   Disconnect the suspect A/C evaporator core or A/C condenser core from the A/C system; refer to Section 412-03.
3. Clean the spring lock couplings; refer to Spring Lock Coupling in this section.
4. Connect the appropriate test fittings from the R-12/R-134a Air Conditioning Test Fitting Set to the evaporator or condenser tube connections.
5. **NOTE:** The automatic shut-off valves on some gauge set hoses do not open when connected to the test fittings. If available, use hoses without shut-off valves. If hoses with shut-off valves are used, make sure the valve opens when attached to the test fittings or install an adapter which will activate the valve. The test is not valid if the shut-off valve does not open.

   Connect the red and blue hoses from the R-134a Manifold Gauge Set to the test fittings on the A/C evaporator core or A/C condenser core. Connect the yellow hose to a known good vacuum pump.

Ford Licensed Copy
Ford Motor Company

DIAGNOSIS AND TESTING (Continued)

6. Open both gauge set valves and start the vacuum pump. Allow the vacuum pump to operate for a minimum of 45 minutes after the gauge set low pressure gauge indicates 101 kPa (30 in-Hg). The 45 minute evacuation is necessary to remove any refrigerant from oil left in the A/C evaporator core or A/C condenser core. If the refrigerant is not completely removed from the oil, outgassing will degrade the vacuum and appear as a refrigerant leak.
7. If the low pressure gauge reading will not drop to 101 kPa (30 in-Hg) when the valves on the gauge and manifold set are open and the vacuum pump is operating, close the gauge set valves and observe the low pressure gauge. If the pressure rises rapidly to zero, a large leak is indicated. Recheck the test fitting connections and gauge set connections before replacing the A/C evaporator core or A/C condenser core.
8. After evacuating for 45 minutes, close the gauge set valves and stop the vacuum pump. Observe the low pressure gauge; it should remain at the 101 kPa (30 in-Hg) mark.
   - If the low pressure gauge reading rises 34 or more kPa (10 or more in-Hg) of vacuum from the 101 kPa (30 in-Hg) position in 10 minutes, a leak is indicated.
   - If a very small leak is suspected, wait 30 minutes and observe the vacuum gauge.
   - If a small amount of vacuum is lost, operate the vacuum pump with gauge valves open for an additional 30 minutes to remove any remaining refrigerant from the oil in the A/C evaporator core or A/C condenser core. Then recheck for loss of vacuum.
   - If a very small leak is suspected, allow the system to set overnight with vacuum applied and check for vacuum loss.
9. If the A/C evaporator core or A/C condenser core does leak, as verified by the above procedure, install a new A/C evaporator core or A/C condenser core; refer to Section 412-03.

A/C Compressor—External Leak Test

1. Install the A/C Pressure Test Adapter on the rear head of the A/C compressor using the existing manifold retaining bolt.
2. Connect the high and low pressure lines of a manifold gauge set or a refrigerant recovery/recycling station such as the R-134a A/C Service Center to the corresponding fittings on the A/C pressure test adapter.
3. Attach the center hose of the manifold gauge set to a refrigerant container standing in an upright position.
4. Hand-rotate the compressor shaft 10 complete revolutions to distribute the oil inside the A/C compressor.
5. Open the low pressure gauge valve, the high pressure gauge valve and the valve on the refrigerant container to allow the refrigerant vapor to flow into the A/C compressor.
6. Using the Automatic Calibration Halogen Leak Detector, check for leaks at the compressor shaft seal and the compressor center seal.
7. If a shaft seal leak is found, install a new shaft seal; refer to Section 412-03. If an external leak is found at the center joint of the A/C compressor , install a new A/C compressor.
8. When the leak test is complete, recover the refrigerant from the compressor.

Official Licensed Product

A/C Compressor—Rotating Torque Check

Check the rotational torque of a used A/C compressor if excessive drag is suspected.

1. Recover the refrigerant; refer to Discharging and Recovery in this section. Observe all safety precautions.
2. ⚠ **CAUTION: Use care not to allow dirt to enter the A/C compressor. Contamination can result in component failure and damage to the A/C system.**

   Remove the A/C manifold and tube (19D734) from the A/C compressor.
3. With the A/C clutch disengaged, rotate the compressor shaft and note the torque required to rotate the shaft one complete revolution. Do not measure the starting torque.
4. If the rotational torque exceeds 10 Nm (7 lb-ft), replace the A/C compressor.

DIAGNOSIS AND TESTING (Continued)

5. If the rotational torque is less than specified, excessive drag does not exist in the A/C compressor. Install the A/C manifold and tube and leak test, evacuate and charge the system; refer to Evacuation and Charging in this section.
6. Check the system for normal operation.

GENERAL PROCEDURES

Spring Lock Coupling

Special Tool(s)

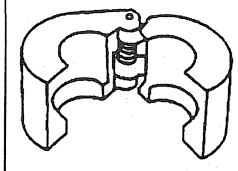 ST1221-A	Spring Lock Coupling Disconnect Tool (3/8 inch) 412-026 (T81P-19623-G1)
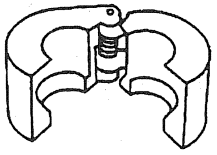 ST1222-A	Spring Lock Coupling Disconnect Tool (1/2 inch) 412-027 (T81P-19623-G2)

(Continued)

Special Tool(s)

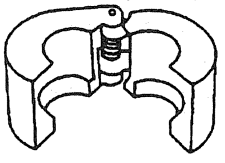 ST1225-A	Spring Lock Coupling Disconnect Tool (5/8 inch) 412-038 (T83P-19623-C)
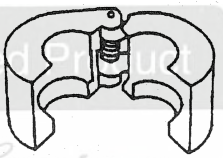 ST1227-A	Spring Lock Coupling Disconnect Tool (3/4 inch) T85P-19623-A

Official Licensed Product Ford Motor Company

Disconnect

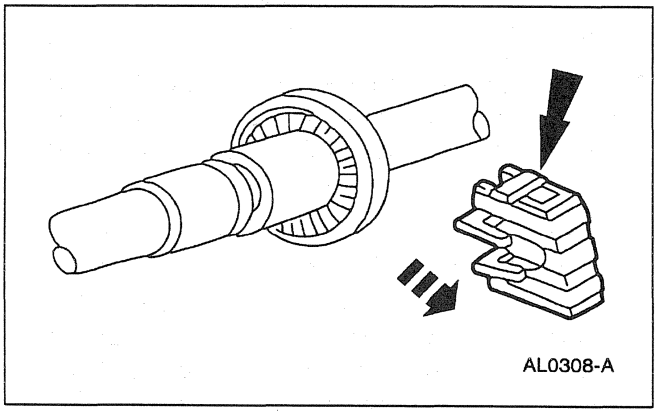

1. Disconnect the A/C tube lock coupling clip (19E746).

GENERAL PROCEDURES (Continued)

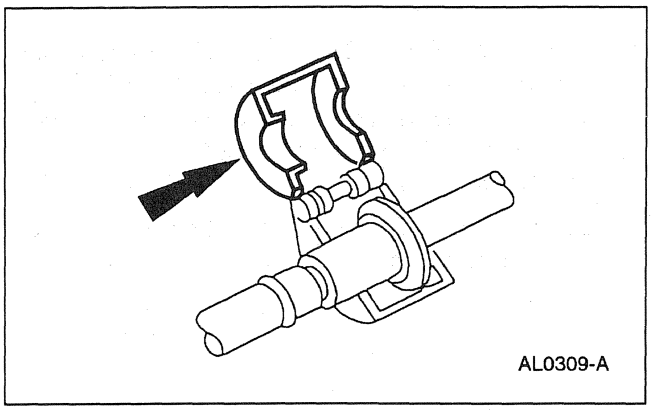

2. Fit the spring lock coupling disconnect tool to the spring lock coupling.

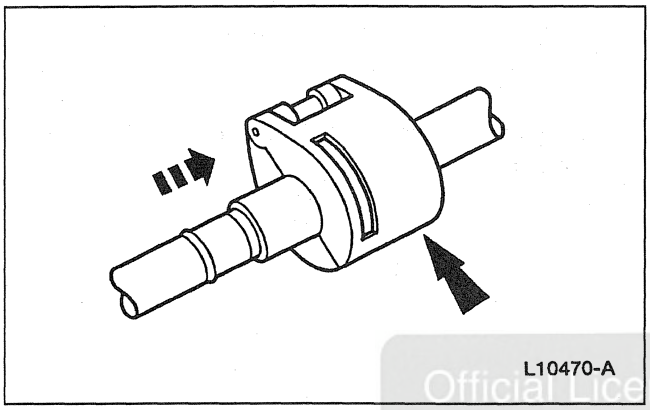

3. Push the tool into the cage opening to release the female fitting from the A/C tube lock coupling spring (19E576).

Official Licensed Product
Ford Motor Company

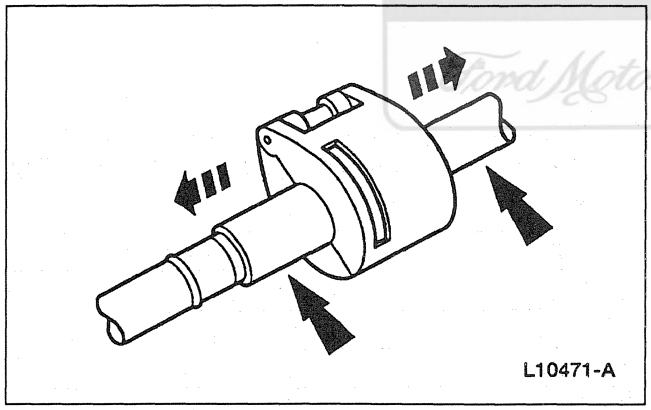

4. Pull the spring lock coupling fittings apart.

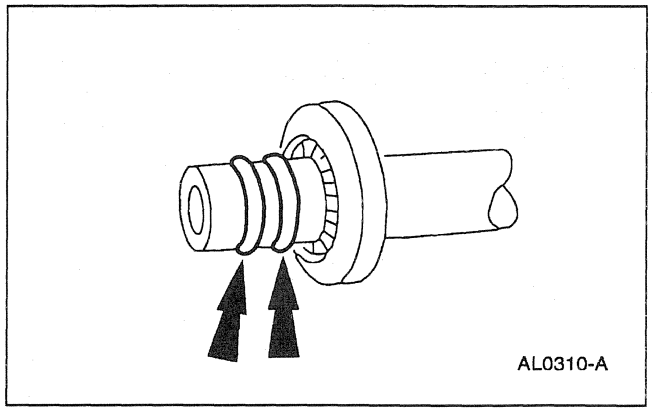

5. ⚠ **CAUTION: Do not use metal tools to remove the O-ring seals. They can cause axial scratches across the O-ring grooves resulting in refrigerant leaks.**

   Remove the O-ring seals with a non-metallic tool.

GENERAL PROCEDURES (Continued)

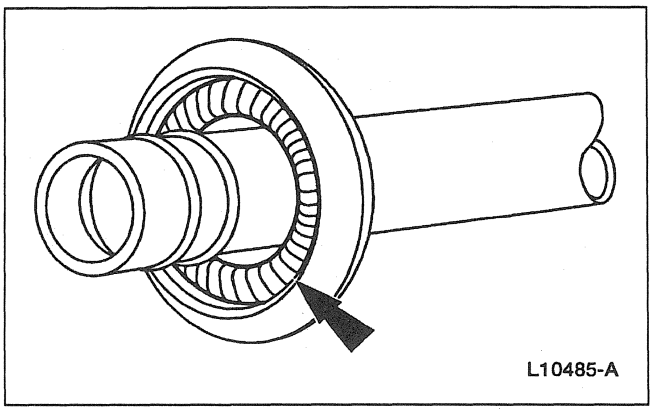

6. ⚠ **CAUTION: Do not use a screwdriver or similar tool to remove the A/C tube lock coupling spring; this can cause axial scratches across the O-ring grooves resulting in refrigerant leaks.**

   Remove the A/C tube lock coupling spring with a small hooked wire.

Cleaning

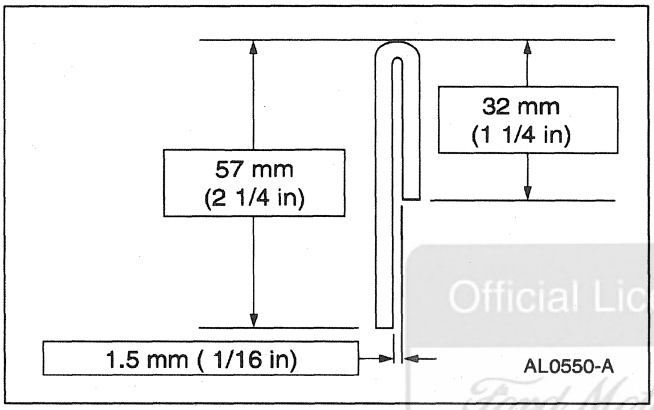

Official Licensed Product
Ford Motor Company

1. Fabricate a cleaning tool from a 1/8 inch diameter brazing rod.

2. Cut an abrasive pad from maroon colored 3M Scotch Brite® with the dimensions corresponding to the coupling size.

Coupling Size	Pad Size
3/8 inch	25 x 50 mm (1 x 2 inch)
1/2 inch	25 x 50 mm (1 x 2 inch)
5/8 inch	25 x 76 mm (1 x 3 inch)
3/4 inch	25 x 102 mm (1 x 4 inch)

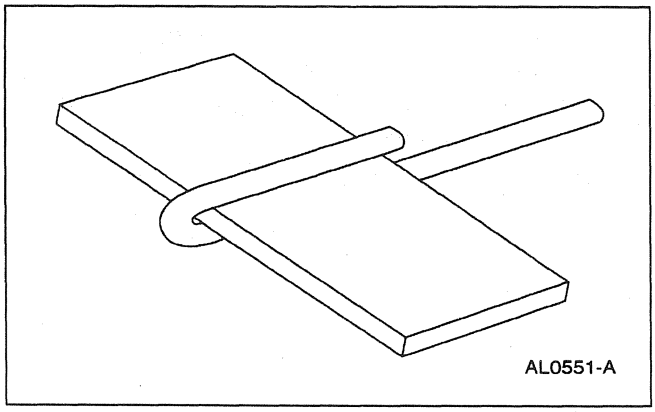

3. Assemble the pad to the tool.

GENERAL PROCEDURES (Continued)

4. Coat the abrasive pad with Motorcraft YN-12c refrigerant oil or equivalent meeting Ford specification WSH-M1C231-B.

5. Roll the pad on the tool and install it in a variable speed drill motor.

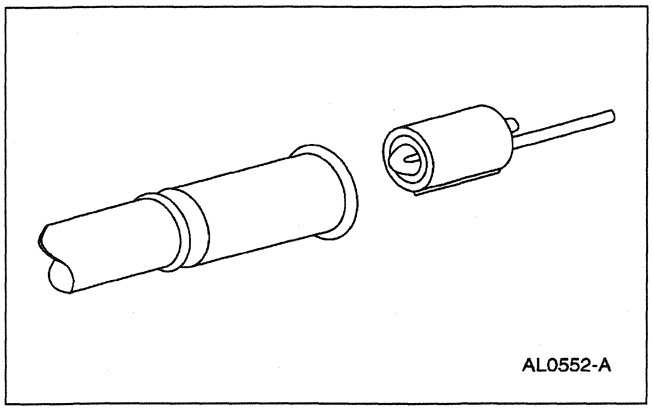
AL0552-A

6. ⚠ **CAUTION: Maintain low speed drill rotation when inserting or removing the cleaning tool to prevent axial scratches which may cause future leaks.**

   Polish for 1 minute at moderate speed (less than 1500 rpm) or until the surface is clean and free of scratches or debris.

7. Clean the fitting with a lint-free cloth.

8. Inspect the surface for grooves or scratches. If grooves and scratches are still present, replace the component.

Official Licensed Product
Ford Motor Company

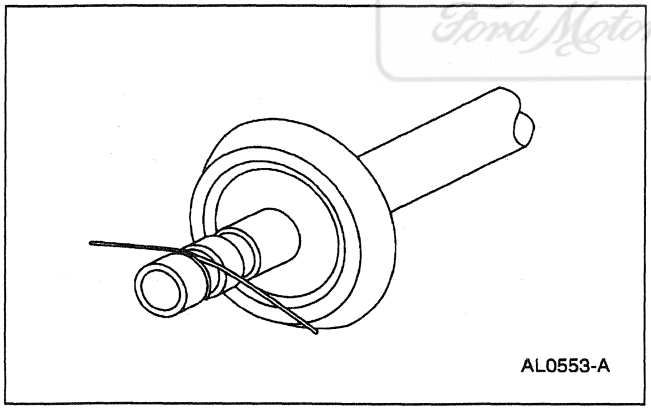
AL0553-A

9. Clean the O-ring grooves with a 300 mm (12 in) length of natural fiber string.
   - Loop the string around the grooves and pull the string back and forth.

10. Remove any debris from the grooves with a lint-free cloth.

GENERAL PROCEDURES (Continued)

Connect

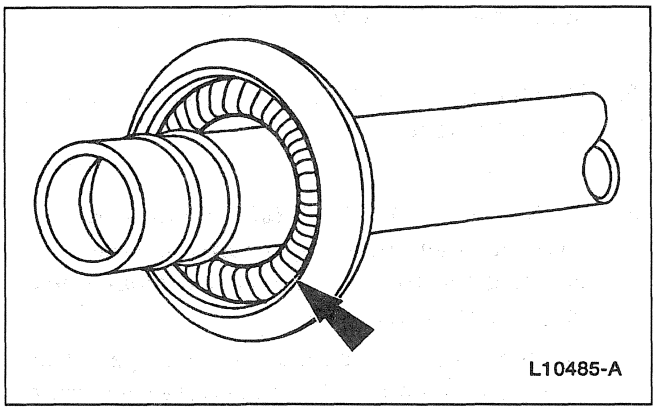

1. Install the A/C tube lock coupling spring.

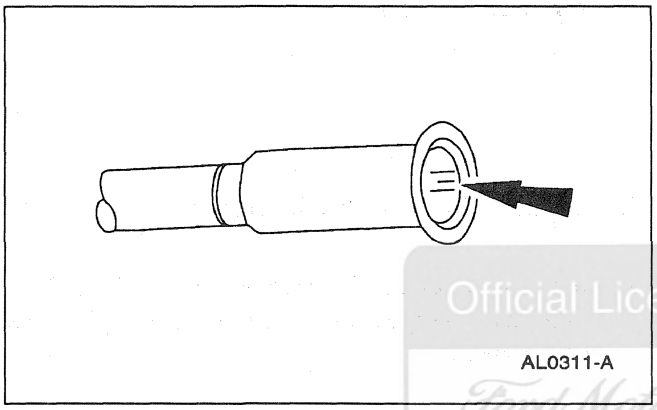

2. Lubricate the inside of the coupling with Motorcraft YN-12c refrigerant oil or equivalent meeting Ford specification WSH-M1C231-B.

Official Licensed Product
Ford Motor Company

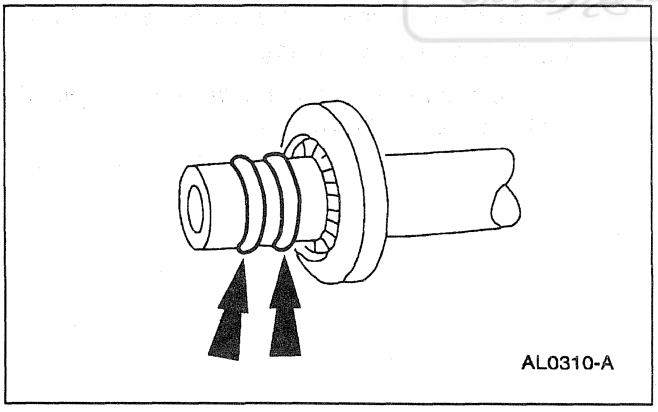

3. ⚠ **CAUTION: Use only new green O-rings. The use of any O-ring seals other than specified may result in intermittent leakage during vehicle operation.**

   Install the O-ring seals.

   - Lubricate the O-ring seals with Motorcraft YN-12c refrigerant oil or equivalent meeting Ford specification WSH-M1C231-B.

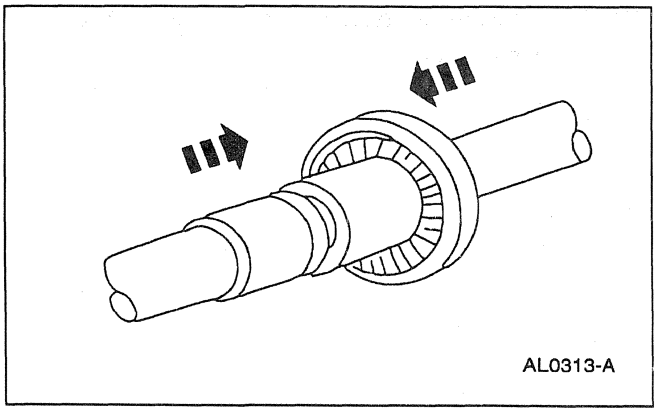

4. Connect the spring lock coupling fittings with a twisting motion until the A/C tube lock coupling spring snaps over the flared end of the female fitting.

GENERAL PROCEDURES (Continued)

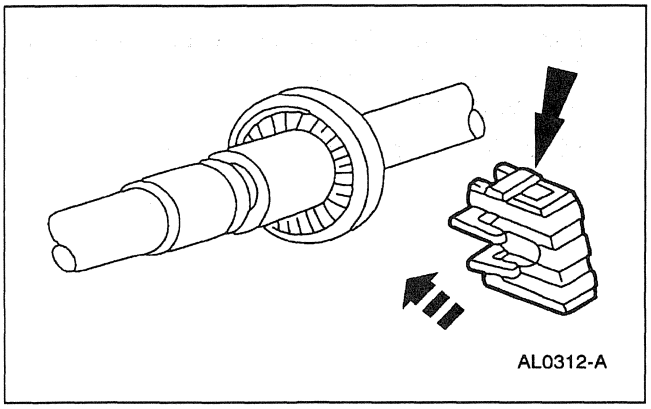

5. Install the A/C tube lock coupling clip.

Refrigerant System Tests

Special Tool(s)

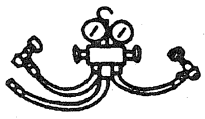 ST1460-A	R-134a Manifold Gauge Set 176-R032A or equivalent

Official Licensed Product
Ford Motor Company

1. Connect the R-134a Manifold Gauge Set; refer to Manifold Gauge Set Connection in this section.
2. Adjust the climate controls for maximum cooling.
   - Start the engine.
   - Select MAX A/C operation.
   - Set the blower motor speed to maximum.
3. Stabilize the in-vehicle temperature at 21°C-27°C (70°F-80°F).

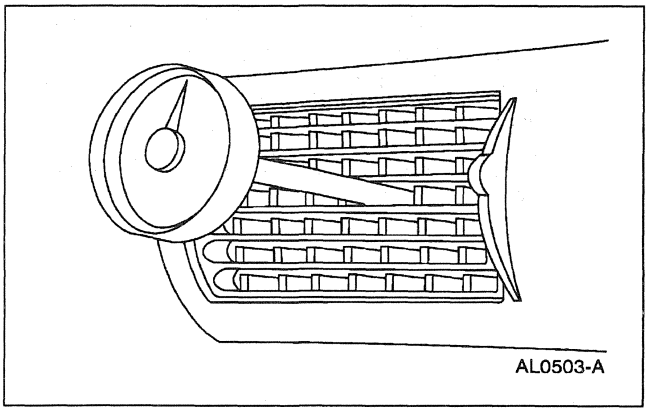

GENERAL PROCEDURES (Continued)

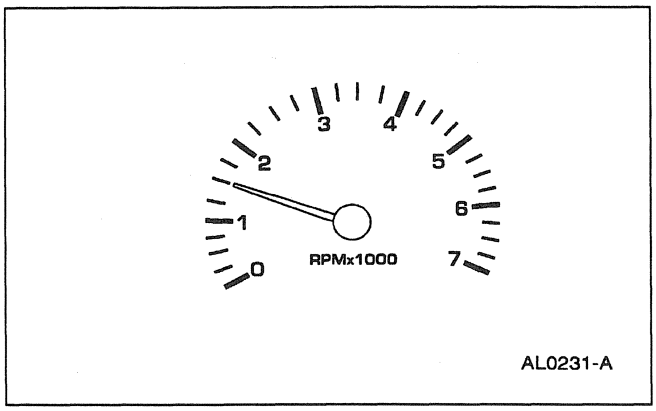

4. **NOTE:** When the ambient temperatures exceed 38°C (100°F), do not run the engine above normal idle speed only.

   Maintain the engine speed at 1500 rpm.

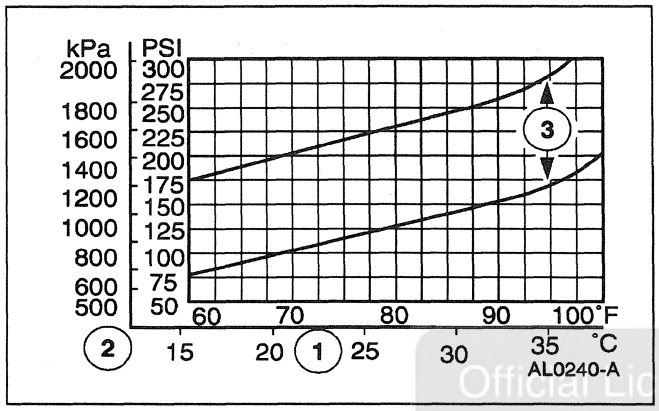

5. Determine the compressor discharge (high) pressure.
   1 Record the ambient temperature.
   2 Record the discharge (high) pressure.
   3 **NOTE:** In ambient temperatures between 38°C-43°C (100°F-110°F), the system performance pressures will be the same as those for ambient temperatures shown on the chart in the 32°C-38°C (90°F-100°F) range.

   The system performance is acceptable when the pressure reading falls between the upper and lower limits shown.

Official Licensed Product
Ford Motor Company

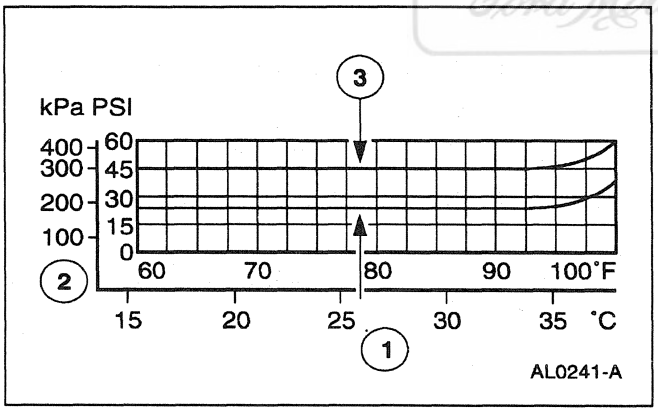

6. Determine the compressor suction (low) pressure.
   1 Record the ambient temperature.
   2 Record the suction (low) pressure.
   3 **NOTE:** In ambient temperatures between 38°C-43°C (100°F-110°F), the system performance pressures will be the same as those for ambient temperatures shown on the chart in the 32°C-38°C (90°F-100°F) range.

   The system performance is acceptable when the pressure reading falls between the upper and lower limits shown.

GENERAL PROCEDURES (Continued)

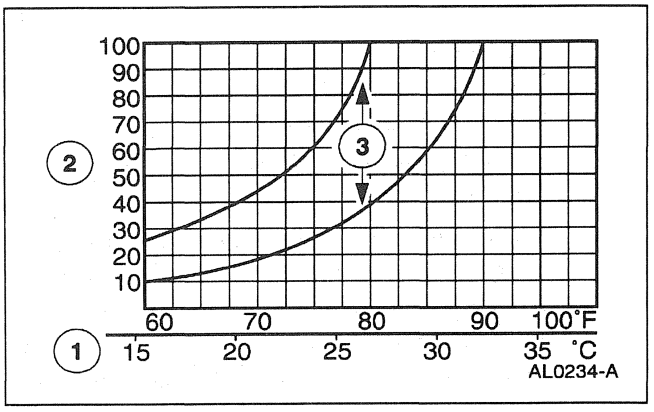

7. Determine the A/C clutch ON time.
   1 Record the ambient temperature.
   2 Record the A/C clutch ON time in seconds.
   3 **NOTE:** When the ambient temperature is above 26°C (80°F), the A/C clutch may not cycle.

   The system performance is acceptable when the recorded time falls between the upper and lower limits shown.

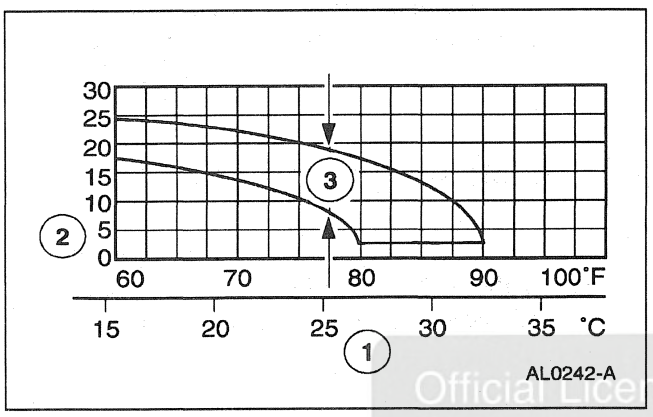

8. Determine the A/C clutch OFF time.
   1 Record the ambient temperature.
   2 Record the A/C clutch OFF time in seconds.
   3 **NOTE:** When the ambient temperature is above 26°C (80°F), the A/C clutch may not cycle.

   The system performance is acceptable when the recorded time falls between the upper and lower limits shown.

Official Licensed Product
Ford Motor Company

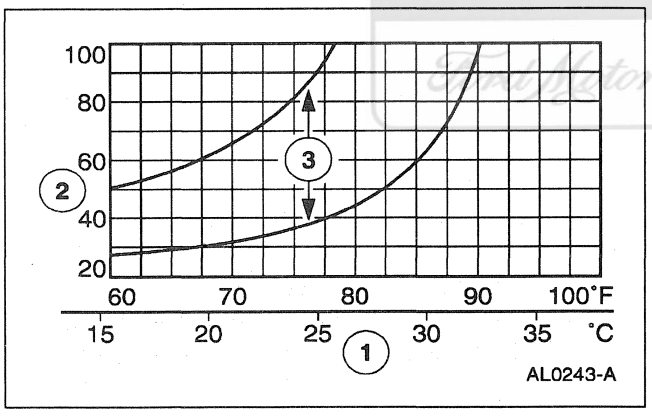

9. Determine the total A/C clutch cycle time.
   1 Record the ambient temperature.
   2 Record the time the A/C clutch is engaged plus the time it is disengaged (time ON plus time OFF).
   3 **NOTE:** When the ambient temperature is above 26°C (80°F), the A/C clutch may not cycle.

   The system performance is acceptable when the recorded time falls between the upper and lower limits shown.

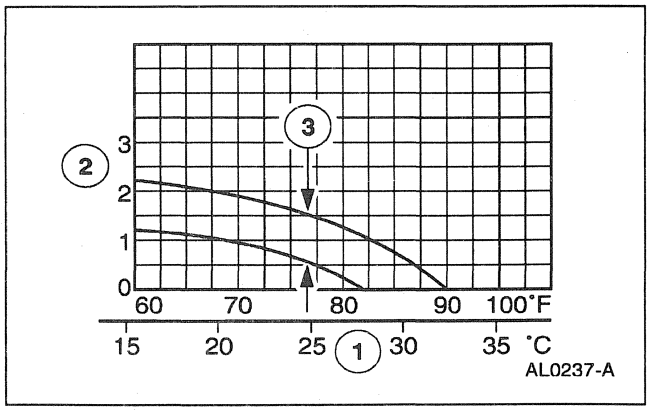

10. Determine the A/C clutch cycle rate per minute.
    1 Record the ambient temperature.
    2 Record the number of A/C clutch cycles occurring in one minute.
    3 **NOTE:** When the ambient temperature is above 26°C (80°F), the A/C clutch may not cycle.

    The system performance is acceptable when the recorded number of cycles falls between the upper and lower limits shown.

GENERAL PROCEDURES (Continued)

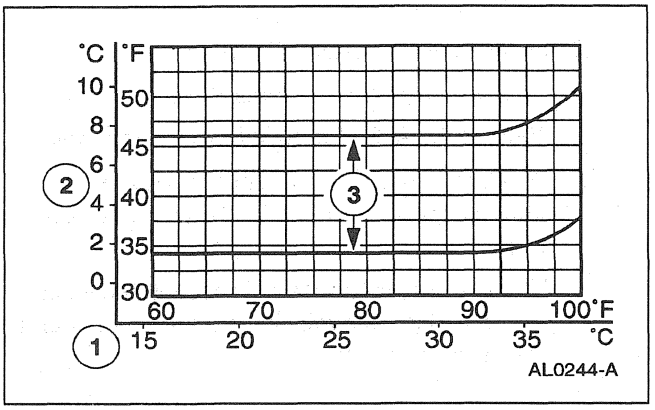

11. Determine the center A/C register discharge temperature.
    1 Record the ambient temperature.
    2 Record the center A/C register discharge temperature.
    3 **NOTE:** In ambient temperatures between 38°C-43°C (100°F-110°F), the A/C register discharge temperatures will be the same as those for ambient temperatures shown on the chart in the 32°C-38°C (90°F-100°F) range.

    The system performance is acceptable when the center A/C register discharge temperature falls between the upper and lower limits shown.

A/C Clutch Air Gap Adjustment

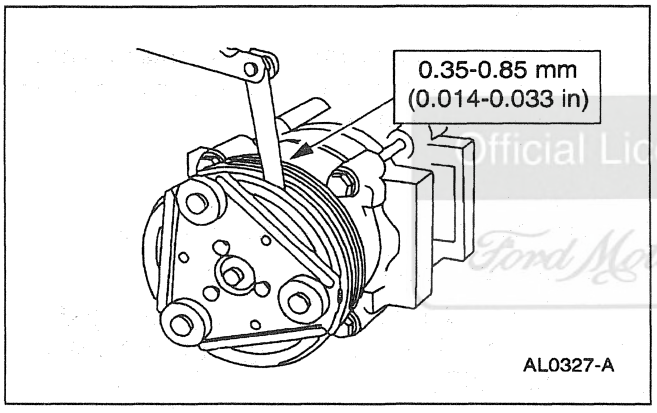

Official Licensed Product
Ford Motor Company

1. Check the A/C clutch air gap at three equally spaced places between the clutch hub and the A/C clutch pulley.

2. Remove the A/C clutch. Add or remove spacers between the A/C clutch and the compressor shaft until clearance is within specifications; refer to Section 412-03.

GENERAL PROCEDURES (Continued)

Manifold Gauge Set Connection

Special Tool(s)

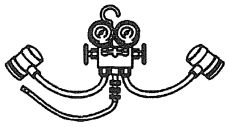 ST1928-A	R-134a Manifold Gauge Set 176-R032A or equivalent
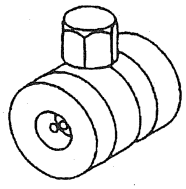 ST1247-A	R-134a Low Side Quick Disconnect 176-R0036 or equivalent
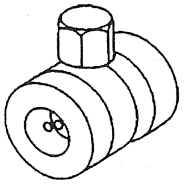 ST1248-A	R-134a High Side Quick Disconnect 176-R0037 or equivalent

Official Licensed Product
Ford Motor Company

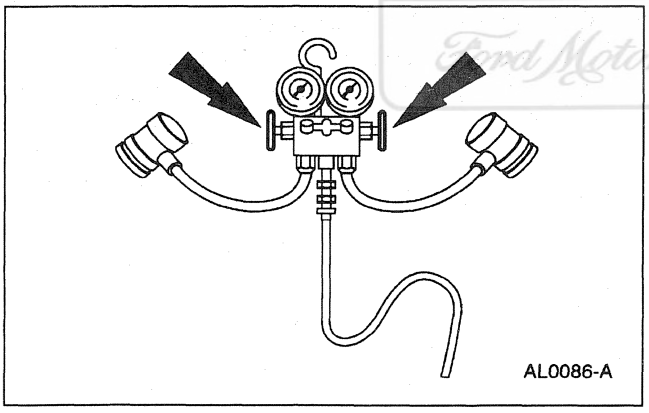

1. Turn both valves on the R-134a manifold gauge set counterclockwise to close the low- and high-pressure hoses to the center manifold and center hose.

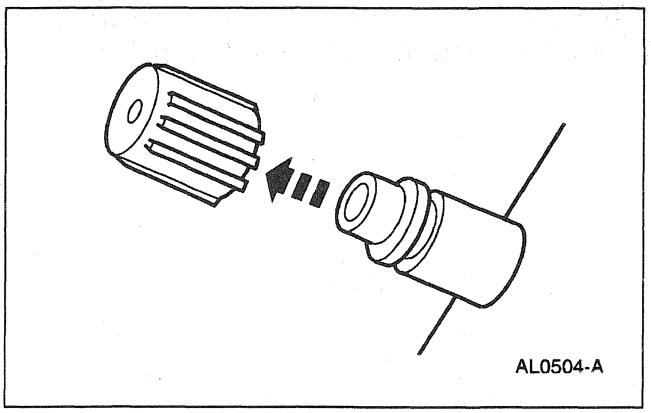

2. Remove the A/C charging valve cap (19D702) from the low-pressure service gauge port valve.

GENERAL PROCEDURES (Continued)

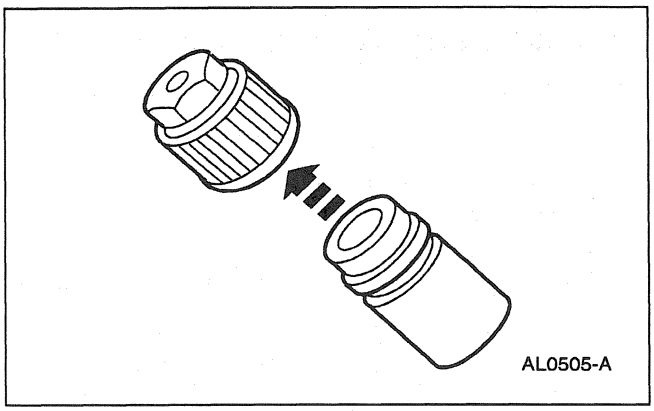

3. Remove the A/C charging valve cap from the high-pressure service gauge port valve.

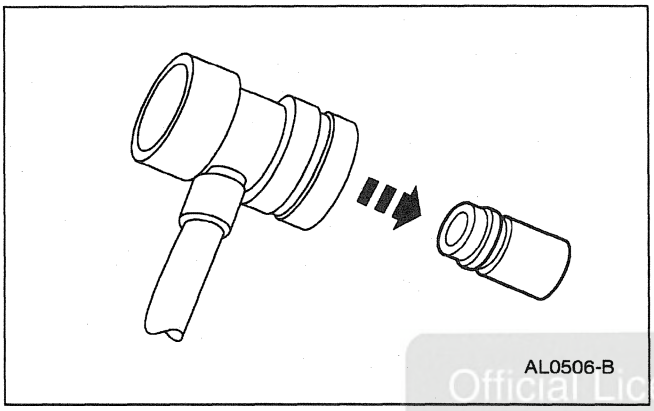

4. Connect the R-134a manifold gauge set low-pressure hose and the R-134a low side quick disconnect to the low-pressure service gauge port valve.

Official Licensed Product
Ford Motor Company

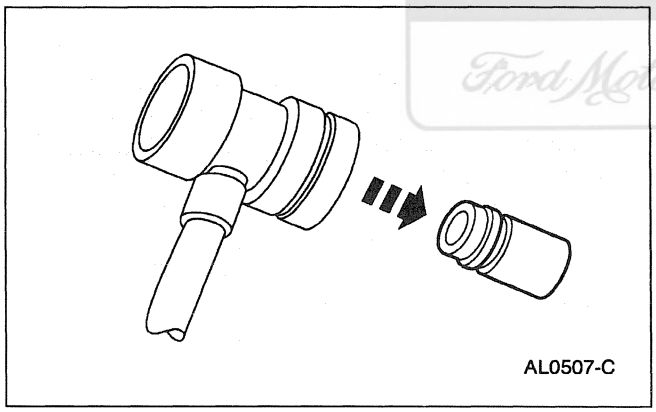

5. Connect the R-134a manifold gauge set high-pressure hose and the R-134a high side quick disconnect to the high-pressure service gauge port valve.

Leak Detection — Using the Automatic Calibration Halogen Leak Detector

Special Tool(s)

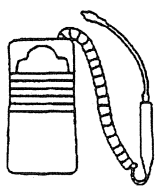	Automatic Calibration Halogen Leak Detector 023-R1003 or equivalent

GENERAL PROCEDURES (Continued)

⚠ **CAUTION: Good ventilation is necessary in the area where electronic A/C leak testing is to be performed. If the surrounding air is contaminated with refrigerant gas, the leak detector will indicate this gas all the time. Odors from other chemicals such as anti-freeze, diesel fuel, disc brake cleaner, or other cleaning solvents can cause the same problem. A fan, even in a well-ventilated area, is very helpful in removing small traces of contamination from the air that might affect the leak detector.**

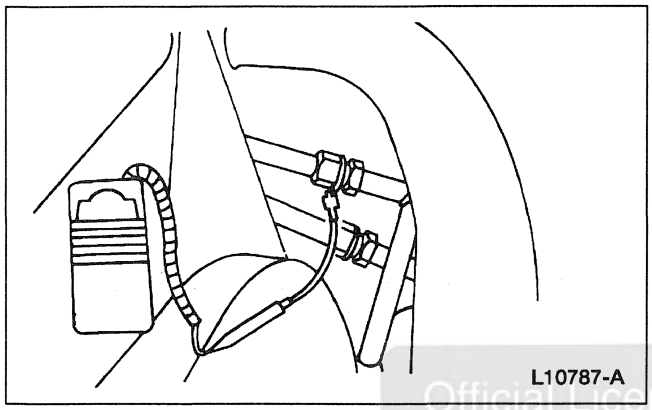
L10787-A

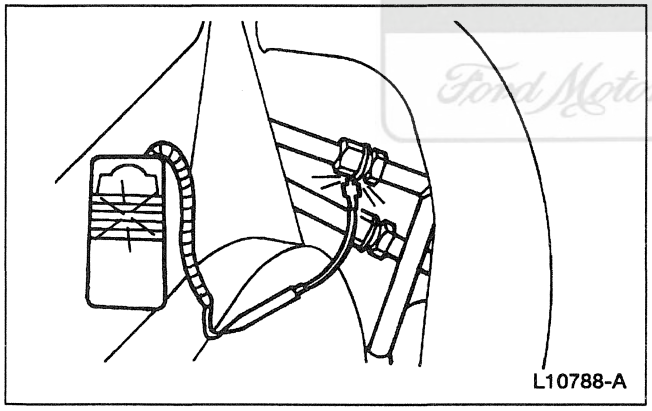
L10788-A

1. **NOTE:** System pressure should be between 413-551 kPa (60-80 psi) at 24°C (75°F) with the engine off.

   Leak test the refrigerant system using the Automatic Calibration Halogen Leak Detector. Follow the instructions included with the leak detector for handling and operation techniques.

2. If a leak if found, discharge and recover the refrigerant; refer to Discharging and Recovery in this section.
   - Repair the system.
   - Test the system for normal operation.

Official Licensed Product
Ford Motor Company

Leak Detection — Using Tracer Dye

Special Tool(s)

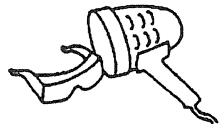 ST1261-A	120 Watt UV Spot Lamp 164-R0721 or equivalent

GENERAL PROCEDURES (Continued)

NOTE: Ford Motor Company vehicles are produced with a permanent leak tracer dye incorporated into the A/C system. The location of leaks can be pinpointed by the bright yellow-green glow of the tracer dye. Since more than one leak can exist, always inspect each component.

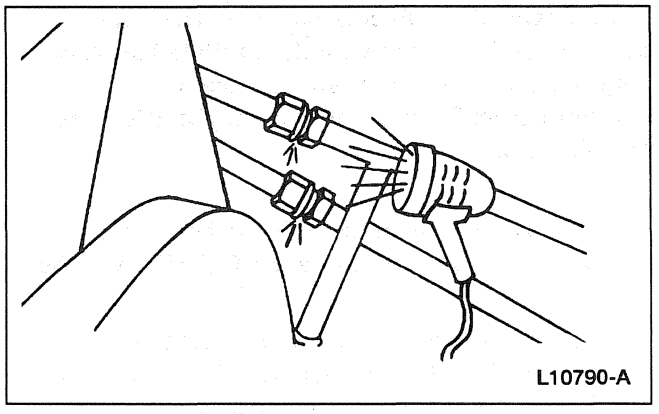
L10790-A

1. Check for leaks using a 120 Watt UV spot lamp.
   - Scan all components, fittings and lines of the A/C system.

2. After the leak is repaired, remove any traces of leak dye with a general purpose oil solvent.

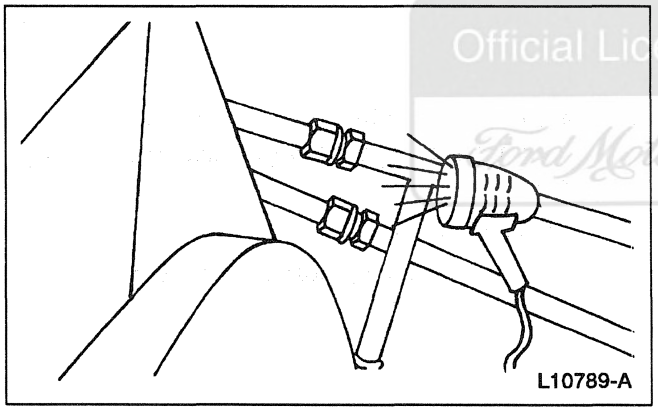
L10789-A

3. Verify the repair by operating the system for a short time and inspect with the UV spot lamp.

Official Licensed Product
Ford Motor Company

GENERAL PROCEDURES (Continued)

Discharging and Recovery

Special Tool(s)

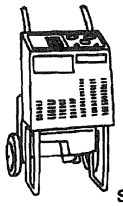 ST1834-A	R-134a A/C Refrigerant Center 023-00150 or equivalent
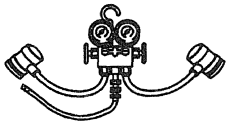 ST1928-A	R-134a Manifold Gauge Set 176-R032A or equivalent

1. Prior to recovering the refrigerant system, you must verify the purity of the refrigerant; refer to Refrigerant Identification Testing in this section.
2. **NOTE:** Some R-134a service centers require the use of an A/C Manifold Gauge Set; refer to the Manifold Gauge Set Connection in this section.

   Connect the R-134a A/C Refrigerant Center to the low- and high-pressure service gauge port valves.
3. Recover the refrigerant from the system following the operating instructions provided by the equipment manufacturer.
4. Once the refrigerant center has recovered the vehicle A/C system refrigerant, close the refrigerant center inlet valve (if so equipped). Then switch off the power supply.
5. Allow the vehicle A/C system to remain closed for about two minutes. Observe the system vacuum level as shown on the gauge. If the pressure does not rise, disconnect the refrigerant center hose(s).
6. If the system pressure rises, repeat steps 2 through 5 until the vacuum level remains stable for two minutes.

Official Licensed Product
Ford Motor Company

GENERAL PROCEDURES (Continued)

7. Perform the required service operations, then evacuate and recharge the A/C system; refer to Evacuation and Charging in this section.

Flushing

Special Tool(s)

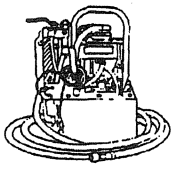 ST1459-A	A/C Flusher 014-00991 or equivalent (Part of 014-00990)
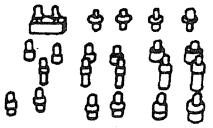 ST1476-A	A/C Flusher Fitting Kit 014-00992 or equivalent (Part of 014-00990)

Official Licensed Product
Ford Motor Company

GENERAL PROCEDURES (Continued)

⚠ CAUTION: This equipment is designed to be used only with the Ford A/C System Flushing Solvent F4AZ-19579-A. Use of other solvents can result in personal injury or damage to the vehicle and the flusher.

Do not let the flushing solvent come in contact with your eyes or skin. If eye contamination occurs, flush eyes with water for 15 to 20 seconds. Remove contaminated clothing, and wash affected skin with soap and water. Seek medical attention.

The 3.78 liters (1 gallon) of solvent and the filter used in this flusher are intended for use on ONE vehicle only. They may be used to flush both A/C evaporator core and A/C condenser core on an individual vehicle, but under no circumstances are they to be used on more than one vehicle. Residual contamination can contaminate other vehicles, causing possible damage to the A/C system components.

1. **NOTE:** System flushing must be performed prior to the installation of the replacement A/C compressor. Flush only the A/C evaporator core and A/C condenser core. Do not flush the suction accumulator/drier , A/C evaporator core orifice, hoses and mufflers. Hoses can be reused unless they contain debris.

   Follow the instructions included with the A/C flusher kit to flush both the A/C evaporator core and A/C condenser core.

2. Dispose of the drained flushing solvent and filer according to federal, state and local regulations.

Official Licensed Product
Ford Motor Company

GENERAL PROCEDURES (Continued)

Evacuation and Charging

Special Tool(s)

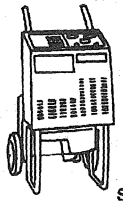 ST1834-A	R-134a A/C Refrigerant Center 023-00150 or equivalent
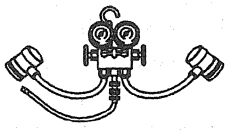 ST1928-A	R-134a Manifold Gauge Set 176-R032A or equivalent

(Continued)

Special Tool(s)

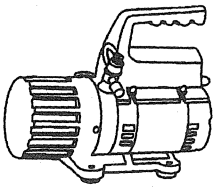 ST1685-A	1.2 CFM Vacuum Pump 023-R0162 or equivalent
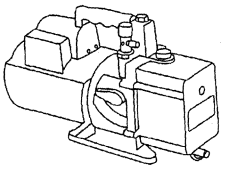 ST1686-A	4.0 CFM Vacuum Pump 023-R0163 or equivalent

1. Prior to charging the refrigerant system, you must verify the purity of the refrigerant; refer to Refrigerant Identification Testing in this section.

2. **NOTE:** Ford Motor Company recommends use of a charging station to perform evacuation and charging of the refrigerant system. If a charging station is not available, system charging may be accomplished using a separate vacuum pump, charging cylinder, and manifold gauge set; refer to Manifold Gauge Set Connection in this section.

   Connect a R-134a A/C Refrigerant Center to the low- and high-pressure service gauge port valves.

3. Evacuate the system until the low-pressure gauge reads at least 99.4 kPa (29.5 in-Hg) (vacuum) and as close as 101.1 kPa (30 in-Hg) as possible. Continue to operate the vacuum pump for a minimum of 45 minutes.

4. Turn off the evacuation pump. Observe the low-pressure gauge for 5 minutes to make sure that the system vacuum is held. If vacuum is not held for 5 minutes, leak-test the system, service the leaks, and evacuate the system again.

5. Properly oil match the system to verify that the correct amount of refrigerant oil is present in the system; refer to Refrigerant Oil Addition in this section.

Official Licensed Product
Ford Motor Company

GENERAL PROCEDURES (Continued)

6. Charge the system with the specified weight of refrigerant and refrigerant oil.

7. When no more refrigerant is being drawn into the system, start the engine and select MAX A/C operation. Set the blower motor speed to maximum and allow the remaining refrigerant to be drawn into the system. Continue to add refrigerant into the system until the specified weight of R-134a has been added. Close the charging cylinder valve and allow the system to pull any remaining refrigerant from the hose. When the suction pressure drops to approximately 207 kPa (30 psi), close the charging hose valve.

Refrigerant System Filtering After A/C Compressor Replacement

Special Tool(s)

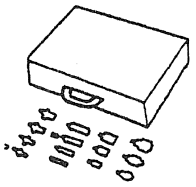 ST1252-A	R-12/R-134a Air Conditioning Test Fitting Set 412-DS028 (014-00333) or equivalent

Official Licensed Product Ford Motor Company

1. Install the replacement A/C compressor; refer to Section 412-03.

2. Install the replacement suction accumulator/drier; refer to Section 412-03.

3. Install the replacement A/C evaporator core orifice; refer to Section 412-03.

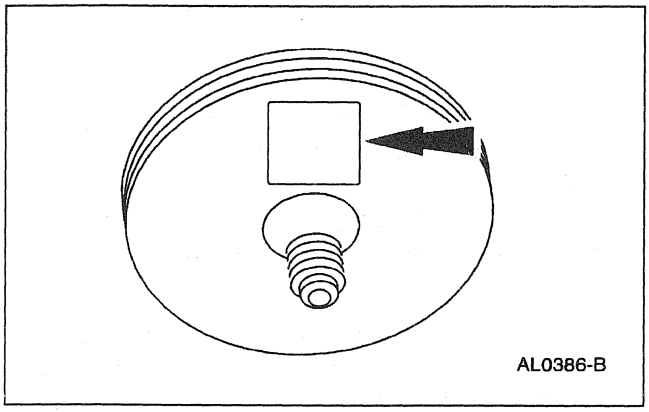

4. Orient the filter inlet toward the A/C condenser core.

GENERAL PROCEDURES (Continued)

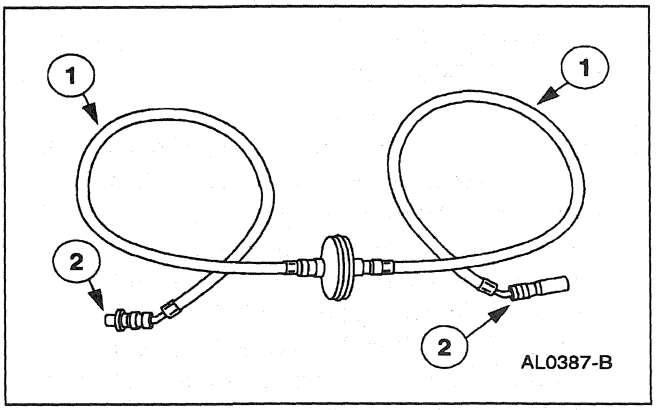

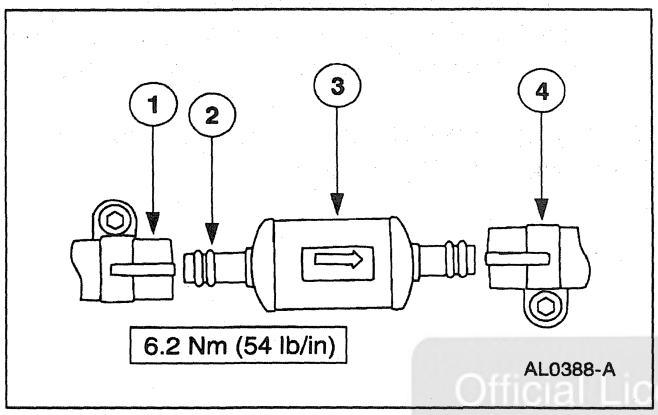

5. **NOTE:** The pancake filter is not permanently installed and will be removed at the end of this procedure.

   Temporarily install the pancake filter between the A/C condenser core and the condenser to evaporator tube (19835).

   1 Use flexible refrigerant hose of 17,238 kPa (2500 psi) burst rating.

   2 Make the connections using the R-12/R-134a Air Conditioning Test Fitting Set.

6. Permanently install the suction filter in the evaporator to compressor suction line close to the A/C compressor.

   1 Remove the length of suction hose (close to the compressor end) to accommodate the suction filter.

   2 Install two O-ring seals on each end of the suction filter.

   3 Install the suction filter in the evaporator to compressor suction line with the arrow pointing in the direction of refrigerant flow.

   4 Install the clamps.

Official Licensed Product
Ford Motor Company

7. Properly oil match the system; refer to Refrigerant Oil Addition in this section.

8. Evacuate and charge the system; refer to Evacuation and Charging in this section.

9. Check all refrigerant system hoses, lines and the position of the newly installed filters to be sure they do not interfere with other engine compartment components. If necessary, use tie straps to make adjustments.

10. Provide adequate airflow to the front of the vehicle (with a fan, if necessary). Select MAX A/C operation and set the blower motor speed to maximum. Start the engine and let it idle briefly. Make sure the A/C system is operating properly.

11. Gradually bring the engine up to 1200 rpm by running it at lower rpms for short periods (first at 800 rpm, then at 1000 rpm). Set the engine at 1200 rpm and run it for 1 hour with the A/C system operating.

GENERAL PROCEDURES (Continued)

12. Stop the engine.
13. Recover the refrigerant from the system; refer to Discharging and Recovery in this section.
14. Remove the fittings, flexible hoses and pancake filter from between the A/C condenser core and the condenser to evaporator tube.
15. Discard the pancake filter. It can be used one time only.
16. Reconnect the condenser to evaporator tube to the A/C condenser core.
17. Evacuate and charge the system; refer to Evacuation and Charging in this section.

Official Licensed Product
Ford Motor Company

GENERAL PROCEDURES (Continued)

Refrigerant Oil Addition

⚠ **CAUTION: During normal A/C operation, oil is circulated through the system with the refrigerant and a small amount is retained in each component. If certain components of the system are removed for replacement, some of the refrigerant oil will go with the component. To maintain the original total oil charge, it is necessary to compensate for the oil lost by adding oil to the system with the replacement part.**

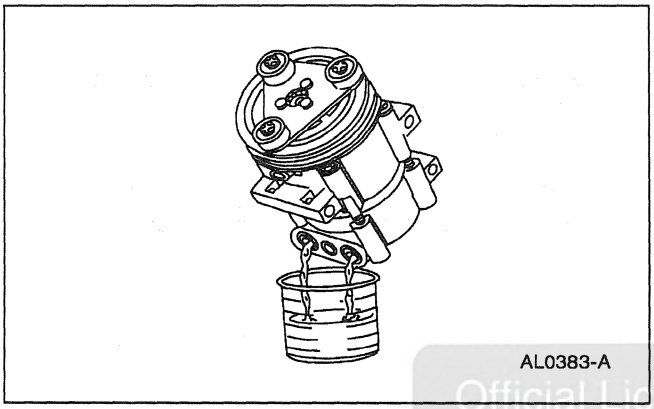
AL0383-A

1. **NOTE:** Service A/C compressors are shipped without compressor oil.

   Rotate the A/C compressor shaft six to eight revolutions while collecting oil in a clean measuring device.

   1 If the amount of oil drained from the old A/C compressor is between 85-142 ml (3-5 ounces), pour the same amount plus 30 ml (1 ounce) of clean Motorcraft YN-12c refrigerant oil or equivalent meeting Ford specification WSH-M1C231-B into the new.

   2 If the amount of oil that was removed from the old A/C compressor is greater than 142 ml (5 ounces), pour the same amount drained of clean Motorcraft YN-12c refrigerant oil or equivalent meeting Ford specification WSH-M1C231-B into the new A/C compressor.

   3 If the amount of oil that was removed from the A/C compressor is less than 85 ml (3 ounces), pour 85 ml (3 ounces) of clean Motorcraft YN-12c refrigerant oil or equivalent meeting Ford specification WSH-M1C231-B into the new A/C compressor.

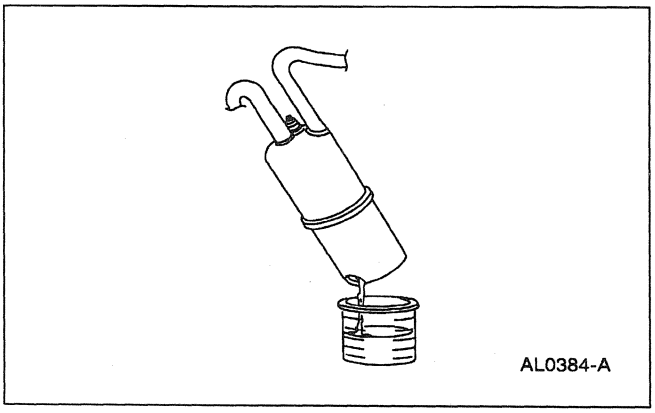
AL0384-A

2. For the suction accumulator/drier, drill two 1/2 inch holes in the suction accumulator/drier cylinder and drain the oil into a calibrated container.

   1 Add a quantity of new oil to match that drained from the old suction accumulator/drier plus 60 ml (2 ounces) of clean Motorcraft YN-12c refrigerant oil or equivalent meeting Ford specification WSH-M1C231-B.

Official Licensed Publication
Ford Motor Company

GENERAL PROCEDURES (Continued)

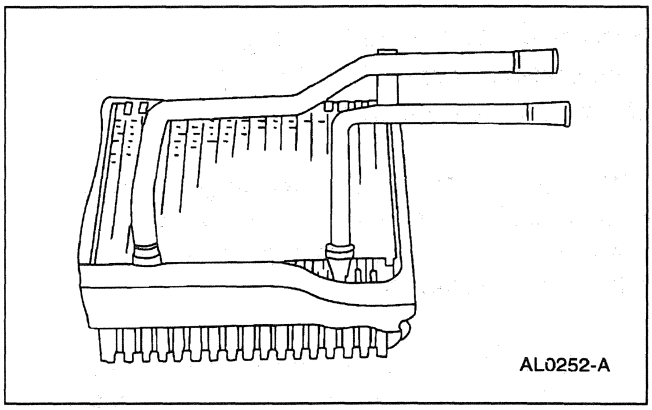

3. For the A/C evaporator core add 89 ml (3 ounces) of clean Motorcraft YN-12c refrigerant oil or equivalent meeting Ford specification WSH-M1C231-B to the suction accumulator/drier inlet tube.

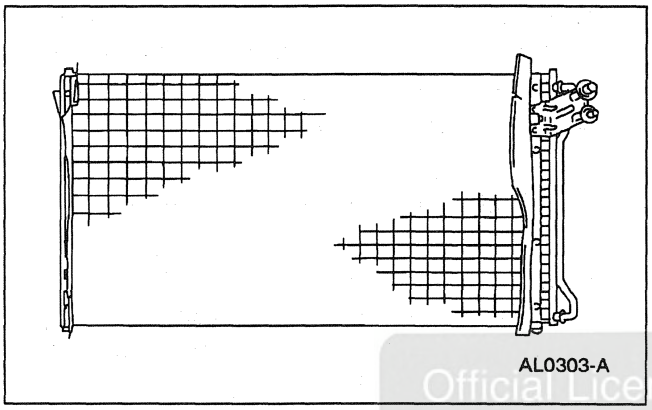

4. For the A/C condenser core, add 30 ml (1 ounce) of clean Motorcraft YN-12c refrigerant oil or equivalent meeting Ford specification WSH-M1C231-B to the A/C condenser core or the suction accumulator/drier inlet tube.

Official Licensed Product
Ford Motor Company

5. Add 60 ml (2ounces) of clean Motorcraft YN-12c refrigerant oil or equivalent meeting Ford specification WSH-M1C231-B to the suction accumulator/drier inlet tube when performing each of the following repairs:
   - replacement of the A/C evaporator core orifice
   - replacement of the A/C compressor pressure relief valve (19D644)
   - replacement of the refrigerant line
   - repair of an O-ring leak
   - repair of a charge port leak

6. Replacement of components that do not require discharge of refrigerant and resulting oil less, such as the A/C cycling switch and the A/C pressure transducer, do not require additional oil.

GENERAL PROCEDURES (Continued)

Inspection and Assembly Requirements — Following an A/C Compressor Failure

⚠ **CAUTION: To prevent refrigerant system contamination and possible failure of the replacement A/C compressor, perform the following procedures.**

1. **NOTE:** A dirty A/C evaporator core orifice or a condenser to evaporator tube containing black refrigerant oil and particles indicates that the A/C compressor has failed and must be replaced.

   Remove and discard the A/C evaporator core orifice; refer to Section 412-03.

2. Remove the A/C compressor; refer to Section 412-03.
   - Drain the residual refrigerant oil from the A/C compressor and measure the volume for proper system oil matching; refer to Refrigerant Oil Addition in this section.

Official Licensed Product
Ford Motor Company

3. **NOTE:** The suction accumulator/drier and A/C evaporator core orifice cannot be cleaned and must be replaced.

   Remove the suction accumulator/drier; refer to Section 412-03.
   - Drain the residual refrigerant oil from the suction accumulator/drier and measure the volume for proper oil system matching; refer to Refrigerant Oil Addition in this section.

4. **NOTE:** System flushing is the preferred method of cleaning. However, if flushing equipment is not available, perform system filtering.

   Perform an A/C system flushing or filtering procedure:
   - If A/C system flushing equipment is available, clean the A/C evaporator core and the A/C condenser core by flushing; refer to Flushing in this section.
   - If A/C system flushing equipment is not available, perform a system filtering procedure; refer to Refrigerant System Filtering After A/C Compressor Replacement in this section.

GENERAL PROCEDURES (Continued)

5. Install the replacement A/C compressor; refer to Section 412-03.

6. Install the replacement suction accumulator/drier; refer to Section 412-03.

7. Install the replacement A/C evaporator core orifice; refer to Section 412-03.

8. Properly oil match the system; refer to Refrigerant Oil Addition in this section.

9. Evacuate and charge the system; refer to Evacuation and Charging in this section.

Refrigerant Identification Testing

Special Tool(s)

ST1457-A	Refrigerant Analyzer 198-00001 or equivalent

Official Licensed Product
Ford Motor Company

1. **NOTE:** Prior to recovering or charging the refrigerant system, you must use an A/C refrigerant analyzer to identify gas samples taken directly from the refrigeration system or storage containers.

   Follow the instructions included with the Refrigerant Analyzer to obtain the sample for testing.

2. The analyzer will display one of the following:
   - R-12 or R-134a if the purity is better than 98% by weight.
   - FAIL if neither of the two gases have been identified or if they are not at least 98% pure.
   - HC and a horn will sound if the gas detected contains a hydrocarbon (flammable material).

GENERAL PROCEDURES (Continued)

3. **⚠ CAUTION: If contaminated refrigerant is detected, DO NOT recover the refrigerant into your recovery/recycling equipment.**

   Recover the contaminated refrigerant using suitable recovery-only equipment designed for capturing and storing contaminated refrigerant; refer to Contaminated Refrigerant Handling in this section.

Contaminated Refrigerant Handling

1. **⚠ CAUTION: If contaminated refrigerant is detected, DO NOT recover the refrigerant into your recovery/recycling equipment.**

   Recover the contaminated refrigerant using suitable recovery-only equipment designed for capturing and storing contaminated refrigerant.

   - This equipment must only be used to recover contaminated refrigerant to prevent the spread to other vehicles.
   - If this equipment is not available, contact an A/C service facility in your area with the proper equipment to perform this service.

Official Licensed Product
Ford Motor Company

2. Determine and correct the cause of the customer's initial concern.

3. **NOTE:** Residual refrigerant oil in the suction accumulator/drier must be drained and measured for proper oil system matching; refer to Refrigerant Oil Addition in this section.

   The suction accumulator/drier cannot be cleaned and must be replaced.

   Remove the suction accumulator/drier; refer to Section 412-03.

4. Clean the A/C evaporator core and the A/C condenser core by flushing; refer to Flushing in this section.

5. Install the replacement suction accumulator/drier; refer to Section 412-03.

6. Properly oil match the system; refer to Refrigerant Oil Addition in this section.

GENERAL PROCEDURES (Continued)

7. Evacuate and charge the system; refer to Evacuation and Charging in this section.

8. Dispose of contaminated refrigerant according to all federal, state and local regulations.

Vacuum Hose Repair — Mini-Tube

Special Tool(s)

ST1176-A	Vacuum Pump 416-D002 (D95L-7559-A) or equivalent

1. Measure the length of the damaged area of the mini-tube vacuum hose.

2. Cut a piece of standard 1/8 inch inner diameter vacuum hose approximately 25 mm (1 inch) longer than the damaged area of the mini-tube vacuum hose.

Official Licensed Ford Motor Company

3. Cut off the mini-tube vacuum hose on each side of the damaged area.

4. **WARNING: READ THE WARNING INFORMATION ON THE PRODUCT LABEL.**

   Dip the mini-tube hose ends in commercially available paint thinner containing Methyl Ethyl Ketone (MEK). This solvent will seal the mini-tube in the vacuum hose.

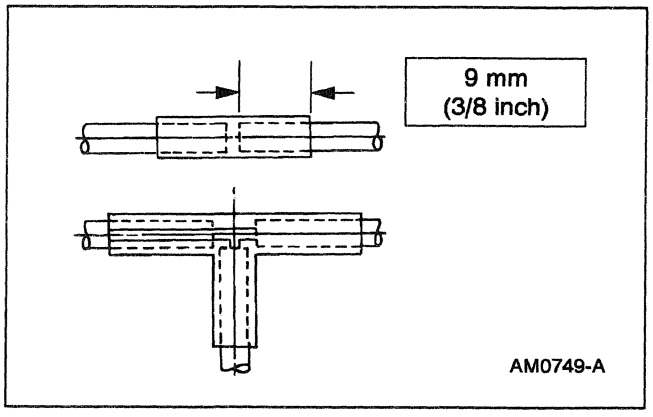

5. Insert the ends of the mini-tube vacuum hose approximately 9 mm (3/8 inch) into the ends of the standard 1/8 inch service vacuum hose section.

GENERAL PROCEDURES (Continued)

6. Shake the service joint after assembly to make sure the solvent is dispersed and the vacuum line is not plugged.

7. Test the system for a vacuum leak in the repair area.
   - Use the Vacuum Pump or equivalent.

SPECIFICATIONS

General Specifications

Item	Specification
A/C Compressor	FS-10 Swashplate, 5 Double Acting Pistons
Rotational Torque Nm (Lb/Ft)	10 (7)
Magnetic Clutch	
Air Gap Between Pulley and Hub mm (in)	0.35-0.85 (0.014-0.033)
Lubricant	
Refrigerant Oil Motorcraft YN-12c	WSH-M1C231-B

(Continued)

General Specifications

Item	Specification
Capacity kg (oz)	.960 (34)
Refrigerant	
Motorcraft YN-11 (R-134a)	WSH-M17B19-A
Capacity ml (oz)	207 (7)
Cleaner	
A/C System Flushing Solvent	
Ford F4AZ-19579-A	—

Official Licensed Product
Ford Motor Company

SECTION 412-01 Air Distribution and Filtering

VEHICLE APPLICATION: Mark VIII

SUBJECT	PAGE
DESCRIPTION AND OPERATION	
Air Distribution	412-01-2
DIAGNOSIS AND TESTING	
Air Distribution	412-01-4
REMOVAL AND INSTALLATION	
Duct — Heater Outlet Floor	412-01-8
Duct — LH A/C Evaporator Register	412-01-6
Duct — Rear Seat Airflow	412-01-7
Register — Center	412-01-5
Register — LH	412-01-5
DISASSEMBLY AND ASSEMBLY	
Instrument Panel Air Distribution Ducts	412-01-8
SPECIFICATIONS	412-01-11

Official Licensed Product
Ford Motor Company

DESCRIPTION AND OPERATION

Air Distribution

There are two sources of air available to the air distribution system:

- outside air
- recirculated air

Recirculated air is only used during MAX A/C, AUTOMATIC and OFF modes.

Air distribution within the vehicle is controlled by the electronic automatic temperature control system in the AUTOMATIC mode but can be overridden by the driver if desired. Airflow control doors are used to direct airflow within the A/C evaporator housing (19850) and heater air plenum chamber (18471). Vacuum control motors (18A318) are used to position these airflow control doors. Refer to Section 412-00 for description and operation of each of the system functions.

The air distribution system is designed to provide airflow from the defrost nozzle when no vacuum is applied to any of the vacuum control motors . This is done to prevent a situation where defrost cannot be obtained due to a system vacuum leak.

Air enters the passenger compartment from the:

- instrument panel A/C registers (19893).
- heater outlet floor duct (18C433).
- windshield defroster hose nozzle (18490).
- side window demisters.
- rear seat airflow duct (18C420).

Passenger compartment air is exhausted from the vehicle through open windows or luggage compartment air vents.

Official Licensed Product
Ford Motor Company

DESCRIPTION AND OPERATION (Continued)

Component Locations

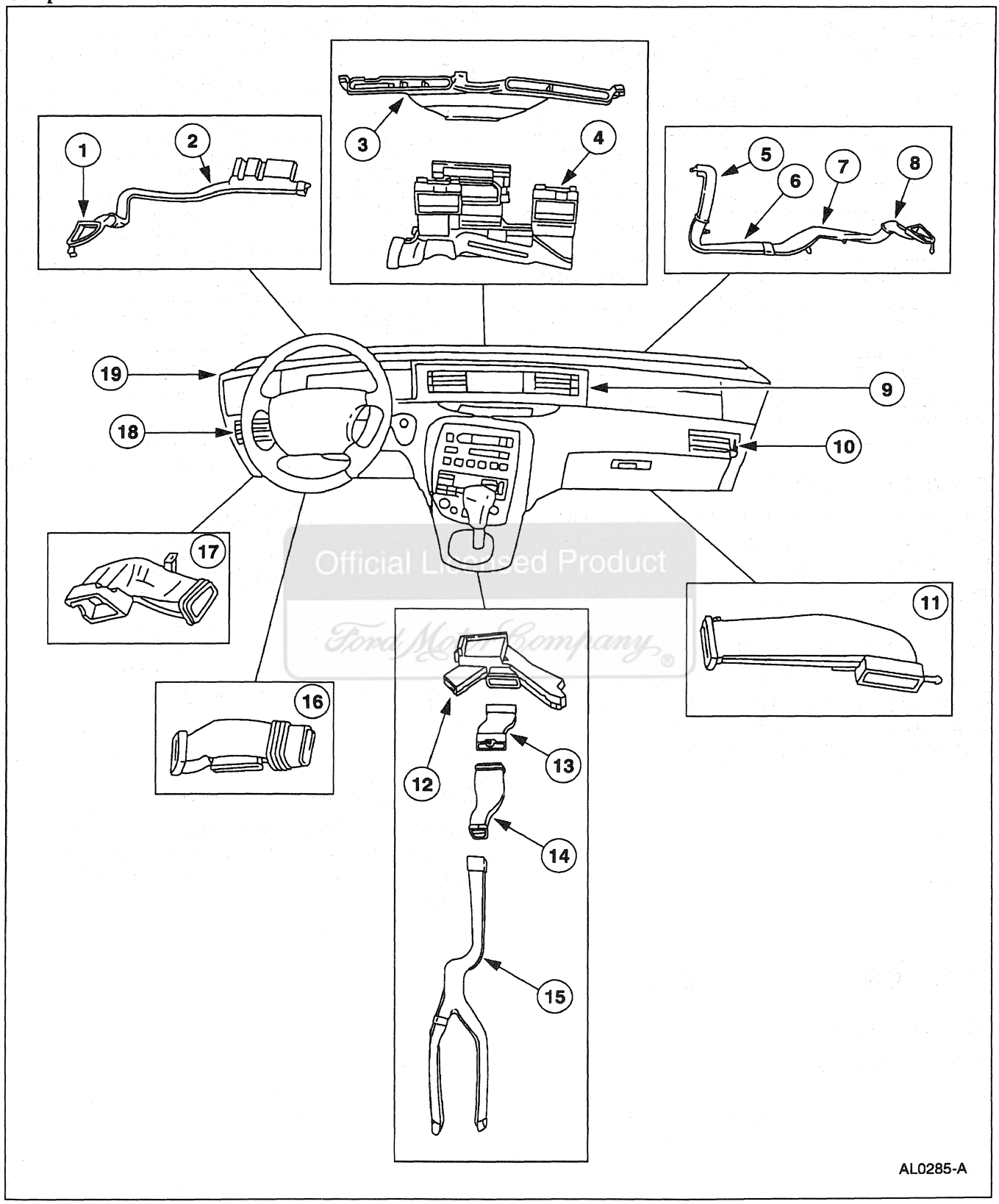

Official Licensed Product
Ford Motor Company

DESCRIPTION AND OPERATION (Continued)

Item	Part Number	Description
1	19E630	A/C Side Window Demister and Hose (LH)
2	19E662	A/C Plenum Demister Adapter (LH)
3	18490	Windshield Defroster Hose Nozzle
4	18471	Heater Air Plenum Chamber
5	19E662	A/C Plenum Demister Adapter (RH Inner)
6	19E662	A/C Plenum Demister Adapter (RH Center)
7	19E662	A/C Plenum Demister Adapter (RH Outer)
8	19E630	A/C Side Window Demister and Hose (RH)

(Continued)

Item	Part Number	Description
9	044D70	Instrument Panel Finish Panel
10	19893	A/C Register (RH)
11	19B680	A/C Evaporator Register Duct (RH)
12	18C433	Heater Outlet Floor Duct
13	18C396	Extension Duct
14	18C420	Rear Seat Airflow Duct
15	18C420	Rear Seat Airflow Duct
16	19B680	A/C Evaporator Register Duct (LH)
17	19B680	A/C Evaporator Register Duct (LH)
18	19893	A/C Register (LH)
19	04320	Instrument Panel

Instrument Panel Registers

There are two A/C registers in the instrument panel (04320) and two A/C registers in the instrument panel finish panel (044D70) .

The instrument panel mounted A/C register assemblies are serviceable although the barrels can be replaced without removing the A/C register assemblies.

The center A/C register assemblies are part of the instrument panel finish panel , and not serviced separately, although the barrels can be replaced without removing the instrument panel finish panel .

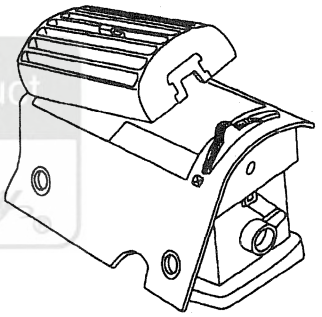

AL0379-A

Defroster, Demister and Register Ducts

The defroster, demister and register ducts carry climate-controlled air from the heater air plenum chamber to the various instrument panel and floor outlets.

DIAGNOSIS AND TESTING

Air Distribution

Refer to Section 412-00.

REMOVAL AND INSTALLATION

Register — Center

1. The center A/C registers (19893) are part of the instrument panel finish panel (044D70). To remove the instrument panel finish panel, refer to Section 501-12.

Register — LH

Removal

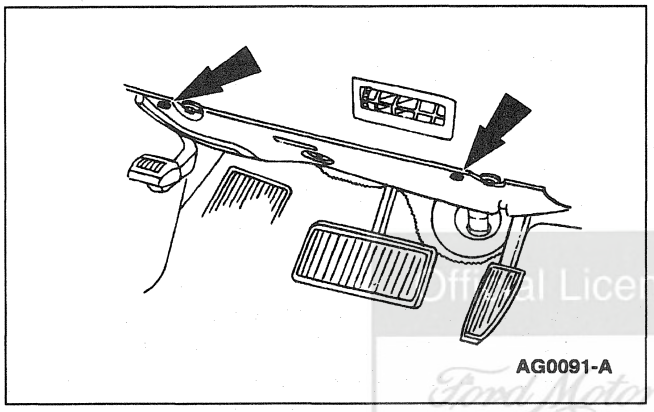
AG0091-A

1. Remove the screws from the LH instrument panel insulator (046A25).

Official Licensed Product
Ford Motor Company

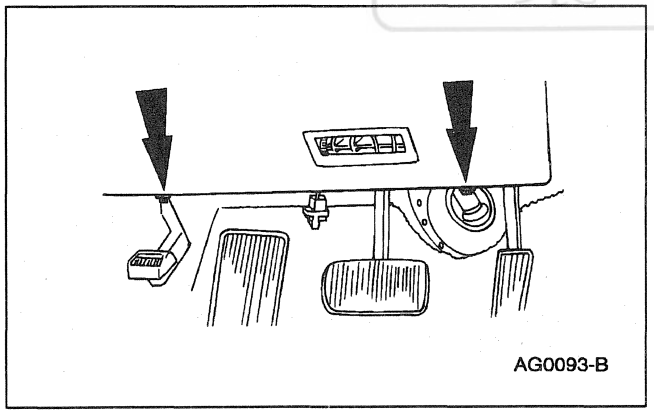
AG0093-B

2. Remove the screws and the instrument panel steering column cover (04459) from the instrument panel (04320).

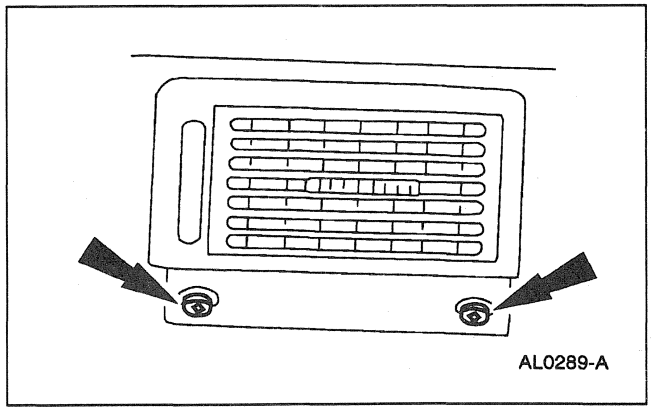
AL0289-A

3. Remove the screws and the A/C register (19893) from the instrument panel.

REMOVAL AND INSTALLATION (Continued)

Installation

1. Follow the removal procedure in reverse order.

Duct — LH A/C Evaporator Register

Removal

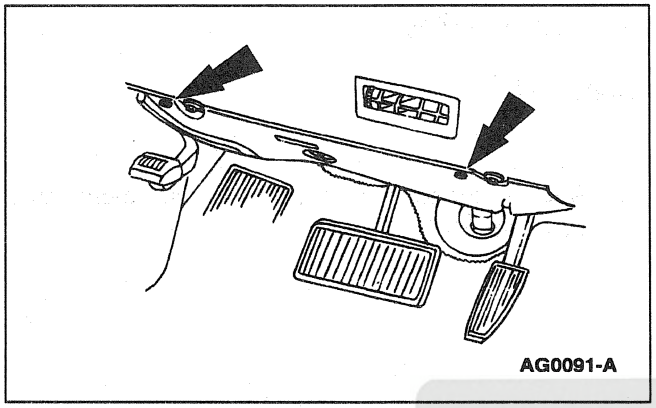
AG0091-A

1. Remove the screws from the LH instrument panel insulator (046A25).

Official Licensed Product
Ford Motor Company

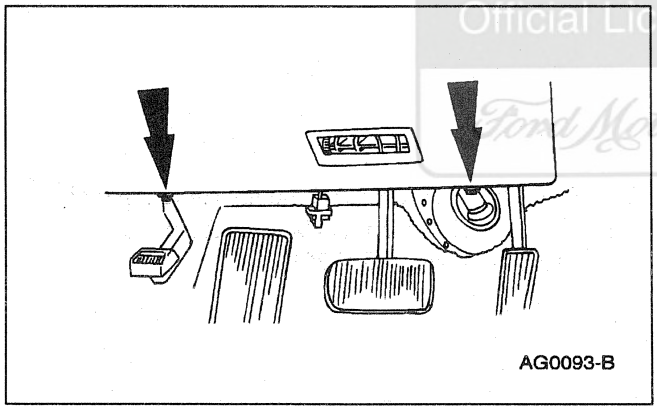
AG0093-B

2. Remove the screws and the instrument panel steering column cover (04459) from the instrument panel (04320).

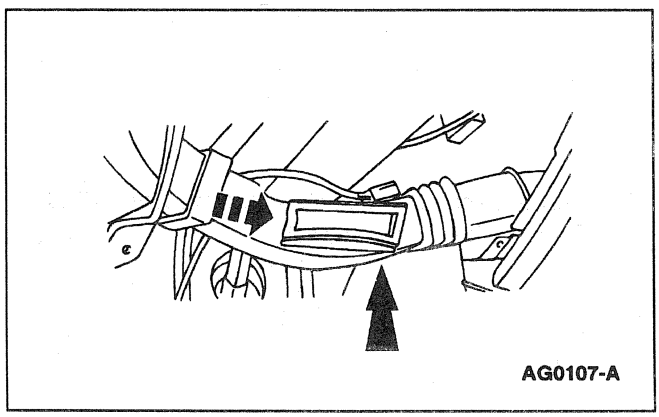
AG0107-A

3. Compress and remove the A/C evaporator register duct (19B680).

REMOVAL AND INSTALLATION (Continued)

Installation

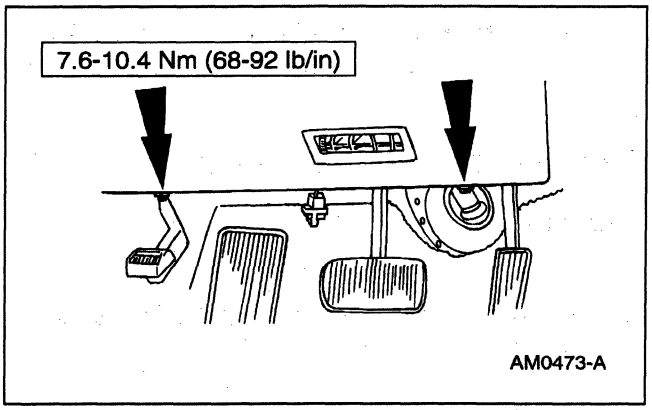

1. Follow the removal procedure in reverse order.

Duct — Rear Seat Airflow

Removal

Official Licensed Product
Ford Motor Company

1. Remove the console panel (045A36); refer to Section 501-12.
2. Remove the console front compartment (061A78) from the console panel.

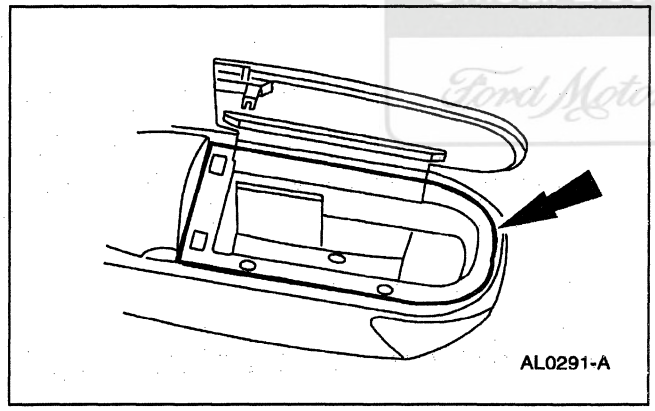

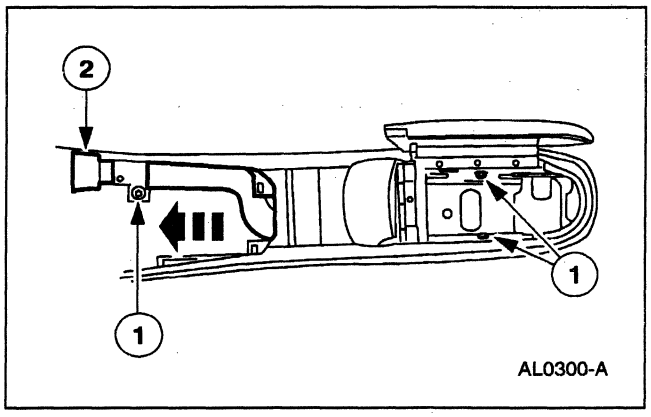

3. Remove the rear seat airflow duct (18C420).
   1 Remove the screws.
   2 Pull the rear seat airflow duct from the console panel.

REMOVAL AND INSTALLATION (Continued)

Installation

1. Follow the removal procedure in reverse order.

Duct — Heater Outlet Floor

Removal

1. Remove the instrument panel (04320); refer to Section 501-12.

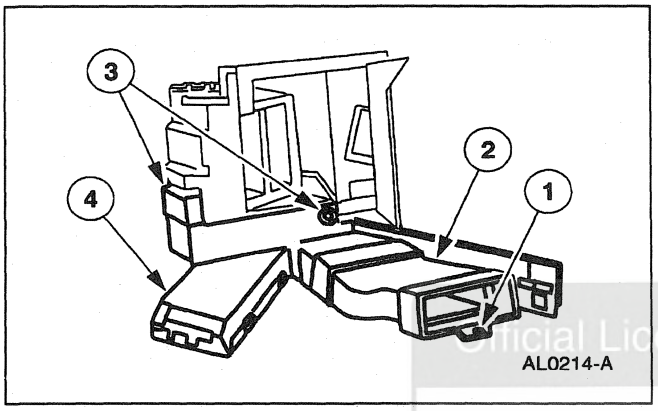

2. Remove the heater outlet floor duct (18C433).
   1 Remove the screw.
   2 Remove the duct extension.
   3 Remove the screws.
   4 Remove the heater outlet floor duct.

Official Licensed Product
Ford Motor Company

Installation

1. Follow the removal procedure in reverse order.

DISASSEMBLY AND ASSEMBLY

Instrument Panel Air Distribution Ducts

Disassembly

1. Remove the instrument panel (04320) ; refer to Section 501-12.

DISASSEMBLY AND ASSEMBLY (Continued)

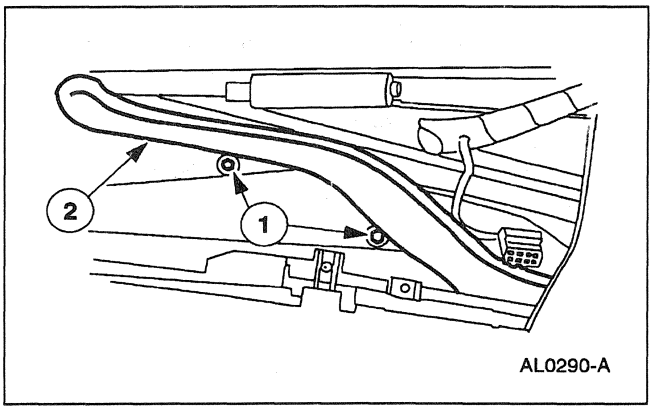

2. Remove the RH A/C plenum demister adapter (19E662) .
   1 Remove the screws.
   2 Remove the A/C plenum demister adapter.

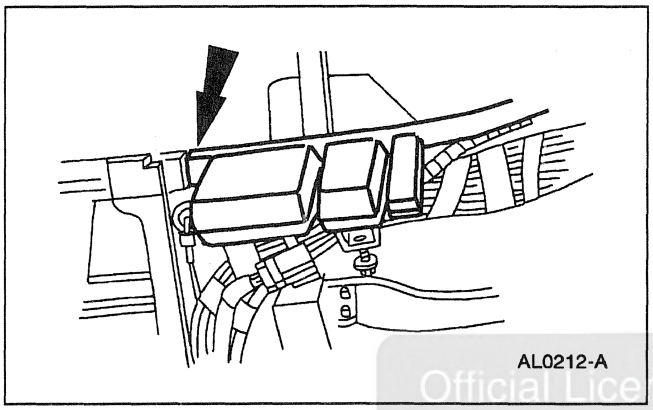

3. Remove the LH A/C plenum demister adapter.

Official Licensed Product
Ford Motor Company

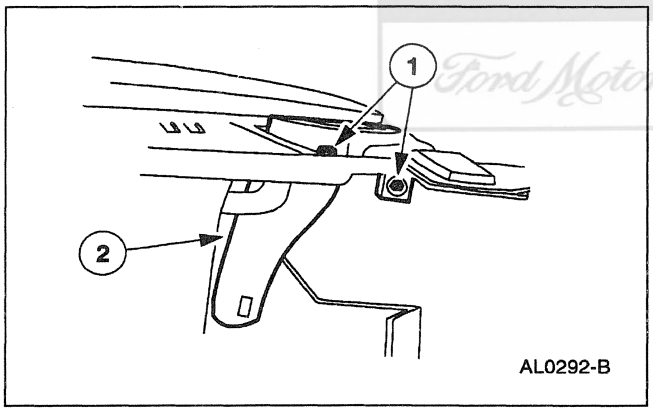

4. Remove the LH A/C side window demister and hose (19E630).
   1 Remove the screw.
   2 Remove the A/C side window demister and hose.

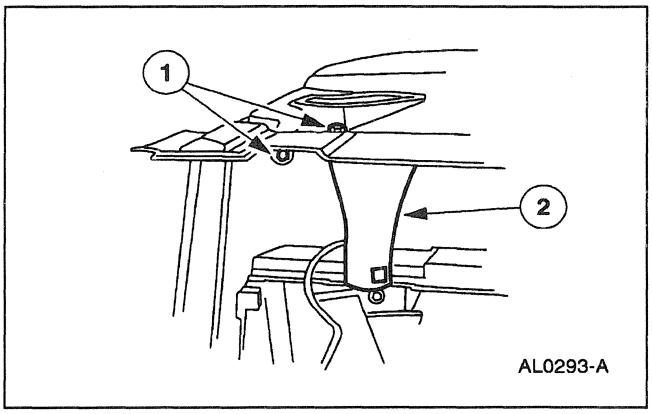

5. Remove the RH A/C side window demister and hose.
   1 Remove the screws.
   2 Remove the A/C side window demister and hose.

DISASSEMBLY AND ASSEMBLY (Continued)

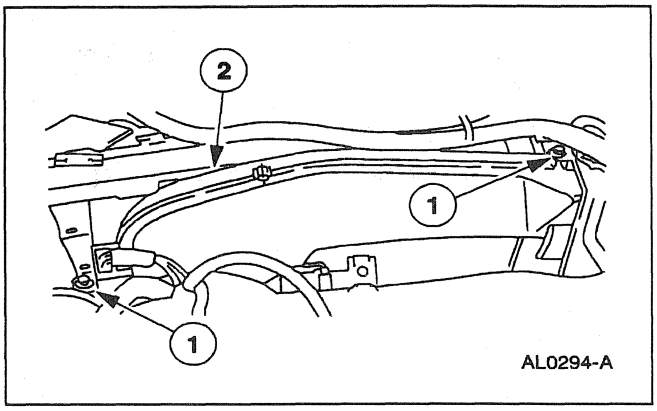

6. Remove the RH A/C evaporator register duct (19B680).
   1 Remove the screws.
   2 Remove the A/C evaporator register duct.

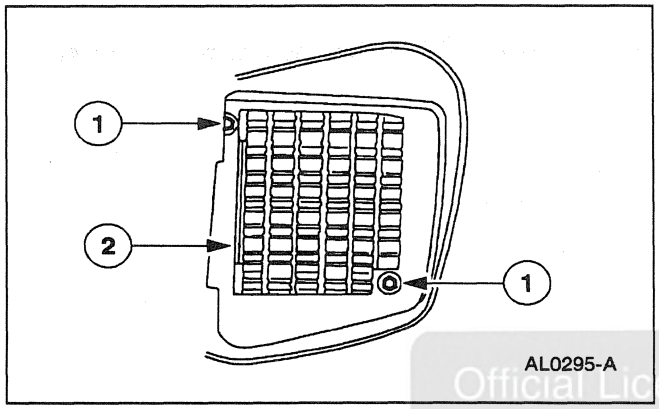

7. Position the fuse panel aside.
   1 Remove the screws.
   2 Position the fuse panel to improve access to the LH A/C evaporator register duct .

Official Licensed Product
Ford Motor Company

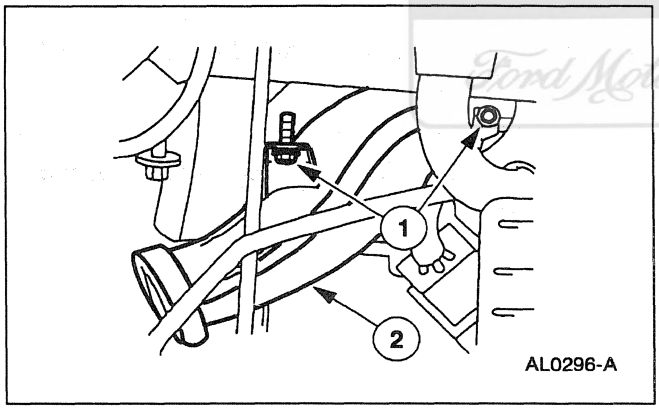

8. Remove the LH A/C evaporator register duct .
   1 Remove the screws.
   2 Remove the A/C evaporator register duct.

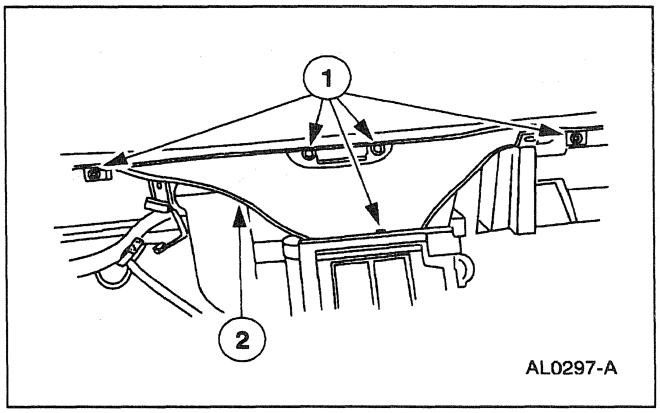

9. Remove the windshield defroster hose nozzle (18490).
   1 Remove the screws.
   2 Remove the windshield defroster hose nozzle.

DISASSEMBLY AND ASSEMBLY (Continued)

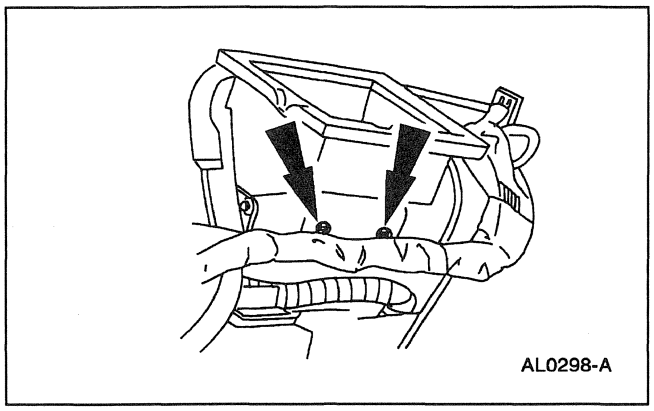

10. Disconnect the wire harness retainers from the heater air plenum chamber (18471).

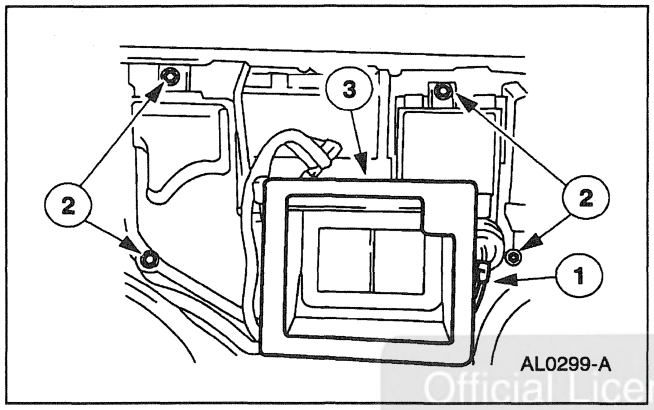

11. Remove the heater air plenum chamber.
    1 Disconnect the vacuum hose.
    2 Remove the screws.
    3 Remove the heater air plenum chamber.

Official Licensed Product
Ford Motor Company

Assembly

1. Follow the disassembly procedure in reverse order.

SPECIFICATIONS

Torque Specifications

Description	Nm	Lb/In
Instrument Panel Steering Column Cover Screws	7.6-10.4	68-92

SECTION 412-02 Heating/Defrosting

VEHICLE APPLICATION: Mark VIII

SUBJECT	PAGE
DESCRIPTION AND OPERATION	
Heating and Defrosting	412-02-2
DIAGNOSIS AND TESTING	
Heating and Defrosting	412-02-3
REMOVAL AND INSTALLATION	
Blower Motor	412-02-4
Evaporator Core Housing	412-02-5
Heater Core	412-02-9
Heater Hose	412-02-3
DISASSEMBLY AND ASSEMBLY	
Evaporator Core Housing	412-02-10
SPECIFICATIONS	412-02-14

Official Licensed Product
Ford Motor Company

DESCRIPTION AND OPERATION

Heating and Defrosting

The heating and defrosting system has the following features:

- Controls the temperature and, during A/C operation, reduces the relative humidity of the air inside the vehicle.
- Delivers heated or cooled air to maintain the vehicle interior temperature and comfort level.
- Controls the A/C blower motor speed.
- Cooling or heating can be adjusted to maintain the desired temperature.
- System uses a reheat method to provide conditioned air to the passenger compartment.
- The blower motor (18527) draws outside air through the A/C recirculating air duct (19C590) from just below the windshield during all system operations except for MAX A/C cooling (when recirculated air is used).
- All airflow from the blower motor passes through the A/C evaporator core (19860).
- The temperature is then regulated by reheating a portion of the air and blending it with the remaining cool air to the desired temperature.
- The temperature blending is varied by the air temperature control doors, which regulate the amount of air that flows through and around the heater core (18476) , where it is then mixed and distributed.

Component Locations

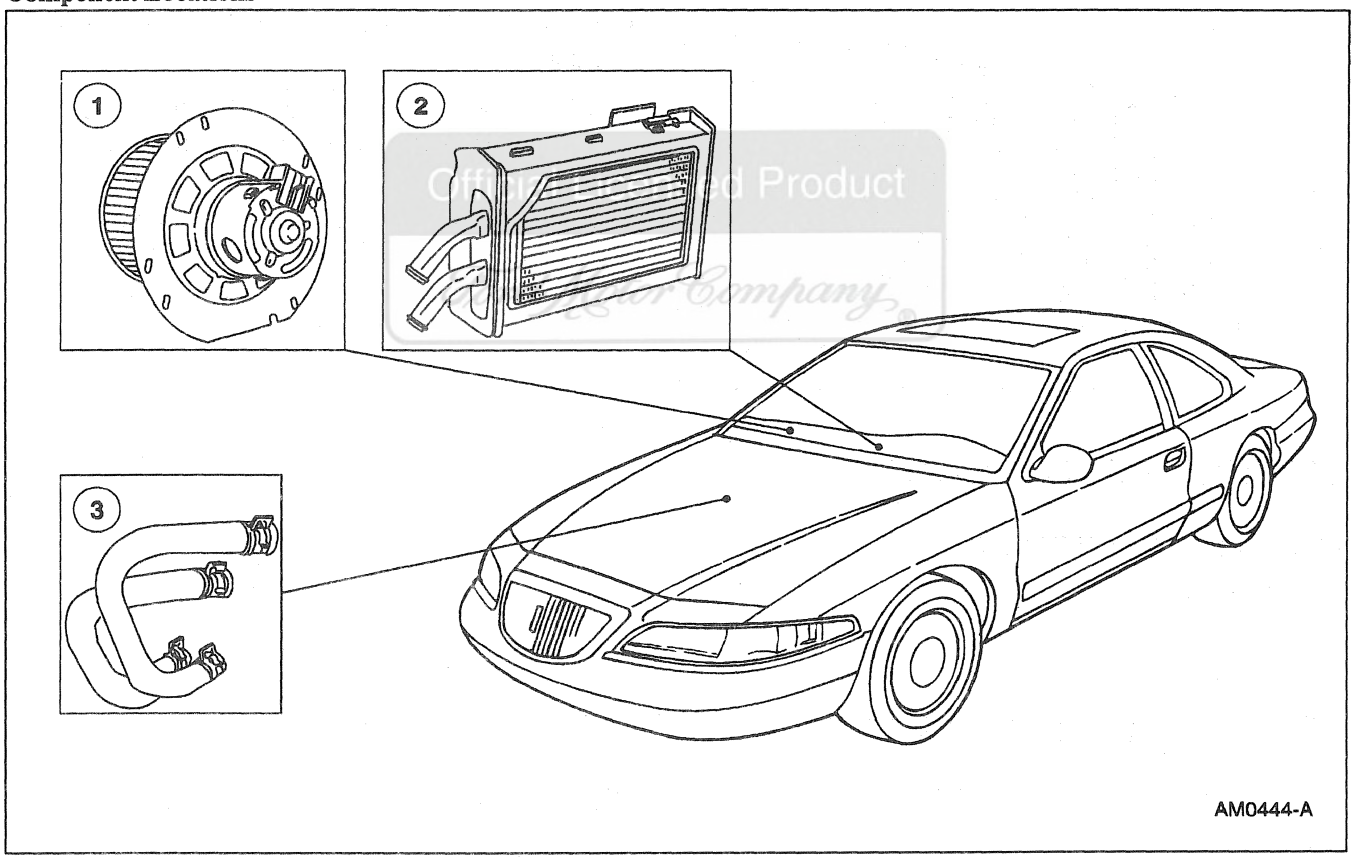

Item	Part Number	Description
1	18527	Blower Motor
2	18476	Heater Core
3	18472	Heater Water Hoses

DESCRIPTION AND OPERATION (Continued)

A/C Evaporator Housing

The A/C evaporator housing (19850) has the following features:

- split case design
- located behind the instrument panel (04320) between the A/C recirculating air duct and heater air plenum chamber (18471)

The A/C evaporator housing assembly contains the following major components:

- A/C evaporator core
- heater core
- air temperature control doors
- heater air damper door

Heater Core

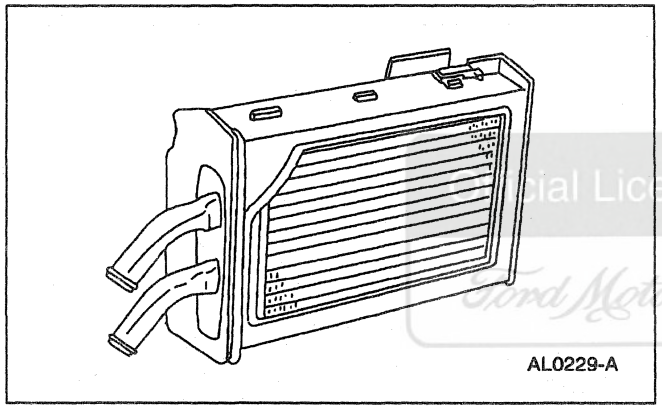

The heater core consists of a number of fins and tubes arranged to extract heat from the engine coolant and transfer it to air passing through the heater core.

Blower Motor

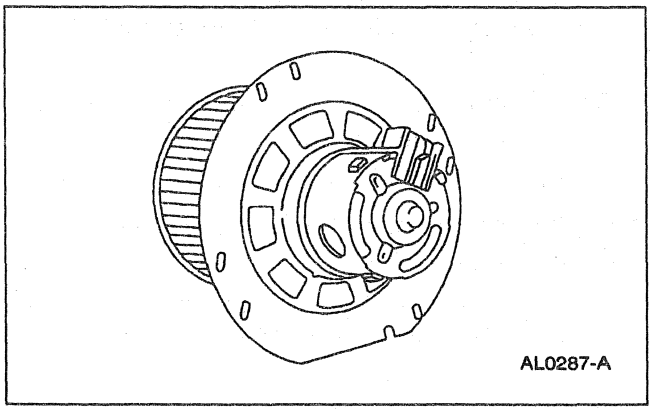

The blower motor is mounted in the A/C evaporator housing.

- Blower motor speed is controlled by the electronic automatic temperature control module through a A/C blower motor speed control (19E624).
- The blower motor has the A/C blower wheel (19834) attached to move air through the A/C evaporator housing.

Commercial Licensee Ford Motor Company

DIAGNOSIS AND TESTING

Heating and Defrosting

Refer to Section 412-00.

REMOVAL AND INSTALLATION

Heater Hose

Removal

1. Drain the coolant from the radiator (8005) so the coolant level is below the heater core (18476); refer to Section 303-03.

REMOVAL AND INSTALLATION (Continued)

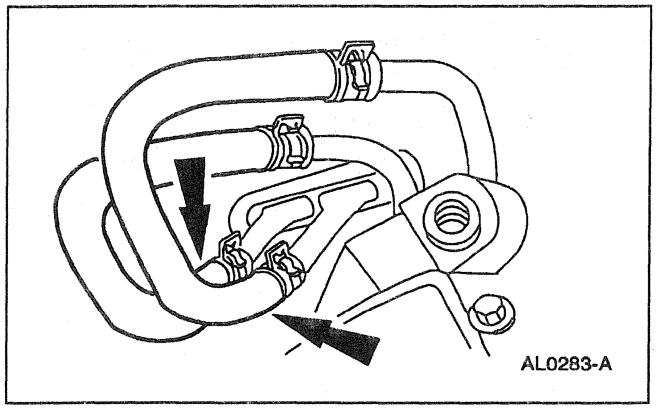

2. Disconnect the heater water hoses (18472) .

Installation

1. Follow the removal procedure in reverse order.

Blower Motor

Removal

Official Licensed Product
Ford Motor Company

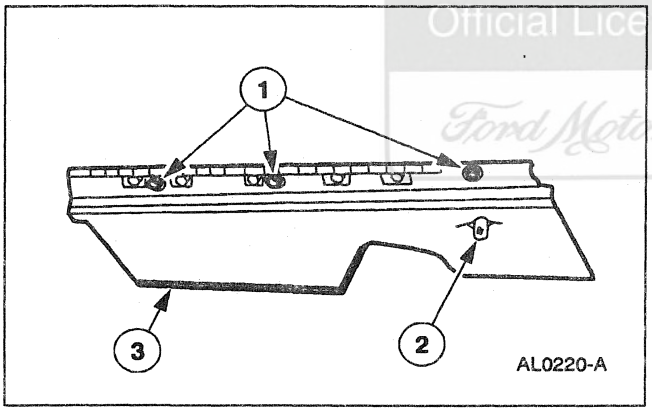

1. Remove the RH instrument panel insulator (046A24) .
   1 Remove the screws.
   2 Disconnect the courtesy lamp.
   3 Remove the instrument panel insulator .

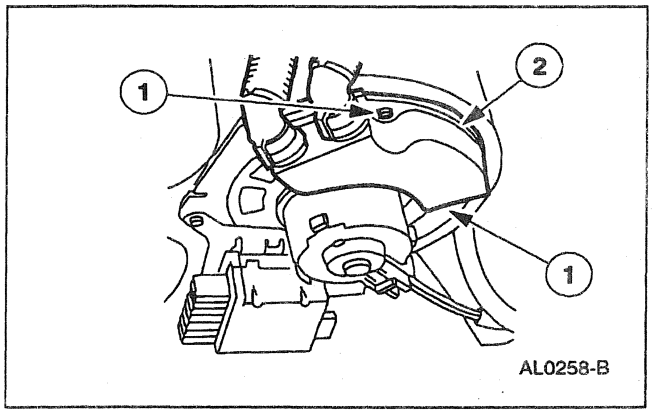

2. Position the A/C evaporator air control venturi (19E628) to the side.
   1 Remove the screws.
   2 Position the A/C evaporator air control venturi to the side.

REMOVAL AND INSTALLATION (Continued)

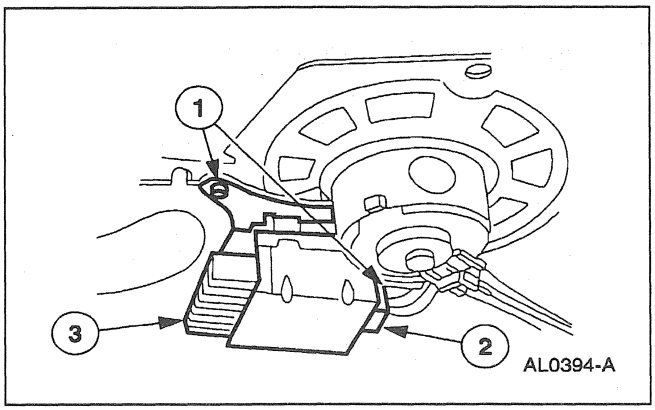

3. Position the A/C blower motor speed control (19E624) to the side.
   1 Remove the screws.
   2 Disconnect the wire harness connectors.
   3 Position the A/C blower motor speed control to the side.

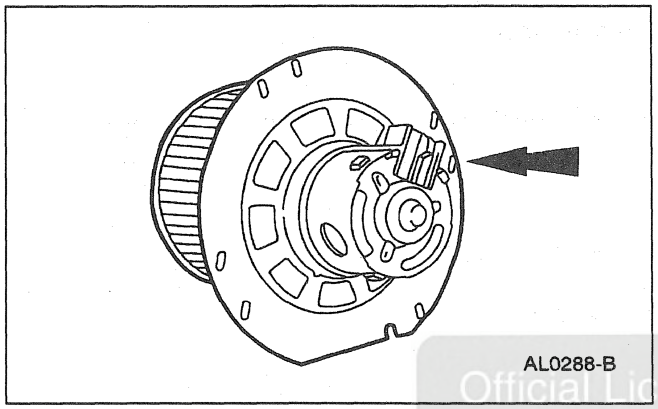

4. Remove the blower motor (18527) .

Official Licensed Product
Ford Motor Company

Installation

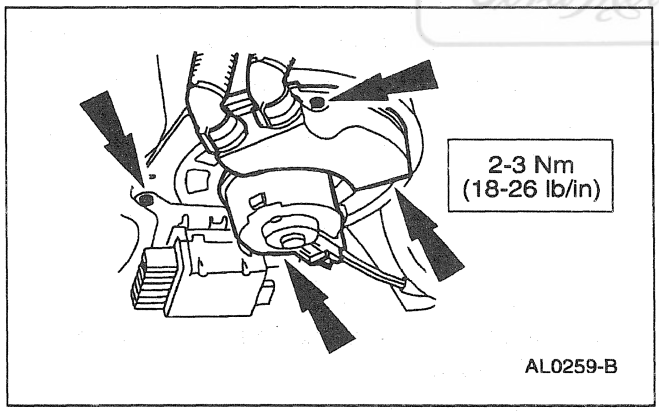

1. Follow the removal procedure in reverse order.

Evaporator Core Housing

Removal

1. Remove the instrument panel (04320) ; refer to Section 501-12.

REMOVAL AND INSTALLATION (Continued)

2. Drain the coolant from the radiator (8005) so the coolant level is below the heater core (18476) ; refer to Section 303-03.

3. Recover the refrigerant; refer to Section 412-00.

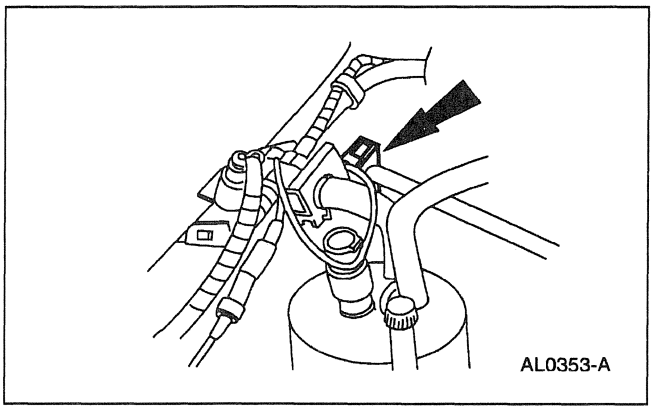

4. Disconnect the condenser to evaporator tube (19835) from the A/C evaporator core (19860) ; refer to the Spring Lock Couplings Disconnect and Connect general procedure in Section 412-00.

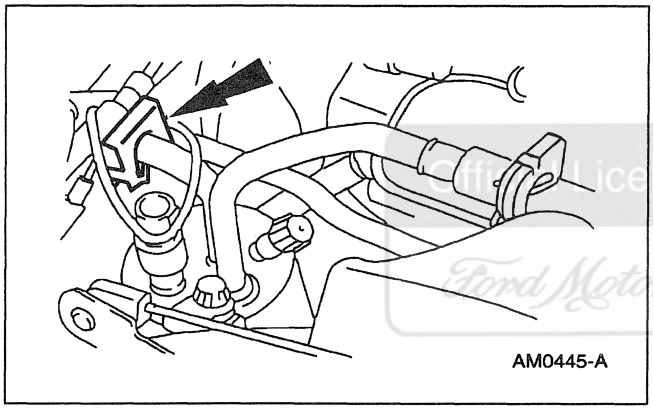

5. Disconnect the suction accumulator/drier (19C836) from the A/C evaporator core ; refer to the Spring Lock Couplings Disconnect and Connect general procedure in Section 412-00.

Officially Licensed Product
Ford Motor Company

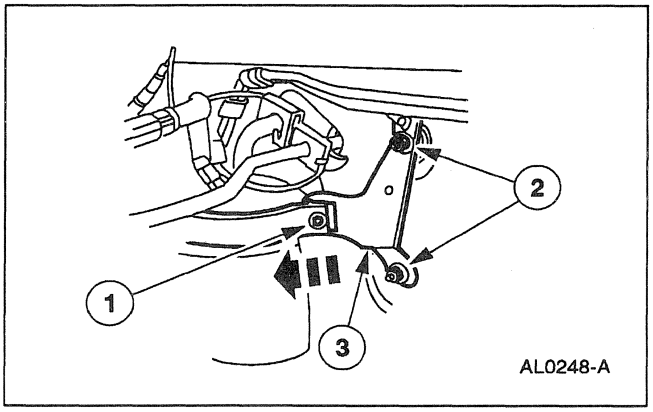

6. Position the A/C accumulator bracket (19D606) away from the cowl.
   1 Loosen the clamp screw.
   2 Remove the nuts.
   3 Rotate the A/C accumulator bracket away from the cowl.

REMOVAL AND INSTALLATION (Continued)

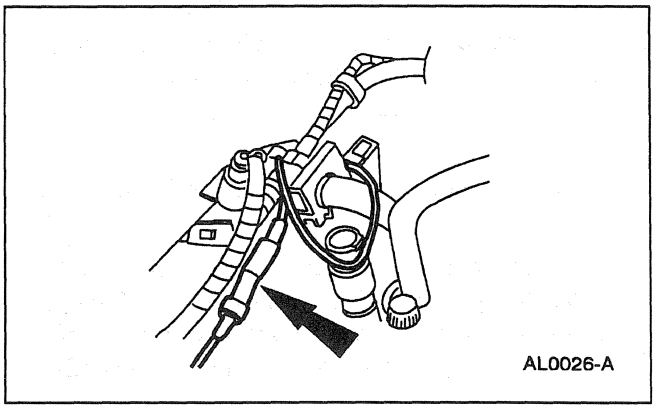

7. Disconnect the vacuum supply hose.

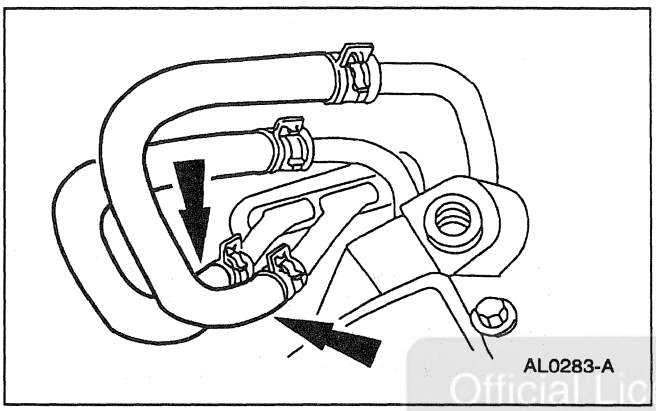

8. Disconnect the heater water hoses (18472) from the heater core .

Official Licensed Product
Ford Motor Company

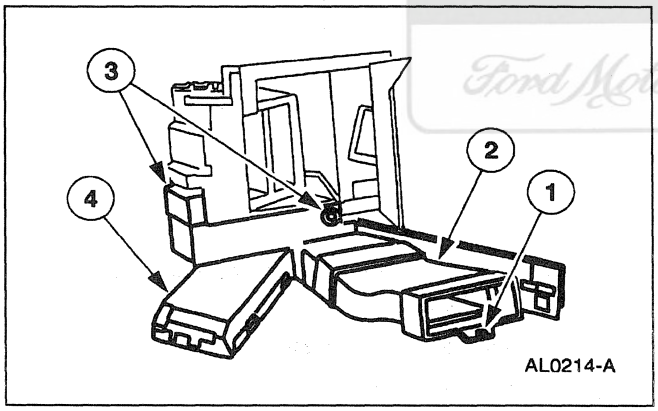

9. Remove the heater outlet floor duct (18C433) .
   1 Remove the screw.
   2 Remove the duct extension.
   3 Remove the screws.
   4 Remove the heater outlet floor duct.

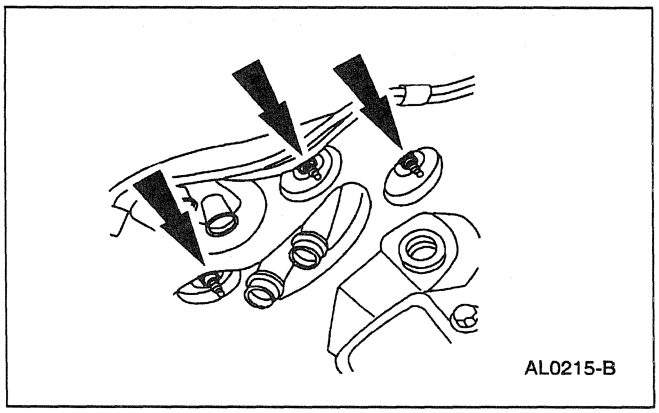

10. Remove the A/C evaporator housing retaining nuts.

REMOVAL AND INSTALLATION (Continued)

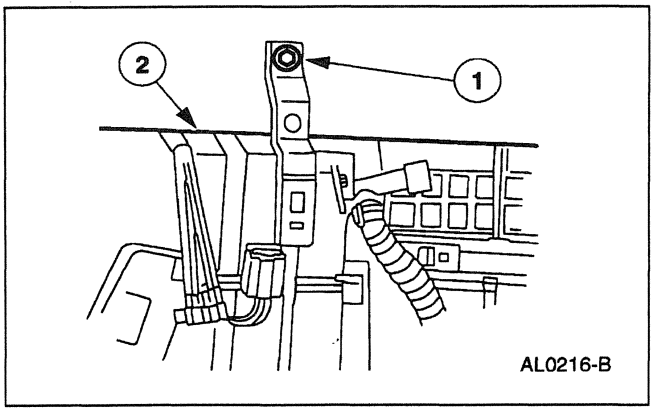

11. Remove the A/C evaporator housing (19850).
    1 Remove the screw.
    2 Remove the A/C evaporator housing from the vehicle.

Installation

1. Follow the removal procedure in reverse order.

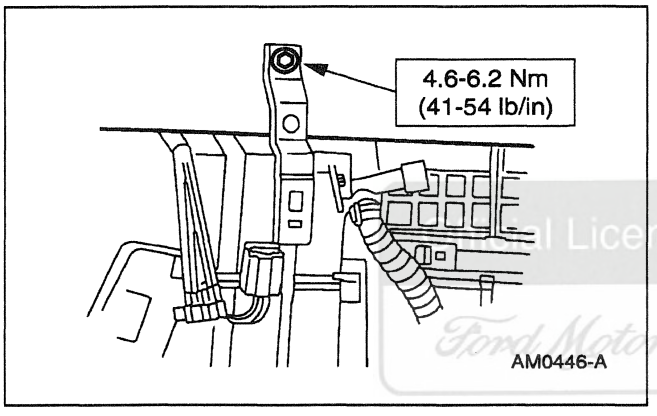

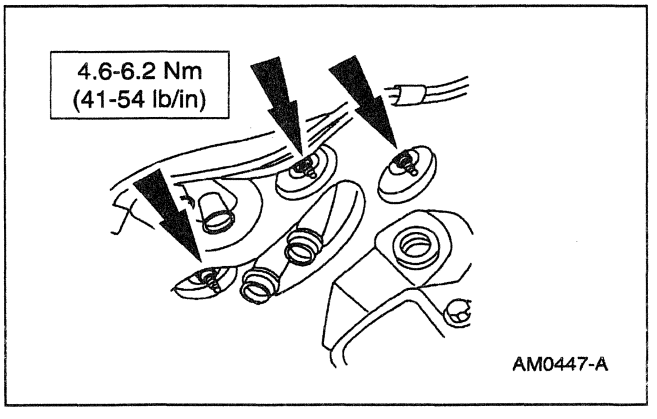

Ford Licensed Product
Ford Motor Company

REMOVAL AND INSTALLATION (Continued)

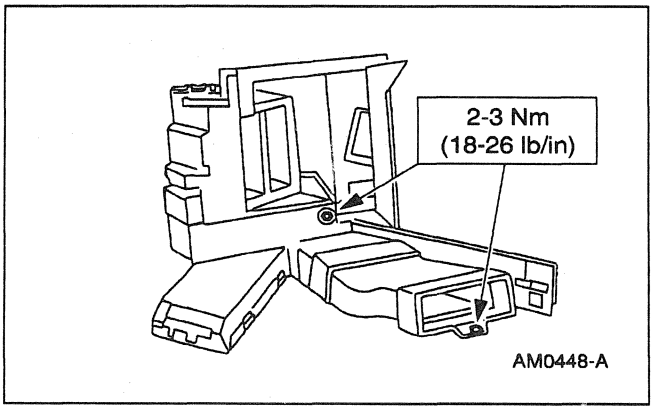

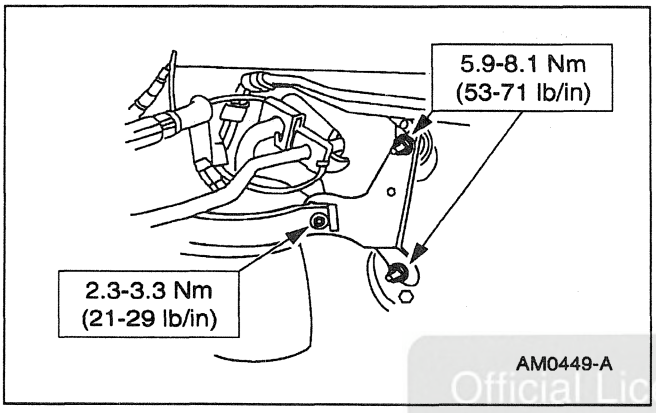

Official Licensed Product
Ford Motor Company

Heater Core

Removal

1. Remove the evaporator core housing; refer to Evaporator Core Housing in this section.
2. Disassemble the evaporator core housing to remove the heater core (18476); refer to Evaporator Core Housing in this section.

Installation

1. Follow the removal procedure in reverse order.

DISASSEMBLY AND ASSEMBLY

Evaporator Core Housing

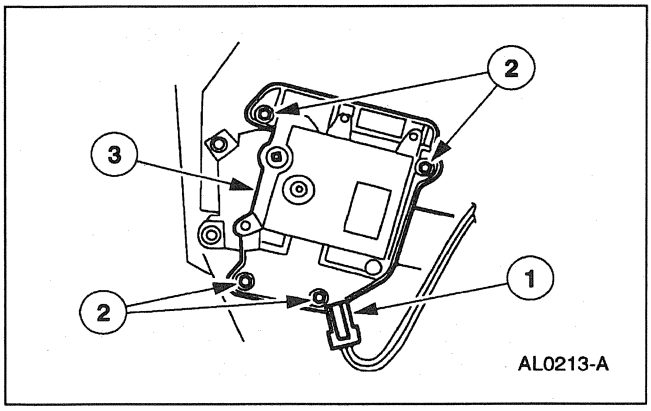

1. Remove the A/C electric blend door actuator.
   1 Disconnect the wire harness connector.
   2 Remove the screws.
   3 Remove the A/C electric blend door actuator.

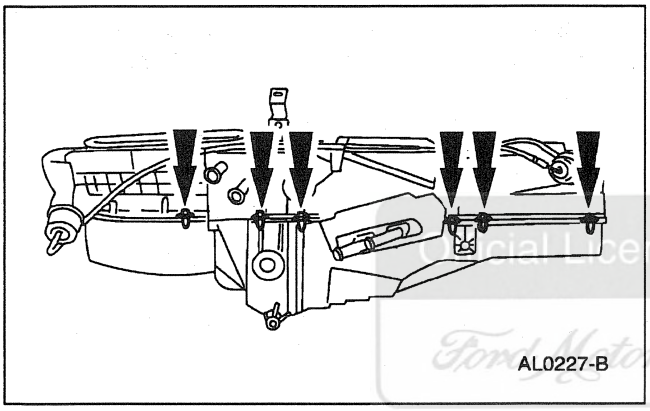

2. Remove 13 evaporator case screws.

Official Licensed Product
Ford Motor Company

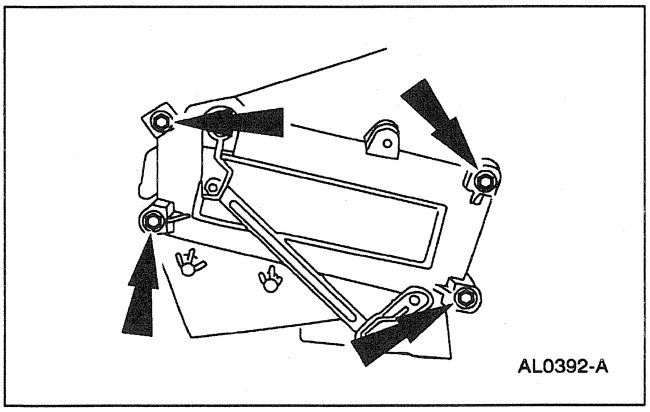

3. Remove the heater core cover screws.

DISASSEMBLY AND ASSEMBLY (Continued)

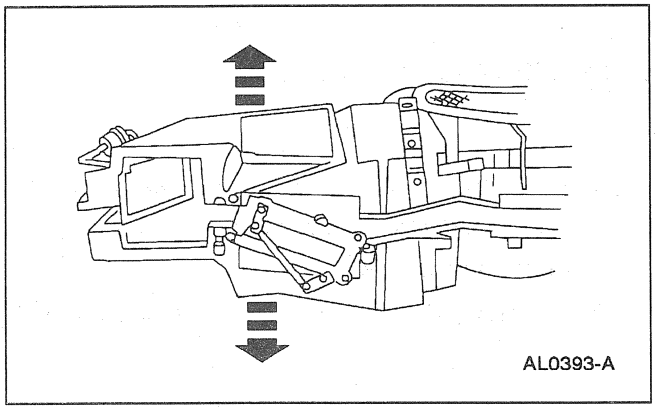

4. ⚠ **CAUTION: Do not attempt to bend any part of the levers. They are brittle and will break.**

   Lift the upper evaporator case half from the lower case half.

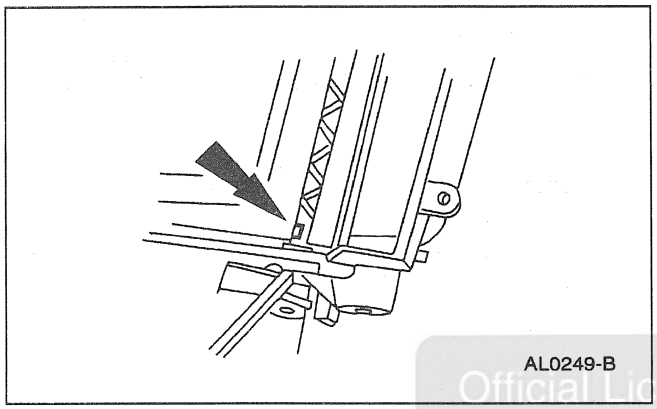

5. ⚠ **CAUTION: Do not attempt to bend any part of the levers. They are brittle and will break.**

   Depress the locking ramp to disengage the levers from the A/C air temperature control doors.

Official Licensed Product
Ford Motor Company

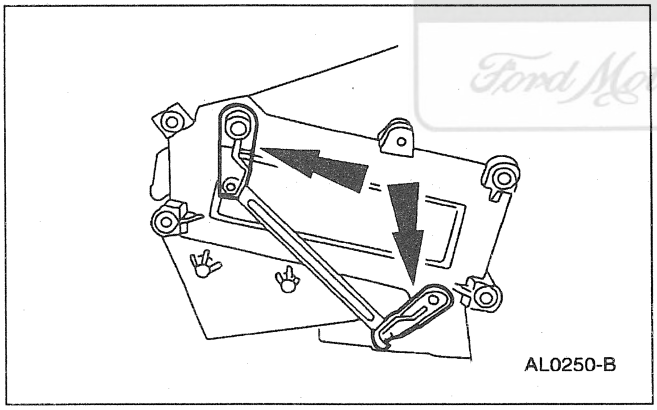

6. Remove the levers from the control door ends.

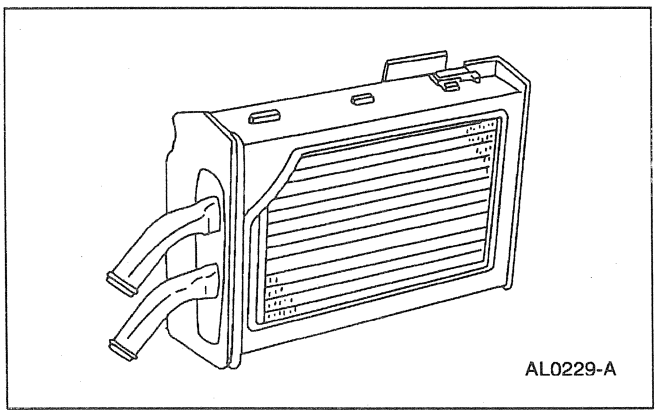

7. Remove the heater core (18476) from the A/C evaporator housing (19850).

DISASSEMBLY AND ASSEMBLY (Continued)

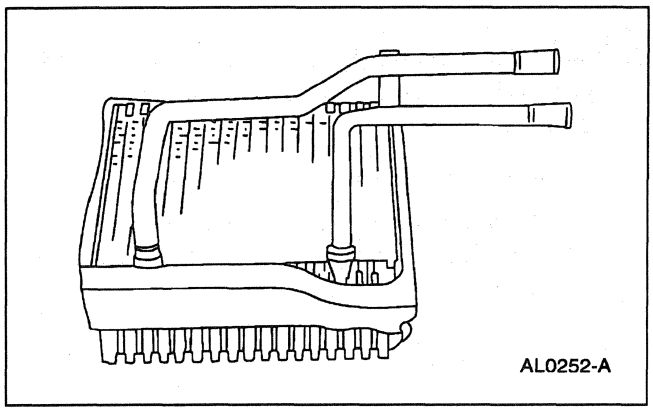

8. Remove the A/C evaporator core (19860) from the A/C evaporator housing.

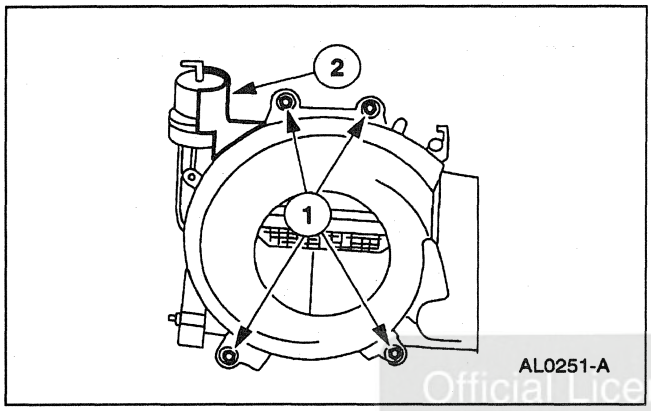

9. Remove the A/C recirculating air duct (19C590).
   1 Remove the screws.
   2 Remove the A/C recirculating air duct from the A/C evaporator housing.

Official Licensed Product
Ford Motor Company

Assembly

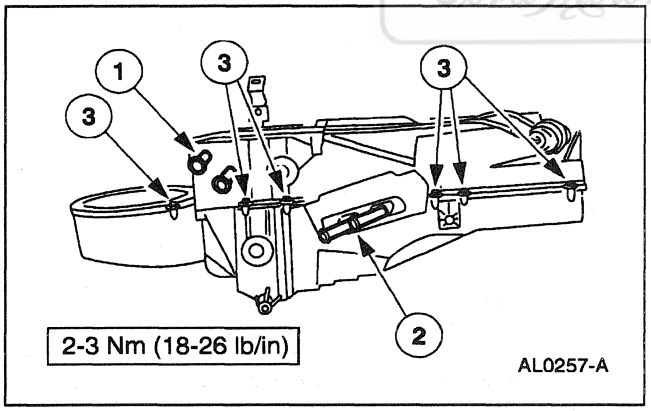

1. Assemble the upper evaporator case half to the lower case half.
   1 Install the A/C evaporator core into the lower case.
   2 Install the heater core into the lower case.
   3 Install the upper case half and the screws.

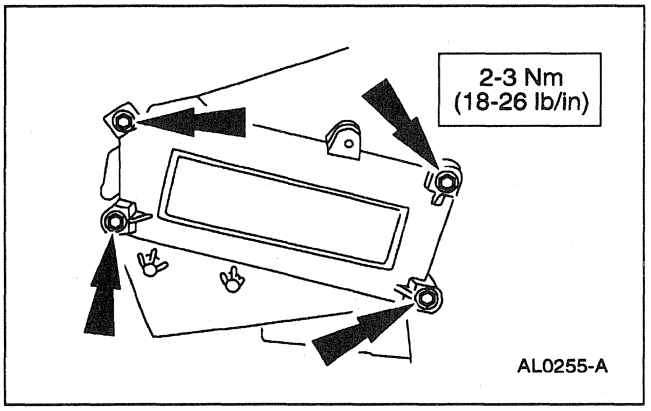

2. Install the heater core cover.

DISASSEMBLY AND ASSEMBLY (Continued)

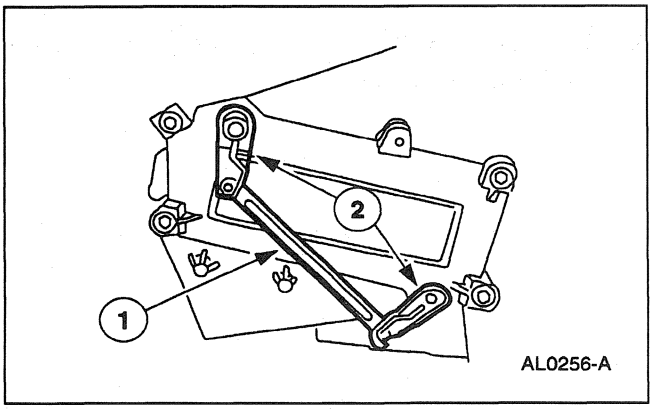

3. ⚠ **CAUTION: Do not attempt to bend any part of the levers. They are brittle and will break.**
   1 Install both levers onto the metal link.
   2 Simultaneously engage both levers into the A/C air temperature control door ends and snap into place.

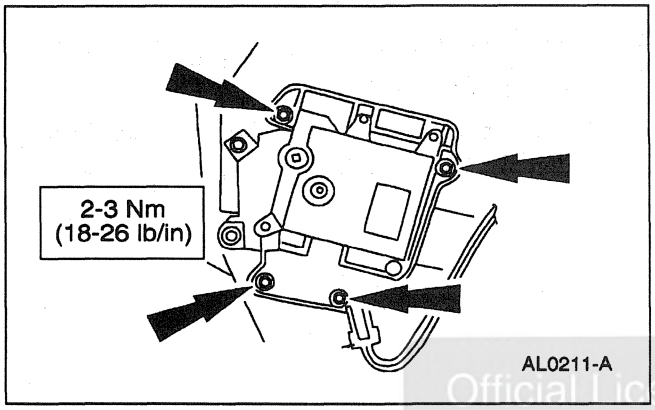

4. Install the A/C electronic blend door actuator.

Official Licensed Product
Ford Motor Company

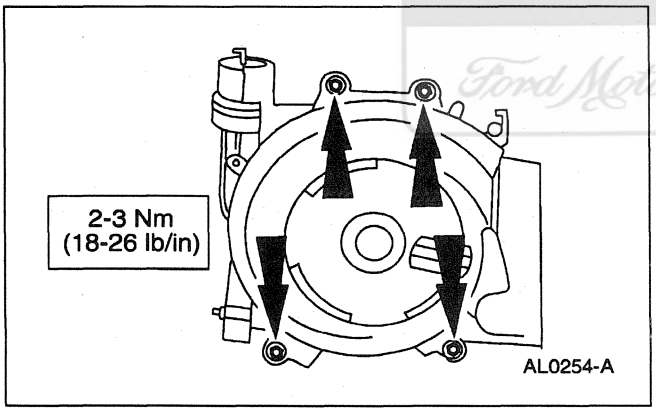

5. Install the A/C recirculating air duct.

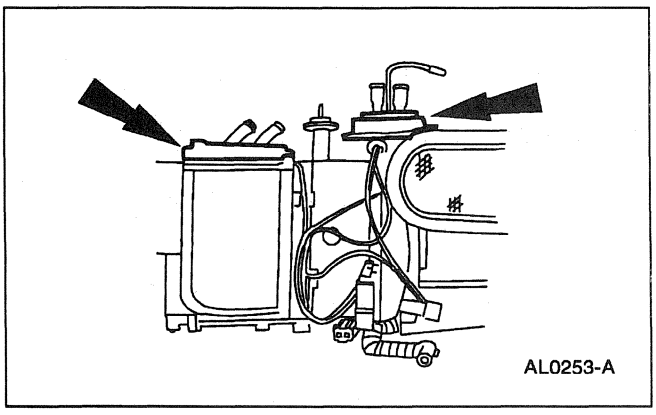

6. Install the evaporator core and the heater core seals.

SPECIFICATIONS

Torque Specifications

Description	Nm	Lb/In
Blower Motor Screws	2-3	18-26
Evaporator Housing Screws	2-3	18-26
Heater Core Cover Screws	2-3	18-26
Evaporator Housing Mounting Bracket to Cowl Screw	4.6-6.2	41-54
Evaporator Housing to Cowl Nuts	4.6-6.2	41-54
Heater Outlet Floor Duct Screws	2-3	18-26

(Continued)

Torque Specifications

Description	Nm	Lb/In
Suction Accumulator/Drier Clamp Screw	2.3-3.3	21-29
Accumulator Mounting Bracket to Cowl Nuts	5.9-8.1	53-71
A/C Electric Blend Door Actuator Screws	2-3	18-26
A/C Recirculating Air Duct Screws	2-3	18-26

Official Licensed Product
Ford Motor Company

SECTION 412-03 Air Conditioning

VEHICLE APPLICATION: Mark VIII

SUBJECT	PAGE
DESCRIPTION AND OPERATION	
A/C System	412-03-2
DIAGNOSIS AND TESTING	
Air Conditioning	412-03-9
REMOVAL AND INSTALLATION	
A/C Cycling Switch	412-03-27
Clutch and Clutch Field Coil	412-03-13
Compressor	412-03-9
Condenser Core	412-03-29
Evaporator Core	412-03-21
Evaporator Core Orifice	412-03-22
Line — Compresssor to Condenser Discharge	412-03-37
Line — Condenser to Evaporator	412-03-33
Line — Evaporator to Compressor Suction	412-03-35
Manifold and Tube Assembly	412-03-32
Pressure Relief Valve	412-03-29
Pressure Transducer	412-03-28
Shaft Seal	412-03-17
Suction Accumulator/Drier	412-03-24
SPECIFICATIONS	412-03-39

Official Licensed Product
Ford Motor Company

DESCRIPTION AND OPERATION

A/C System

The A/C refrigerant system is a clutch cycling orifice tube type. The system components are:

- A/C compressor (19703).
- A/C clutch (2884).
- A/C condenser core (19712).
- A/C evaporator core (19860).
- suction accumulator/drier (19C836).
- connecting refrigerant lines.

The refrigeration system operation is controlled by the:

- A/C evaporator core orifice (19D990).
- A/C cycling switch (19E561).
- A/C compressor pressure relief valve (19D644).
- A/C pressure transducer.

The refrigerant system incorporates an A/C compressor controlled by an A/C cycling switch.

The A/C cycling switch senses A/C evaporator core pressure to control A/C compressor operation.

An A/C compressor pressure relief valve is installed in the A/C manifold and tube (19D734) to protect the refrigerant system against excessively high refrigerant pressures.

An A/C evaporator core orifice is installed in the condenser to evaporator tube (19835) to meter the liquid refrigerant into the A/C evaporator core.

Component Locations

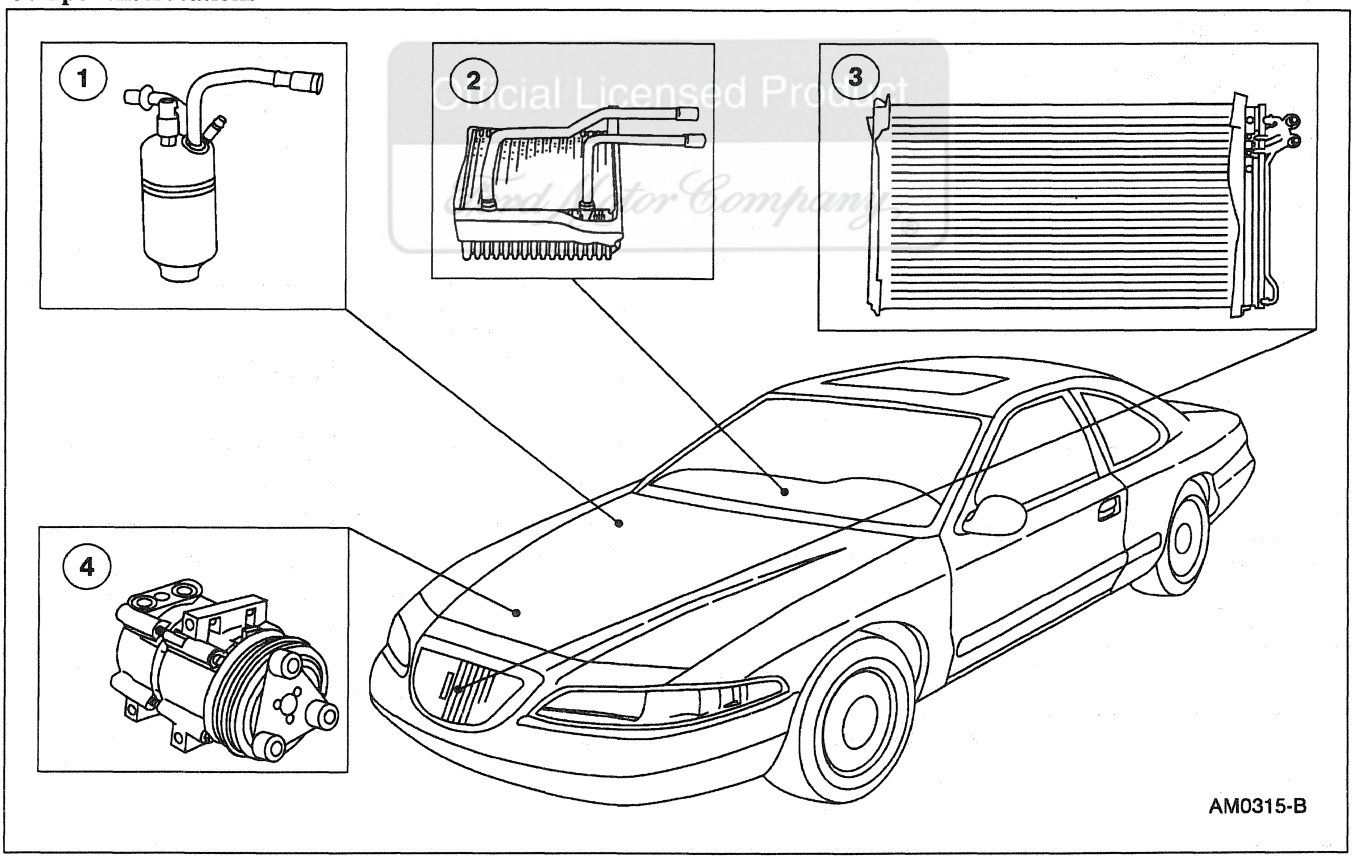

DESCRIPTION AND OPERATION (Continued)

Item	Part Number	Description
1	19C836	Suction Accumulator/Drier
2	19860	A/C Evaporator Core
3	19712	A/C Condenser Core
4	19703	A/C Compressor

(Continued)

Refrigeration Components

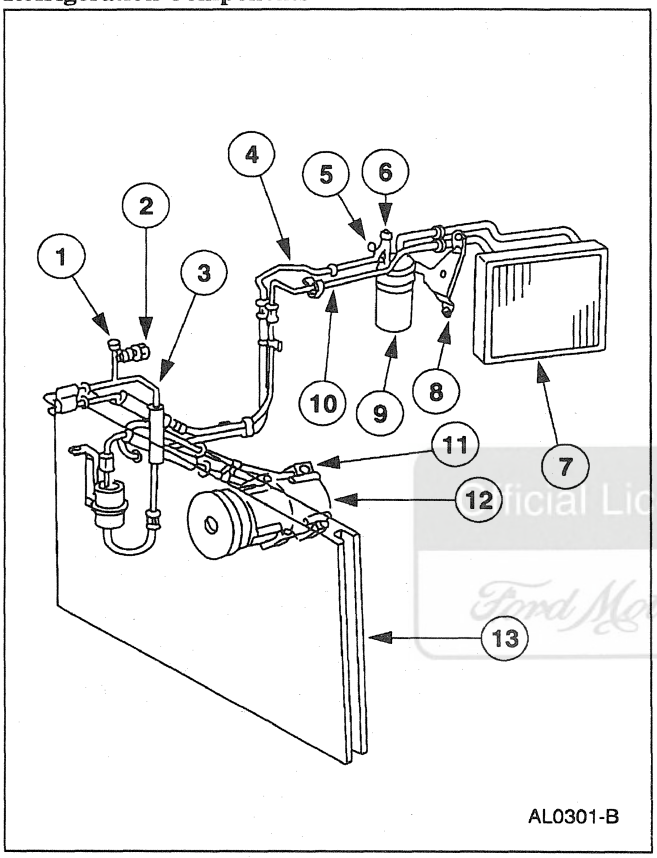

Item	Part Number	Description
1	19E762	A/C Charge Port Valve (High Side)
2	19D594	A/C Pressure Transducer
3	19972	A/C Compressor to Condenser Discharge Line
4	19D742	Evaporator to Compressor Suction Line
5	19E762	A/C Charge Port Valve (Low Side)
6	19E561	A/C Cycling Switch
7	19860	A/C Evaporator Core
8	19D606	A/C Accumulator Bracket
9	19C836	Suction Accumulator/Drier
10	19835	Condenser to Evaporator Tube
11	19D734	A/C Manifold and Tube
12	19703	A/C Compressor
13	19712	A/C Condenser Core

(Continued)

A/C Compressor and Clutch Assembly

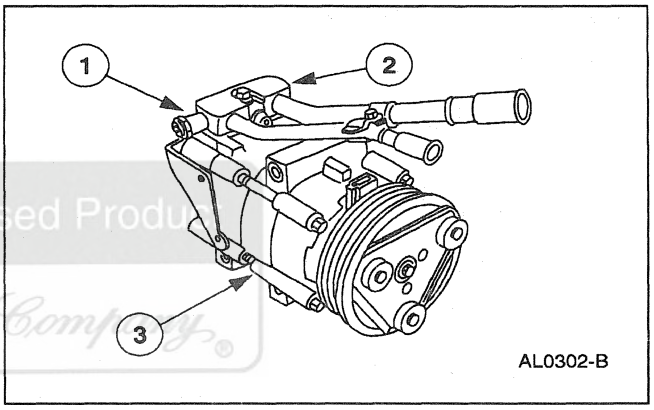

Item	Part Number	Description
1	19D644	A/C Compressor Pressure Relief Valve
2	19D734	A/C Manifold and Tube
3	19703	A/C Compressor

NOTE: Internal A/C compressor components are not serviced separately. The FS-10 A/C compressor is serviced only as an assembly. The A/C clutch, A/C clutch pulley (2E884), A/C clutch field coil (2987) and the shaft seal are serviceable.

NOTE: Whenever the A/C compressor is replaced, also replace the suction accumulator/drier and the A/C evaporator core orifice.

The FS-10 A/C compressor has the following characteristics:

- A ten-cylinder swashplate design utilizing the tangential design mount.
- Displacement of 170 cc (10.4 cubic inch)

Official Licensed Product
Ford Motor Company

DESCRIPTION AND OPERATION (Continued)

- A one-piece lip-type seal (replaceable from the front of the A/C compressor) is used to seal it at the shaft opening in the assembly.
- Five double-acting pistons operate within the cylinder assembly. The pistons are actuated by a swashplate that changes the rotating action of the shaft to a reciprocating force.
- Reed-type discharge valves are located between the cylinder assembly and the head at each end of the A/C compressor.
- The A/C compressor uses Motorcraft Refrigerant Oil YN-12b or equivalent meeting Ford specification WSH-M1C231-B. This oil contains special additives required for the A/C compressor .
- The A/C compressor oil from vehicles equipped with an FS-10 A/C compressor may have a dark color while maintaining a normal oil viscosity. This is normal for this A/C compressor because carbon from the piston rings will discolor the oil.

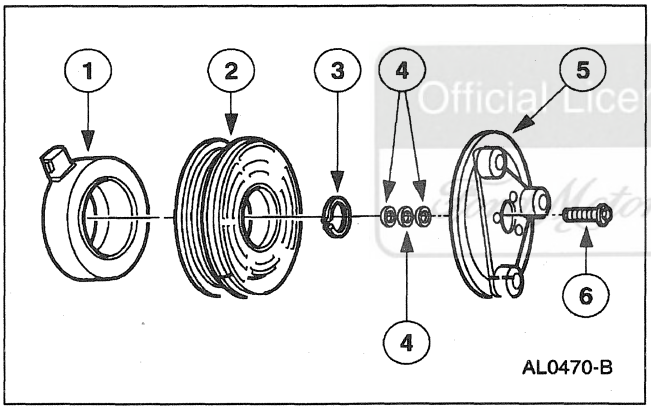

Item	Part Number	Description
1	2987	A/C Clutch Field Coil
2	2E884	A/C Clutch Pulley
3	N805338-S2	Pulley Snap Ring
4	19D648	A/C Clutch Hub Spacer
5	2884	A/C Clutch
6	N805332-S2	A/C Clutch Bolt

The magnetic A/C clutch has the following characteristics:

- It drives the compressor shaft.
- When battery positive voltage (B+) is applied to the A/C clutch field coil, the clutch disc and hub assembly is drawn toward the A/C clutch pulley.
- The magnetic force locks the clutch disc and hub assembly and the A/C clutch pulley together as one unit, causing the compressor shaft to rotate.
- When B+ is removed from the A/C clutch field coil, springs in the clutch disc and hub assembly move the clutch plate away from the A/C clutch pulley.

A/C Compressor Pressure Relief Valve

An A/C compressor pressure relief valve has been incorporated in the compressor A/C manifold and tube to:

- relieve unusually high refrigerant system discharge pressure buildups, (3103 kPa [450 psi] and above).
- prevent damage to the A/C compressor and other system components.
- avoid total refrigerant loss by closing after the excessive pressure has been relieved.

A/C Condenser Core

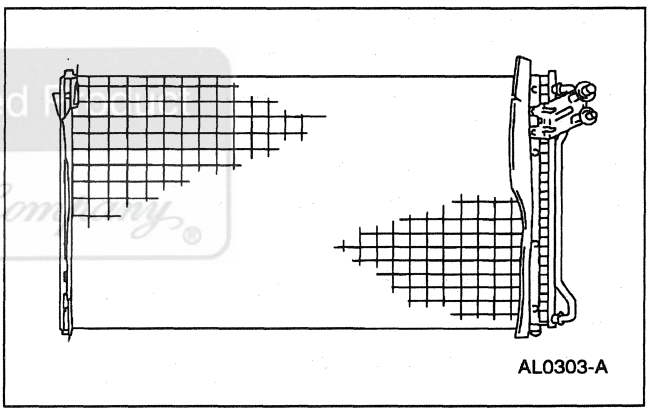

NOTE: Whenever an A/C condenser core is replaced, it is also necessary to replace the suction accumulator/drier .

The A/C condenser core has the following characteristics:

- It is an aluminum fin and tube design heat exchanger located in front of vehicle radiator (8005) .
- It cools compressed refrigerant gas by allowing air to pass over fins and tubes to extract heat and by condensing gas to liquid refrigerant as it is cooled.
- The A/C condenser core inlet and outlet connections have three O-ring seals and are the male fittings of a spring lock coupling.

DESCRIPTION AND OPERATION (Continued)

Refrigerant Lines

NOTE: Whenever a refrigerant line is replaced, it is also necessary to replace the suction accumulator/drier .

The A/C compressor to condenser discharge line (19972) contains high pressure refrigerant gas. It has the following features:

- an integral non-serviceable muffler.
- a fitting used to mount the A/C pressure transducer. A long-travel Schrader-type valve stem core is installed in the fitting so that the A/C pressure transducer can be removed without discharging the A/C system.
- a fitting used to mount a serviceable high-pressure A/C charge port valve.

The condenser to evaporator tube contains the A/C evaporator core orifice. When the A/C system is in operation:

- high pressure liquid refrigerant exists upstream of the A/C evaporator core orifice.
- low pressure liquid refrigerant exists downstream of the A/C evaporator core orifice.

The A/C manifold and tube is attached to the A/C compressor with O-ring seals and has the following features:

- the upstream side contains low pressure refrigerant gas.
- the downstream side contains high pressure refrigerant gas.

A/C Evaporator Core Orifice

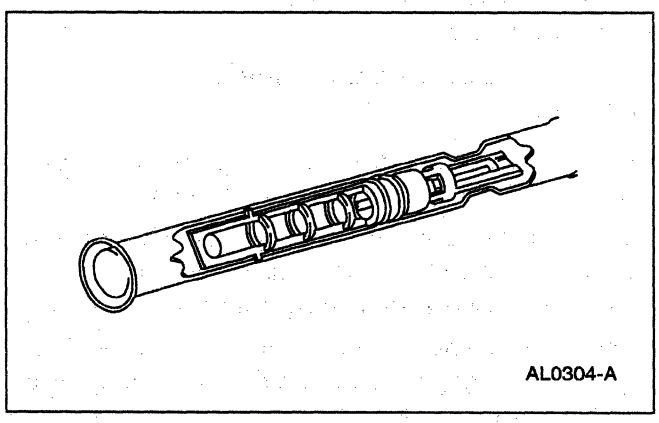

NOTE: The A/C evaporator core orifice should be replaced whenever an A/C compressor is replaced.

The A/C evaporator core orifice has the following characteristics:

- color-coded orange
- has an orifice diameter of 1.45 mm (0.057 inch)
- is located in the condenser to evaporator tube
- has filter screens located on the inlet and outlet ends of the tube body
- The inlet filter screen acts as a strainer for the liquid refrigerant flowing through the A/C evaporator core orifice.
- O-rings on the A/C evaporator core orifice prevent the high-pressure liquid refrigerant from by-passing the A/C evaporator core orifice.
- Adjustment or service cannot be made to the A/C evaporator core orifice assembly. It must be replaced as a unit.

Official Licensed Product
Ford Motor Company

DESCRIPTION AND OPERATION (Continued)

Suction Accumulator/Drier

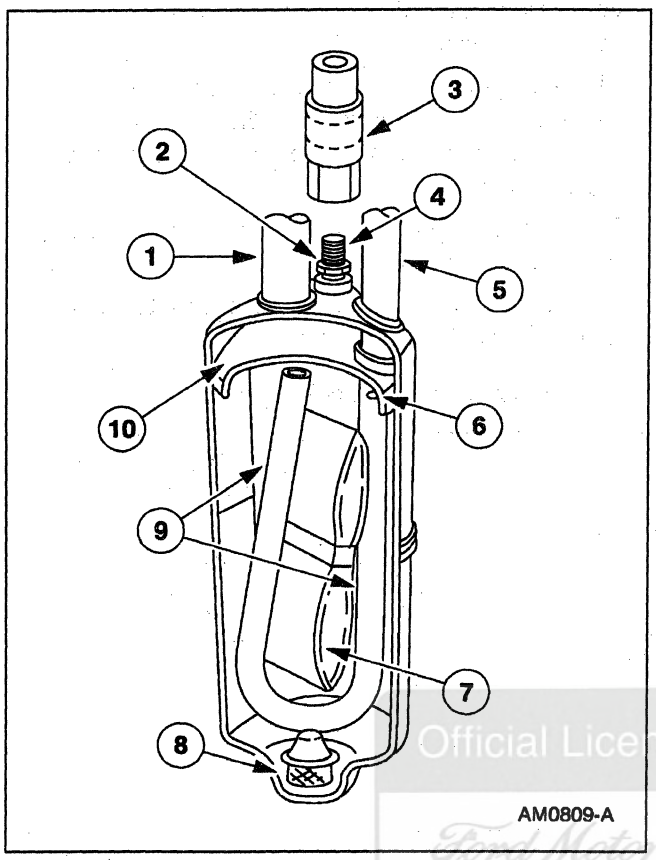

Item	Part Number	Description
1	—	Inlet From A/C Evaporator Core (Part of 19C836)
2	—	O-Ring Seal (Part of 19C836)
3	19E561	A/C Cycling Switch
4	—	A/C Cycling Switch Fitting (Part of 19C836)
5	—	Outlet to A/C Compressor (Part of 19C836)
6	—	Anti-Siphon Hole (Part of 19C836)
7	—	Desiccant Bag (Part of 19C836)
8	—	Oil Return Orifice Filter (Part of 19C836)
9	—	Vapor Return Tube (Part of 19C836)
10	—	Suction Accumulator/Drier Dome (Part of 19C836)

NOTE: Replacement of the suction accumulator/drier is necessary any time a major component of the refrigerant system is replaced.

Major components include:

- A/C condenser core
- A/C compressor
- A/C evaporator core
- a refrigerant hose/line

An A/C evaporator core orifice or O-ring seal is not considered a major component but the A/C evaporator core orifice should be replaced whenever the A/C compressor is replaced for lack of performance.

In addition to the preceding condition, the suction accumulator/drier should also be replaced if one of the following conditions exist:

- The suction accumulator/drier is perforated.
- The refrigerant system has been opened to the atmosphere for a period of time longer than required to make a minor repair.
- There is evidence of moisture in the system such as internal corrosion of metal refrigerant lines or the refrigerant oil is thick and dark.

The suction accumulator/drier is mounted to the A/C accumulator bracket (19D606) to the right of the vehicle centerline. The inlet tube of the suction accumulator/drier is attached to the A/C evaporator core. The outlet tube attaches to the evaporator to compressor suction line (19D742).

After entering the inlet of the suction accumulator/drier , heavier oil-laden refrigerant contacts an internally mounted dome (which serves as an umbrella) and drips down onto the bottom of the canister.

- A small diameter oil bleed hole, in the bottom of the vapor return tube, allows the accumulated heavier liquid refrigerant and oil mixture to re-enter the compressor suction line at a controlled rate.
- As the heavier mixture passes through the small diameter liquid bleed hole, it has a second change to vaporize and recirculate through the A/C compressor without causing compressor damage due to slugging.

Official Licensed Product
Ford Motor Company

DESCRIPTION AND OPERATION (Continued)

- A fine mesh screened filter fits tightly around the bottom of the vapor return tube to filter out refrigerant system contaminant particles.
- A desiccant bag is mounted inside the canister to absorb any moisture which may be in the refrigerant system.
- A fitting located on the top of the suction accumulator/drier is used to attach the A/C cycling switch. A long-travel Schrader-type valve system core is installed in the fitting so that the A/C cycling switch can be removed without discharging the A/C system.
- A second fitting is used to mount a serviceable low-pressure A/C charge port valve.

A/C Cycling Switch

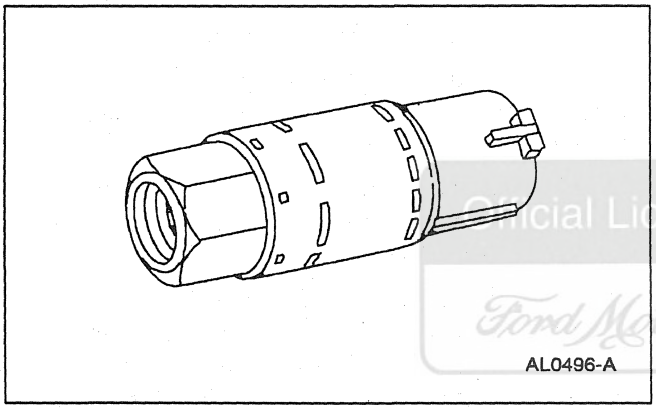

The A/C cycling switch is mounted on a Schrader valve-type fitting on the top of the suction accumulator/drier.

- A valve depressor, located inside the threaded end of the A/C cycling switch, presses in on the Schrader valve stem.
- This allows the suction pressure inside the suction accumulator/drier to control the operation of the A/C cycling switch.
- The electrical switch contacts open when the suction pressure drops to 152-193 kPa (22-28 psi).
- The contacts close when the suction pressure rises to 276-324 kPa (40-47 psi).
- When the A/C cycling switch contacts close, the signal to energize the A/C clutch is sent to the powertrain control module through the electronic automatic temperature control module.
- When the A/C cycling switch contacts open, the A/C clutch field coil is deenergized and compressor operation stops.
- The A/C cycling switch will control the A/C evaporator core pressure at a point where the plate/fin surface temperature will be maintained slightly above freezing.
- This prevents icing of the A/C evaporator core and blockage of airflow.
- It is not necessary to discharge the refrigerant system to remove the A/C cycling switch.

A/C Pressure Transducer

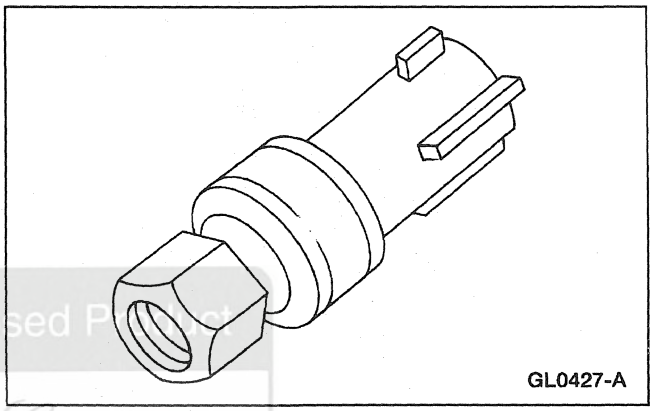

The A/C pressure transducer is mounted on a Schrader valve-type fitting on the A/C compressor to condenser discharge line.

- A valve depressor, located inside the threaded end of the A/C pressure transducer, presses in on the Schrader valve stem.
- This allows the compressor discharge pressure to be monitored by the powertrain control module.
- The A/C pressure transducer provides a voltage signal that is proportional to the A/C compressor discharge pressure.
- The powertrain control module uses this information for A/C clutch control, cooling fan control and idle speed control.
- It is not necessary to discharge the refrigerant system to remove the A/C pressure transducer.

Official Licensed Product
Ford Motor Company

DESCRIPTION AND OPERATION (Continued)

Spring Lock Coupling

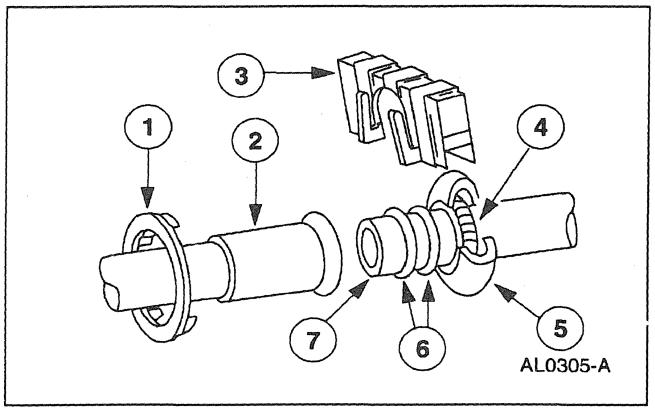

Item	Part Number	Description
1	—	Plastic Indicator Ring
2	—	Female Fitting
3	19E746	A/C Tube Lock Coupling Clip
4	19E576	A/C Tube Lock Coupling Spring
5	—	Cage
6	—	O-Ring Seals (3 Req'd for A/C Condenser Core, 2 Req'd for All Others)
7	—	Male Fitting

The spring lock coupling is a refrigerant line coupling held together by a garter spring inside a circular cage.

- When the coupling is connected together, the flared end of the female fitting slips behind the garter spring inside the cage of the male fitting.
- The garter spring and cage then prevent the flared end of the female fitting from pulling out of the cage.
- Three O-ring seals are used to seal between the two halves of the A/C condenser core couplings, all other couplings have two O-ring seals.
- These O-ring seals are green in color and are made of special material.
- Use only the green O-ring seals listed in the Ford Master Parts Catalog for the spring lock coupling.
- A plastic indicator ring is used on the spring lock couplings of the A/C evaporator core to indicate, during vehicle assembly, that the coupling is connected. Once the coupling is connected, the indicator ring is no longer necessary but will remain captive by the coupling near the cage opening.
- The indicator ring may also be used during service operations to indicate connection of the coupling.
- An A/C tube lock coupling clip (19E746) may be used to secure the coupling but is not required.

Service Gauge Port Valves

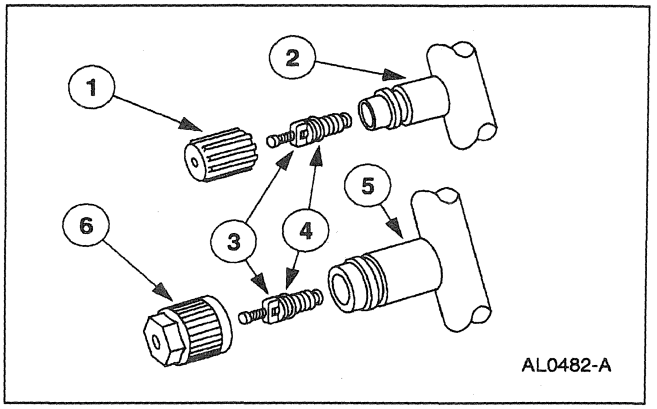

Item	Part Number	Description
1	19D702	A/C Charging Valve Cap
2	—	Low Pressure Service Gauge Port Valve
3	—	Schrader-Type Valve
4	—	O-Ring Seal
5	—	High Pressure Service Gauge Port Valve
6	19D702	A/C Charging Valve Cap

The high-pressure service gauge port valve is located on the A/C compressor to condenser discharge line.

The low pressure service gauge port valve is located on the suction accumulator/drier.

The fitting is an integral part of the refrigerant line or component.

- Special couplings are required for both the high side and low side service gauge ports.
- The Schrader-type valve core can be replaced if the seal leaks.
- Always install the A/C charging valve cap (19D702) on the service gauge port valves after repairing the refrigerant system.

Ford Motor Company Licensed Product

DIAGNOSIS AND TESTING

Air Conditioning

Refer to Section 412-00.

REMOVAL AND INSTALLATION

Compressor

Special Tool(s)

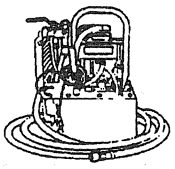 ST1459-A	A/C Flusher 014-00991 or equivalent (Part of 014-00990)

Removal

⚠ **CAUTION: When replacing an A/C compressor (19D629) which has failed internally, perform the following procedures to prevent contamination of the refrigerant system:**

- **If A/C Flusher is available, perform the Flushing procedure; refer to Section 412-00.**
- **If A/C Flusher is not available, perform the Refrigerant System Filtering after A/C Compressor Replacement procedure; refer to Section 412-00.**
- **Replace the suction accumulator/drier (19C836); refer to Suction Accumulator/Drier in this section.**
- **Replace the A/C evaporator core orifice (19D990); refer to Evaportative Core Orifice in this section.**

1. Recover the refrigerant; refer to Section 412-00.
2. Disconnect the battery ground cable (14301).

Official Licensed Reproduction Ford Motor Company

REMOVAL AND INSTALLATION (Continued)

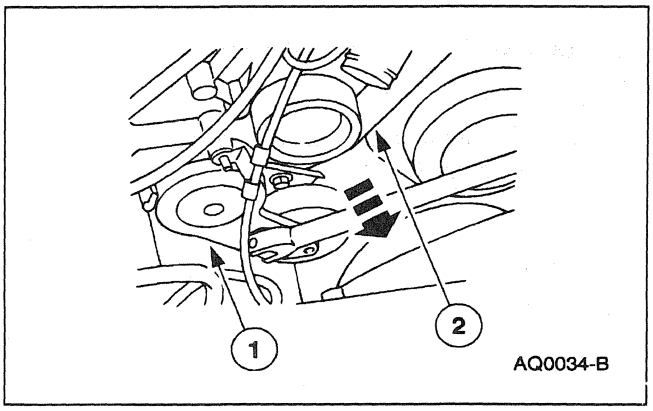

3. Disengage the drive belt (8620) from the A/C clutch pulley (2E884).
   1 Rotate the drive belt tensioner (6B209).
   2 Remove the drive belt.

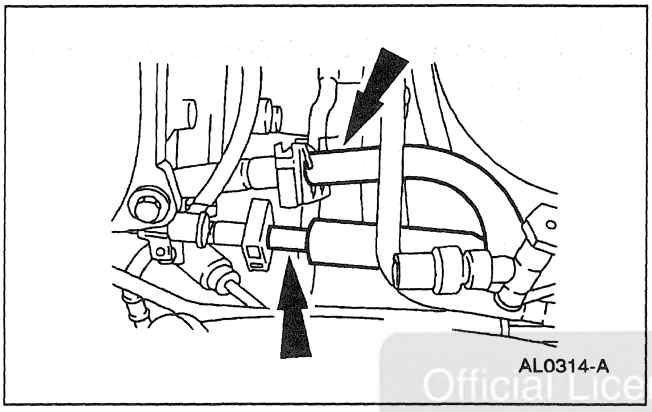

4. Disconnect the A/C compressor to condenser discharge line (19972) and the evaporator to compressor suction line (19D742) from the A/C manifold and tube (19D734) ; refer to the Spring Lock Couplings Disconnect and Connect procedure in Section 412-00.

Official Licensed Product
Ford Motor Company

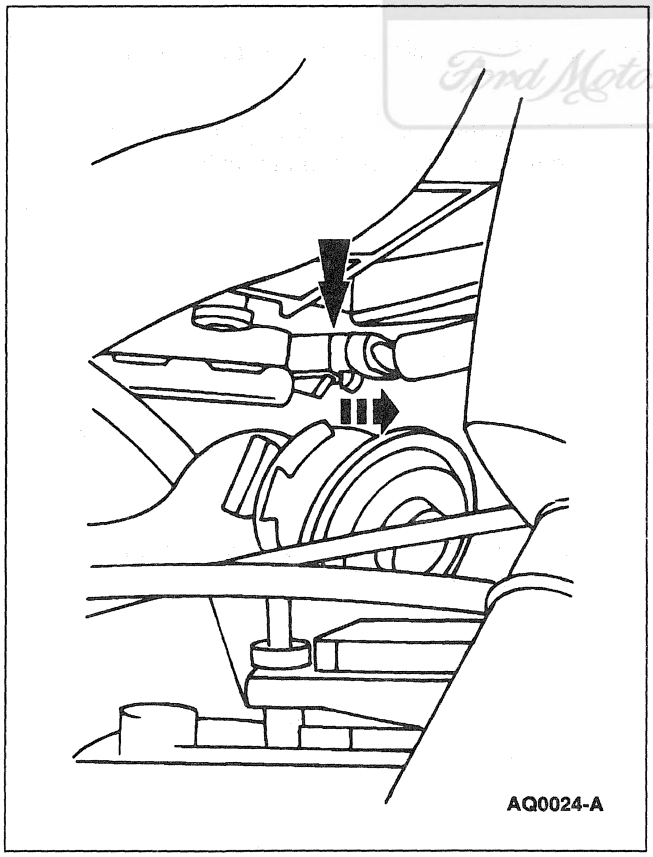

5. Disconnect the engine cooling fan motor wire harness connector.

REMOVAL AND INSTALLATION (Continued)

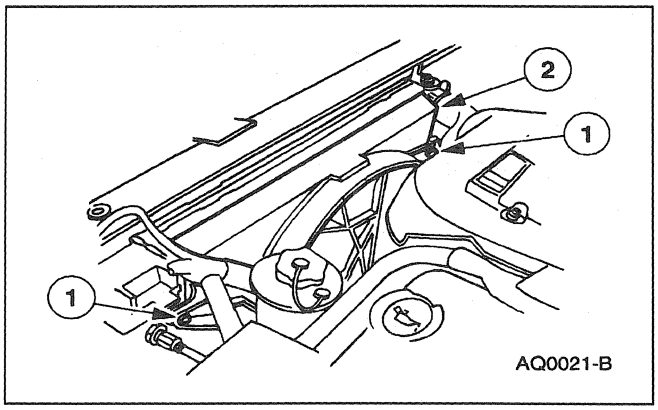

6. Remove the fan motor (8C607).
   1 Remove the bolts.
   2 Lift the fan motor off the mounts on the radiator (8005).

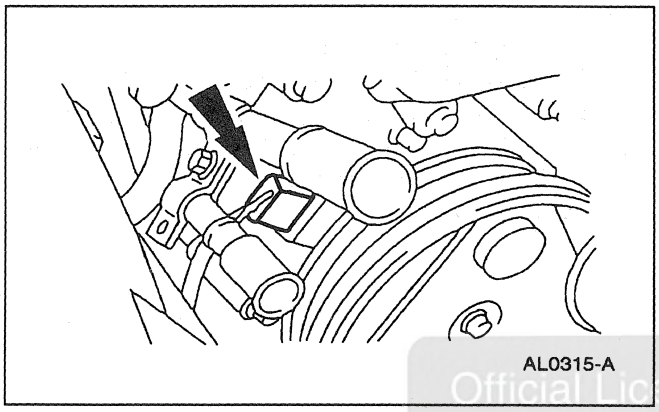

7. Disconnect the A/C clutch field coil wire harness connector.

Official Licensed Product
Ford Motor Company

8. Raise the vehicle; refer to Section 100-02.

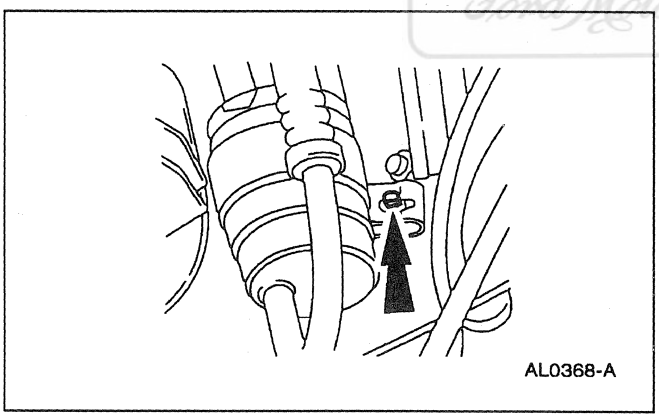

9. Remove the A/C compressor to condenser discharge line bracket clamping bolt.

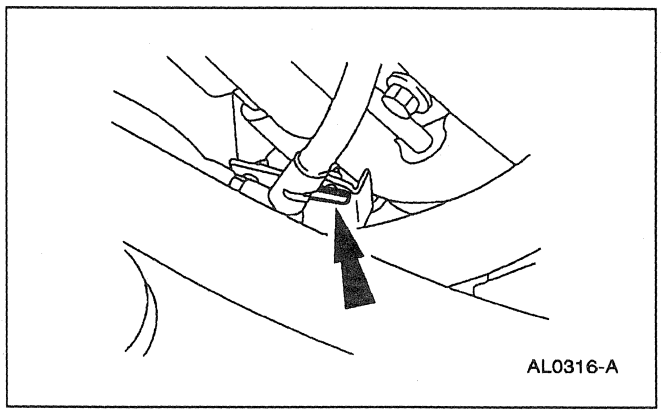

10. Disengage the wire harness retainer from the wiring bracket (14536).

REMOVAL AND INSTALLATION (Continued)

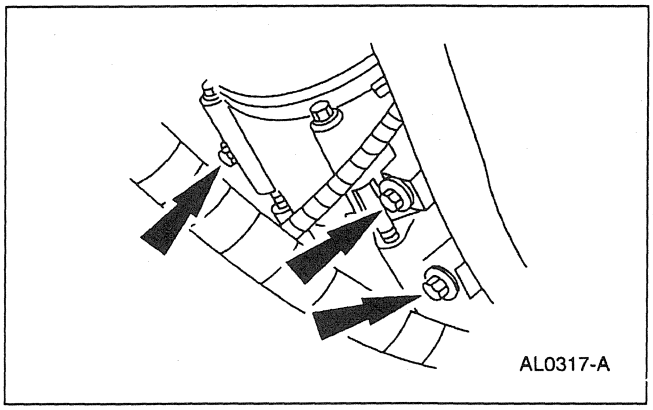

11. Remove the bolts from the A/C compressor (19703).

12. Lower the vehicle.

13. Remove the A/C compressor from the vehicle with the A/C manifold and tube attached.

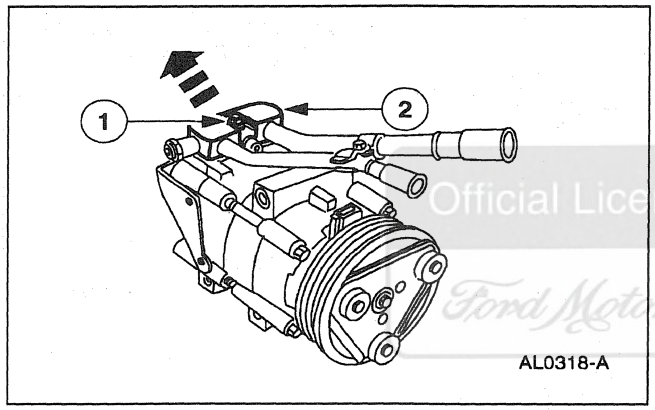

14. Remove the A/C manifold and tube from the A/C compressor.
    1 Loosen the bolt.
    2 Remove the A/C manifold and tube.

Official Licensed Product
Ford Motor Company

Installation

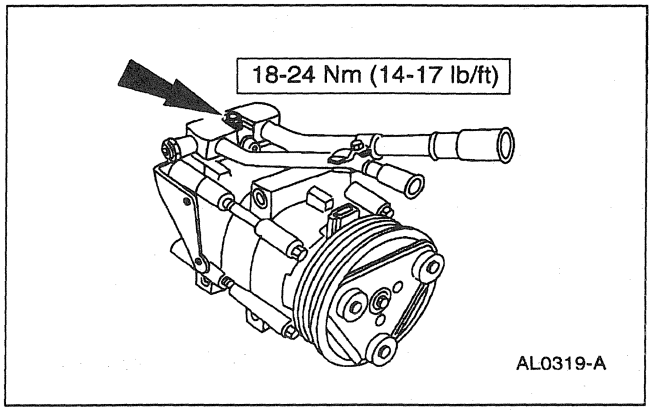

1. Follow the removal procedure in reverse order.
   - Service the replacement A/C compressor with the proper amount of Motorcraft Refrigerant Oil YN-12b or equivalent meeting Ford specification WSH-M1C231-B; refer to Section 412-00.
   - Lubricate the new A/C manifold O-ring seals with Motorcraft Refrigerant Oil YN-12b or equivalent meeting Ford specification WSH-M1C231-B.
   - Apply Pipe Sealant with Teflon® D8AZ-19554-A or equivalent meeting Ford specifications WSK-M2G350-A2 and ESR-M18P7-A to the threads of the A/C manifold retaining bolt.

REMOVAL AND INSTALLATION (Continued)

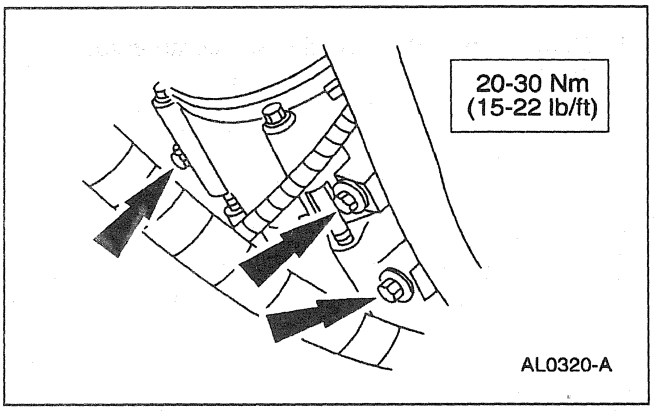

Clutch and Clutch Field Coil

Special Tool(s)

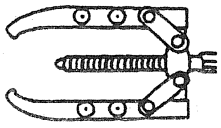 ST1260-A	2-Jaw Puller 205-D026 (D80L-1002-L) or equivalent
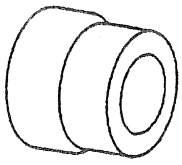 ST1232-A	Coil Pressing Tool 412-065 (T89P-19623-EH)
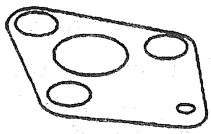 ST1235-A	Compressor Clutch Holding Tool 412-098 (T94P-19703-AH)

(Continued)

Special Tool(s)

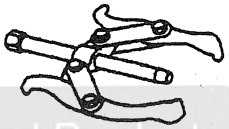 ST1220-A	Puller-Differential Side Bearing 205-116 (T77F-4220-B1)
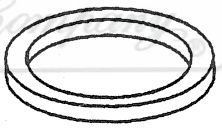 ST1234-A	Field Coil Replacer 412-078 (T91L-19623-CH)
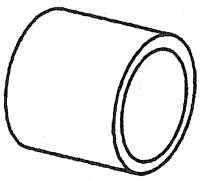 ST1233-A	Shaft Protector for Coil Removal 412-067 (T89P-19623-FH)

Official Licensed Product

Removal

1. Remove the A/C compressor (19703); refer to Compressor in this section.

REMOVAL AND INSTALLATION (Continued)

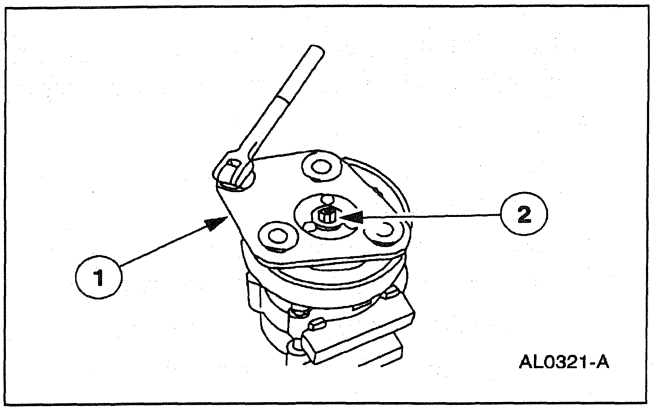

2. Remove the bolt.
   1 Hold the A/C clutch hub with the Compressor Clutch Holding Tool.
   2 Remove the bolt.

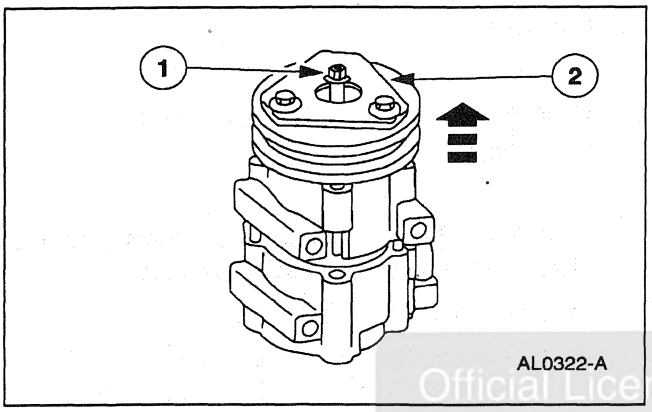

3. Remove the A/C clutch (2884) and the A/C clutch hub spacer (19D648).
   1 Thread an 8 x 1.25 mm bolt into the A/C clutch to force it from the compressor shaft.
   2 Lift the A/C clutch and the A/C clutch hub spacer from the compressor shaft.

Official Licensed Product
Ford Motor Company

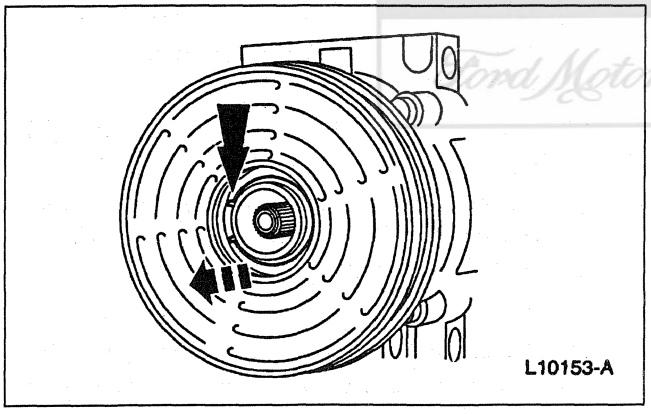

4. Remove the pulley snap ring.

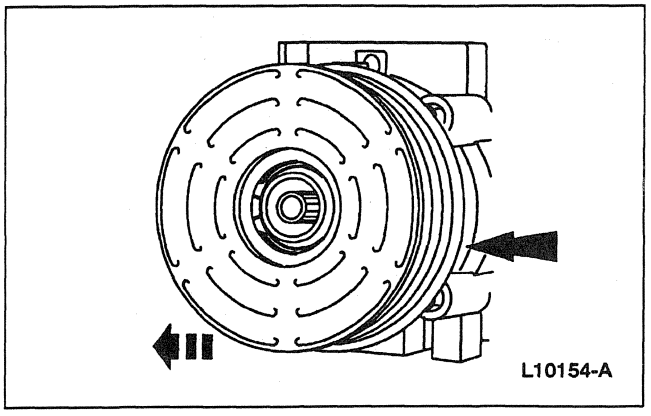

5. Remove the A/C clutch pulley (2E884) .

REMOVAL AND INSTALLATION (Continued)

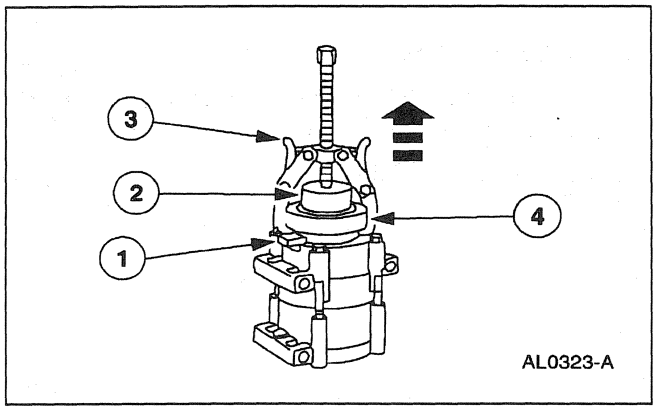

6. ⚠ **CAUTION: Do not use air tools. The A/C clutch field coil (2987) can be easily damaged.**

   Remove the A/C clutch field coil.

   1 Note the location of the A/C clutch field coil electrical connector.
   2 Install the Shaft Protector for Coil Removal on the nose opening of the A/C compressor.
   3 Install the Puller-Differential Side Bearing.
   4 Remove the A/C clutch field coil.

Installation

1. Clean the A/C clutch field coil and pulley mounting surfaces.

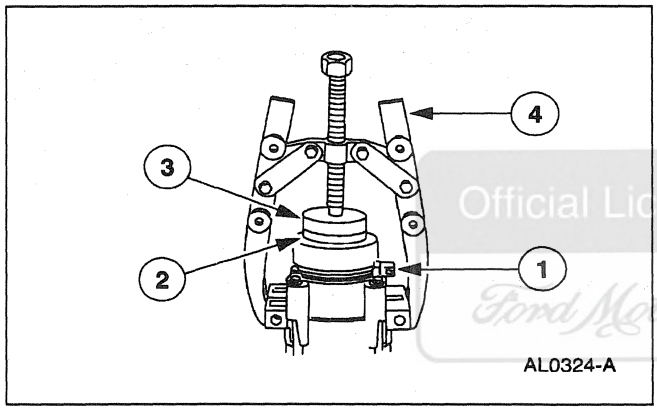

2. ⚠ **CAUTION: Do not use air tools. The A/C clutch field coil can be easily damaged.**

   Install the A/C clutch field coil.

   1 Place the A/C clutch field coil on the A/C compressor with the A/C clutch field coil electrical connector properly positioned.
   2 Place the Field Coil Replacer on the A/C clutch field coil.
   3 Place the Coil Pressing Tool on the Field Coil Replacer.
   4 Use the 2-Jaw Puller to install the A/C clutch field coil until bottomed completely against the A/C compressor.

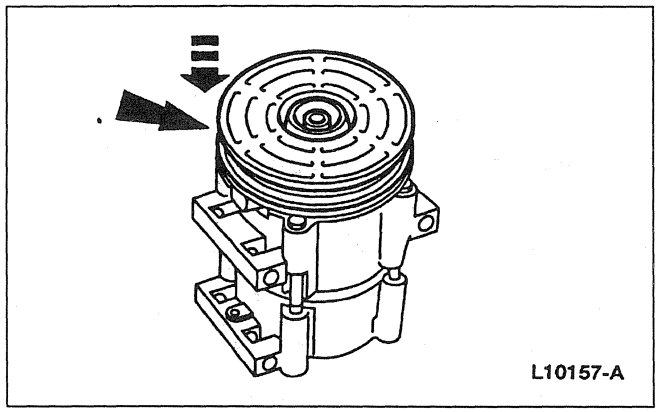

3. **NOTE:** The A/C clutch pulley is a tight fit on the A/C compressor head; it must be properly aligned during installation.

   Install the A/C clutch pulley.

Official Licensed Publication
Ford Motor Company

REMOVAL AND INSTALLATION (Continued)

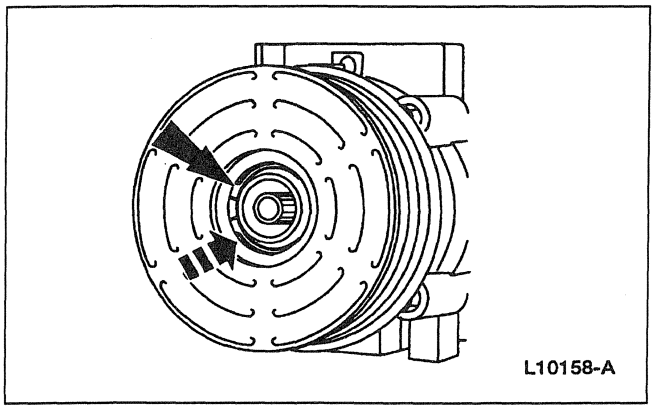

4. Install the pulley snap ring with the bevel side out.

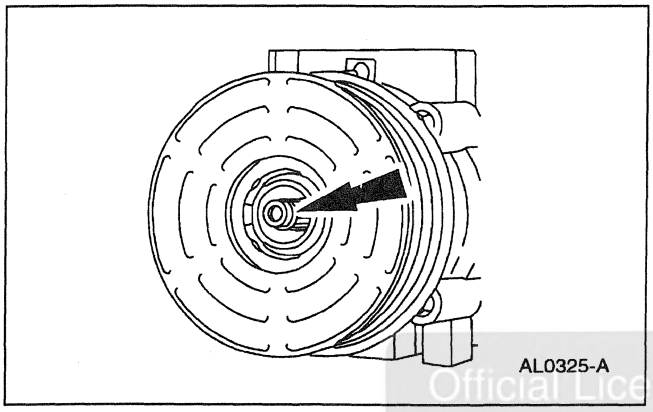

5. Place one nominal thickness A/C clutch hub spacer inside the clutch hub spline opening.

Official Licensed Product
Ford Motor Company

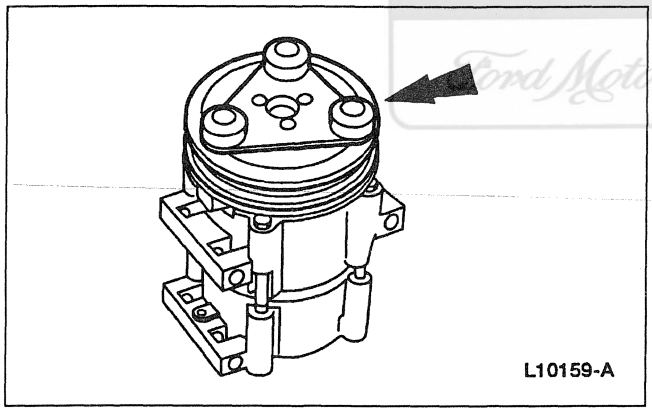

6. Install the A/C clutch.

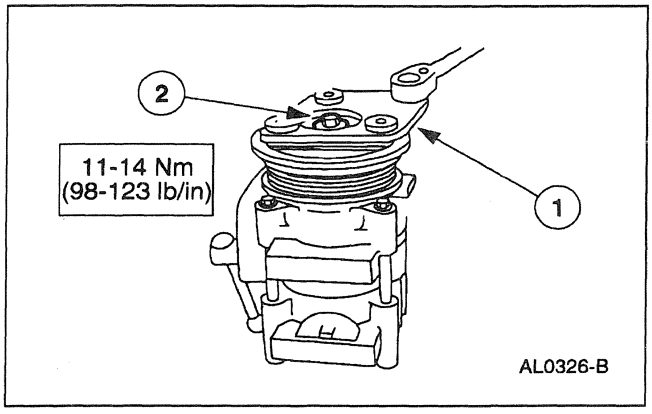

7. Install the A/C clutch hub retaining bolt.
   1 Hold the A/C clutch hub with the Compressor Clutch Holding Tool.
   2 Tighten the bolt.

REMOVAL AND INSTALLATION (Continued)

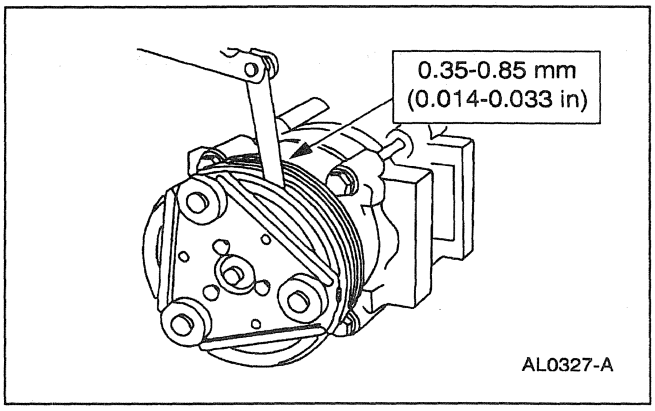

8. Measure and adjust the clutch air gap by removing or adding A/C clutch hub spacers.

9. Install the A/C compressor; refer to Compressor in this section.

Shaft Seal

Special Tool(s)

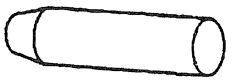 ST1230-A	Shaft Seal Protector 412-061 (T89P-19623-CH)
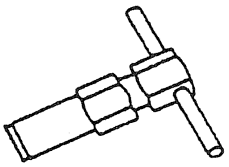 ST1229-A	Shaft Seal Remover 412-059 (T89P-19623-BH)
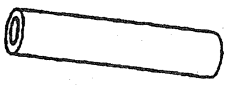 ST1228-A	Shaft Seal Replacer 412-058 (T89P-19623-AH)

(Continued)

Special Tool(s)

ST1231-A	Snap Ring Remover 412-063 (T89P-19623-DH)
ST1219-A	O-Ring Remover 100-010 (T71P-19703-C)

Official Licensed Product
Ford Motor Company

Removal

1. Remove the A/C clutch (2884) from the A/C compressor (19703); refer to Clutch and Clutch Field Coil in this section.

REMOVAL AND INSTALLATION (Continued)

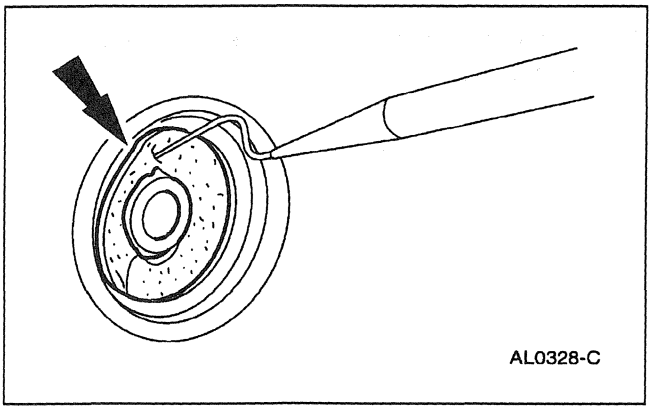

2. Remove the shaft seal felt from the nose of the A/C compressor with the O-Ring Remover.

3. Clean the compressor nose area.

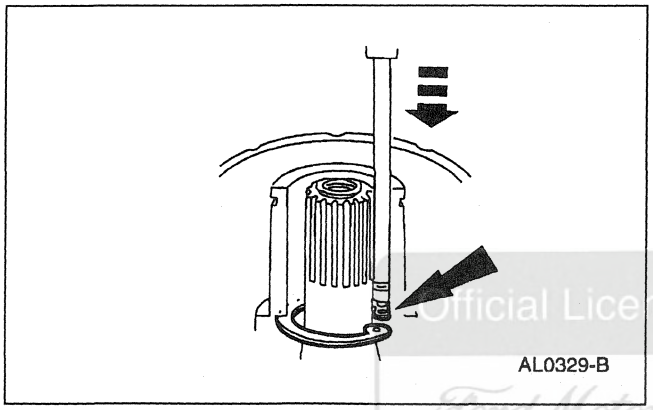

4. Insert the tip of the Snap Ring Remover into one of the snap ring eyes.

Official Licensed Product
Ford Motor Company

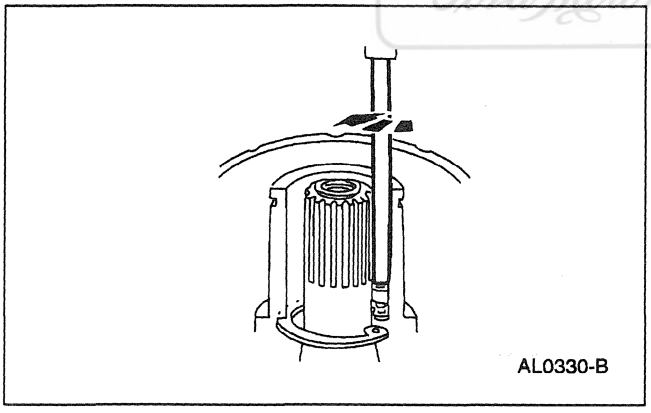

5. Rotate the Snap Ring Remover to position the tool tip and the snap ring eye closest to the A/C compressor shaft.

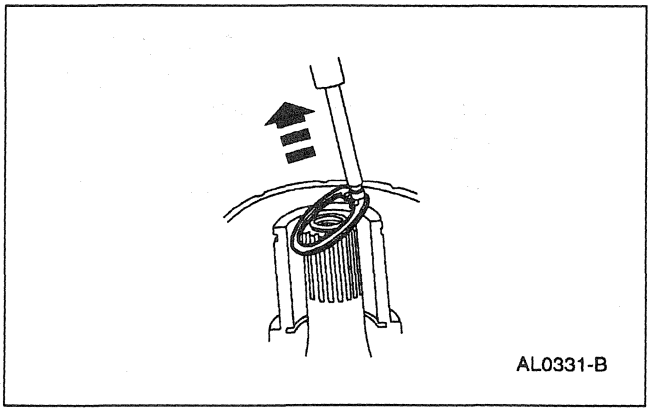

6. Pull the Snap Ring Remover up quickly while keeping the tool shaft against the side of the nose opening and remove the snap ring.

REMOVAL AND INSTALLATION (Continued)

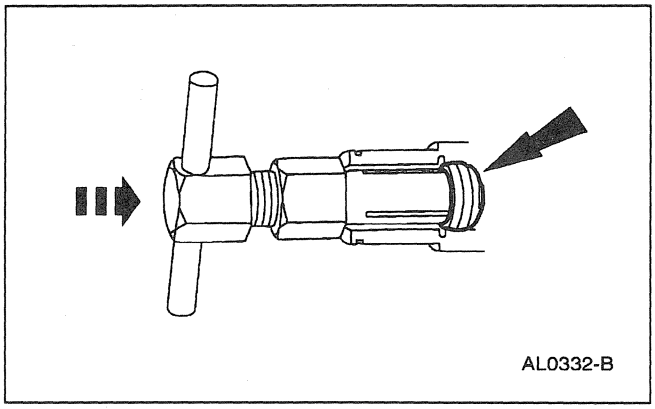
AL0332-B

7. Engage the Shaft Seal Remover into the inside diameter of the shaft seal.

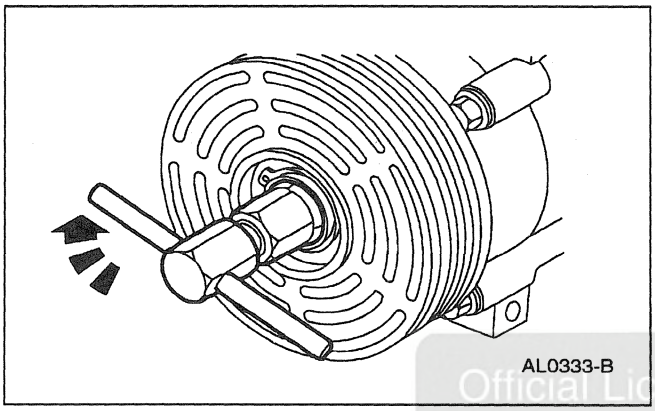
AL0333-B

8. Turn the tool handle clockwise to expand the tool tip inside of the shaft seal.

Official Licensed Product
Ford Motor Company

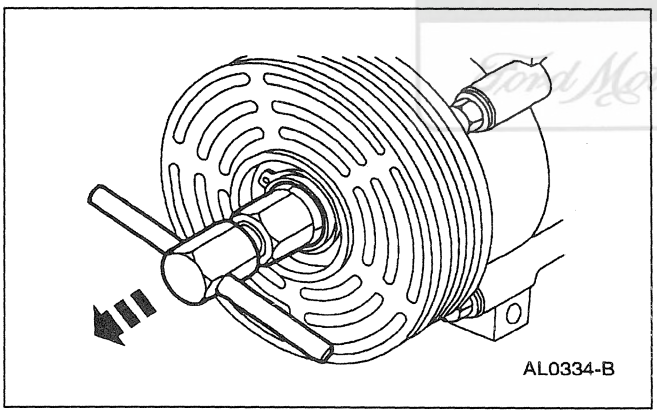
AL0334-B

9. Pull the seal from the A/C compressor.

Installation

1. **CAUTION: To prevent refrigerant system contamination; do not allow dirt or other foreign materials to enter the A/C compressor.**

   Clean the A/C compressor nose area.

REMOVAL AND INSTALLATION (Continued)

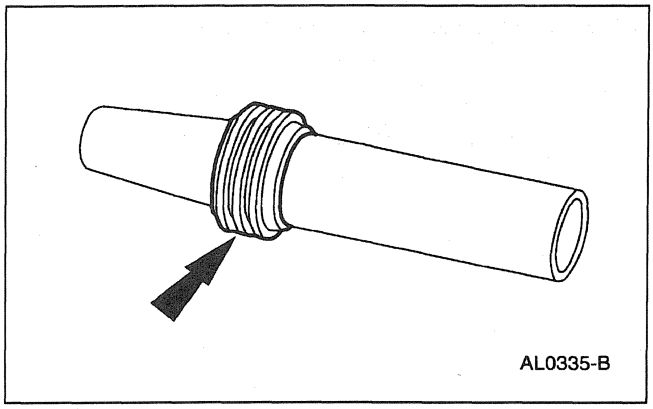

2. Place the shaft seal on the Shaft Seal Protector. Lubricate the shaft seal and the Shaft Seal Protector with Motorcraft Refrigerant Oil YN-12b or equivalent meeting Ford specification WSH-M1C231-B.

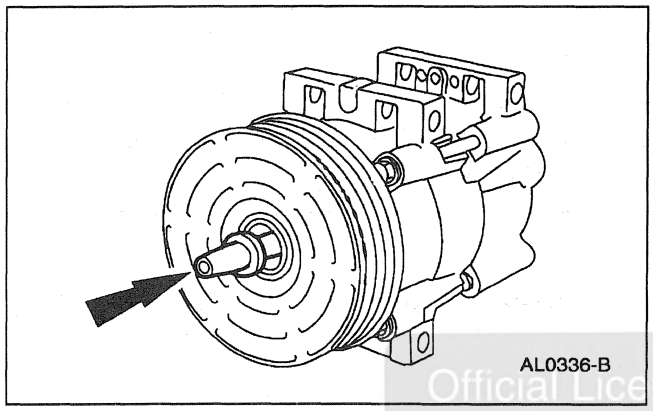

3. Position the shaft seal and the Shaft Seal Protector over the A/C compressor shaft.

Official Licensed Product
Ford Motor Company

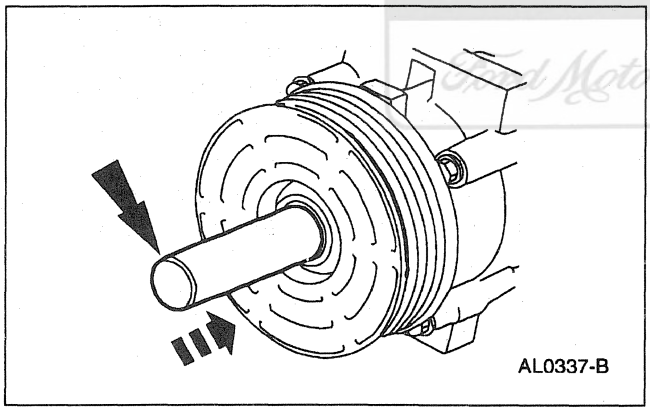

4. Push the shaft seal onto the A/C compressor shaft with the Shaft Seal Replacer until seated.

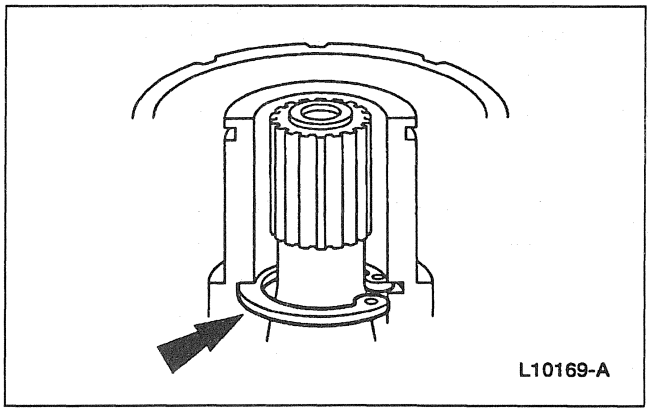

5. Install the shaft seal snap ring with the sharp edge facing up.

REMOVAL AND INSTALLATION (Continued)

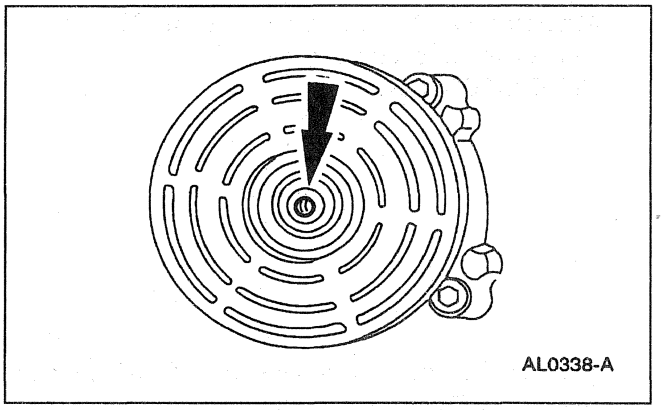

6. Perform the A/C compressor external leak test; refer to Section 412-00.
7. Install the shaft seal felt.
8. Install the A/C clutch; refer to Clutch and Clutch Field Coil in this section.

Evaporator Core

Removal

Official Licensed Product
Ford Motor Company

⚠ **CAUTION: To prevent refrigerant system contamination; if you are replacing the A/C evaporator core (19860), you must also replace the suction accumulator/drier (19C836).**

NOTE: If an A/C evaporator core leak is suspected, the A/C evaporator core must be leak tested before it is removed from the vehicle; refer to Section 412-00.

1. Remove the evaporator core housing; refer to Section 412-02.
2. Disassemble the evaporator core housing to remove the A/C evaporator core; refer to Section 412-02.

Installation

1. Follow the removal procedure in reverse order.

REMOVAL AND INSTALLATION (Continued)

Evaporator Core Orifice

Special Tool(s)

ST1223-A	Broken Orifice Tube Extractor 412-035 (T83L-19990-B)
ST1224-A	Fixed Orifice Tube Remover/Replacer 412-034 (T83L-19990-A)

Removal

1. Remove the condenser to evaporator tube (19835); refer to Line—Condenser to Evaporator in this section.
   - For a fixed orifice tube, perform Steps 2 and 3.
   - For a broken orifice tube, perform Steps 4 and 5.

Official Licensed Product
Ford Motor Company

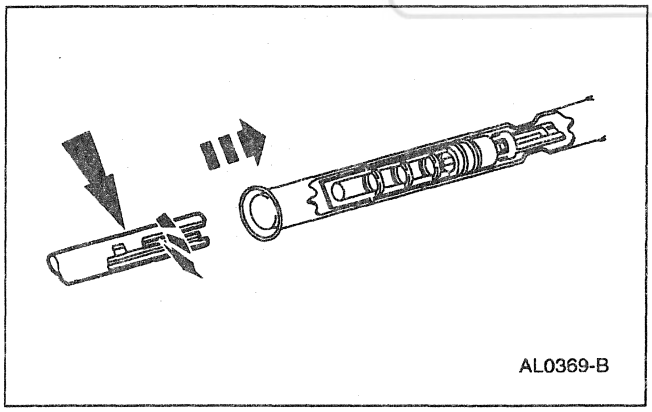
AL0369-B

2. Engage the Fixed Orifice Tube Remover/Replacer to the A/C evaporator core orifice (19D990).

REMOVAL AND INSTALLATION (Continued)

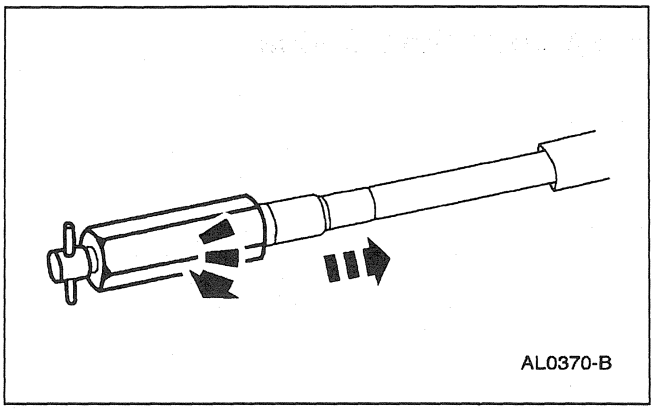

3. Hold the tool T-handle and turn the tool body to remove the A/C evaporator core orifice.

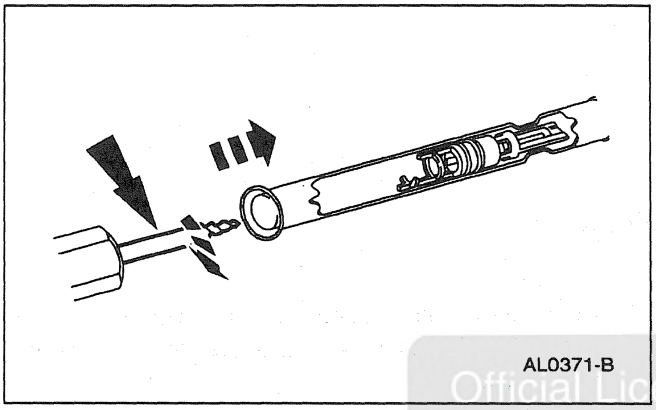

4. To remove a broken A/C evaporator core orifice; screw the end of the Broken Orifice Tube Extractor into the broken A/C evaporator core orifice.

Official Licensed Product
Ford Motor Company

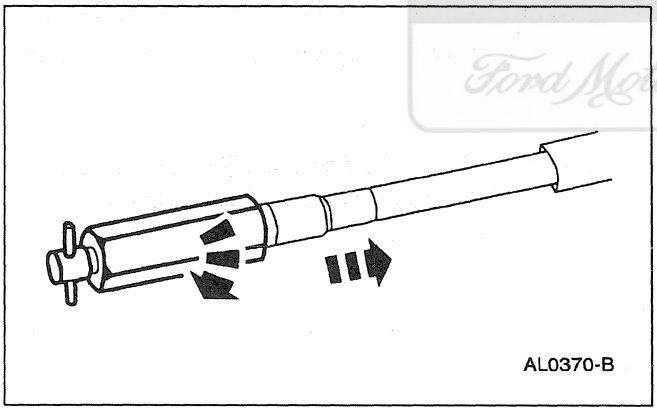

5. Hold the tool T-handle and turn the tool body to remove the broken A/C evaporator core orifice.

Installation

1. Lubricate and install the O-ring seals on the A/C evaporator core orifice.
   - Use Motorcraft Refrigerant Oil YN-12b or equivalent meeting Ford specification WSH-M1C231-B.

REMOVAL AND INSTALLATION (Continued)

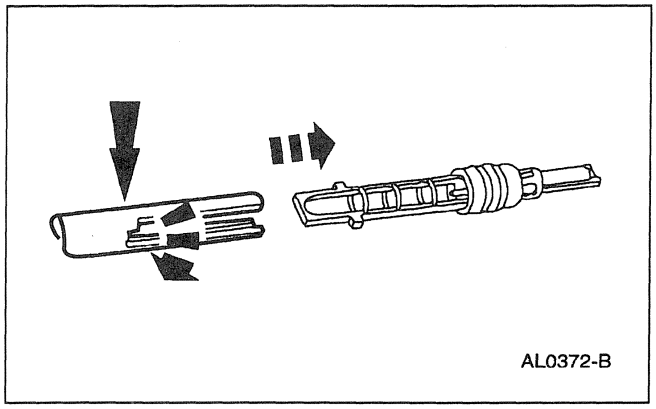
AL0372-B

2. Place the A/C evaporator core orifice into the Fixed Orifice Tube Remover/Replacer.

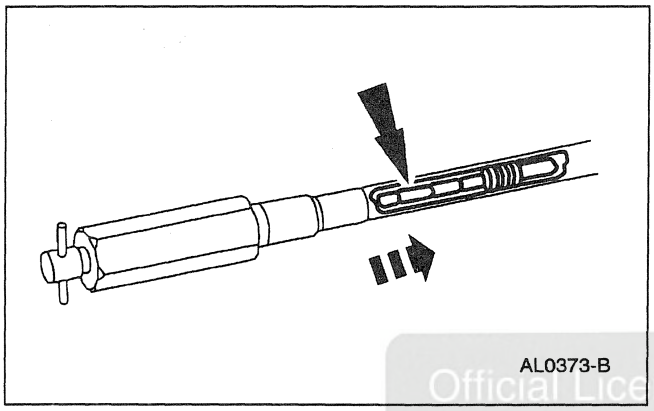
AL0373-B

3. Insert the A/C evaporator core orifice into the condenser to evaporator tube until seated.

Official Licensed Product
Ford Motor Company

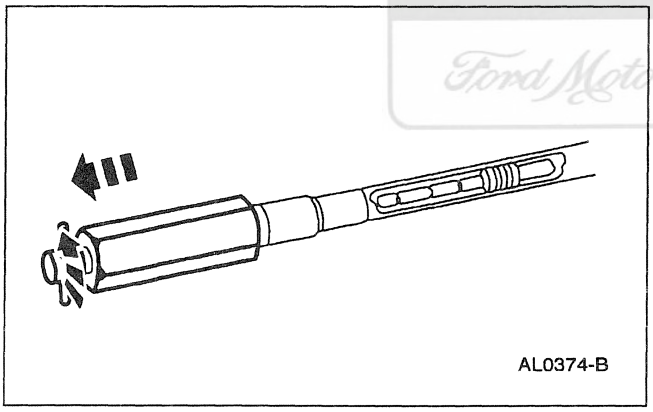
AL0374-B

4. Remove the Fixed Orifice Tube Remover/Replacer.

5. Install the condenser to evaporator tube; refer to Line—Condenser to Evaporator in this section.

Suction Accumulator/Drier

1. Disconnect the battery ground cable (14301).

2. Recover the refrigerant; refer to Section 412-00.

REMOVAL AND INSTALLATION (Continued)

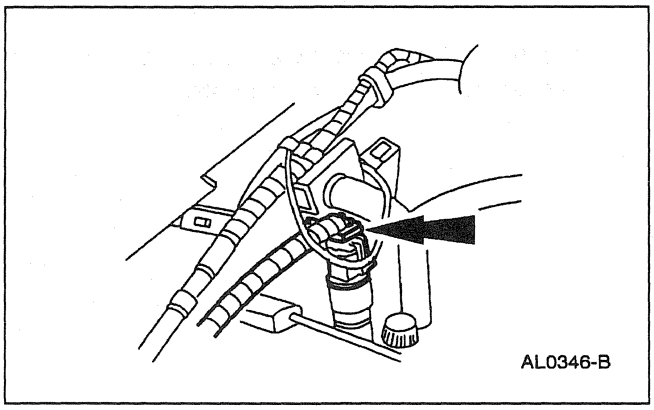

3. Disconnect the wire harness connector.

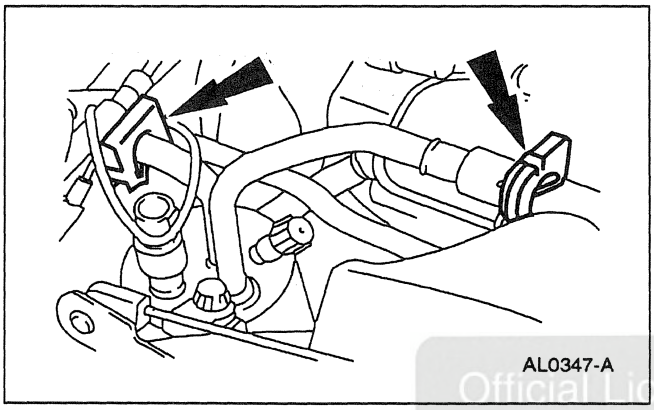

4. Disconnect the suction accumulator/drier (19C836) from the A/C evaporator core (19860) and the evaporator to compressor suction line (19D742); refer to Section 412-00.

Official Licensed Product
Ford Motor Company

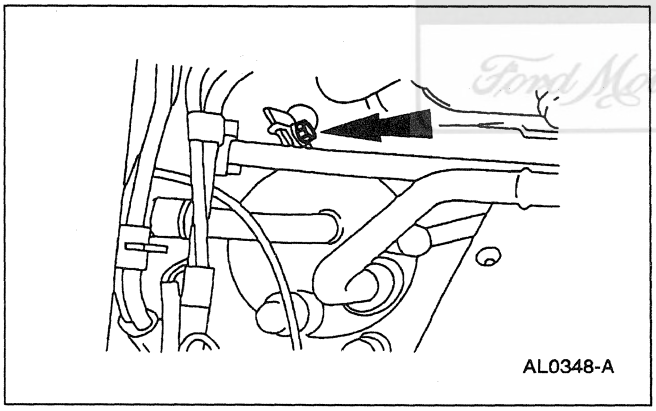

5. Remove the bolt from the A/C accumulator bracket (19D606).

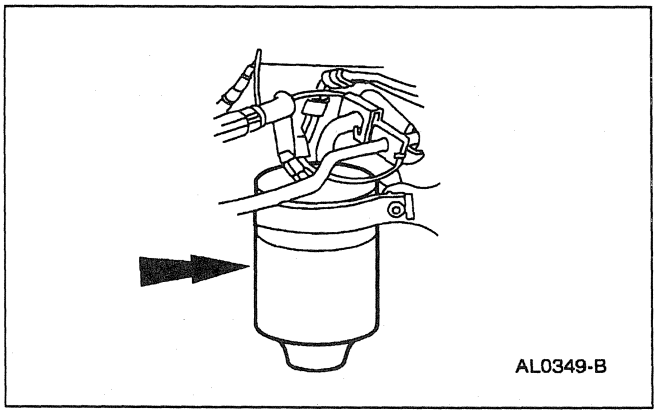

6. Remove the suction accumulator/drier.

REMOVAL AND INSTALLATION (Continued)

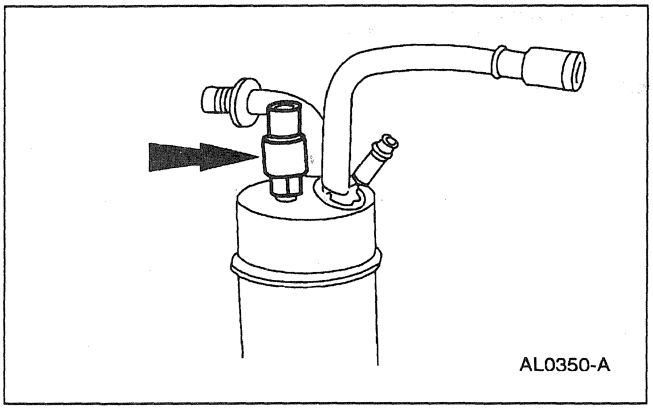

7. Remove the A/C cycling switch (19E561) from the suction accumulator/drier.

Installation

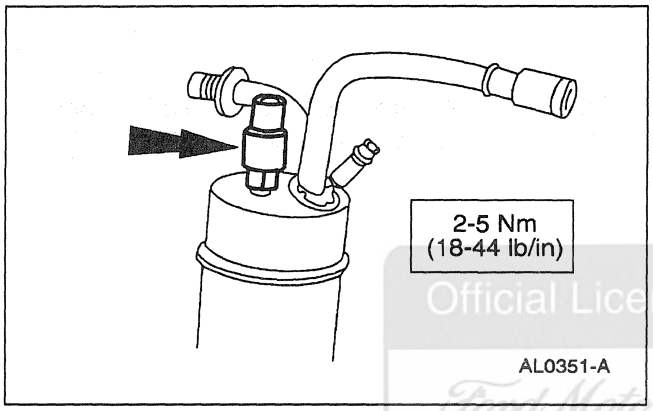

1. Follow the removal procedure in reverse order.
   - Service the refrigerant system with the proper amount of Motorcraft Refrigerant Oil YN-12b or equivalent meeting Ford specification WSH-M1C231-B; refer to Section 412-00.
   - Lubricate the O-ring seal with Motorcraft Refrigerant Oil YN-12b or equivalent meeting Ford specification WSH-M1C231-B.

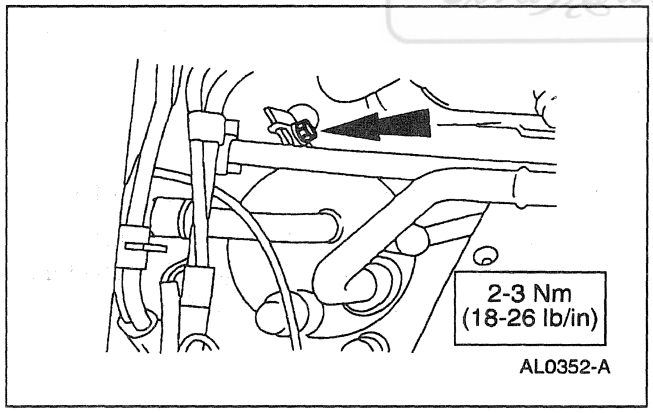

Official Licensed Pr
Ford Motor Company

REMOVAL AND INSTALLATION (Continued)

A/C Cycling Switch

Removal

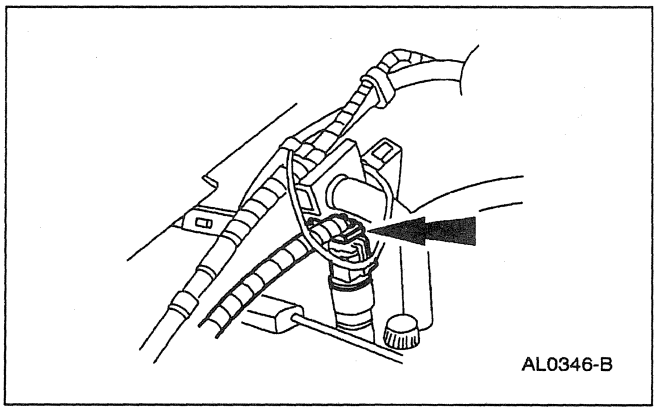

1. Disconnect the A/C cycling pressure switch electrical.

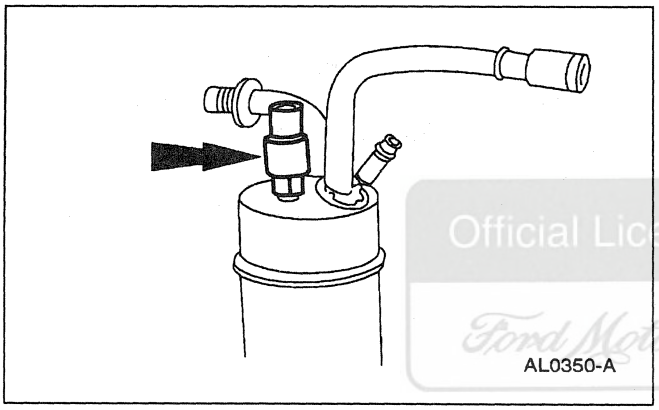

2. Remove the A/C cycling switch (19E561) from the suction accumulator/drier (19C836).

Official Licensed Product
Ford Motor Company

Installation

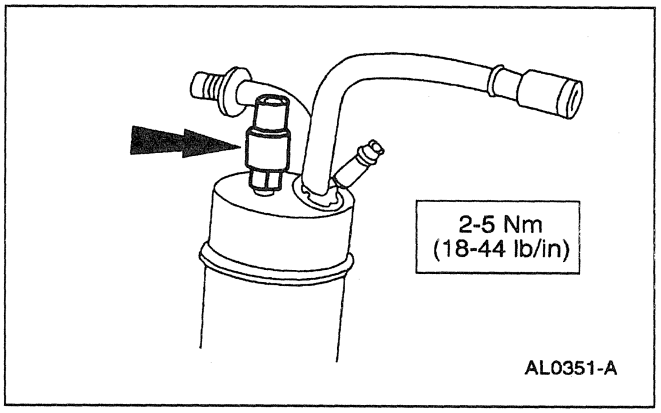

1. Follow the removal procedure in reverse order.
   - Lubricate the O-ring seal with Motorcraft Refrigerant Oil YN-12b or equivalent meeting Ford specification WSH-M1C231-B.

REMOVAL AND INSTALLATION (Continued)

Pressure Transducer

Removal

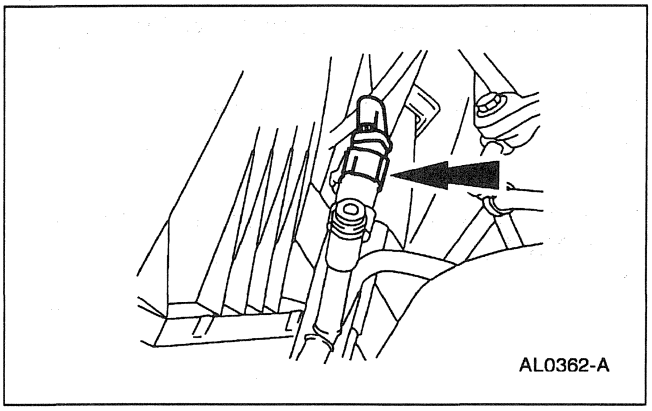

1. Disconnect the A/C pressure transducer electrical connector.

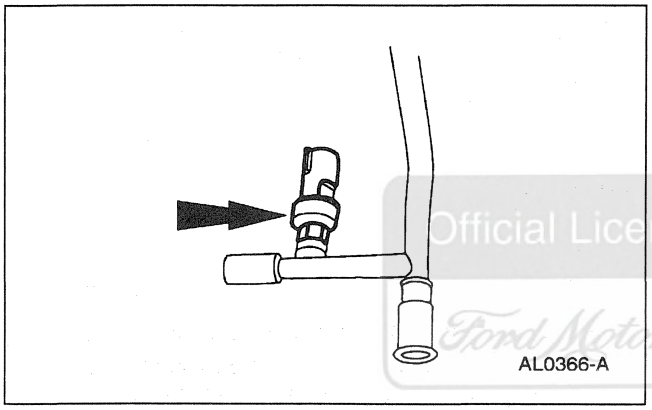

2. Remove the A/C pressure transducer from the A/C compressor to condenser discharge line (19972).

Official Licensed Product
Ford Motor Company

Installation

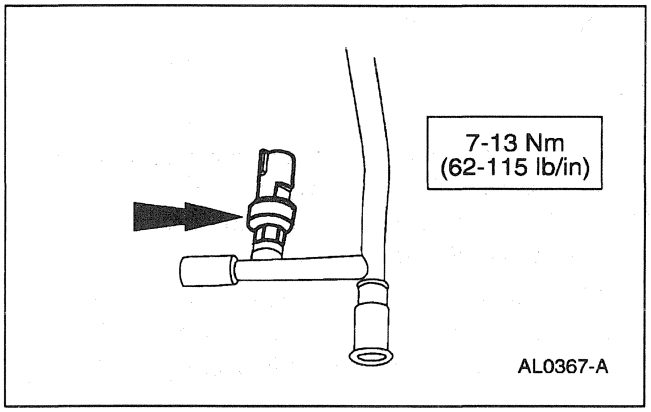

1. Follow the removal procedure in reverse order.
   - Lubricate the O-ring seal with Motorcraft Refrigerant Oil YN-12b or equivalent meeting Ford specification WSH-M1C231-B.

REMOVAL AND INSTALLATION (Continued)

Pressure Relief Valve

Removal

1. Recover the refrigerant; refer to Section 412-00.
2. Raise the vehicle on a hoist; refer to Section 100-02.
3. Remove the A/C compressor pressure relief valve (19D644).

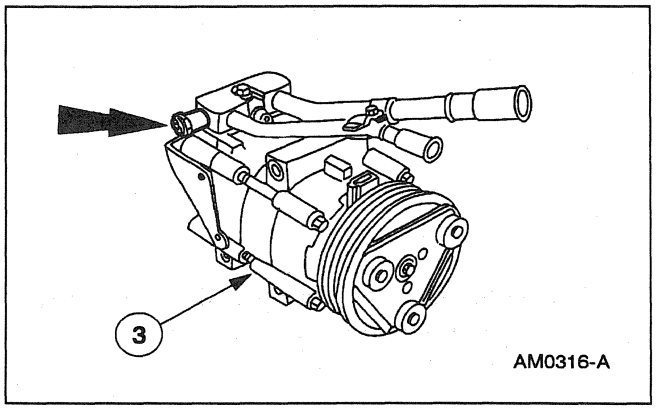

Installation

1. Follow the removal procedure in reverse order.
   - Lubricate the O-ring seal with Motorcraft Refrigerant Oil YN-12b or equivalent meeting Ford specification WSH-M1C231-B.

Official Licensed Product
Ford Motor Company

Condenser Core

Removal

⚠ **CAUTION: To prevent refrigerant system contamination, whenever the A/C condenser core (19712) is replaced, also replace the suction accumulator/drier (19C836).**

NOTE: If an A/C condenser core leak is suspected, the A/C condenser core must be leak-tested before it is removed from the vehicle; refer to Section 412-00.

1. Disconnect the battery ground cable (14301).
2. Recover the refrigerant; refer to Section 412-00.

REMOVAL AND INSTALLATION (Continued)

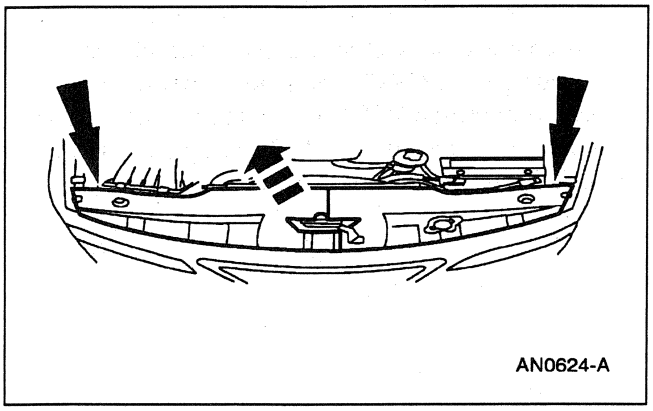

3. Remove the radiator upper sight shield (8C291).

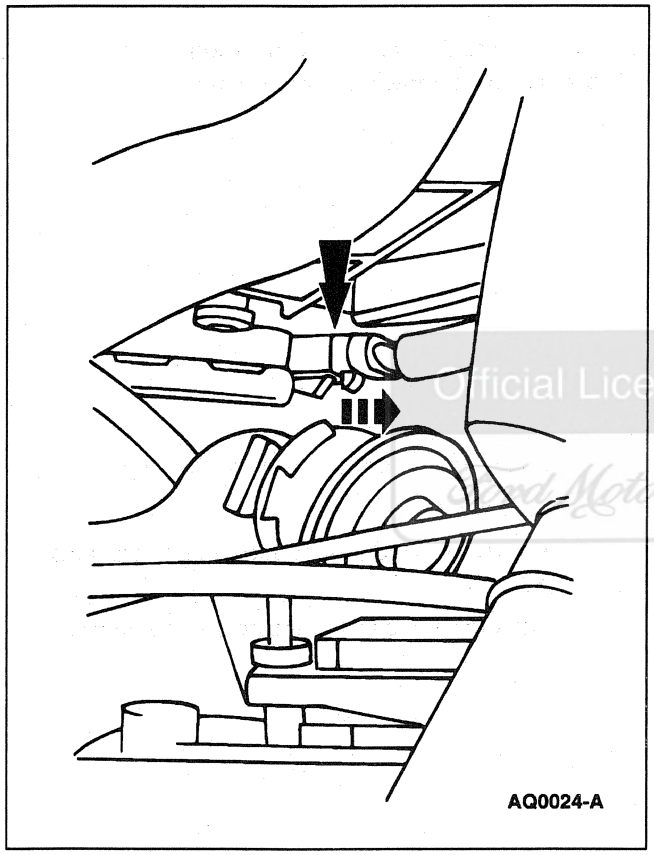

4. Disconnect the engine cooling fan motor wire harness connector.

Official Licensed Product
Ford Motor Company

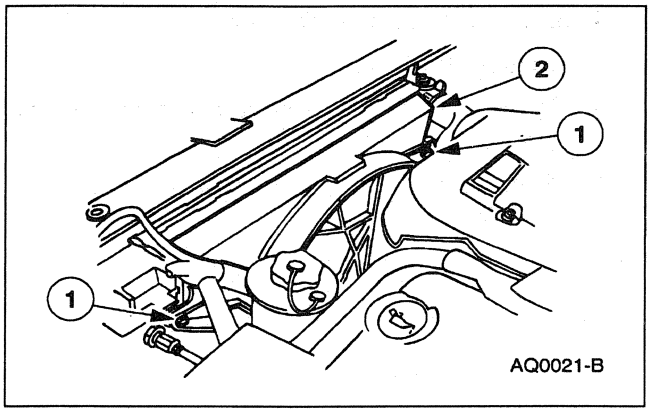

5. Remove the fan motor (8C607).
   1 Remove the bolts.
   2 Lift the fan motor off the mounts on the radiator (8005).

REMOVAL AND INSTALLATION (Continued)

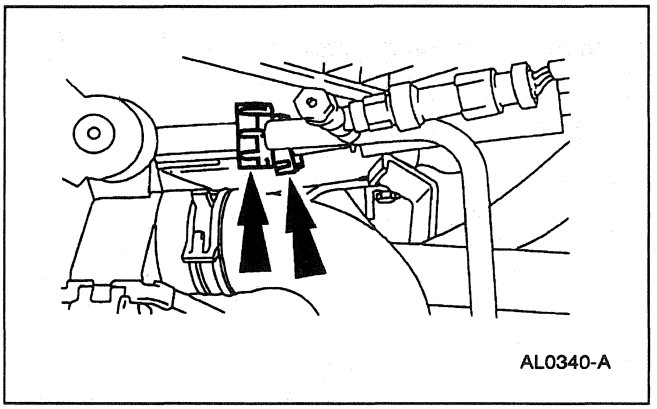

6. Disconnect the A/C compressor to condenser discharge line (19972) and the condenser to evaporator tube (19835) from the A/C condenser core; refer to Spring Lock Coupling Disconnect and Connect in Section 412-00.

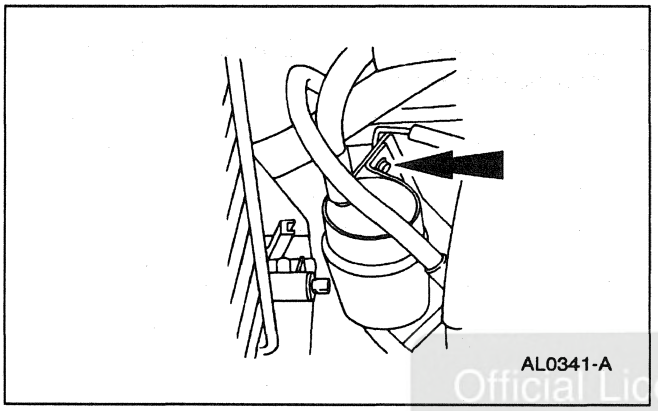

7. Remove the A/C compressor to condenser discharge line bracket clamping bolt.

Official Licensed Product

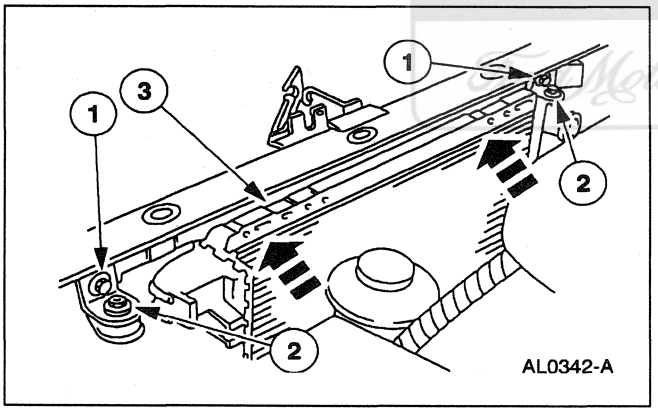

8. Position the radiator back toward the engine.
   1 Remove the bolts.
   2 Remove the radiator support upper brackets (8A193).
   3 Lift and tilt the radiator towards the engine.

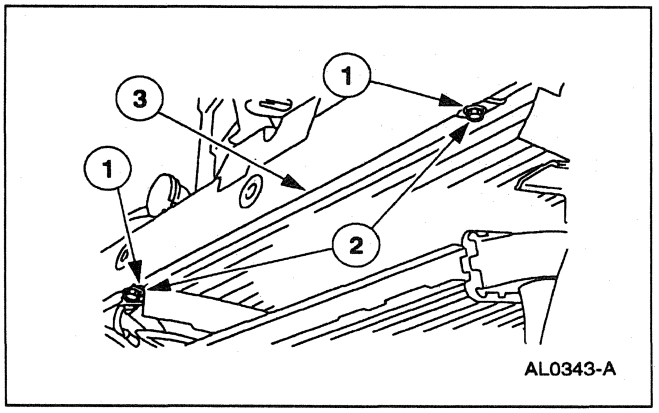

9. Remove the A/C condenser core
   1 Remove the bolts.
   2 Remove the A/C condenser mounting brackets (19702).
   3 Remove the A/C condenser core from the vehicle.

REMOVAL AND INSTALLATION (Continued)

Installation

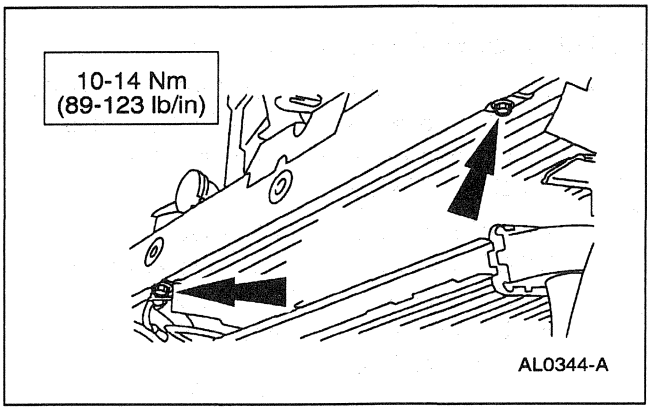

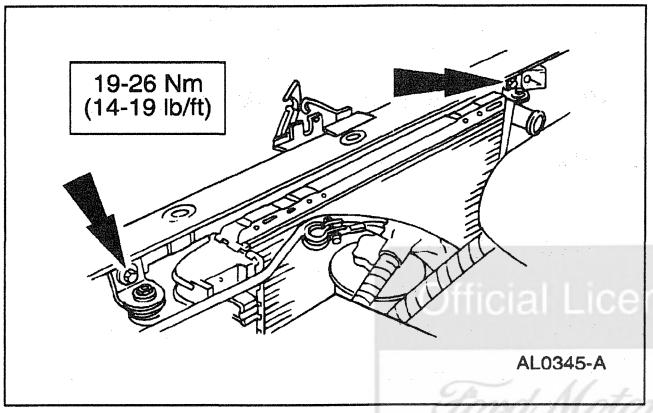

1. Follow the removal procedure in reverse order.
   - Service the replacement A/C condenser core with the proper amount of Motorcraft Refrigerant Oil YN-12b or equivalent meeting Ford specification WSH-M1C231-B; refer to Section 412-00.

Official Licensed Product
Ford Motor Company

Manifold and Tube Assembly

Removal

1. Remove the A/C compressor (19703); refer to Compressor in this section.

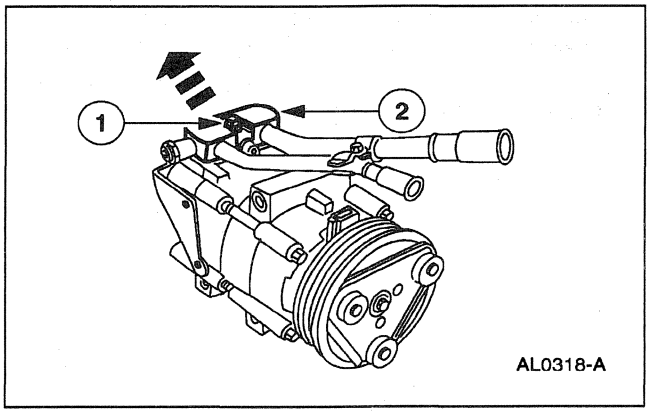

2. Remove the A/C manifold and tube (19D734) from the A/C compressor.
   1 Loosen the bolt.
   2 Remove the A/C manifold and tube.

REMOVAL AND INSTALLATION (Continued)

Installation

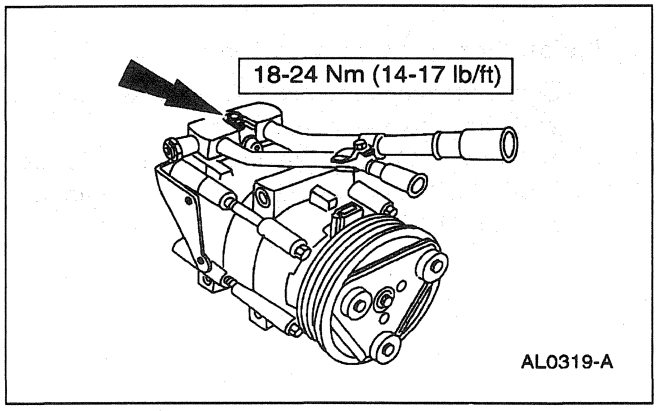

1. Follow the removal procedure in reverse order.
   - Lubricate the new A/C manifold O-ring seals with Motorcraft Refrigerant Oil YN-12b or equivalent meeting Ford specification WSH-M1C231-B.
   - Apply Pipe Sealant with Teflon® D8AZ-19554-A or equivalent meeting Ford specification WSK-M2G350-A2 and ESR-M18P7-A to the threads of the A/C manifold retaining bolt.

Line — Condenser to Evaporator

Removal

1. Recover the refrigerant; refer to Section 412-00.

Official Licensed Product

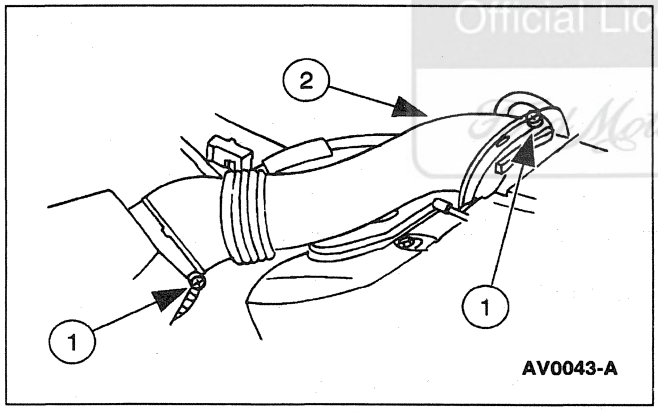

2. Remove the air cleaner outlet tube (9B659).
   1 Loosen the engine air cleaner tube clamps (9C632).
   2 Remove the air cleaner outlet tube.

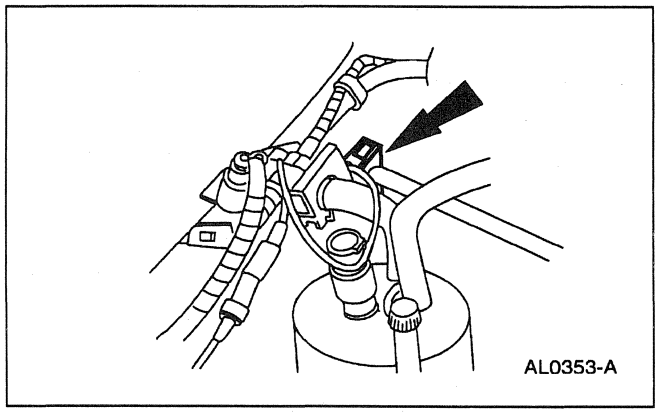

3. Disconnect the condenser to evaporator tube (19835) from the A/C evaporator core (19860); refer to Spring Lock Couplings Disconnect and Connect in Section 412-00.

REMOVAL AND INSTALLATION (Continued)

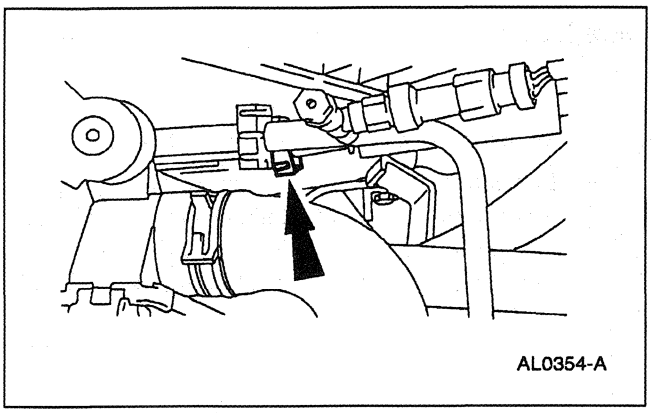
AL0354-A

4. Disconnect the condenser to evaporator tube from the A/C condenser core (19712); refer to Spring Lock Couplings Disconnect and Connect in Section 412-00.

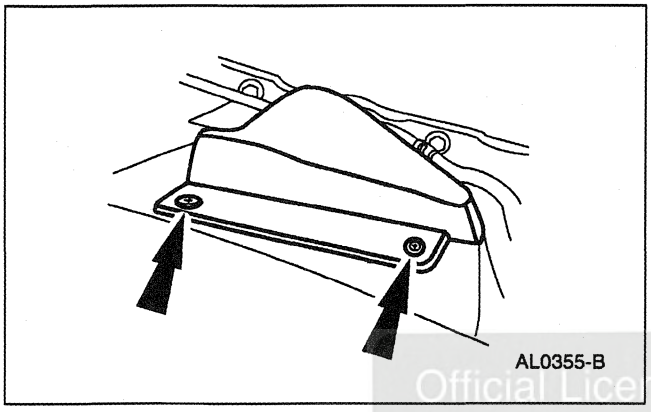
AL0355-B

5. Remove the screws and the strut cover.

Official Licensed Product
Ford Motor Company

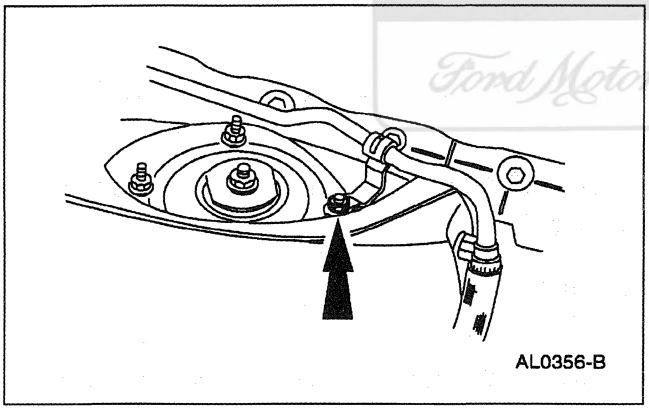
AL0356-B

6. Remove the condenser to evaporator tube support clip retaining nut.

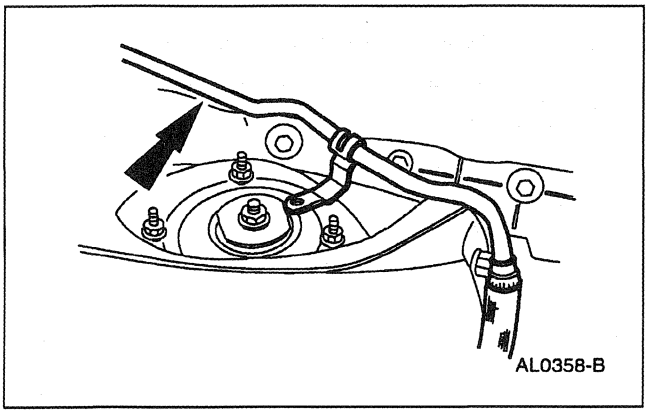
AL0358-B

7. Remove the condenser to evaporator tube.

REMOVAL AND INSTALLATION (Continued)

Installation

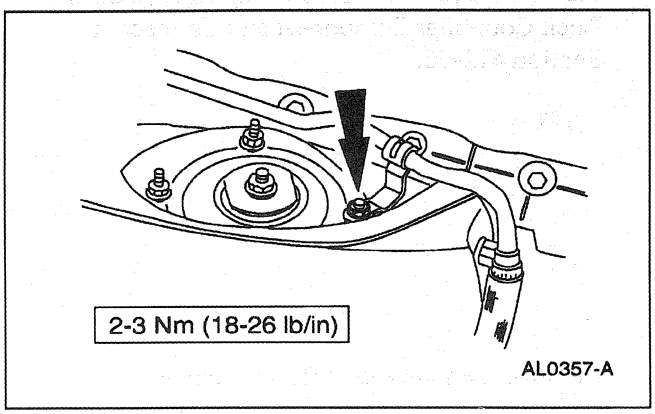

1. Follow the removal procedure in reverse order.
   - Service the refrigerant system with the proper amount of Motorcraft Refrigerant Oil YN-12b or equivalent meeting Ford specification WSH-M1C231-B; refer to Section 412-00.

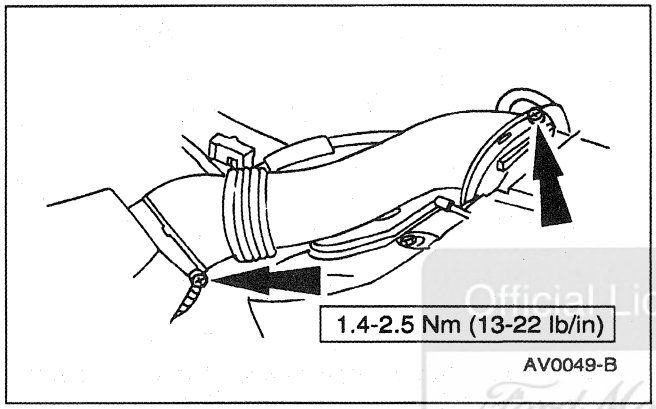

Official Licensed Product
Ford Motor Company

Line — Evaporator to Compressor Suction

Removal

1. Recover the refrigerant; refer to Section 412-00.

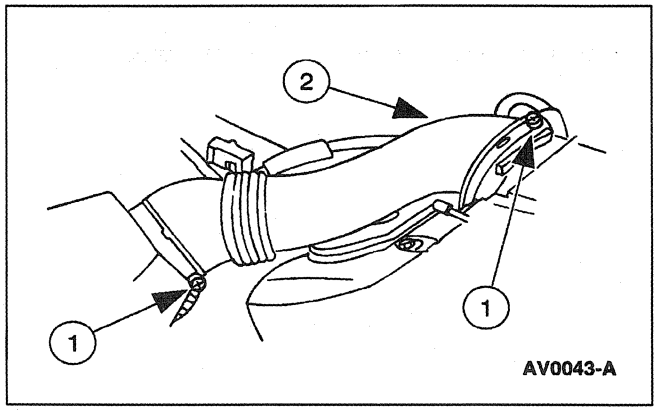

2. Remove the air cleaner outlet tube (9B659).
   1 Loosen the engine air cleaner tube clamps (9C632).
   2 Remove the air cleaner outlet tube.

REMOVAL AND INSTALLATION (Continued)

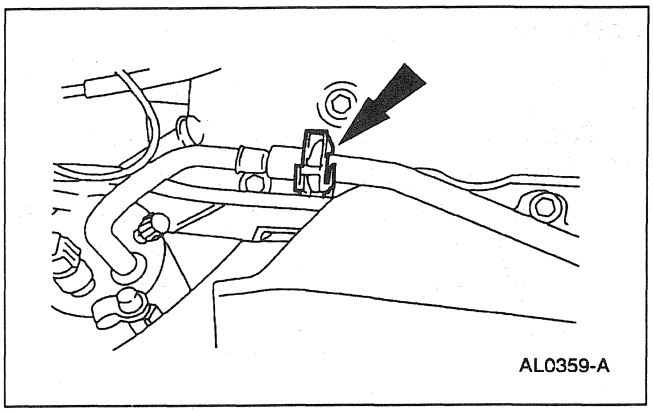
AL0359-A

3. Disconnect the evaporator to compressor suction line (19D742) from the suction accumulator/drier (19C836); refer to Spring Lock Couplings Disconnect and Connect in Section 412-00.

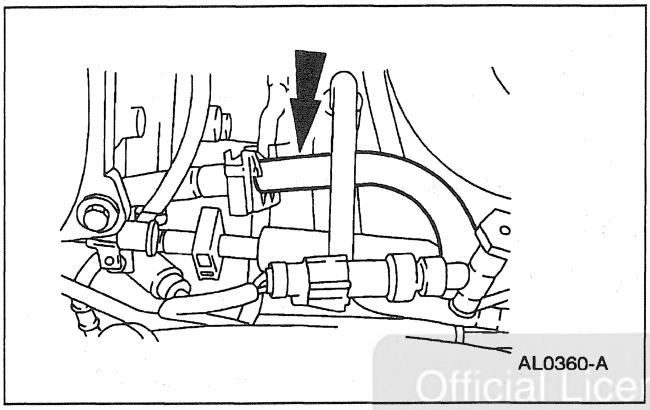
AL0360-A

4. Disconnect the evaporator to compressor suction line from the A/C manifold and tube (19D734); refer to Spring Lock Couplings Disconnect and Connect in Section 412-00.

Official Licensed Product
Ford Motor Company

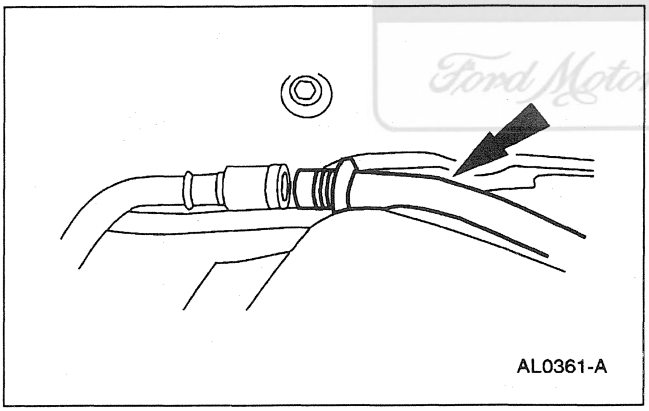
AL0361-A

5. Remove the evaporator to compressor suction line.

REMOVAL AND INSTALLATION (Continued)

Installation

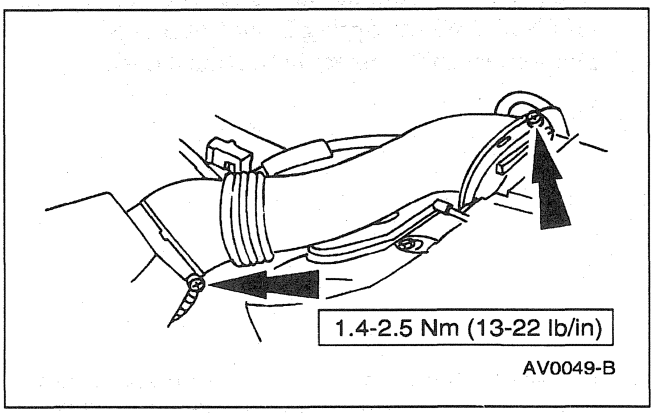

1. Follow the removal procedure in reverse order.
   - Service the refrigerant system with the proper amount of Motorcraft Refrigerant Oil YN-12b or equivalent meeting Ford specification WSH-M1C231-B; refer to Section 412-00.

Line — Compresssor to Condenser Discharge

Removal

Official Licensed Product
Ford Motor Company

1. Disconnect the battery ground cable (14301).
2. Recover the refrigerant; refer to Section 412-00.
3. Disconnect the wire harness connector from the A/C pressure transducer.

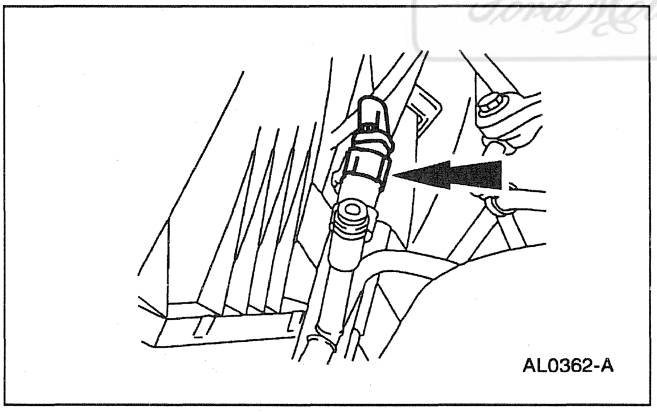

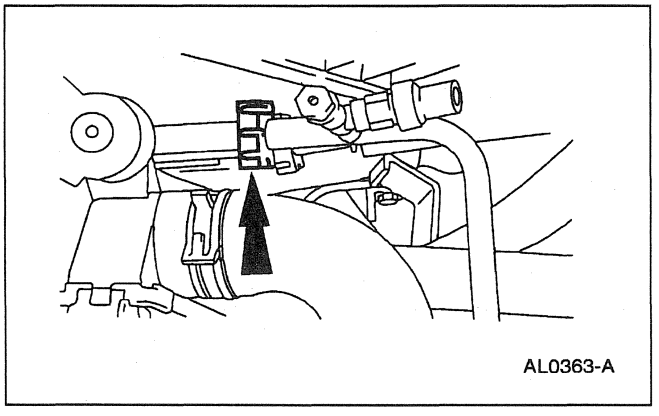

4. Disconnect the A/C compressor to condenser discharge line (19972) from the A/C condenser core (19712); refer to the Spring Lock Couplings Disconnect and Connect in Section 412-00.

REMOVAL AND INSTALLATION (Continued)

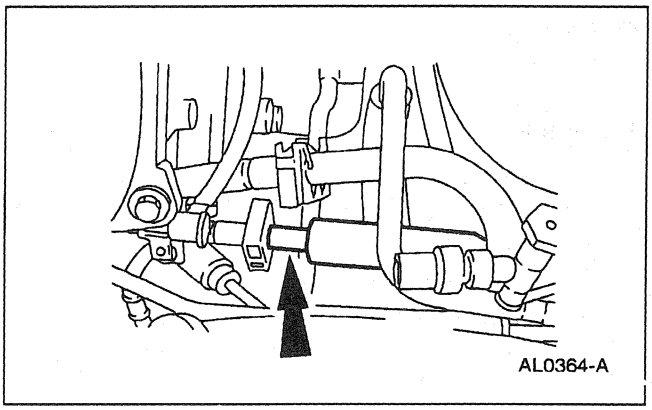

5. Disconnect the A/C compressor to condenser discharge line from the A/C manifold and tube (19D734); refer to the Spring Lock Couplings Disconnect and Connect in Section 412-00.

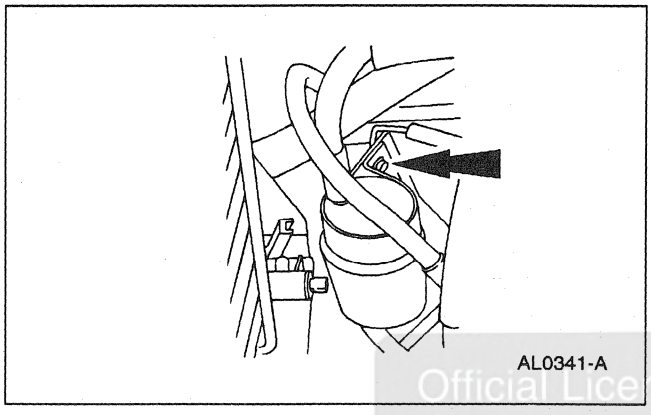

6. Remove the A/C compressor to condenser discharge line bracket clamping bolt.

Official Licensed Product
Ford Motor Company®

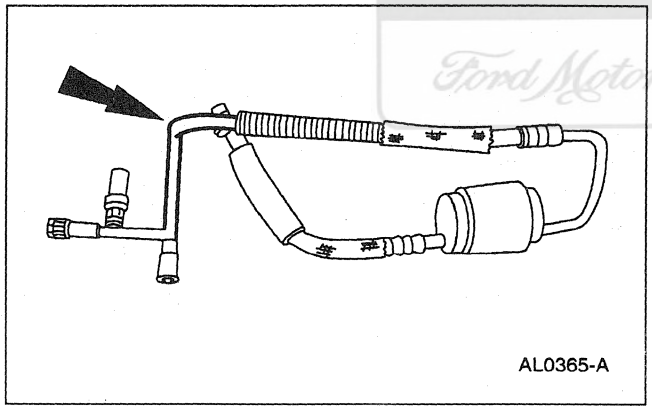

7. Remove the A/C compressor to condenser discharge line.

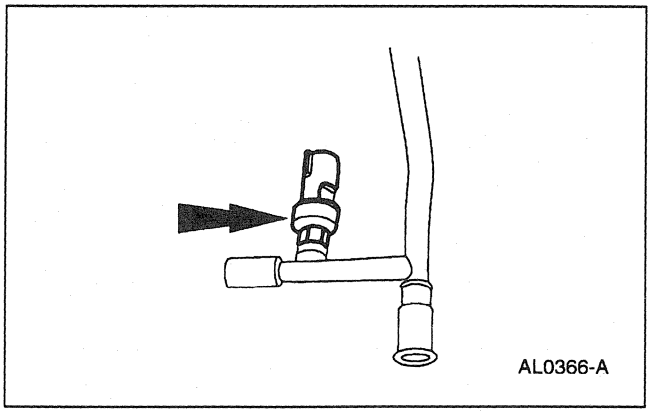

8. Remove the A/C pressure transducer from the A/C compressor to condenser discharge line.

REMOVAL AND INSTALLATION (Continued)

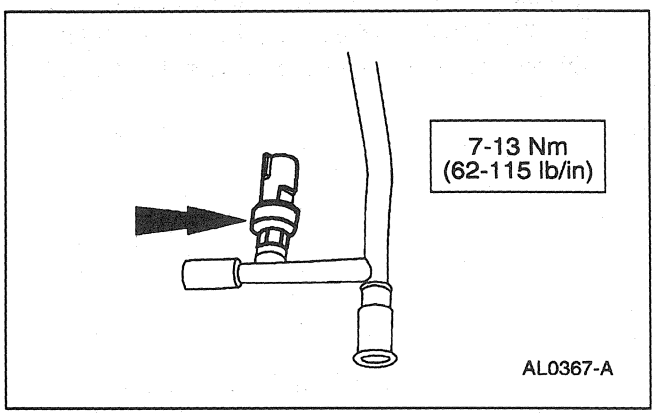

Installation

1. Follow the removal procedure in reverse order.
   - Service the refrigerant system with the proper amount of Motorcraft Refrigerant Oil YN-12b or equivalent meeting Ford specification WSH-M1C231-B; refer to Section 412-00.
   - Lubricate the O-ring seal with Motorcraft Refrigerant Oil YN-12b or equivalent meeting Ford specification WSH-M1C231-B.

SPECIFICATIONS

General Specifications

Item	Specification
A/C Compressor FS-10	
Displacement	170 cc (10.4 CID)
Cylinder Bore	29.0 mm (1.14 in)
Cylinder Stroke	25.7 mm (1.0 in)
Rotation	Clockwise
Rotational Torque (Open Ports)	10 Nm (7 lb-ft) Maximum
Magnetic Clutch	
Air Gap Between Pulley and Hub	0.35 mm-0.85 mm (0.014-0.033 inch)
A/C Evaporator Core Orifice	
Color code	Orange
Orifice Diameter	1.46 mm (0.0575 in)
A/C Cycling Switch	
Close	276-324 kPa (40-47 psi)
Open	152-193 kPa (22-28 psi)
A/C Pressure Relief Valve	
Open	3103 kPa (450 psi) Minimum
Capacities	
Refrigerant Capacity	0.964 kg ± 0.028 kg (34.0 oz ± 1.0 oz)
Oil Capacity	207 ml (7.0 oz)
Lubricants	
Motorcraft Refrigerant Oil YN-12b	WSH-M1C231-B

(Continued)

General Specifications

Item	Specification
HFC Refrigerant R-134a YN-11a	WSH-M17B19-A
Pipe Sealant with Teflon® D8AZ-19554-A	WSK-M2G350-A2 and ESR-M18P7-A

Torque Specifications

Description	Nm	Lb/Ft	Lb/In
A/C Compressor Mounting Bolts	20-30	15-22	—
A/C Manifold and Tube Retaining Bolt	18-24	14-17	—
A/C Compressor Clutch Retaining Bolt	11-14	—	98-123
A/C Condenser Core Mounting Bracket Retaining Bolts	10-14	—	89-123
Radiator Mounting Bracket Retaining Bolts	19-26	14-19	—
A/C Cycling Switch	2-5	—	18-44
Accumulator Mounting Bracket Clamp Bolt	2-3	—	18-26
Condenser to Evaporator Tube Clamp Retaining Nut	2-3	—	18-26
Engine Air Cleaner Tube Clamp	1.4-2.5	—	13-22
A/C Pressure Transducer	7-13	—	62-115
Suction Filter Hose Clamps	6.2	—	54

Licensed Product Ford Motor Company

SECTION 412-04 Control Components

VEHICLE APPLICATION: Mark VIII

SUBJECT **PAGE**

DESCRIPTION AND OPERATION
Control Components 412-04-2
DIAGNOSIS AND TESTING
Control Components 412-04-7
REMOVAL AND INSTALLATION
Actuator — A/C Electric Blend Door 412-04-10
Blower Motor Speed Control 412-04-11
Control Assembly 412-04-7
Sensor — A/C Sunload 412-04-9
Sensor — In-Car Temperature 412-04-10
Vacuum Control Motor — Air Inlet Duct Door 412-04-16
Vacuum Control Motor — Heater Air Damper Door 412-04-12
Vacuum Control Motor — Windshield Defroster Door 412-04-15
Vacuum Reservoir Tank and Bracket 412-04-17
SPECIFICATIONS 412-04-18

Official Licensed Product
Ford Motor Company

DESCRIPTION AND OPERATION

Control Components

Electronic Automatic Temperature Control

With the use of a microcontroller, the electronic automatic temperature control (EATC) module analyzes input from the following major sources:

- temperature, function and blower selection (made by the vehicle occupants)
- in-vehicle temperature
- ambient temperature
- sunload
- vehicle speed
- engine coolant temperature

Using these inputs, the microcontroller determines the correct conditions for the following outputs:

- A/C compressor clutch engagement
- blower speed
- air temperature blend door position
- heater air damper door position
- windshield defroster door position
- air inlet duct door position

Official Licensed Product
Ford Motor Company

DESCRIPTION AND OPERATION (Continued)

Component Locations

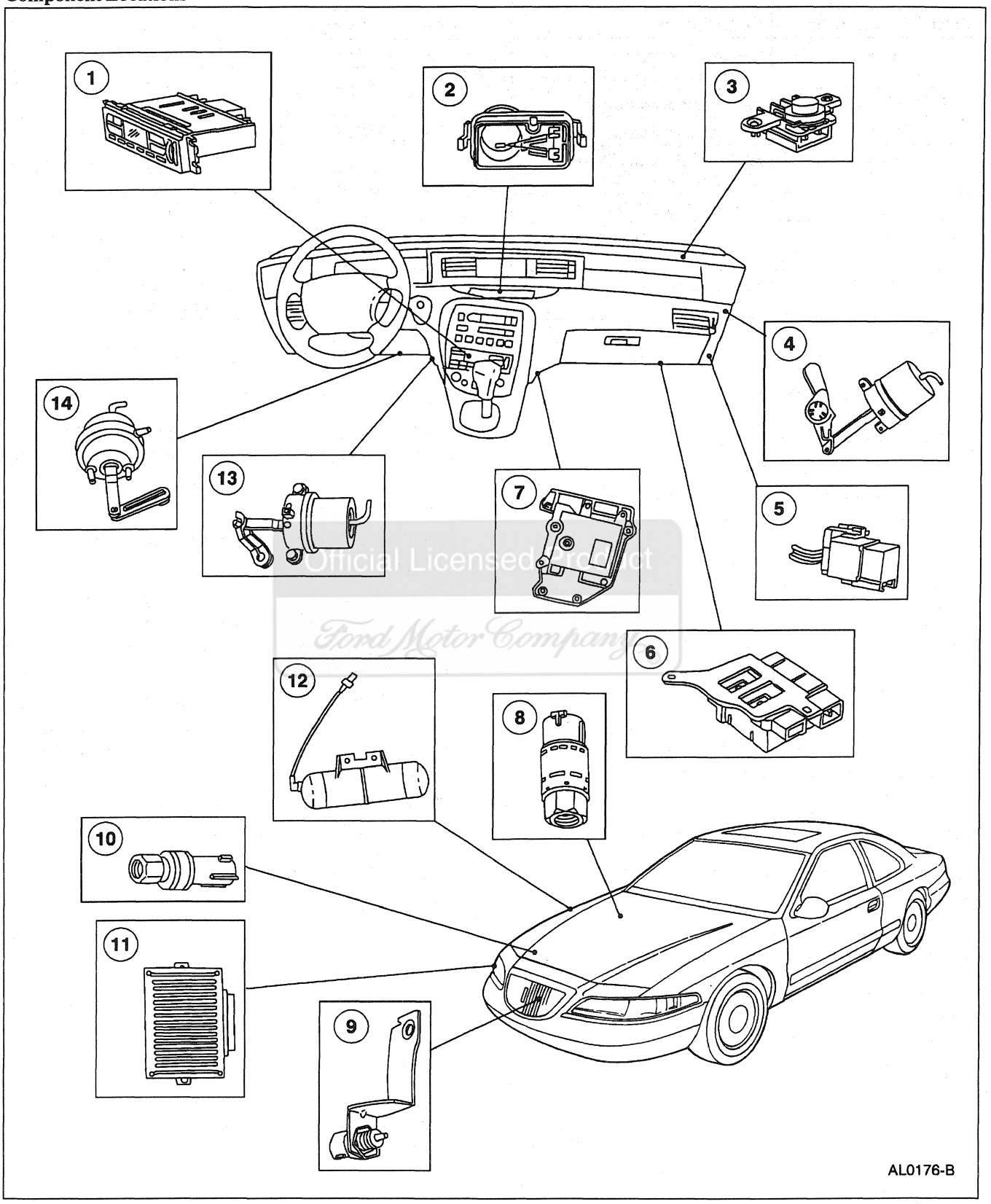

Official Licensed Product
Ford Motor Company

DESCRIPTION AND OPERATION (Continued)

Item	Part Number	Description
1	18C612	Electronic Automatic Temperature Control Module
2	19D888	In-car Temperature Sensor
3	19E663	A/C Sunload Sensor
4	18A318	A/C Air Inlet Duct Door Vacuum Control Motor
5	14B193	Blower Motor Relay
6	19E624	A/C Blower Motor Speed Control
7	19E616	A/C Electric Blend Door Actuator

Item	Part Number	Description
8	19E561	A/C Cycling Switch
9	19E702	A/C Ambient Air Temperature Sensor and Bracket
10	19D594	A/C Pressure Transducer
11	—	Variable Load Control Module
12	19A566	A/C Vacuum Reservoir Tank and Bracket
13	18A318	Windshield Defroster Door Vacuum Control Motor
14	18A318	Heater Air Damper Door Vacuum Control Motor

(Continued)

Control System Inputs

Climate Control Assembly

The electronic automatic temperature control (EATC) module, located in the instrument panel, has the following features:

- 11 push buttons
- a blower speed override thumbwheel for manual input
- a vacuum fluorescent display for displaying set temperature, ambient temperature, function and diagnostic trouble codes (DTCs)
- an On-Board Diagnostic (OBD) feature to supply the technician with diagnostic trouble codes (DTCs). These DTCs direct the technician to the inoperative component.

A/C Ambient Air Temperature Sensor

The A/C ambient air temperature sensor and bracket (19E702) :

- is located in front of the A/C condenser core (19712) near the center of the vehicle.
- contains a thermistor which measures the temperature of outside air as a resistance and sends that reading to the electronic automatic temperature control assembly.

In-Car Temperature Sensor

The in-car temperature sensor, which is part of the message center control panel, operates in the following manner:

- A thermistor in the in-car temperature sensor measures air temperature inside the passenger compartment.
- An automatic temperature control sensor hose and elbow (19D888) is connected between the A/C evaporator housing (19850) and the in-car temperature sensor.
- The automatic temperature control sensor hose and elbow takes air from the A/C evaporator housing air stream to create a suction in the in-car temperature sensor.
- The suction draws in-vehicle air into the in-car temperature sensor and across the thermistor.

A/C Sunload Sensor

The A/C sunload sensor (19E663) :

- is located on the top RH side of the instrument panel (04320) above the glove compartment (06010).
- contains a photovoltaic diode that is sensitive to light.

Official Licensed Product
Ford Motor Company

DESCRIPTION AND OPERATION (Continued)

- has some unspecified resistance across the terminals depending upon the amount of light reaching the photovoltaic diode; therefore the only test that can be performed is for an internal short circuit.

Control System Outputs

A/C Blower Motor Speed Control

The A/C blower motor speed control (19E624) is located under the A/C evaporator housing, forward of the blower motor (18527).

- The function of the A/C blower motor speed control is to convert low power signals from the electronic automatic temperature control module to a high current, variable ground feed for the blower motor.
- A/C blower motor speed is infinitely variable and is controlled by the electronic automatic temperature control module software.
- A delay function provides a gradual increase or decrease in blower motor speed under all conditions.

A/C Electric Blend Door Actuator

The A/C electric blend door actuator is located on the rear of the A/C evaporator housing.

- Its function is to move the air temperature blend doors on command from the control assembly.
- The A/C electric blend door actuator contains a reversible electric motor and a potentiometer. The potentiometer wiper is connected to the actuator output shaft and moves with the output shaft to indicate the position of the air temperature blend door.
- A 5 volt signal is applied to the ends of the potentiometer. The voltage available at the wiper indicates the position of the potentiometer. The expressed value of the actuator wiper voltage is sent to the electronic automatic temperature control module and is matched with the wiper voltage of the module potentiometer. The control module then drives the actuator motor in whichever direction is necessary to make the actuator wiper voltage agree with the control module wiper voltage.

Vacuum Control Motors

The vacuum control motors (18A318) :

- are located on the A/C evaporator housing, A/C recirculating air duct (19C590) and heater air plenum chamber (18471).
- direct system airflow to the vehicle interior as determined by the electronic automatic temperature control module or manual override.

Variable Load Control Module

The variable load control module:

- is located behind the RH front wheel inner splash shield.
- incorporates circuit control provisions for the fan motor (8C607) and the A/C clutch field coil (2987).
- communicates with the powertrain control module through the multiplex communication network.

Official Licensed Product

DESCRIPTION AND OPERATION (Continued)

SYSTEM RESPONSE

Control Assembly Selection	Air Temperature Blend Door Response	Heater Air Damper Door Response	Windshield Defroster Door Response	Air Inlet Duct Door Response	Blower Motor Response (Unless Manually Overridden)	A/C Clutch Response [a]
OFF	Remains fixed	Air to the Plenum Chamber	Fixed in DEFROST	Fixed in RECIRC	Blower Motor OFF	A/C Clutch disabled.
AUTO	Varies according to the sensor temperatures and the customer temperature selection. The air temperature blend door is in the heat position when the sensors are cool. The air temperature blend door is in the A/C position when the sensors are hot.	Air to the floor during heating. Air to the plenum chamber during cooling. Air to both between heating and cooling.	Air to the windshield defroster hose nozzle during heating. Air to the panel during cooling.	Recirculates air when maximum air conditioning is required. Otherwise outside air.	Variable blower motor speeds when the engine coolant temp. is above 49°C (120°F) or A/C is required. Low blower motor speed when the engine coolant is below 49°C (120°F) and heating is required. [b]	A/C Clutch enabled if outside temp. is above 10°C (50°F)
MAX A/C	Varies according to the sensor temperatures and the customer temperature selection.	Air to the plenum chamber.	Fixed in the PANEL position.	Fixed in the RECIRC position.	Variable blower motor speeds.	A/C Clutch enabled if outside temp. is above 10°C (50°F)
VENT	Varies according to the sensor temperatures and the customer temperature selection.	Air to the plenum chamber.	Fixed in the PANEL position.	Fixed in the outside air position.	Variable blower motor speeds.	A/C Clutch disabled
PNL-FLR	Varies according to the sensor temperatures and the customer temperature selection.	Air to the plenum chamber and the floor.	Fixed in the PANEL position.	Fixed in the outside air position.	Variable blower motor speeds.	A/C Clutch enabled if outside temp. is above 10°C (50°F)

(Continued)

Official Licensed Product

DESCRIPTION AND OPERATION (Continued)

SYSTEM RESPONSE

Control Assembly Selection	Air Temperature Blend Door Response	Heater Air Damper Door Response	Windshield Defroster Door Response	Air Inlet Duct Door Response	Blower Motor Response (Unless Manually Overridden)	A/C Clutch Response [a]
FLOOR	Varies according to the sensor temperatures and the customer temperature selection.	Air to floor.	Fixed in the DEFROST position.	Fixed in the outside air position.	Variable blower motor speeds.	A/C Clutch disabled
FLR-DEF	Varies according to the sensor temperatures and the customer temperature selection.	Air to the plenum chamber and the floor.	Fixed in the PANEL position.	Fixed in the outside air position.	Variable blower motor speeds.	A/C Clutch enabled
DEFROST	Varies according to the sensor temperatures and the customer temperature selection.	Air to the plenum chamber.	Fixed in the DEFROST position.	Fixed in the outside air position.	Variable blower motor speeds.	A/C Clutch enabled

Official Licensed Product
Ford Motor Company

a The A/C clutch circuit is energized by the EATC module but the final control of clutch operation is determined by the powertrain control module through the variable load control module. The A/C clutch can be shut off (or kept off) for several seconds at engine start-up, during high engine speeds, during acceleration, during low engine idle conditions (approximately 200 rpm below idle specs) and when the engine coolant temperature sensor reading exceeds approximately 120°C (248°F).

b If the engine coolant temperature fails to reach 50°C (122°F) after 3 1/2 minutes of operation, the heater blower motor speed will increase and the windshield defroster door will shift from the defrost position to the floor position.

DIAGNOSIS AND TESTING

Control Components

Refer to Section 412-00.

REMOVAL AND INSTALLATION

Control Assembly

Removal

1. Disconnect the battery ground cable (14301).

REMOVAL AND INSTALLATION (Continued)

2. Remove the instrument panel lower center finish panel; refer to Section 501-12.

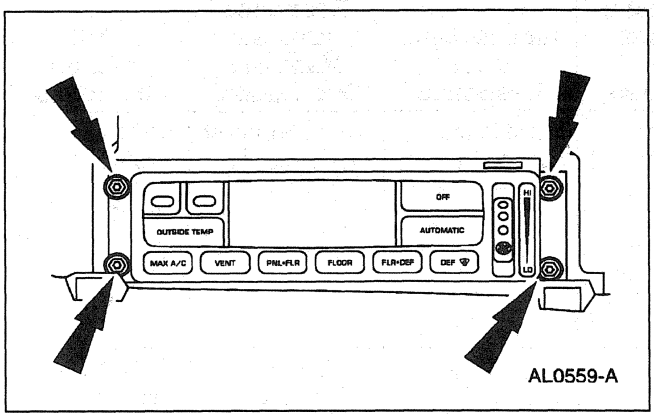

3. Remove the screws from the electronic automatic temperature control module.

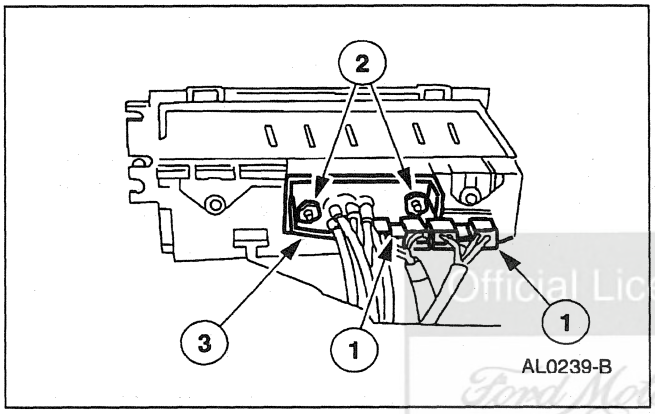

4. Remove the electronic automatic temperature control module.
   1 Disconnect the electrical connectors.
   2 Remove the nuts.
   3 Disconnect the vacuum harness connector.

Official Licensed Product
Ford Motor Company

Installation

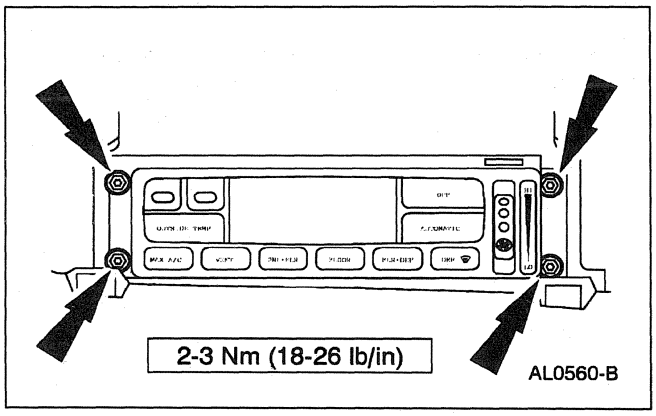

1. Follow the removal procedure in reverse order.

REMOVAL AND INSTALLATION (Continued)

Sensor — A/C Sunload

Removal

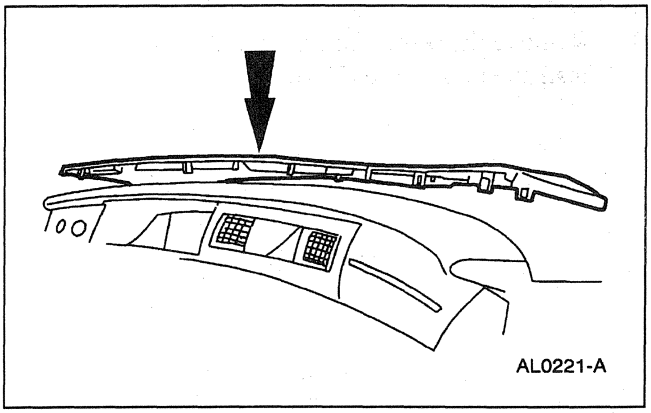

1. Remove the instrument panel upper finish panel.

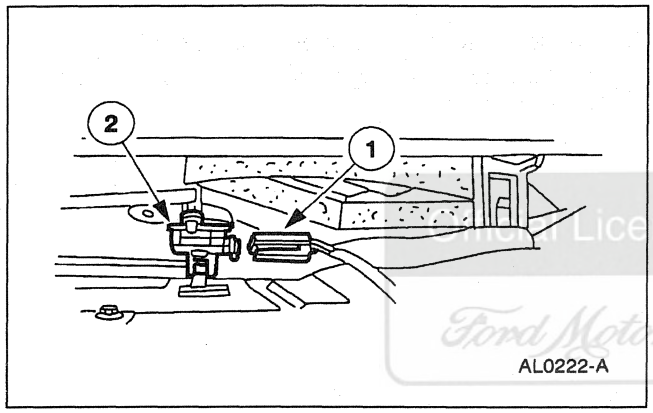

2. Remove the A/C sunload sensor (19E663).
   1 Disconnect the wire harness connector.
   2 Remove the A/C sunload sensor from the instrument panel upper finish panel.

Licensed Product
Ford Motor Company

Installation

1. Follow the removal procedure in reverse order.

REMOVAL AND INSTALLATION (Continued)

Sensor — In-Car Temperature

Removal

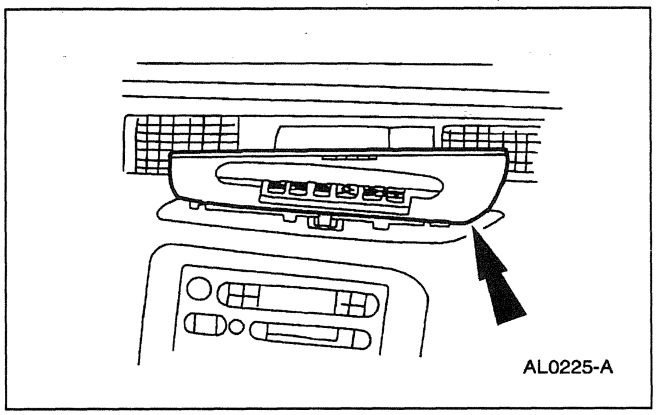

1. Remove the center finish panel from the instrument panel (04320).

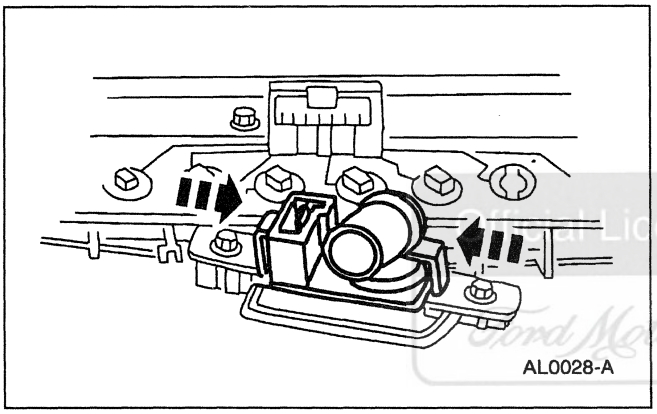

2. Remove the in-car temperature sensor from the center finish panel by pushing in on the retaining tabs.

Official Licensed Product
Ford Motor Company

Installation

1. Follow the removal procedure in reverse order.

Actuator — A/C Electric Blend Door

1. Remove the instrument panel (04320); refer to Section 501-12.

REMOVAL AND INSTALLATION (Continued)

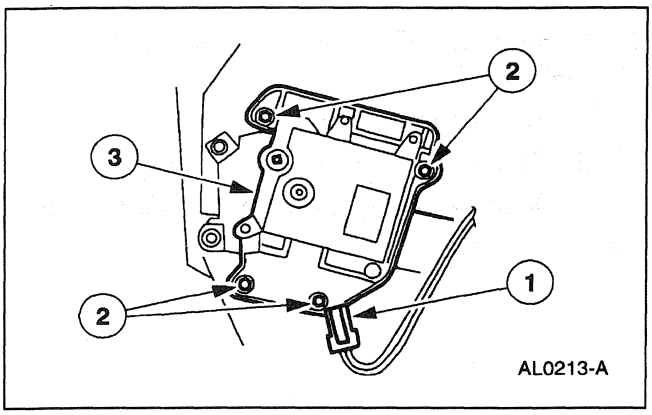

2. Remove the A/C electric blend door actuator.
   1 Disconnect the wire harness connector.
   2 Remove the screws.
   3 Remove the A/C electric blend door actuator.

Installation

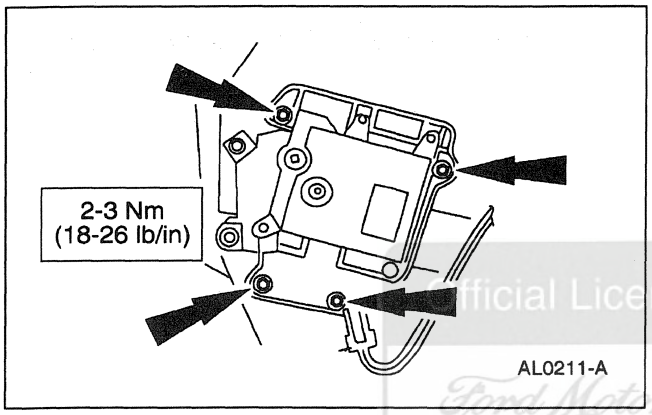

1. Follow the removal procedure in reverse order.

Official Licensed Product
Ford Motor Company

Blower Motor Speed Control

Removal

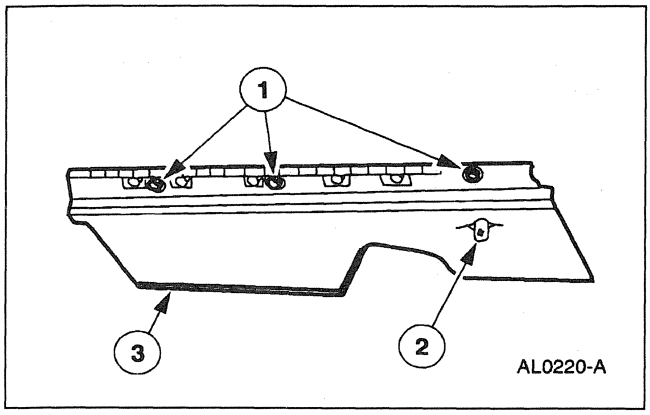

1. Remove the RH instrument panel insulator (046A24).
   1 Remove the screws.
   2 Disconnect the courtesy lamp.
   3 Remove the instrument panel insulator.

REMOVAL AND INSTALLATION (Continued)

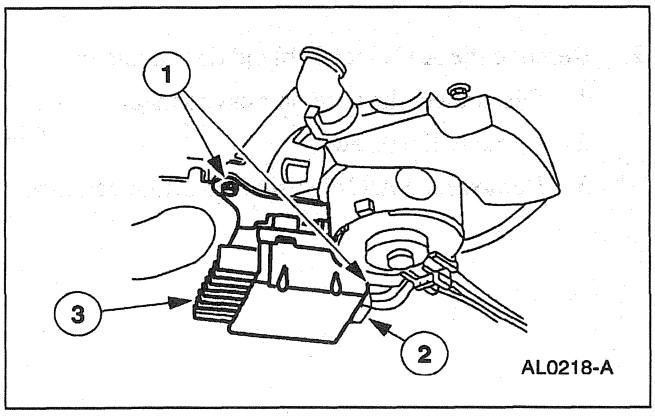

2. Remove the A/C blower motor speed control (19E624).
   1 Remove the screws.
   2 Disconnect the wire harness connectors.
   3 Remove the A/C blower motor speed control.

Installation

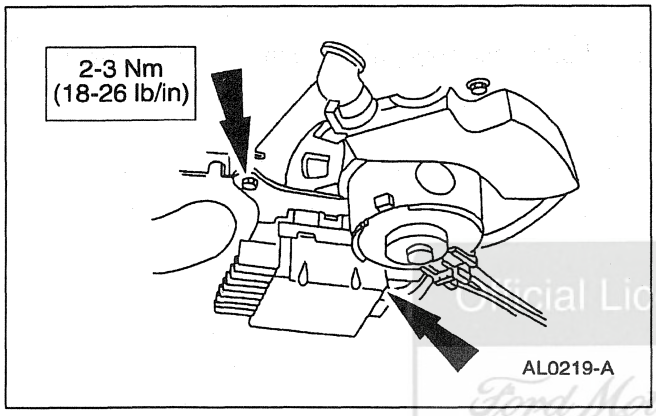

1. Follow the removal procedure in reverse order.

Official Licensed Product
Ford Motor Company

Vacuum Control Motor — Heater Air Damper Door

Removal

1. Remove the instrument panel (04320); refer to Section 501-12.

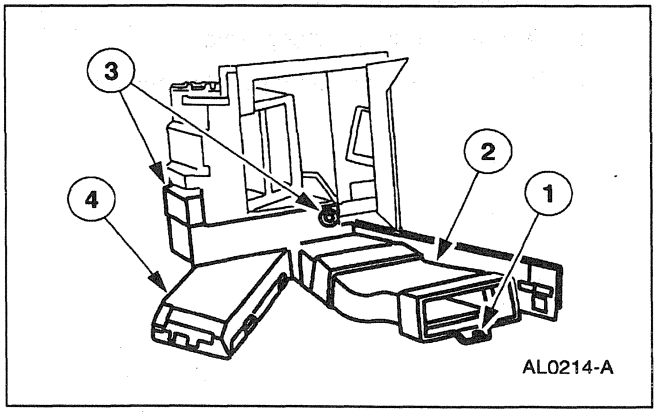

2. Remove the heater outlet floor duct (18C433).
   1 Remove the screw.
   2 Remove the duct extension.
   3 Remove the screws.
   4 Remove the heater outlet floor duct.

REMOVAL AND INSTALLATION (Continued)

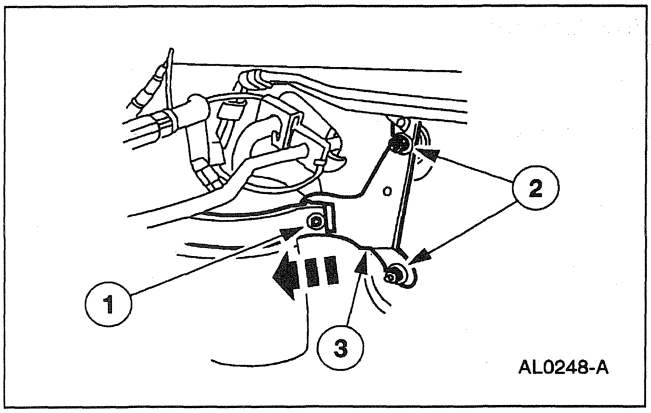

3. Position the A/C accumulator bracket (19D606) away from the cowl.
   1 Loosen the clamp screw.
   2 Remove the nuts.
   3 Rotate the A/C accumulator bracket away from the cowl.

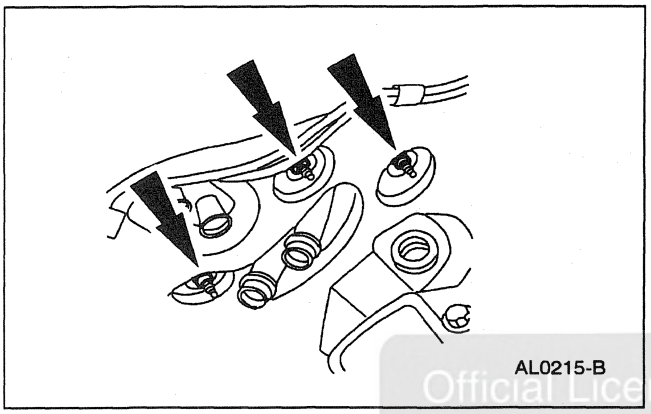

4. Remove the A/C evaporator housing nuts.

Official Licensed Product
Ford Motor Company

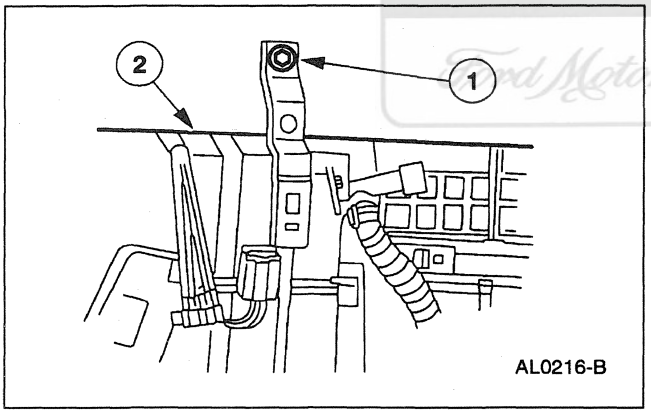

5. Position the A/C evaporator housing (19850) away from the cowl panel.
   1 Remove the screw.
   2 Pull the A/C evaporator housing away from the cowl panel.

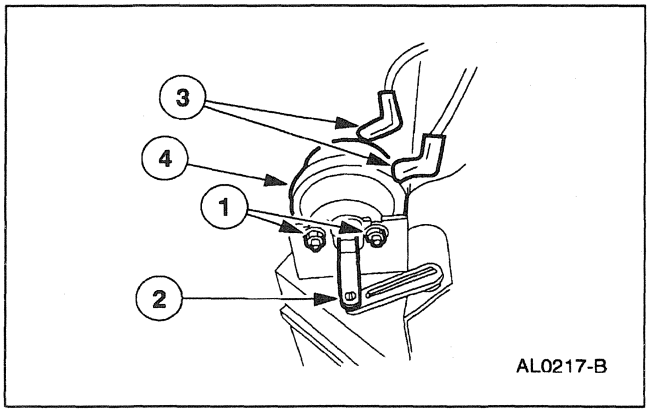

6. Remove the vacuum control motor (18A318).
   1 Remove the nuts.
   2 Disengage the actuator arm from the lever.
   3 Disconnect the vacuum hoses.
   4 Remove the vacuum control motor.

REMOVAL AND INSTALLATION (Continued)

Installation

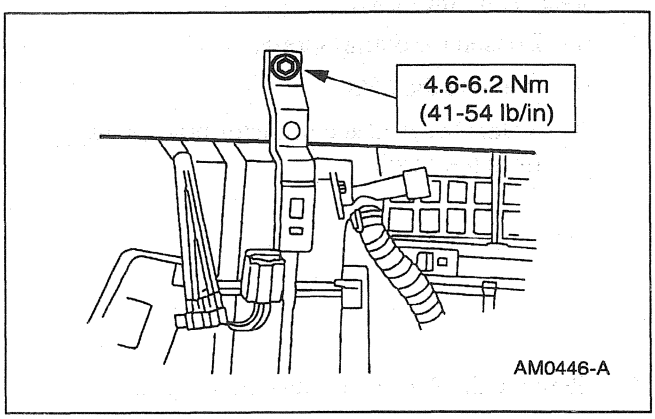

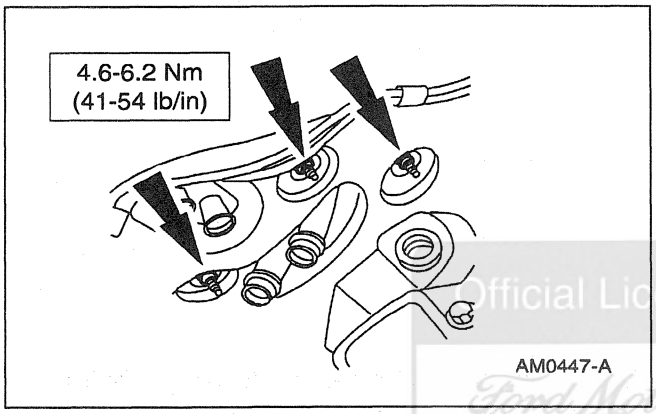

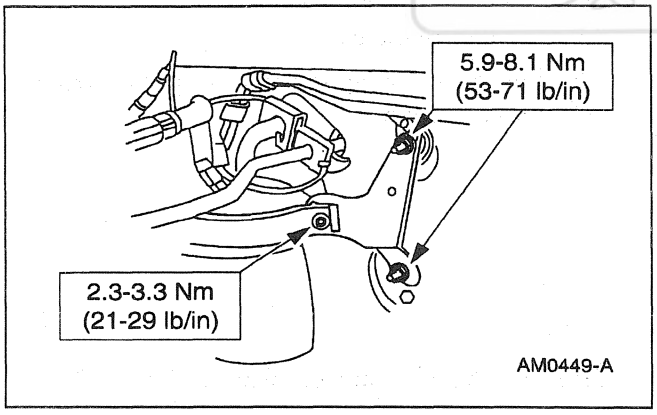

1. Follow the removal procedure in reverse order.

Official Licensed Product
Ford Motor Company

REMOVAL AND INSTALLATION (Continued)

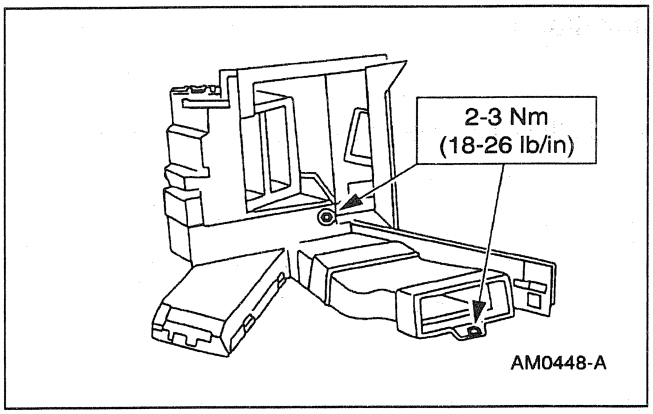

Vacuum Control Motor — Windshield Defroster Door

Removal

1. Remove the instrument panel (04320); refer to Section 501-12.

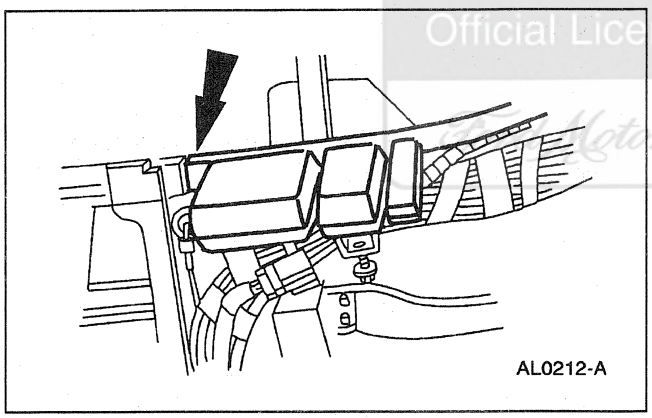

2. Remove the LH A/C side window demister and hose (19E630) from the heater air plenum chamber (18471).

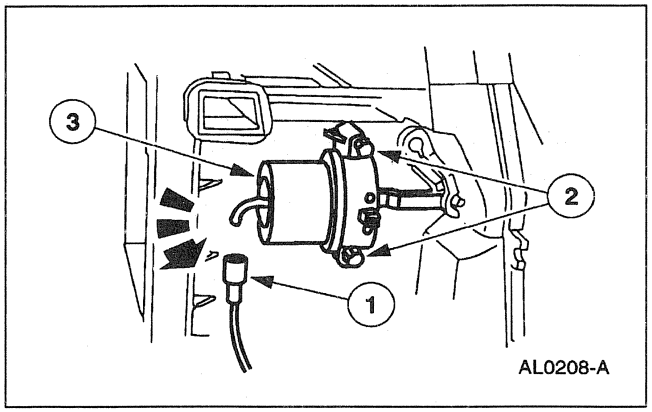

3. ⚠ **CAUTION: Do not attempt to bend any part of the lever. It is brittle and will break.**

   Remove the vacuum control motor (18A31[illegible]).

   1 Disconnect the vacuum hose.

   2 Remove the screws.

   3 Rotate the vacuum control motor and disengage the arm from the pivot shaft.

Official Licensed Product Ford Motor Company

REMOVAL AND INSTALLATION (Continued)

Installation

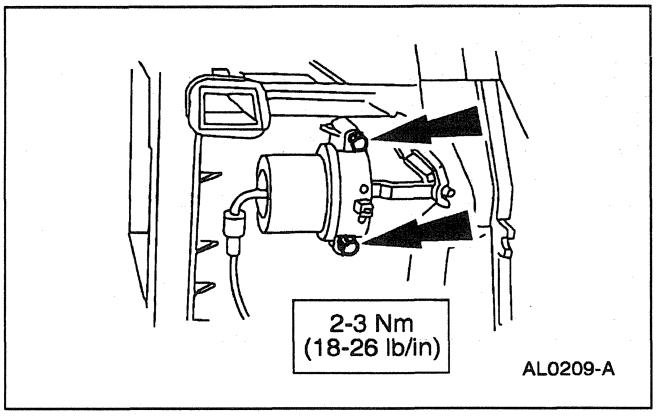

1. Follow the removal procedure in reverse order.

Vacuum Control Motor — Air Inlet Duct Door

Removal

Official Licensed Ford Motor Company

1. Remove the A/C evaporator housing (19850); refer to Section 412-02.

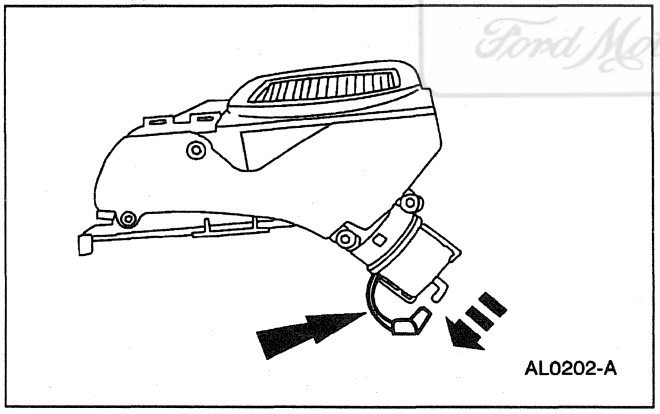

2. Disconnect the vacuum hose from the vacuum control motor (18A318).

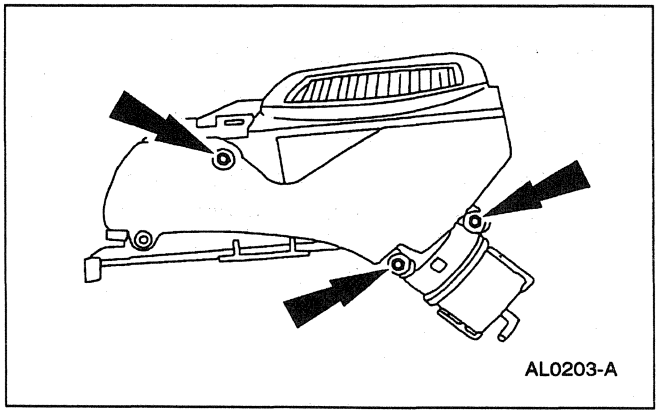

3. Remove the screws and the linkage cover.

REMOVAL AND INSTALLATION (Continued)

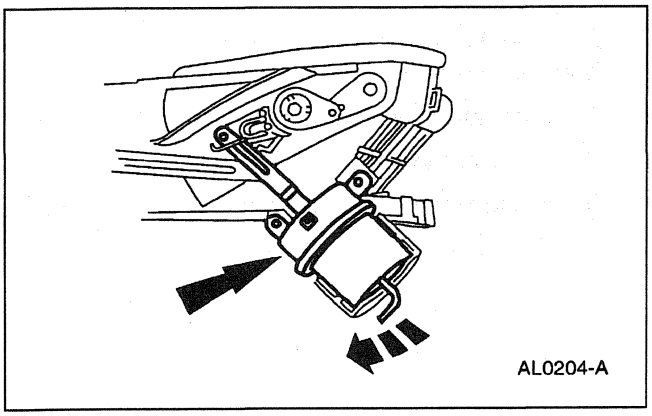

4. ⚠ **CAUTION: Do not attempt to bend any part of the lever. It is brittle and will break.**
   Rotate the vacuum control motor and disengage the arm from the pivot shaft.

Installation

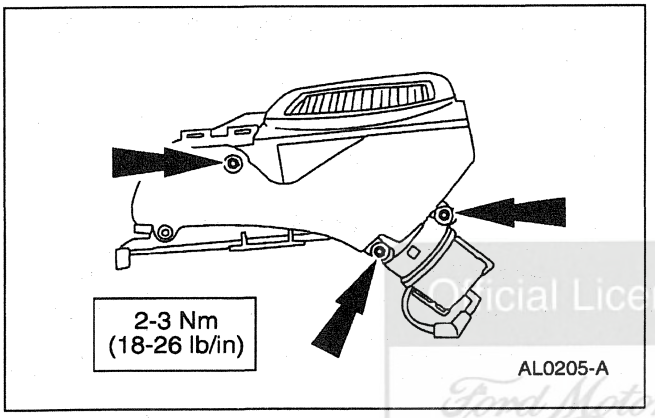

1. Follow the removal procedure in reverse order.

Official Licensed Product
Ford Motor Company

Vacuum Reservoir Tank and Bracket

Removal

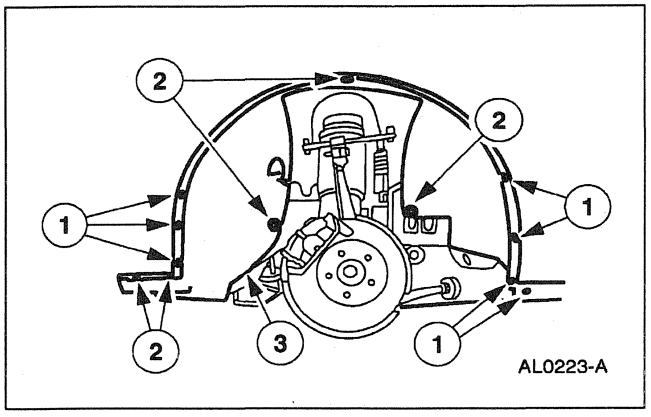

1. Remove the RH front fender splash shield (16102).
   1 Remove the screws.
   2 Remove the pushpins.
   3 Remove the front fender splash shield.

REMOVAL AND INSTALLATION (Continued)

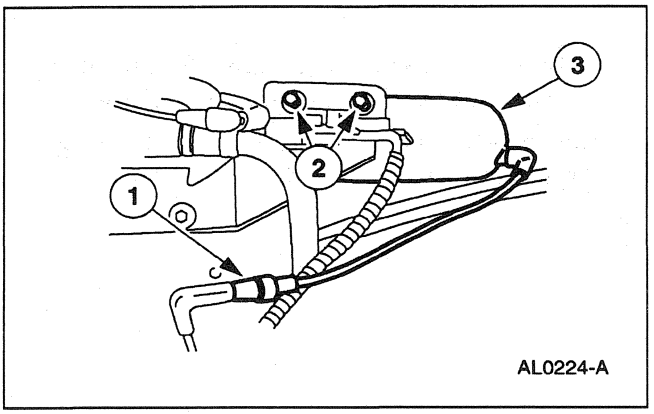

2. Remove the A/C vacuum reservoir tank and bracket (19A566).
   1 Disconnect the vacuum hose.
   2 Remove the screws.
   3 Remove the A/C vacuum reservoir tank and bracket.

Installation

1. Follow the removal procedure in reverse order.

SPECIFICATIONS

Torque Specifications

Description	Nm	Lb/In
Electronic Automatic Temperature Control Module Screws	2-3	18-26
A/C Electric Blend Door Actuator Screws	2-3	18-26
A/C Blower Motor Speed Control Screws	2-3	18-26
Vacuum Control Motor Screws	2-3	18-26
Linkage Cover Screws	2-3	18-26
Evaporator Housing Mounting Bracket to Cowl Screw	4.6-6.2	41-54

(Continued)

Torque Specifications

Description	Nm	Lb/In
Evaporator Housing to Cowl Nuts	4.6-6.2	41-54
Heater Outlet Floor Duct Screws	2-3	18-26
Suction Accumulator/Drier Clamp Screw	2.3-3.3	21-29
Accumulator Mounting Bracket to Cowl Nuts	5.9-8.1	53-71

Official Licensed Reseller

SECTION 413-00 Instrument Cluster and Panel Lighting — General Information

VEHICLE APPLICATION: Mark VIII

SUBJECT **PAGE**

DESCRIPTION AND OPERATION
Instrument Cluster and Panel Lighting 413-00-2
DIAGNOSIS AND TESTING
Instrument Cluster and Panel Lighting 413-00-2
Inspection and Verification 413-00-2
SCIL Active Command Index 413-00-5
SCIL Diagnostic Trouble Code (DTC) Index 413-00-3
SCIL Parameter Identification (PID) Index 413-00-5
Pinpoint Tests 413-00-8
Symptom Chart 413-00-6
REMOVAL AND INSTALLATION
Dimmer Switch — Panel 413-00-17
Illumination Bulb — Climate Control Assembly 413-00-16
Illumination Bulb — Instrument Cluster 413-00-16

Official Licensed Product
Ford Motor Company

DESCRIPTION AND OPERATION

Instrument Cluster and Panel Lighting

The instrument cluster backlighting and panel lighting is controlled through the headlamp switch (11654) and panel dimmer switch. The following are illuminated components under this system:

- Instrument cluster (10849)
- Headlamp switch
- Radio chassis (18806)
- Heated seat control switches
- Electronic automatic climate control (EATC)
- Message center switches
- Rear window defrost control
- Speed control switches
- Ashtray
- Door lock switches
- Power window switches
- Door handles
- Power mirror adjust switches

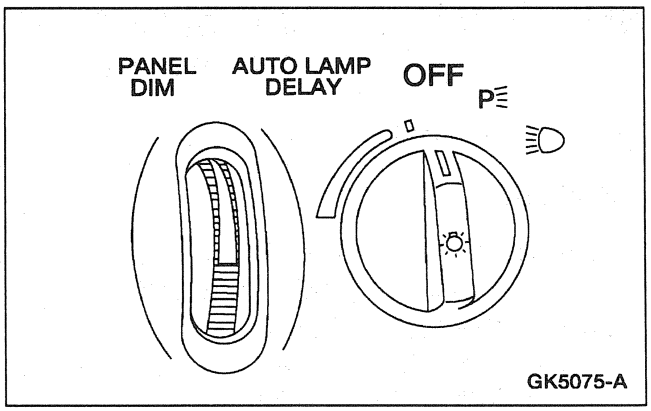

Illumination power is available to these components through circuit 235(R/BK) when the headlamp switch is set to the PARK or HEADLAMP position, or when the autolamp system is active. Intensity for these lamps is adjusted by rotating the PANEL DIM control up or down.

Official Licensed Product
Ford Motor Company

DIAGNOSIS AND TESTING

Instrument Cluster and Panel Lighting

Refer to Electrical and Vacuum Troubleshooting Manual, Cell 71, Instrument Illumination for schematic and connector information.

Special Tool(s)

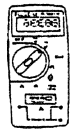 ST1137-A	73 Digital Multimeter or equivalent 105-R0051
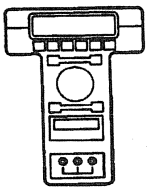 ST1217-A	New Generation STAR (NGS) Tester or equivalent 418-F048 (007-00500)

Inspection and Verification

1. Verify the customer concern by operating the instrument cluster and panel lighting to duplicate the condition.
2. Visually inspect for obvious signs of mechanical and electrical damage. Refer to the following chart:

Visual Inspection Chart

Mechanical	Electrical
• Binding panel dimmer switch. • Damaged steering column/ignition/lighting (SCIL) module	• Fuse • Circuitry • Bulb(s)

DIAGNOSIS AND TESTING (Continued)

3. If the concern remains after the inspection, connect the New Generation STAR (NGS) Tester to the data link connector (DLC) located beneath the instrument panel and select the vehicle to be tested from the NGS menu. If the NGS does not communicate with the vehicle:
   - check that the program card is properly installed.
   - check the connections to the vehicle.
   - check the ignition switch position.
4. If the NGS still does not communicate with the vehicle, refer to the New Generation STAR Tester manual.
5. Perform the DATA LINK DIATNOSTIC TEST. If the NGS responds with:
   - CKT914, CKT915 or CKT70 = ALL ECUS NO RESP/NOT EQUIP, refer to Section 418-00.
   - NO RESP/NOT EQUIP for steering column/ignition/lighting (SCIL) module, go to Pinpoint Test A.
   - SYSTEM PASSED, retrieve and record the continuous diagnostic trouble codes (DTCs), erase the continuous DTCs and perform self-test diagnostics for the SCIL module.
6. If the DTCs retrieved are related to the concern, go to SCIL Diagnostic Trouble Code (DTC) Index to continue diagnostics.
7. If no DTCs related to the concern are retrieved, proceed to Symptom Chart to continue diatnostics.

SCIL Diagnostic Trouble Code (DTC) Index

SCIL Diagnostic Trouble Code (DTC) Index

DTC	Description	DTC Caused By	Action
C1446	Brake Switch Circuit Failure	SCIL	REFER to Section 206-05.
B1246	Panel Dim Potentiometer Switch Circuit Failure	SCIL	REFER to Section 417-02.
B1312	Lamp Headlamp Input Circuit Short to Battery	SCIL	REFER to Section 417-01.
B1334	Luggage Compartment Door Ajar Circuit Short to Ground	SCIL	REFER to Section 417-02.
B1342	ECU is Defective	SCIL	REFER to Section 417-01.
B1353	Ignition Key-In Circuit Open	SCIL	REFER to Section 501-12.
B1360	Ignition Run/ACC Circuit Open	SCIL	REFER to Section 501-12.
B1364	Ignition Run/Start Circuit Open	SCIL	REFER to Section 501-12.
B1446	Wiper Park Sense Circuit Failure	SCIL	REFER to Section 417-01.
B1485	Brake Pedal Input Short to B+	SCIL	REFER to Section 417-01.
B1490	Right Front Door Handle Short to Ground	SCIL	This is an invalid DTC. Do not attempt to repair.
B1498	Luggage Compartment Door Punch Out Sensor Shorted to Ground	SCIL	This is an invalid DTC. Do not attempt to repair.
B1509	Flash-to-Pass Switch Circuit Short to Battery	SCIL	REFER to Section 417-01.
B1522	Hood Switch Circuit Short to Ground	SCIL	REFER to Section 419-01A.
B1562	Door Lock Cylinder Circuit Short to Ground	SCIL	REFER to Section 419-01A.
B1566	Door Ajar Circuit Short to Ground	SCIL	REFER to Section 417-02.
B1600	PATS Ignition Key Transponder Signal Is Not Received	SCIL	REFER to Section 419-01B.

(Continued)

Ford Motor Company Official Licensed Product

DIAGNOSIS AND TESTING (Continued)

SCIL Diagnostic Trouble Code (DTC) Index

DTC	Description	DTC Caused By	Action
B1601	PATS Received Incorrect Key Code From Ignition Key Transponder	SCIL	REFER to Section 419-01B.
B1676	Battery Voltage Out of Range	SCIL	REFER to Section 417-01.
B1682	PATS is Disabled (Check Link Between PATS and Transponder)	SCIL	REFER to Section 419-01B.
B1687	Dome Lamp Input Circuit Short to Battery	SCIL	REFER to Section 417-02.
B1689	Autolamp Delay Circuit Failure	SCIL	REFER to Section 417-01.
B1796	Headlamp Low Beam Circuit Short to Battery	SCIL	REFER to Section 417-01.
B1875	Turn Signal/Hazard Switch Signal Circuit Short to Battery	SCIL	REFER to Section 417-01.
B1980	Bulb Outage Condition Detected	SCIL	REFER to Section 417-01.
B2328	Steering Column Reach Feedback Potentiometer Circuit Failure	SCIL	REFER to Section 211-05.
B2332	Steering Column Tilt Feedback Potentiometer Circuit Failure	SCIL	REFER to Section 211-05.
B2351	Steering Column Switch Signal Circuit Failure	SCIL	REFER to Section 211-05.
U1027	SCP Invalid or Missing Data for Engine RPM	PCM	PERFORM the PCM Self-Test.
U1041	SCP Invalid or Missing Data for Vehicle Speed	ABS	PERFORM the ABS Self-Test.
U1057	SCP Invalid or Missing Data for Vehicle Configuration	SCIL	PERFORM the SCIL Self-Test.
U1059	SCP Invalid or Missing Data for Transmission/Transaxle/PRNDL	PCM	PERFORM the PCM Self-Test.
U1123	SCP Invalid or Missing Data for Odometer	ABS	PERFORM the ABS Self-Test.
U1147	SCP Invalid or Missing Data for Vehicle Security	PCM	PERFORM the PCM Self-Test.
U1180	SCP Invalid or Missing Data for Personalization (Memory) Features	DDM	PERFORM the DDM Self-Test.
U1181	SCP Invalid or Missing Data for Personalization (Memory) Features	DDM	PERFORM the DDM Self-Test.
U1197	SCP Invalid or Missing Data for Door Locks	DDM	PERFORM the DDM Self-Test.
U1198	SCP Invalid or Missing Data for External Access (Doors)	DDM	PERFORM the DDM Self-Test.
U1199	SCP Invalid or Missing Data for External Access (Doors)	DDM	PERFORM the DDM Self-Test.
U1211	SCP Invalid or Missing Data for Restraints	DSM	PERFORM the DSM Self-Test.
U1222	SCP Invalid or Missing Data for Interior Lamps	DDM	PERFORM the DDM Self-Test.

Official Licensed Product
Ford Motor Company

DIAGNOSIS AND TESTING (Continued)

SCIL Parameter Identification (PID) Index

SCIL Parameter Identification Index

PID	Description	Expected Values
CCNTSCI	Number of Continuous DTCs on SCIL	one count per bit
BOO__SCI	Brake Switch Input	ON, OFF
PRK__BRK	Parking Brake Switch Input	ON, OFF
TILT	Steering Column Tilt Switch	SHORT, UP, DOWN, OFF
TELESCP	Steering Column Telescope Switch	SHORT, IN, OUT, OFF
TILTPOS	Tilt Position Sensor	SENSED, notSEN
TELEPOS	Telescope Position Sensor	SENSED, notSEN
TURN__SW	Left and Right Turn Signal Switch	OFF, LEFT, RIGHT, SHORT
LBEAMSW	Low Beam Switch	ON, OFF
HBEAMSW	High Beam Switch	ON, OFF
PARK__SW	Parking Lamp Switch	ON, OFF
LIGHTSN	Ambient Light	DAY, NIGHT
FLASH	Flash to Pass Switch	ON, OFF
FTURN__L	Left and Right Front Turn Lamp	R__OPEN, L__OPEN, L/R__OPEN OK
RTURN__L	Left and Right Rear Turn Lamp	R__OPEN, L__OPEN, L/R__OPEN OK
TAILLMP	Left and Right Tail Lamp	OPEN, OK
LOWBEAM	Low Beam Lamp	R__OPEN, L__OPEN, L/R__OPEN OK
AUTOLMP	Autolamp Switch	ON, OFF
ALP__IMP	Autolamp Analog Input	0-100%
DOMESW	Dome Lamp Switch	ACTIVE, notACT
PANLDIM	Panel Dim Intensity Switch	0-100%
HOOD__SW	Hood Ajar Switch	AJAR, CLOSED
DECKLID	Decklid Ajar Switch	AJAR, CLOSED
P__DR__SW	Passenger Door Ajar Switch	AJAR, CLOSED
IGN__KEY	Ignition Key In/Out	IN, OUT
IGN__SCI	Ignition Switch	START, RUN, OFF, ACCSSY
WPPRKSW	Windshield Wiper Park Sense	notPRK, PARKED
NUMKEYS	Number of Ignition Key Codes Supported	BCD (valid range 0-16)
DRLKCYL	Door Lock Cylinder	ON, OFF
ENABLE	PATS System Status	ON, OFF
FAILSAF	PATS System Status	ON, OFF

SCIL Active Command Index

SCIL Active Command Index

Active Command	Display	Action
PID LATCH	PID LATCH	ON, OFF
ONE TOUCH WINDOW DWN & ACCY DELAY	ACCY RLY	ON, OFF
WARNING LAMPS AND CHIME	CHIME	ON, OFF
	ANTI-THEFT	ON, OFF
	AUTOLMP	ON, OFF

(Continued)

DIAGNOSIS AND TESTING (Continued)

SCIL Active Command Index

Active Command	Display	Action
	HIGH BEAM	ON, OFF
INTERIOR COURTESY LAMPS	INT LAMPS MIRRORLMP	ON, OFF ON, OFF
DECKLID RELEASE	RELEASE	ON, OFF
TURN SIGNAL AND MARKER LAMPS	LF TURN	ON, OFF
	RF TURN	ON, OFF
	LR TURN	ON, OFF
	RR TURN	ON, OFF
	PARKLAMPS	ON, OFF
HEADLAMP CONTROL	LEFT LOW	ON, OFF
	RIGHT LOW	ON, OFF
	HIGH BEAM	ON, OFF
	DRUN LAMP	ON, OFF
	LF CORNER	ON, OFF
	RF CORNER	ON, OFF
HORN CONTROL	HORN	ON, OFF
BACKLIGHTING INTENSITY	INTENSITY	0%-100%
COURTESY LAMP INTENSITY	INTENSITY	0%-100%
DOOR AJAR SIGNAL	DOOR AJAR	ON, OFF
TRANSMIT SIGNAL COMMAND	TRANSMIT	ON, OFF
BRAKE SYSTEM	BRK/SHIFT	ON, OFF
	PARK BRK	ON, OFF
STEERING COLUMN CONTROL	TILT UP	ONE SECOND TIME OUT
	TILT DOWN	ONE SECOND TIME OUT
	TELSCP IN	ONE SECOND TIME OUT
	TELSCPOUT	ONE SECOND TIME OUT
KEYCODE ERASE TIME SET	MINUTES	8-63 MINUTES

Symptom Chart

Symptom Chart

Condition	Possible Source	Action
• No Communication With the Steering Column/Ignition/Lighting Module	• Fuse(s). • Circuitry. • SCIL module.	• GO to Pinpoint Test A.
• The Control Illumination Is Inoperative	• SCIL module. • Headlamp switch. • Panel dimmer switch.	• Go to Pinpoint Test B.
• The Instrument Cluster Illumination Is Inoperative	• Fuse. • Circuitry. • Bulb(s). • SCIL module. • Headlamp switch.	• GO to Pinpoint Test C.

DIAGNOSIS AND TESTING (Continued)

Symptom Chart (Continued)

Condition	Possible Source	Action
• The Climate Control Illumination Is Inoperative	• Fuse. • Circuitry. • Bulb(s). • SCIL module. • Headlamp switch. • Panel dimmer switch. • Electronic automatic temperature control (EATC).	• Go to Pinpoint Test C.
• The Climate Control Illumination Is Inoperative — Uneven	• Bulb(s). • EATC.	• CHECK each EATC bulb. If OK, REPLACE the EATC. TEST the system for normal operation.
• The Audio System Illumination Is Inoperative	• Fuse. • Circuitry. • SCIL module. • Headlamp switch. • Panel dimmer switch. • Audio component.	• Go to Pinpoint Test C.
• A Single Illumination Source Is Inoperative	• Circuitry. • SCIL module. • Headlamp switch. • Panel dimmer switch. • Bulb(s). • Source module.	• Go to Pinpoint Test C.
• The Instrument Panel Illumination Does Not Dim	• Fuse. • Circuitry. • SCIL module. • Headlamp switch. • Panel dimmer switch.	• Go to Pinpoint Test D.

Official Licensed Product Ford Motor Company

DIAGNOSIS AND TESTING (Continued)

Pinpoint Tests

PINPOINT TEST A: NO COMMUNICATION WITH THE STEERING COLUMN/IGNITION/LIGHTING MODULE

TEST CONDITIONS	TEST DETAILS/RESULTS/ACTIONS
A1 CHECK CIRCUIT 875 (BK/LB) FOR OPEN	
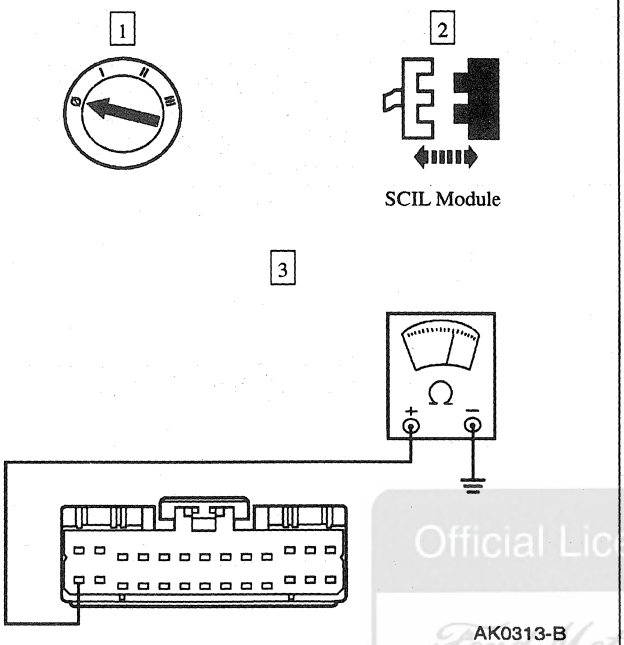	3 Measure the resistance between SCIL module C288-14, circuit 875 (BK/LB), and ground. • Is the resistance less than 5 ohms? → **Yes** GO to **A2**. → **No** REPAIR circuit 875 (BK/LB). TEST the system for normal operation.
A2 CHECK CIRCUIT 57 (BK) FOR OPEN	
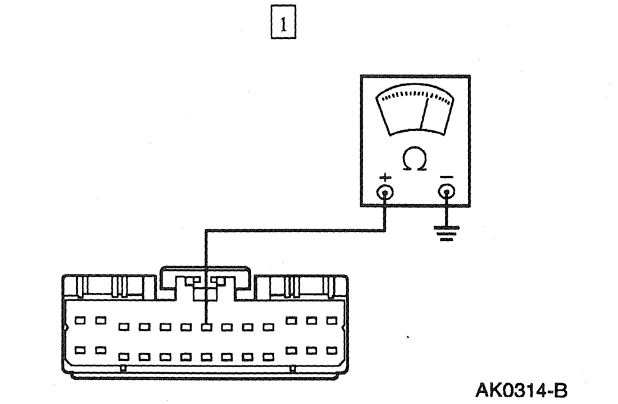	1 Measure the resistance between SCIL module C287-7, circuit 57 (BK), and ground. • Is the resistance less than 5 ohms? → **Yes** GO to **A3**. → **No** REPAIR circuit 57 (BK). TEST the system for normal operation.

(Continued)

Official Licensed Product Ford Motor Company

DIAGNOSIS AND TESTING (Continued)

PINPOINT TEST A: NO COMMUNICATION WITH THE STEERING COLUMN/IGNITION/LIGHTING MODULE (Continued)

TEST CONDITIONS	TEST DETAILS/RESULTS/ACTIONS
A3 CHECK FOR VOLTAGE TO THE SCIL MODULE	
1 	
2 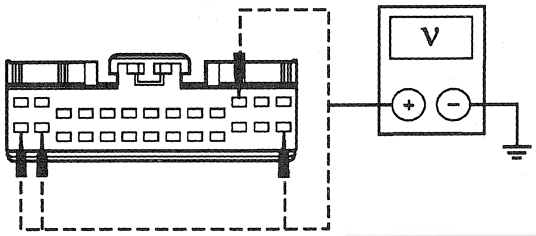 GK4906-A	2 Measure the voltage between the following SCIL module C287 pins and ground: • C287-14, circuit 906 (R/O) • C287-26, circuit 19 (LB/R) • C287-15, circuit 1055 (W/LG) • C287-11, circuit 1056 (DB/LG)
3 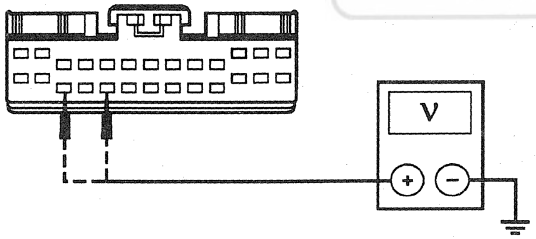 GK4907-A	3 Measure the voltage between the following SCIL module C288 pins and ground: • C288-16, circuit 251 (BR/O) • C288-18, circuit 158 (BK/PK)
4 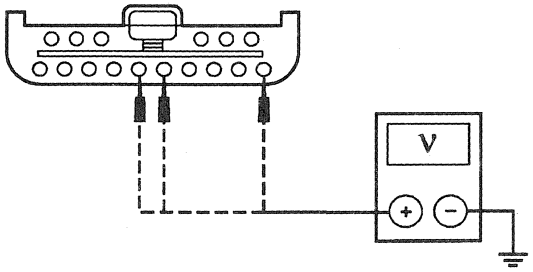 GK4908-A	4 Measure the voltage between the following SCIL module C289 pins and ground: • C289-5, circuit 1058 (BR/W) • C289-6, circuit 1057 (O/BK) • C289-1, circuit 1046 (T) • Are all the voltages greater than 10 volts? → **Yes** REFER to Section 418-00. → **No** REPAIR the circuit in question. TEST the system for normal operation.

Official Licensed Product
Ford Motor Company

DIAGNOSIS AND TESTING (Continued)

PINPOINT TEST B: THE CONTROL ILLUMINATION IS INOPERATIVE

TEST CONDITIONS	TEST DETAILS/RESULTS/ACTIONS
B1 CHECK INSTRUMENT PANEL LAMP DIMMER CONTROL OUTPUT	
1 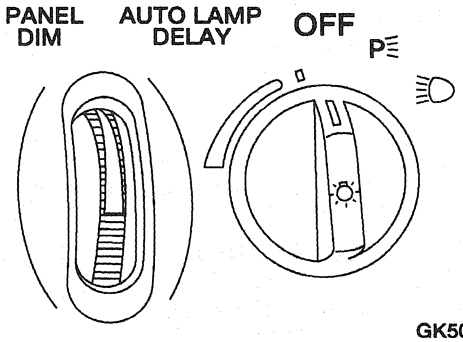 GK5075-A 2 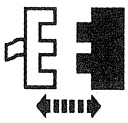 SCIL C286	3 Measure the resistance between steering column/ignition/lighting (SCIL) module C286-8, circuit 632 (GY/O), and ground while rotating the panel dimmer switch. • Does the resistance vary? → **Yes** GO to **B2.** → **No** GO to **B3.**

Official Licensed Product
Ford Motor Co.

(Continued)

DIAGNOSIS AND TESTING (Continued)

PINPOINT TEST B: THE CONTROL ILLUMINATION IS INOPERATIVE (Continued)

TEST CONDITIONS	TEST DETAILS/RESULTS/ACTIONS
B2 CHECK CIRCUIT 235 (R/BK)	
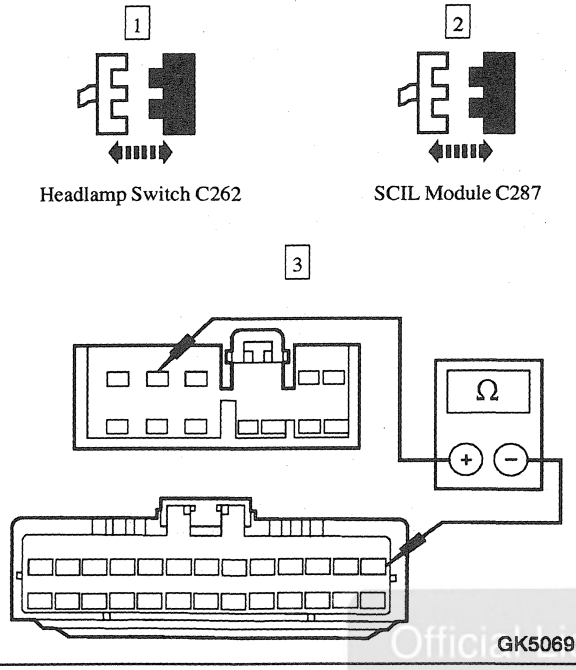	3 Measure the resistance between headlamp switch C262-2, circuit 235 (R/BK); SCIL module C287-13, circuit 235 (R/BK), and ground. • Is the resistance less than 5 ohms? → **Yes** REPAIR circuit 235 (R/BK). TEST the system for normal operation. → **No** REPLACE the SCIL module. TEST the system for normal operation.
B3 CHECK CIRCUIT 632 (GY/O)	
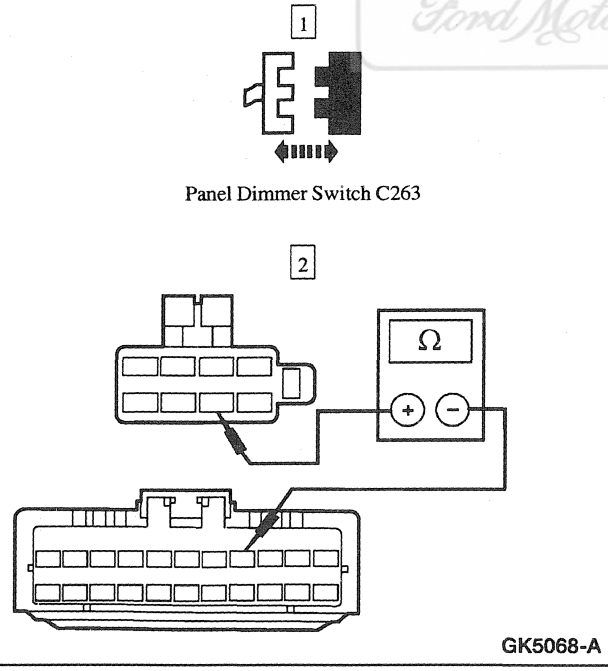	2 Measure the resistance between SCIL module C286-8, circuit 632 (GY/O) and panel dimmer switch C263-8, circuit 632 (GY/O). • Is the resistance less than 5 ohms ? → **Yes** GO to **B4**. → **No** REPAIR circuit 632 (GY/O). TEST the system for normal operation.

Official Licensed Product Ford Motor Company

(Continued)

DIAGNOSIS AND TESTING (Continued)

PINPOINT TEST B: THE CONTROL ILLUMINATION IS INOPERATIVE (Continued)

TEST CONDITIONS	TEST DETAILS/RESULTS/ACTIONS
B4 CHECK CIRCUIT 875 (BK/LB)	
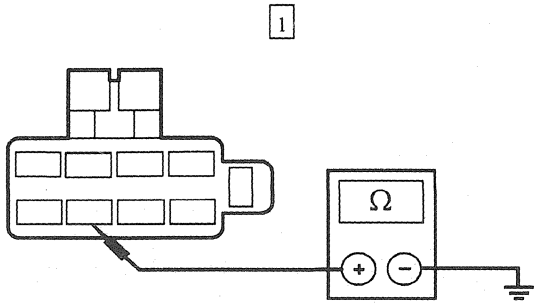 GK5070-A	1 Measure the resistance between panel dimmer switch C263-7, circuit 875 (BK/LB), and ground. • Is the resistance less than 5 ohms ? → **Yes** REPLACE the panel dimmer switch. TEST the system for normal operation. → **No** REPAIR circuit 875(BK/LB). TEST the system for normal operation.

PINPOINT TEST C: A SINGLE ILLUMINATION SOURCE IS INOPERATIVE

TEST CONDITIONS	TEST DETAILS/RESULTS/ACTIONS
C1 VERIFY SINGLE ILLUMINATION SOURCE INOPERATIVE	
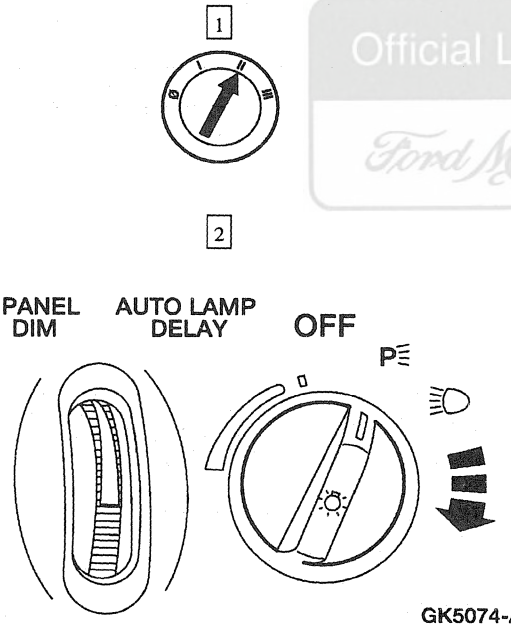 GK5074-A	2 Place the headlamp switch in the PARK position.

Official Licensed Product
Ford Motor Company

(Continued)

DIAGNOSIS AND TESTING (Continued)

PINPOINT TEST C: A SINGLE ILLUMINATION SOURCE IS INOPERATIVE (Continued)

TEST CONDITIONS	TEST DETAILS/RESULTS/ACTIONS
C1 VERIFY SINGLE ILLUMINATION SOURCE INOPERATIVE (Continued)	
3 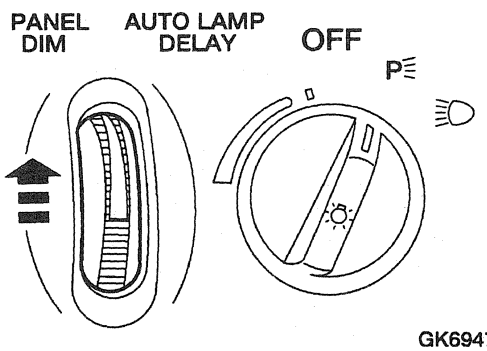 GK6947-A	3 Verify the panel dimmer switch is in maximum brightness position. • Are all single illumination sources illuminated? → **Yes** System is operating normally. → **No** GO to **C2**.
C2 CHECK INOPERATIVE ILLUMINATION SOURCE POWER	
1 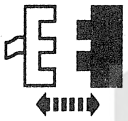 Single Source Connector	2 Measure the voltage between inoperative illumination source connector, circuit 235(R/BK), and ground. • Is the voltage greater than 10 volts? → **Yes** GO to **C3**. → **No** REPAIR circuit 235(R/BK). TEST the system for normal operation.

Official Licensed Product
Ford Motor Company

(Continued)

DIAGNOSIS AND TESTING (Continued)

PINPOINT TEST C: A SINGLE ILLUMINATION SOURCE IS INOPERATIVE (Continued)

TEST CONDITIONS	TEST DETAILS/RESULTS/ACTIONS
C3 CHECK INOPERATIVE ILLUMINATION SOURCE GROUND	
	1 Measure the resistance between inoperative source connector, circuit 57 (BK) and ground. • Is the resistance less than 5 ohms? → **Yes** If inoperative illumination source is door handle, main light switch, ashtray, or electronic automatic temperature control module (EATC), GO to **C4**. Otherwise, REPLACE the component in question. TEST the system for normal operation. → **No** REPAIR circuit 57 (BK). TEST the system for normal operation.
C4 CHECK ILLUMINATION BULB(S)	
1 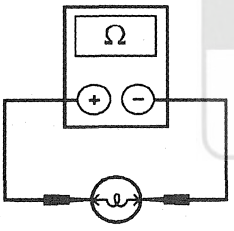 K25961-A	1 Remove and measure for continuity between the terminals of the bulb(s). • Does continuity exist? → **Yes** REPAIR circuit 235(R/BK) to lamp or REPLACE the EATC module. TEST the system for normal operation. → **No** REPLACE the illumination bulb(s). TEST the system for normal operation.

Official Licensed Product
Ford Motor Company

PINPOINT TEST D: THE INSTRUMENT PANEL ILLUMINATION DOES NOT DIM

TEST CONDITIONS	TEST DETAILS/RESULTS/ACTIONS
D1 CHECK CIRCUIT 632 (GY/O) AND CIRCUIT 1035 (O/R) FOR SHORT	
1 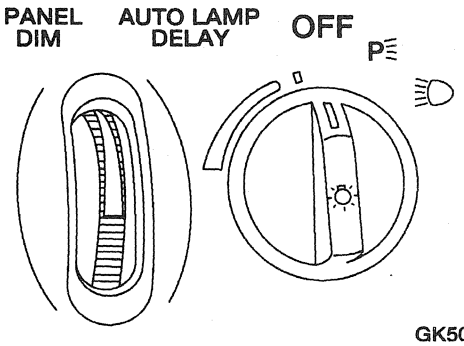 GK5075-A	1 Verify headlamps are OFF.

(Continued)

DIAGNOSIS AND TESTING (Continued)

PINPOINT TEST D: THE INSTRUMENT PANEL ILLUMINATION DOES NOT DIM (Continued)

TEST CONDITIONS	TEST DETAILS/RESULTS/ACTIONS
D1 CHECK CIRCUIT 632 (GY/O) AND CIRCUIT 1035 (O/R) FOR SHORT (Continued)	
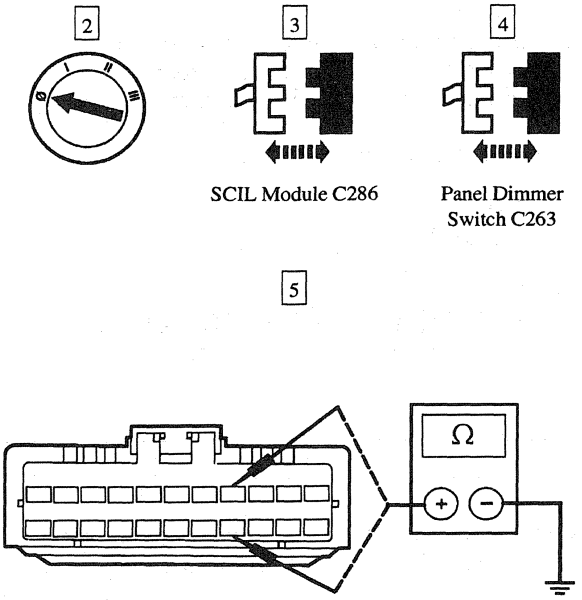	5 Measure the resistance between steering column/ignition/lighting (SCIL) module C286-8, circuit 632 (GY/O); C286-19, circuit 1035(O/R), and ground. • Are the resistances greater than 10,000 ohms? → **Yes** GO to **D2**. → **No** REPAIR the circuit in question. TEST the system for normal operation.
D2 CHECK CIRCUIT 632 (GY/O) FOR OPEN	
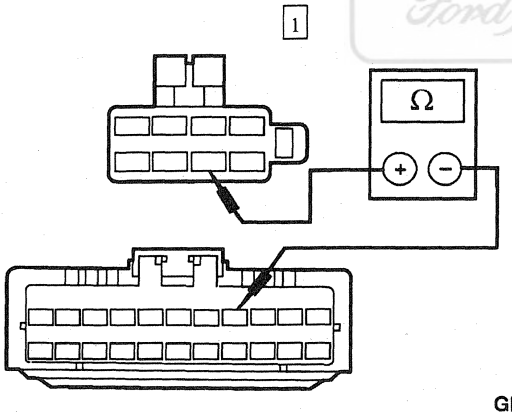	1 Measure the resistance between panel dimmer switch C263-8, circuit 632 (GY/O), and SCIL module C286-8, circuit 632 (GY/O). • Is the resistance less than 5 ohms? → **Yes** GO to **D3**. → **No** REPAIR circuit 632(GY/O). TEST the system for normal operation.

Official Licensed Product
Ford Motor Company

(Continued)

DIAGNOSIS AND TESTING (Continued)

PINPOINT TEST D: THE INSTRUMENT PANEL ILLUMINATION DOES NOT DIM (Continued)

TEST CONDITIONS	TEST DETAILS/RESULTS/ACTIONS
D3 CHECK CIRCUIT 1035 (O/R) FOR OPEN	
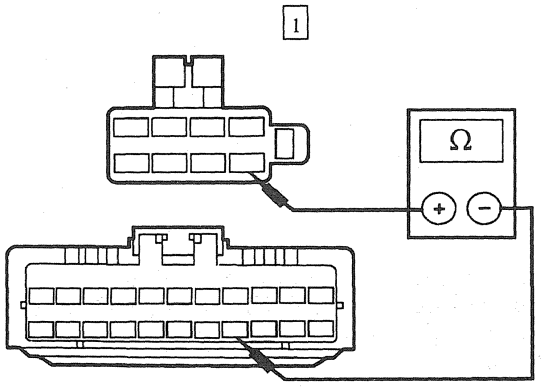 GK5072-A	1 Measure the resistance between SCIL module C286-19, circuit 1035 (O/R) and instrument panel lamp dimmer control C263-9, circuit 1035(O/R). • Is the resistance less than 5 ohms? → **Yes** GO to **D4**. → **No** REPAIR circuit 1035 (O/R). TEST the system for normal operation.
D4 CHECK CIRCUIT 875 (BK/LB)	
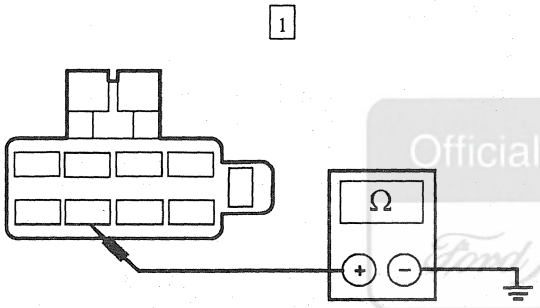 GK5070-A	1 Measure the resistance between panel dimmer switch C263-7, circuit 875 (BK/LB), and ground. • Is the resistance less than 5 ohms? → **Yes** REPLACE the panel dimmer switch. TEST the system for normal operation. → **No** REPAIR circuit 875 (BK/LB). TEST the system for normal operation.

Official Licensed Product
Ford Motor Company

REMOVAL AND INSTALLATION

Illumination Bulb — Instrument Cluster

Removal and Installation

Refer to Section 413-01.

Illumination Bulb — Climate Control Assembly

Removal and Installation

Refer to Section 412-04.

REMOVAL AND INSTALLATION (Continued)

Dimmer Switch — Panel

Removal

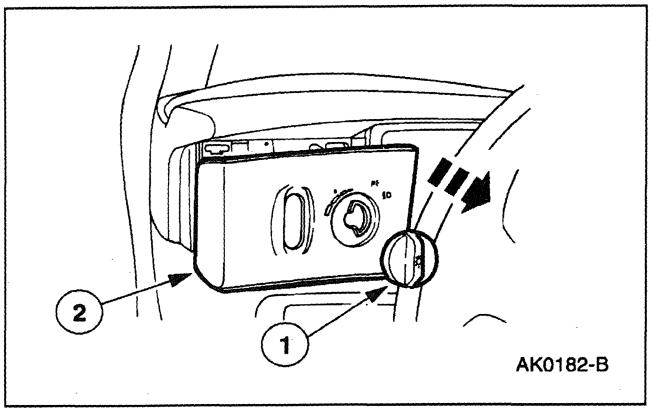

1. Remove the headlamp switch finish panel.
   1 Remove the light switch knob (11666).
   2 Pull the headlamp switch finish panel away from the instrument panel (04320).

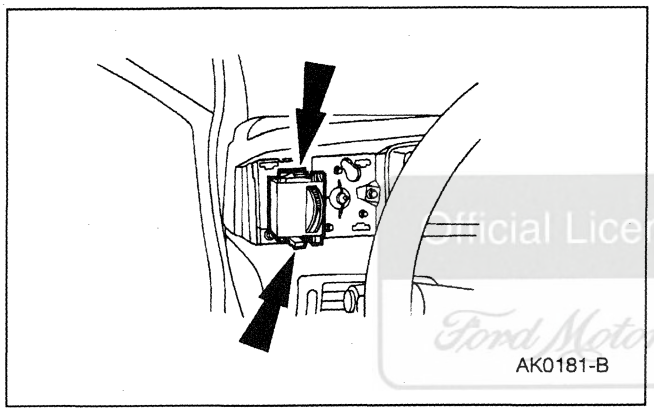

2. Remove the panel dimmer switch.
   1 Release the locking tabs.
   2 Remove the panel dimmer switch from the instrument panel finish panel (044D70).
   3 Disconnect the panel dimmer switch connector.

Official Licensed Product
Ford Motor Company

Installation

1. To install, reverse the removal procedure.

SECTION 413-01 Instrument Cluster

VEHICLE APPLICATION: Mark VIII

SUBJECT	PAGE
DESCRIPTION AND OPERATION	
Instrument Cluster	413-01-2
DIAGNOSIS AND TESTING	
Instrument Cluster	413-01-3
Inspection and Verification	413-01-3
HEC Active Command Index	413-01-8
HEC Diagnostic Trouble Code (DTC) Index	413-01-7
HEC Parameter Identification (PID) Index	413-01-8
SCIL Active Command Index	413-01-6
SCIL Diagnostic Trouble Code (DTC) Index	413-01-4
SCIL Parameter Identification (PID) Index	413-01-5
Pinpoint Tests	413-01-9
Symptom Chart	413-01-8
REMOVAL AND INSTALLATION	
Cluster Lens	413-01-75
Indicator/Warning Bulb	413-01-74
Instrument Cluster	413-01-72
SPECIFICATIONS	413-01-76

Official Licensed Product
Ford Motor Company

DESCRIPTION AND OPERATION

Instrument Cluster

The Hybrid Electronic Cluster (HEC) includes:

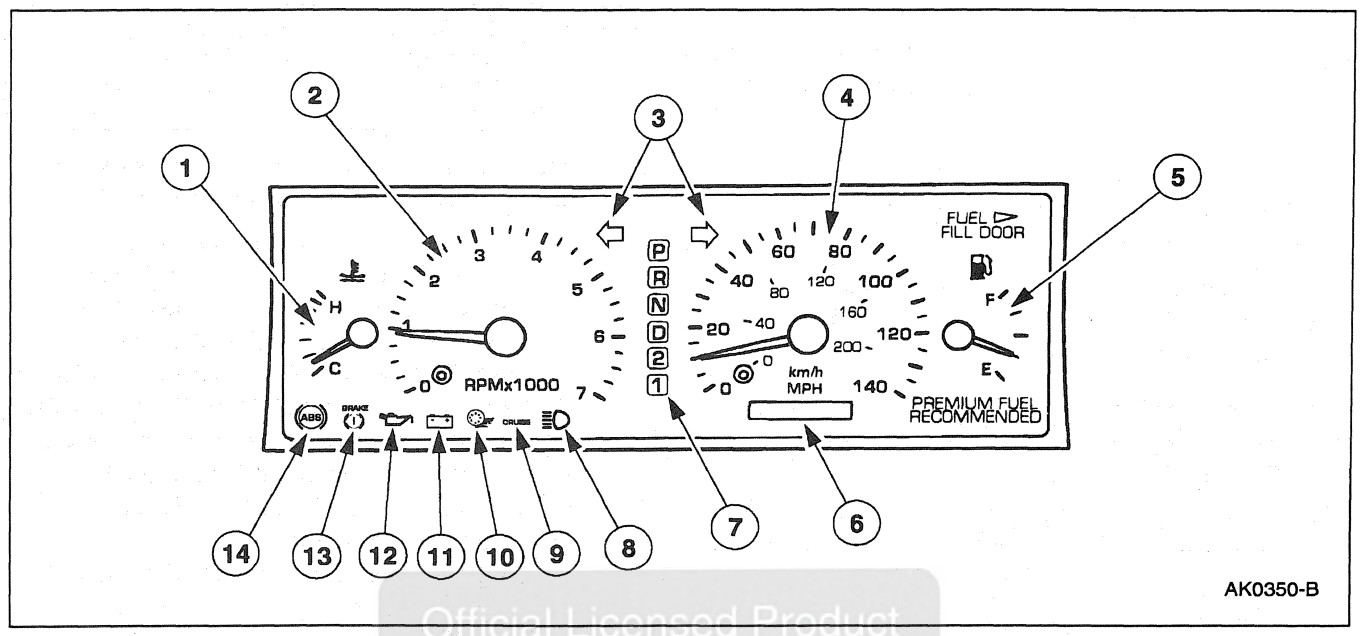

Item	Part Number	Description
1	—	Engine Coolant Temperature Gauge
2	—	Tachometer
3	—	Right and Left Turn Signal Indicators
4	—	Speedometer
5	—	Fuel Gauge
6	—	Electronic Odometer Display
7	—	Transmission Range Indicator
8	—	High Beam Indicator

(Continued)

Item	Part Number	Description
9	—	Cruise On Indicator
10	—	Traction Assist Active Indicator
11	—	Charge System Warning Indicator
12	—	Low Oil Pressure Warning Indicator
13	—	Brake Warning Indicator
14	—	Anti-Lock Brake System (ABS) Warning Indicator

The instrument cluster houses all the gauges and indicator lights. All of the gauges are accessible through the Standard Corporate Protocol (SCP) Network.

When starting the vehicle the low oil pressure indicator, brake warning indicator, anti-lock brake (ABS) warning indicator, and the traction control indicator all go through a 3-second prove out test and all but the low oil pressure indicator are accessible through the SCP Network.

Instrument Cluster Replacement

The instrument cluster is not repairable at the dealership level. The instrument cluster lens and indicator/warning bulbs are the only replaceable parts. When HEC replacement is necessary, contact the Cluster Order System at 1-800-259-9700 (US) or 1-800-663-9974 (Canada).

Official Licensed Product Ford Motor Company

DIAGNOSIS AND TESTING

Instrument Cluster

Refer to Electrical and Vacuum Troubleshooting Manual, Cell 60, Instrument Cluster for schematic and connector information.

Refer to Electrical and Vacuum Troubleshooting Manual, Cell 65, Warning Indicators for schematic and connector information.

Refer to Electrical and Vacuum Troubleshooting Manual, Cell 69, Message Center for schematic and connector information.

Refer to Electrical and Vacuum Troubleshooting Manual, Cell 58, Lighting Control Module for schematic and connector information.

Refer to Electrical and Vacuum Troubleshooting Manual, Cell 31, Speed Control for schematic and connector information.

Special Tool(s)

ST1137-A	73 Digital Multimeter or equivalent 105-R0051
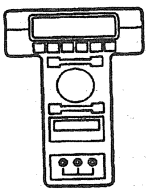 ST1217-A	New Generation Star (NGS) Tester or equivalent 418-F048 (007-00500)

Inspection and Verification

1. Verify the customer concern by operating the instrument cluster (10849) to duplicate the condition by observing the indicators and gauges to determine if they are operating properly with the ignition switch:
   - in RUN with the engine off.
   - in START before the ignition switch is released.
   - in RUN with the engine running.
2. Inspect to determine if any of the following mechanical or electrical concerns apply.

Visual Inspection Chart

Mechanical	Electrical
• Engine coolant level • Accessory drive belt • Engine oil level • Brake fluid level	• Blown fuse • Circuit wiring • Switches or sensors

3. If the inspection reveals obvious concern(s) that can be readily identified, repair as required.
4. If the concern remains after the inspection, connect New Generation Star (NGS) Tester to the data link connector (DLC) located beneath the instrument panel to perform DATA LINK DIAGNOSTIC TEST; refer to Section 418-00. If NGS Tester responds with NO RESPONSE/NOT EQUIPPED for the hybrid electronic instrument cluster (HEC), go to Pinpoint Test A. If NGS Tester responds with NO RESPONSE/NOT EQUIPPED for the steering column/ignition/lighting control (SCIL) module, go to Pinpoint Test B. If the DATA LINK DIAGNOSTIC TEST is passed for the HEC and the SCIL module, retrieve continuous diagnostic trouble codes (DTCs) and execute self-test diagnostics for the HEC and the SCIL module; refer to Section 418-00.
5. If the self-test is passed and no diagnostic trouble codes (DTCs) are retrieved, go to the Symptom Chart to continue diagnostics.
6. If DTCs are retrieved for the hybrid electronic instrument cluster, go to the HEC Diagnostic Trouble Code (DTC) Index to continue diagnostics. If DTCs are retrieved for the steering column/ignition/lighting control module, go to the SCIL Diagnostic Trouble Code (DTC) Index to continue diagnostics.
7. If the HEC cannot be accessed by NGS Tester, go to Pinpoint Test A. If the SCIL module cannot be accessed by NGS Tester, go to Pinpoint Test B.

Official Licensed Ford Motor Company

DIAGNOSIS AND TESTING (Continued)

SCIL Diagnostic Trouble Code (DTC) Index

SCIL Diagnostic Trouble Code (DTC) Index

DTC	Description	DTC Caused By	Action
C1446	Brake Switch Circuit Failure	SCIL	REFER to Section 206-05.
B1246	Panel Dim Potentiometer Switch Circuit Failure	SCIL	REFER to Section 417-02.
B1312	Lamp Headlamp Input Circuit Short to Battery	SCIL	REFER to Section 417-01.
B1334	Luggage Compartment Door Ajar Circuit Short to Ground	SCIL	REFER to Section 417-02.
B1342	ECU is Defective	SCIL	REFER to Section 417-01.
B1353	Ignition Key-In Circuit Open	SCIL	REFER to Section 501-12.
B1360	Ignition Run/ACC Circuit Open	SCIL	REFER to Section 501-12.
B1364	Ignition Run/Start Circuit Open	SCIL	REFER to Section 501-12.
B1446	Wiper Park Sense Circuit Failure	SCIL	REFER to Section 417-01.
B1485	Brake Pedal Input Short to B+	SCIL	REFER to Section 417-01.
B1490	Right Front Door Handle Short to Ground	SCIL	This is an invalid DTC. Do not attempt to repair.
B1498	Luggage Compartment Door Punch Out Sensor Shorted to Ground	SCIL	This is an invalid DTC. Do not attempt to repair.
B1509	Flash-to-Pass Switch Circuit Short to Battery	SCIL	REFER to Section 417-01.
B1522	Hood Switch Circuit Short to Ground	SCIL	REFER to Section 419-01A.
B1562	Door Lock Cylinder Circuit Short to Ground	SCIL	REFER to Section 419-01A.
B1566	Door Ajar Circuit Short to Ground	SCIL	REFER to Section 417-02.
B1600	PATS Ignition Key Transponder Signal Is Not Received	SCIL	REFER to Section 419-01B.
B1601	PATS Received Incorrect Key Code From Ignition Key Transponder	SCIL	REFER to Section 419-01B.
B1676	Battery Voltage Out of Range	SCIL	REFER to Section 417-01.
B1682	PATS is Disabled (Check Link Between PATS and Transponder)	SCIL	REFER to Section 419-01B.
B1687	Dome Lamp Input Circuit Short to Battery	SCIL	REFER to Section 417-02.
B1689	Autolamp Delay Circuit Failure	SCIL	REFER to Section 417-01.
B1796	Headlamp Low Beam Circuit Short to Battery	SCIL	REFER to Section 417-01.
B1875	Turn Signal/Hazard Switch Signal Circuit Short to Battery	SCIL	REFER to Section 417-01.
B1980	Bulb Outage Condition Detected	SCIL	REFER to Section 417-01.
B2328	Steering Column Reach Feedback Potentiometer Circuit Failure	SCIL	REFER to Section 211-05.
B2332	Steering Column Tilt Feedback Potentiometer Circuit Failure	SCIL	REFER to Section 211-05.
B2351	Steering Column Switch Signal Circuit Failure	SCIL	REFER to Section 211-05.
U1027	SCP Invalid or Missing Data for Engine RPM	PCM	PERFORM the PCM Self-Test.

(Continued)

DIAGNOSIS AND TESTING (Continued)

SCIL Diagnostic Trouble Code (DTC) Index

DTC	Description	DTC Caused By	Action
U1041	SCP Invalid or Missing Data for Vehicle Speed	ABS	PERFORM the ABS Self-Test.
U1057	SCP Invalid or Missing Data for Vehicle Configuration	SCIL	PERFORM the SCIL Self-Test.
U1059	SCP Invalid or Missing Data for Transmission/Transaxle/PRNDL	PCM	PERFORM the PCM Self-Test.
U1123	SCP Invalid or Missing Data for Odometer	ABS	PERFORM the ABS Self-Test.
U1147	SCP Invalid or Missing Data for Vehicle Security	PCM	PERFORM the PCM Self-Test.
U1180	SCP Invalid or Missing Data for Personalization (Memory) Features	DDM	PERFORM the DDM Self-Test.
U1181	SCP Invalid or Missing Data for Personalization (Memory) Features	DDM	PERFORM the DDM Self-Test.
U1197	SCP Invalid or Missing Data for Door Locks	DDM	PERFORM the DDM Self-Test.
U1198	SCP Invalid or Missing Data for External Access (Doors)	DDM	PERFORM the DDM Self-Test.
U1199	SCP Invalid or Missing Data for External Access (Doors)	DDM	PERFORM the DDM Self-Test.
U1211	SCP Invalid or Missing Data for Restraints	DSM	PERFORM the DSM Self-Test.
U1222	SCP Invalid or Missing Data for Interior Lamps	DDM	PERFORM the DDM Self-Test.

Official Licensed Product
Ford Motor Company

SCIL Parameter Identification (PID) Index

SCIL Parameter Identification Index

PID	Description	Expected Values
CCNTSCI	Number of Continuous DTCs on SCIL	one count per bit
BOO__SCI	Brake Switch Input	ON, OFF
PRK__BRK	Parking Brake Switch Input	ON, OFF
TILT	Steering Column Tilt Switch	SHORT, UP, DOWN, OFF
TELESCP	Steering Column Telescope Switch	SHORT, IN, OUT, OFF
TILTPOS	Tilt Position Sensor	SENSED, notSEN
TELEPOS	Telescope Position Sensor	SENSED, notSEN
TURN__SW	Left and Right Turn Signal Switch	OFF, LEFT, RIGHT, SHORT
LBEAMSW	Low Beam Switch	ON, OFF
HBEAMSW	High Beam Switch	ON, OFF
PARK__SW	Parking Lamp Switch	ON, OFF
LIGHTSN	Ambient Light	DAY, NIGHT
FLASH	Flash to Pass Switch	ON, OFF
FTURN__L	Left and Right Front Turn Lamp	R__OPEN, L__OPEN, L/R__OPEN OK
RTURN__L	Left and Right Rear Turn Lamp	R__OPEN, L__OPEN, L/R__OPEN OK
TAILLMP	Left and Right Tail Lamp	OPEN, OK
LOWBEAM	Low Beam Lamp	R__OPEN, L__OPEN, L/R__OPEN OK
AUTOLMP	Autolamp Switch	ON, OFF

(Continued)

DIAGNOSIS AND TESTING (Continued)

SCIL Parameter Identification Index

PID	Description	Expected Values
ALP__IMP	Autolamp Analog Input	0-100%
DOMESW	Dome Lamp Switch	ACTIVE, notACT
PANLDIM	Panel Dim Intensity Switch	0-100%
HOOD__SW	Hood Ajar Switch	AJAR, CLOSED
DECKLID	Decklid Ajar Switch	AJAR, CLOSED
P__DR__SW	Passenger Door Ajar Switch	AJAR, CLOSED
IGN__KEY	Ignition Key In/Out	IN, OUT
IGN__SCI	Ignition Switch	START, RUN, OFF, ACCSSY
WPPRKSW	Windshield Wiper Park Sense	notPRK, PARKED
NUMKEYS	Number of Ignition Key Codes Supported	BCD (valid range 0-16)
DRLKCYL	Door Lock Cylinder	ON, OFF
ENABLE	PATS System Status	ON, OFF
FAILSAF	PATS System Status	ON, OFF

SCIL Active Command Index

SCIL Active Command Index

Active Command	Display	Action
PID LATCH	PID LATCH	ON, OFF
ONE TOUCH WINDOW DWN & ACCY DELAY	ACCY RLY	ON, OFF
WARNING LAMPS AND CHIME	CHIME	ON, OFF
	ANTI-THEFT	ON, OFF
	AUTOLMP	ON, OFF
	HIGH BEAM	ON, OFF
INTERIOR COURTESY LAMPS	INT LAMPS MIRRORLMP	ON, OFF ON, OFF
DECKLID RELEASE	RELEASE	ON, OFF
TURN SIGNAL AND MARKER LAMPS	LF TURN	ON, OFF
	RF TURN	ON, OFF
	LR TURN	ON, OFF
	RR TURN	ON, OFF
	PARKLAMPS	ON, OFF
HEADLAMP CONTROL	LEFT LOW	ON, OFF
	RIGHT LOW	ON, OFF
	HIGH BEAM	ON, OFF
	DRUN LAMP	ON, OFF
	LF CORNER	ON, OFF
	RF CORNER	ON, OFF
HORN CONTROL	HORN	ON, OFF
BACKLIGHTING INTENSITY	INTENSITY	0%-100%
COURTESY LAMP INTENSITY	INTENSITY	0%-100%
DOOR AJAR SIGNAL	DOOR AJAR	ON, OFF
TRANSMIT SIGNAL COMMAND	TRANSMIT	ON, OFF

(Continued)

DIAGNOSIS AND TESTING (Continued)

SCIL Active Command Index

Active Command	Display	Action
BRAKE SYSTEM	BRK/SHIFT	ON, OFF
	PARK BRK	ON, OFF
STEERING COLUMN CONTROL	TILT UP	ONE SECOND TIME OUT
	TILT DOWN	ONE SECOND TIME OUT
	TELSCP IN	ONE SECOND TIME OUT
	TELSCPOUT	ONE SECOND TIME OUT
KEYCODE ERASE TIME SET	MINUTES	8-63 MINUTES

HEC Diagnostic Trouble Code (DTC) Index

HEC Diagnostic Trouble Code (DTC) Index

DTC	Description	DTC caused by	Action
B1342	ECU Is Defective	HEC	GO to Pinpoint Test DTC B1342.
B1676	Battery Voltage Out of Range	HEC	GO to Pinpoint Test DTC B1676.
U1027	SCP (J1850) Invalid or Missing Data for Engine RPM	PCM	This DTC may be set due to cycling of the ignition switch. If DTC U1027 is not also retrieved from the steering column/ignition/lighting control module, the DTC is invalid; do not repair. PERFORM the PCM Self-Test.
U1041	SCP (J1850) Invalid or Missing Data for Vehicle Speed	ABS/ TC	PERFORM the ABS Self-Test. PERFORM the TC Self-Test.
U1051	SCP (J1850) Invalid or Missing Data for Brakes	ABS/ TC	PERFORM the ABS Self-Test. PERFORM the TC Self-Test.
U1059	SCP (J1850) Invalid or Missing Data for Transmission/Transaxle/PRNDL	PCM	This DTC may be set due to cycling of the ignition switch. If DTC U1059 is not also retrieved from the steering column/ignition/lighting control module, the DTC is invalid; do not repair. PERFORM the PCM Self-Test.
U1073	SCP (J1850) Invalid or Missing Data for Engine Coolant	PCM	PERFORM the PCM Self-Test.
U1123	SCP (J1850) Invalid or Missing Data for Odometer	ABS/ TC	PERFORM the ABS Self-Test. PERFORM the TC Self-Test.
U1131	SCP (J1850) Invalid or Missing Data for Fuel System	MC	PERFORM the SCIL Self-Test. PERFORM the MC Self-Test.
U1136	SCP (J1850) Invalid or Missing Data for Telltales	ABS/ TC	PERFORM the ABS Self-Test. PERFORM the TC Self-Test.
U1222	SCP (J1850) Invalid or Missing Data for Interior Lamps	SCIL	PERFORM the SCIL Self-Test. PERFORM the MC Self-Test.

Official Licensed Pr
Ford Motor Company

DIAGNOSIS AND TESTING (Continued)

HEC Parameter Identification (PID) Index

HEC Parameter Identification (PID) Index

PID	Description	Expected Values
CCNTHEC	Number of Continuous DTCs on HEC	one count per bit
ODOMETR	Vehicle Odometer	.002 miles per count
VBAT__EC	System Battery Voltage Potential	o.k., Under voltage, Over voltage

HEC Active Command Index

HEC Active Command Index

Active Command	Display	Action
	PARK	ON, OFF
	REV	ON, OFF
	NEUT	ON, OFF
	DRV	ON, OFF
	LOW2	ON, OFF
	LOW1	ON, OFF
	ABS LAMP	ON, OFF
	BRK WARN	ON, OFF
	ACTIVELMP	ON, OFF
DISPLAY SEGMENT CONTROL	SEGMENTS	ON, OFF

Symptom Chart

Symptom Chart

Condition	Possible Source	Action
• No Communication With the Hybrid Electronic Instrument Cluster	• Hybrid electronic instrument cluster (HEC). • Circuitry.	• GO to Pinpoint Test A.
• No Communication With the Steering Column/Ignition/Lighting Control Module	• Steering column/ignition/lighting control (SCIL) module. • Circuitry.	• GO to Pinpoint Test B.
• Incorrect Fuel Gauge Indication	• Message center indicator module. • HEC. • Fuel pump module. • Circuitry.	• GO to Pinpoint Test C.
• Gauge Inaccurate — Engine Coolant Temperature	• HEC. • Engine coolant temperature sensor. • Circuitry.	• GO to Pinpoint Test D.
• Indicator Inoperative/Always On — Low Oil Pressure Warning	• HEC. • Oil pressure switch. • Circuitry.	• GO to Pinpoint Test E.
• Gauge Inaccurate — Speedometer	• HEC. • Anti-lock brake control module. • Circuitry.	• GO to Pinpoint Test F.
• The Speed Control Indicator Is Never/Always On	• HEC. • Speed control module. • Circuitry.	• GO to Pinpoint Test G.
• Incorrect Tachometer Indication	• HEC. • Powertrain control module. • Circuitry.	• GO to Pinpoint Test H.

Official Ford Product
Motorcraft Company

DIAGNOSIS AND TESTING (Continued)

Symptom Chart (Continued)

Condition	Possible Source	Action
• The BRAKE Warning Indicator Is Never/Always On	• HEC. • SCIL module. • Brake fluid level switch. • Parking brake system. • Circuitry.	• GO to Pinpoint Test J.
• The Charge System Warning Indicator Is Never/Always On	• HEC. • Generator. • Circuitry.	• GO to Pinpoint Test K.
• Indicator Inoperative/Always On — Anti-Lock Brake Warning	• HEC. • Anti-lock brake control module. • Circuitry.	• REFER to Section 206-09.
• Indicator Inoperative/Always On — Traction Control Active	• HEC. • Anti-lock brake control module. • Circuitry.	• REFER to Section 206-09.
• The Transmission Range Indicator Is Never/Always On	• HEC. • Circuitry.	• GO to Pinpoint Test L.
• An Indicator Is Inoperative — LH Turn	• HEC. • SCIL module. • Circuitry.	• GO to Pinpoint Test M.
• An Indicator Is Inoperative — RH Turn	• HEC. • SCIL module. • Circuitry.	• GO to Pinpoint Test N.
• An Indicator Is Inoperative — High Beam	• HEC. • SCIL module. • Circuitry.	• GO to Pinpoint Test P.
• An Indicator Is Always On — High Beam	• SCIL module. • Circuitry.	• GO to Pinpoint Test Q.

Officially Licensed Product
Ford Motor Company

Pinpoint Tests

PINPOINT TEST DTC B1342: ECU IS DEFECTIVE

TEST CONDITIONS	TEST DETAILS/RESULTS/ACTIONS
B1342-1 REPEAT THE SELF-TEST	
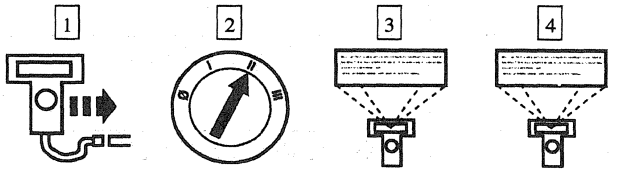	• Is DTC B1342 retrieved? → **Yes** REPLACE the hybrid electronic instrument cluster (HEC). RETEST the system. → **No** REPAIR any retrieved DTCs. RETEST the system.

DIAGNOSIS AND TESTING (Continued)

PINPOINT TEST DTC B1676: BATTERY VOLTAGE OUT OF RANGE

TEST CONDITIONS	TEST DETAILS/RESULTS/ACTIONS
B1676-1 CHECK THE BATTERY VOLTAGE	
1 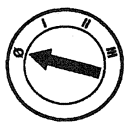 2 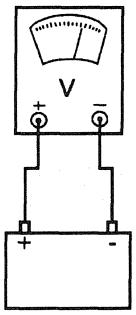 AH0206-A	2 Connect a voltmeter between the positive and negative posts of the battery. • Is the voltage less than 10 volts? → **Yes** REPAIR the battery or the charging system. REFER to Section 414-00. → **No** GO to **B1676-2.**
B1676-2 CHECK THE CHARGING SYSTEM	
1 3 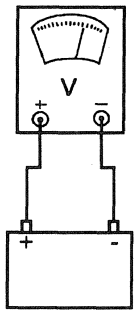 AH0206-A	2 Increase the engine speed to 2000 RPM. 3 Connect a voltmeter between the positive and negative posts of the battery. • Is the voltage over 16 volts? → **Yes** REPAIR the battery or the charging system. REFER to Section 414-00. → **No** GO to **B1676-3.**

Official Licensed Product
Ford Motor Company

(Continued)

DIAGNOSIS AND TESTING (Continued)

PINPOINT TEST DTC B1676: BATTERY VOLTAGE OUT OF RANGE (Continued)

TEST CONDITIONS	TEST DETAILS/RESULTS/ACTIONS
B1676-3 CHECK THE GROUND	
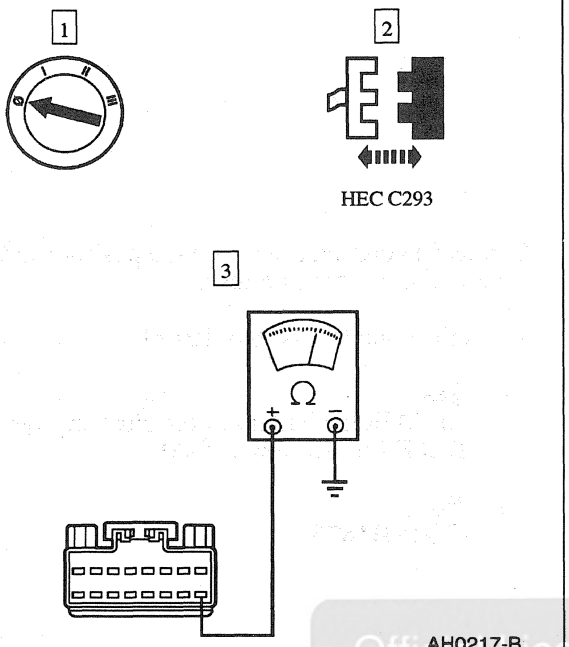	3 Connect an ohmmeter between HEC C293-21, Circuit 57 (BK) and ground. • Is the resistance 5 ohms or less on both circuits? → **Yes** CHECK the HEC for loose or damaged connection. CLEAR DTCs. RETEST the system. → **No** REPAIR circuit 57 (BK). RETEST the system.

Official Licensed Product
Ford Motor Company

PINPOINT TEST A: NO COMMUNICATION WITH THE HYBRID ELECTRONIC INSTRUMENT CLUSTER

TEST CONDITIONS	TEST DETAILS/RESULTS/ACTIONS
A1 CHECK THE B+ SUPPLY	
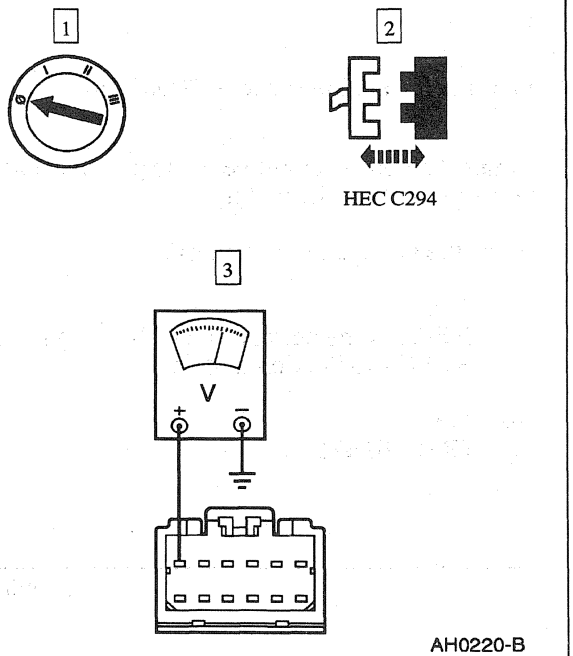	3 Connect a voltmeter between HEC C294-6, Circuit 973 (R), and ground. • Is the voltage reading B+? → **Yes** GO to **A5**. → **No** GO to **A2**.

(Continued)

DIAGNOSIS AND TESTING (Continued)

PINPOINT TEST A: NO COMMUNICATION WITH THE HYBRID ELECTRONIC INSTRUMENT CLUSTER (Continued)

TEST CONDITIONS	TEST DETAILS/RESULTS/ACTIONS
A2 CHECK THE FUSE JUNCTION PANEL FUSE 20 (10A)	
1 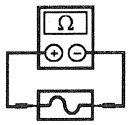 Fuse Junction Panel Fuse 20 (10A)	• Is the fuse OK? → **Yes** REPAIR Circuit 973 (R). RETEST the system. → **No** GO to **A3**.
A3 CHECK CIRCUIT 973 (R) FOR A SHORT	
1 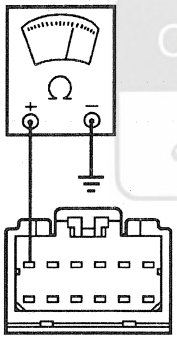 AH0218-B	1 Connect an ohmmeter between HEC C294-6, Circuit 973 (R) and ground. • Is the resistance 10 kohms or less? → **Yes** GO to **A4**. → **No** REPLACE Fuse 20 (10A). RETEST the system. If Fuse 20 (10A) fails again, REPAIR the HEC.

Official Licensed Product
Ford Motor Company

(Continued)

DIAGNOSIS AND TESTING (Continued)

PINPOINT TEST A: NO COMMUNICATION WITH THE HYBRID ELECTRONIC INSTRUMENT CLUSTER (Continued)

TEST CONDITIONS	TEST DETAILS/RESULTS/ACTIONS
A4 CHECK THE MESSAGE CENTER INDICATOR MODULE FOR SHORT	
1 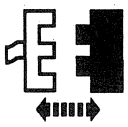 Message Center Indicator Module C208 2 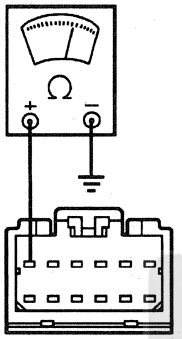 AH0218-B	2 Connect an ohmmeter between HEC C294-6, Circuit 973 (R) and ground. • Is the resistance 10 kohms or less? → **Yes** REPAIR Circuit 973 (R). TEST the system for normal operation. → **No** REPLACE the message center indicator module; refer to Section 413-08. RETEST the system.
A5 CHECK CIRCUIT 298 (P/O)	
1 2 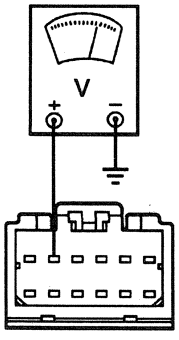 AH0221-B	2 Connect a voltmeter between HEC C294-5, Circuit 298 (P/O), and ground. • Is the voltage reading B+? → **Yes** GO to **A10**. → **No** GO to **A6**.

Official Licensed Product
Ford Motor Company

(Continued)

DIAGNOSIS AND TESTING (Continued)

PINPOINT TEST A: NO COMMUNICATION WITH THE HYBRID ELECTRONIC INSTRUMENT CLUSTER (Continued)

TEST CONDITIONS	TEST DETAILS/RESULTS/ACTIONS
A6 CHECK FUSE JUNCTION PANEL FUSE 5 (15A)	
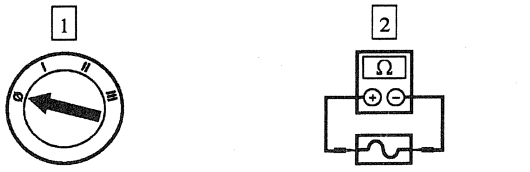 Fuse Junction Panel Fuse 5 (15A)	• Is the fuse OK? → **Yes** REPAIR Circuit 298 (P/O). RETEST the system. → **No** GO to **A7**.
A7 CHECK THE SYSTEM FOR A SHORT	
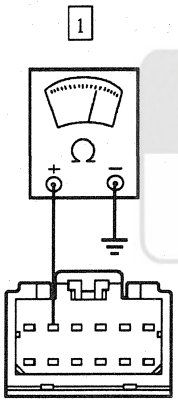 AH0219-B	1 Connect an ohmmeter between HEC C294-5, Circuit 298 (P/O) and ground. • Is the resistance 10 kohms or less? → **Yes** GO to **A8**. → **No** REPLACE fuse junction panel fuse 5 (15A). RETEST the system. If the fuse opens again, REPAIR the HEC.

Official Licensed Product
Ford Motor Company

(Continued)

DIAGNOSIS AND TESTING (Continued)

PINPOINT TEST A: NO COMMUNICATION WITH THE HYBRID ELECTRONIC INSTRUMENT CLUSTER (Continued)

TEST CONDITIONS	TEST DETAILS/RESULTS/ACTIONS
A8 CHECK THE INDICATOR LAMP MODULE FOR A SHORT	
1 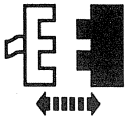 Indicator Lamp Module C238 2 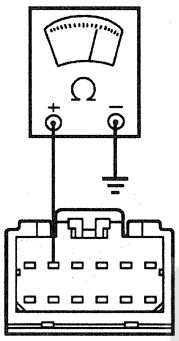 AH0219-B	2 Connect an ohmmeter between HEC C294-5, Circuit 298 (P/O) and ground. • Is the resistance 10 kohms or less? → **Yes** GO to **A9**. → **No** REPLACE the indicator lamp module; refer to Section 413-08. RETEST the system.
A9 CHECK THE CENTER CONSOLE TRANSMISSION RANGE INDICATOR FOR A SHORT	
1 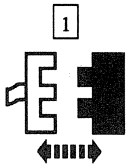 Center Console Transmission Range Indicator C319 2 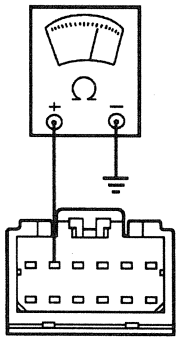 AH0219-B	2 Connect an ohmmeter between HEC C294-5, Circuit 298 (P/O) and ground. • Is the resistance 10 kohms or less? → **Yes** REPAIR Circuit 298 (P/O) for a short to ground. TEST the system for normal operation. → **No** REPLACE the center console transmission range indicator; refer to Section 307-05. RETEST the system.

Official Licensed Product
Ford Motor Company

(Continued)

DIAGNOSIS AND TESTING (Continued)

PINPOINT TEST A: NO COMMUNICATION WITH THE HYBRID ELECTRONIC INSTRUMENT CLUSTER (Continued)

TEST CONDITIONS	TEST DETAILS/RESULTS/ACTIONS
A10 CHECK CIRCUIT 57 (BK)	
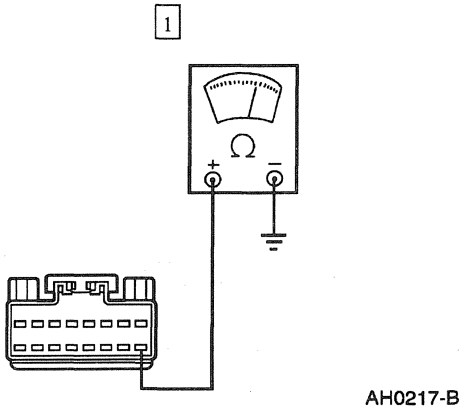 AH0217-B	1 Connect an ohmmeter between HEC C293-21, Circuit 57 (BK) and ground. • Is the resistance 5 ohms or less? → **Yes** REFER to Section 418-00. → **No** REPAIR Circuit 57 (BK). RETEST the system.

PINPOINT TEST B: NO COMMUNICATION WITH THE STEERING COLUMN/IGNITION/LIGHTING CONTROL MODULE

TEST CONDITIONS	TEST DETAILS/RESULTS/ACTIONS
B1 CHECK CIRCUIT 875 (BK/LB)	
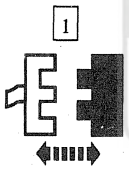 SCIL C288 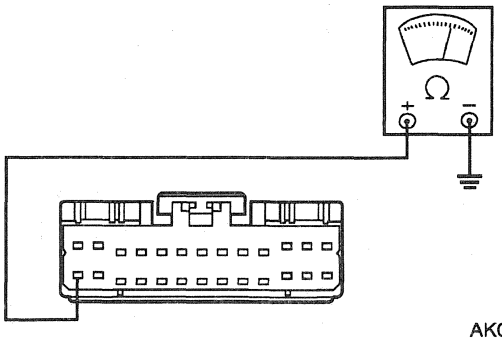 AK0313-B	2 Connect an ohmmeter between steering column/ignition/lighting (SCIL) module C288-14, Circuit 875 (BK/LB) and ground. • Is the resistance 5 ohms or less? → **Yes** GO to **B2**. → **No** REPAIR Circuit 875 (BK/LB). RESTORE the vehicle. REPEAT the SCIL module self-test.

Official Licensed Product
Ford Motor Company

(Continued)

DIAGNOSIS AND TESTING (Continued)

PINPOINT TEST B: NO COMMUNICATION WITH THE STEERING COLUMN/IGNITION/LIGHTING CONTROL MODULE (Continued)

TEST CONDITIONS	TEST DETAILS/RESULTS/ACTIONS
B2 CHECK CIRCUIT 57 (BK)	
1 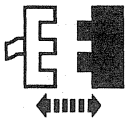 SCIL C287 2 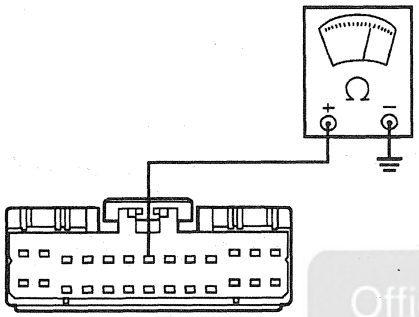 AK0314-B	2 Connect an ohmmeter between SCIL C287-7, Circuit 57 (BK) and ground. • Is the resistance 5 ohms or less? → **Yes** GO to **B3**. → **No** REPAIR Circuit 57 (BK). RESTORE the vehicle. REPEAT the SCIL module self-test.
B3 CHECK FOR B+ SUPPLY TO THE SCIL MODULE C287	
1 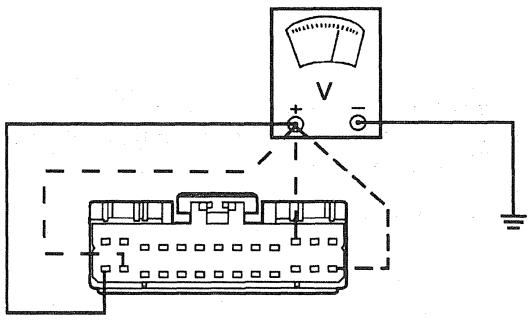 AK1260-A	1 Connect a voltmeter between each of the following SCIL module C287 pins and ground: • C287-14, Circuit 906 (R/O) • C287-26, Circuit 19 (LB/R) • C287-15, Circuit 1055 (W/LG) • C287-11, Circuit 1056 (DB/LG) • Is the voltage reading on any circuit B+? → **Yes** REFER to Section 418-00. → **No** For each suspect circuit, REFER to EVTM, Cell 58, Lighting Control Module and Cell 11, Fuse Panel/Circuit Protection. REPAIR as required. GO to **B4**.

Official Licensed Product Ford Motor Company

(Continued)

DIAGNOSIS AND TESTING (Continued)

PINPOINT TEST B: NO COMMUNICATION WITH THE STEERING COLUMN/IGNITION/LIGHTING CONTROL MODULE (Continued)

TEST CONDITIONS	TEST DETAILS/RESULTS/ACTIONS
B4 CHECK FOR B+ SUPPLY ON SCIL MODULE C289	
1 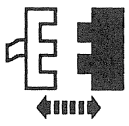 SCIL C289 2 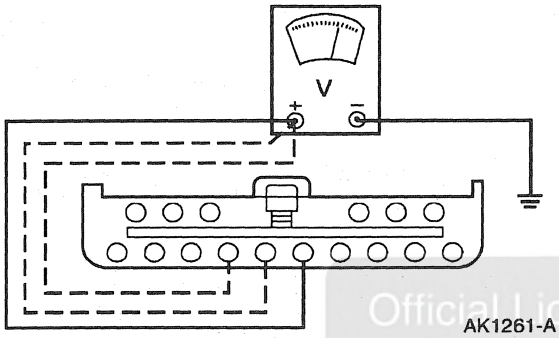 AK1261-A	2 Connect a voltmeter between each of the following SCIL module C289 pins and ground: • C289-5, Circuit 1058 (BR/W) • C289-6, Circuit 1057 (O/BK) • C289-7, Circuit 908 (PK/LG) • Is the voltage reading on any circuit B+? → **Yes** REFER to Section 418-00. → **No** For each suspect circuit, REFER to EVTM, Cell 58, Lighting Control Module and Cell 11, Fuse Panel/Circuit Protection. REPAIR as required. RESTORE the vehicle. REPEAT the SCIL module self-test.

Official Licensed Product
Ford Motor Company

PINPOINT TEST C: INCORRECT FUEL GAUGE INDICATION

TEST CONDITIONS	TEST DETAILS/RESULTS/ACTIONS
C1 CHECK FOR DTCS	
1 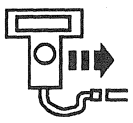 NGS 2 3 Retrieve HEC Continuous And Self-Test DTCs	• Is DTC U1131 retrieved? → **Yes** GO to HEC Diagnostic Trouble Code (DTC) Index. → **No** GO to **C2**.

(Continued)

DIAGNOSIS AND TESTING (Continued)

PINPOINT TEST C: INCORRECT FUEL GAUGE INDICATION (Continued)

TEST CONDITIONS	TEST DETAILS/RESULTS/ACTIONS
C2 CHECK THE FUEL GAUGE OPERATION	
1 HEC Active Command FUEL LEVEL CONTROL 2 Trigger FUELLEVEL ON	3 Adjust NGS Tester scroll knob until the command FUELLEVEL reads 50%. Note the fuel gauge reading. 4 Adjust NGS Tester scroll knob until the command FUELLEVEL reads 100%. • Did the fuel gauge needle start at empty, move to approximately half at 50% and full at 100%? → **Yes** The fuel gauge is operating properly. CHECK the fuel system for other possible concerns. CHECK the message center indicator module for proper operation. VERIFY the symptom. RETEST the system. → **No** REPAIR the hybrid electronic instrument cluster (HEC). RETEST the system.

Official Licensed Ford Motor Company

PINPOINT TEST D: GAUGE INACCURATE — ENGINE COOLANT TEMPERATURE

TEST CONDITIONS	TEST DETAILS/RESULTS/ACTIONS
D1 CHECK FOR DTCs	
1 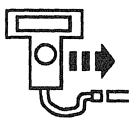 NGS 2 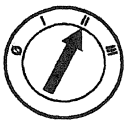 3 Retrieve HEC Continuous And Self-Test DTCs	• Is DTC U1073 retrieved? → **Yes** GO to HEC Diagnostic Trouble Code (DTC) Index. → **No** GO to **D2**.

(Continued)

DIAGNOSIS AND TESTING (Continued)

PINPOINT TEST D: GAUGE INACCURATE — ENGINE COOLANT TEMPERATURE (Continued)

TEST CONDITIONS	TEST DETAILS/RESULTS/ACTIONS
D2 CHECK THE ENGINE COOLANT TEMPERATURE GAUGE OPERATION	
1 HEC Active Command ENGINE COOLANT CONTROL 2 Trigger ENGCOOLNT ON	3 Adjust NGS Tester scroll knob until the command ENGCOOLNT reads 50%. Note the ECT gauge reading. 4 Adjust NGS Tester scroll knob until the command ENGCOOLNT reads 100%. • Did the temperature gauge needle start at cold, move to approximately half at 50% and full hot at 100%? → **Yes** The engine coolant temperature gauge is operating properly. CHECK engine cooling system for other possible concerns; REFER to Section 303-03. VERIFY the symptom. RETEST the system. → **No** REPAIR the hybrid electronic instrument cluster (HEC). RETEST the system.

Official Licensed Product
Ford Motor Company

DIAGNOSIS AND TESTING (Continued)

PINPOINT TEST E: INDICATOR INOPERATIVE/ALWAYS ON — LOW OIL PRESSURE WARNING

TEST CONDITIONS	TEST DETAILS/RESULTS/ACTIONS
E1 CHECK THE LOW OIL PRESSURE INDICATOR WITH ENGINE OFF	
1 2 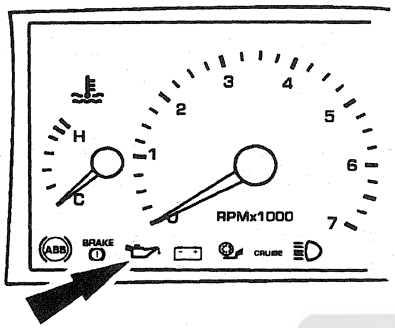 AK1064-B	2 Observe the low oil pressure warning indicator. • Is the oil pressure warning indicator on? → **Yes** GO to **E2**. → **No** GO to **E6**.
E2 CHECK THE LOW OIL PRESSURE INDICATOR WITH ENGINE RUNNING	
1 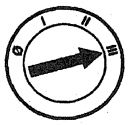 2 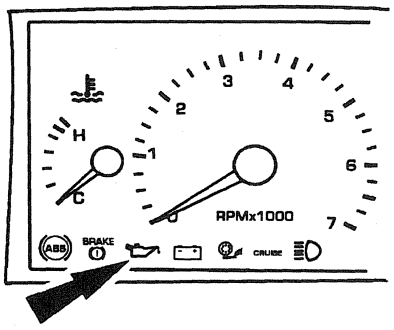 AK1064-B	2 Observe the low oil pressure warning indicator. • Is the low oil pressure warning indicator on? → **Yes** GO to **E3**. → **No** The oil pressure warning indicator is operating normally. REFER to Section 303-01.

Official Licensed Product
Ford Motor Company

(Continued)

DIAGNOSIS AND TESTING (Continued)

PINPOINT TEST E: INDICATOR INOPERATIVE/ALWAYS ON — LOW OIL PRESSURE WARNING (Continued)

TEST CONDITIONS	TEST DETAILS/RESULTS/ACTIONS
E3 CHECK THE ENGINE OIL PRESSURE	
	1 Check the engine oil pressure; refer to Section 303-01. • Is engine oil pressure OK? → **Yes** GO to **E4**. → **No** REFER to Section 303-01.
E4 CHECK THE ENGINE OIL PRESSURE SWITCH	
1 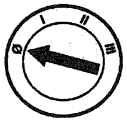 2 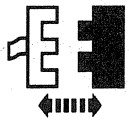 Engine Oil Pressure Switch C192	3 Connect an ohmmeter between the oil pressure switch terminal (component side) and ground with the engine OFF. Note the reading. Start the engine. Allow the engine to idle. Note the reading. • Is the resistance 5 ohms or less with the engine OFF and 500 ohms or greater with the engine running? → **Yes** GO to **E5**. → **No** REPLACE the engine oil pressure switch. RETEST the system.

(Continued)

Official Licensed Product
Ford Motor Company

DIAGNOSIS AND TESTING (Continued)

PINPOINT TEST E: INDICATOR INOPERATIVE/ALWAYS ON — LOW OIL PRESSURE WARNING (Continued)

TEST CONDITIONS	TEST DETAILS/RESULTS/ACTIONS
E5 CHECK CIRCUIT 31 (W/R) FOR A SHORT	
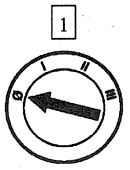 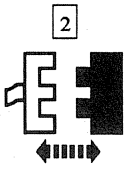 HEC C293 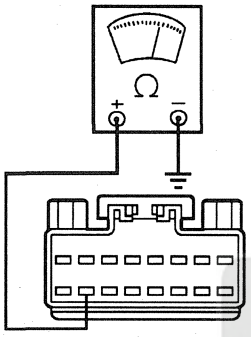 AK1026-A	3 Connect an ohmmeter between the hybrid electronic instrument cluster (HEC) C293-27, Circuit 31 (W/R) and ground. • Is the resistance 10 kohms or less? → **Yes** REPAIR Circuit 31 (W/R). RETEST the system. → **No** REPAIR the HEC. RETEST the system.
E6 CHECK FOR A DAMAGED SWITCH	
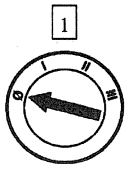 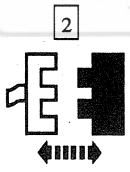 Engine Oil Pressure Switch C192	3 Connect an ohmmeter between the oil pressure switch terminal (component side) and ground with the engine OFF. Note the reading. Start the engine. Allow the engine to idle. Note the reading. • Is the resistance 5 ohms or less with the engine OFF and 500 ohms or greater with the engine running? → **Yes** GO to **E7**. → **No** REPLACE the engine oil pressure switch. RETEST the system.

Official Licensed Product Ford Motor Company

(Continued)

DIAGNOSIS AND TESTING (Continued)

PINPOINT TEST E: INDICATOR INOPERATIVE/ALWAYS ON — LOW OIL PRESSURE WARNING (Continued)

TEST CONDITIONS	TEST DETAILS/RESULTS/ACTIONS
E7 CHECK CIRCUIT 31 (W/R) FOR AN OPEN	
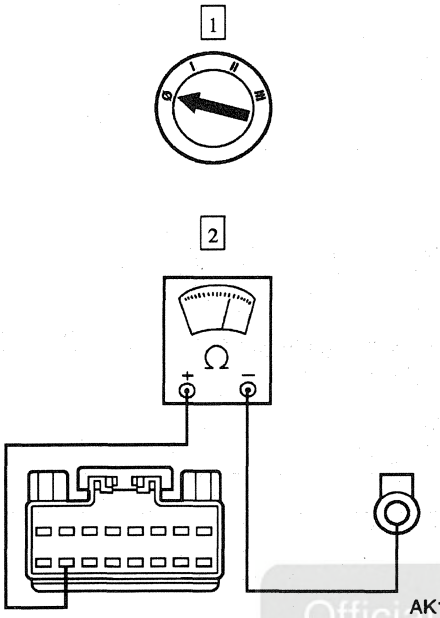 AK1027-A	2 Connect an ohmmeter between the HEC C293-27 and the oil pressure switch connector C192, Circuit 31 (W/R). • Is the resistance 5 ohms or less? → **Yes** GO to **E8**. → **No** REPAIR Circuit 31 (W/R). RETEST the system.
E8 CHECK THE SYSTEM FOR POWER	
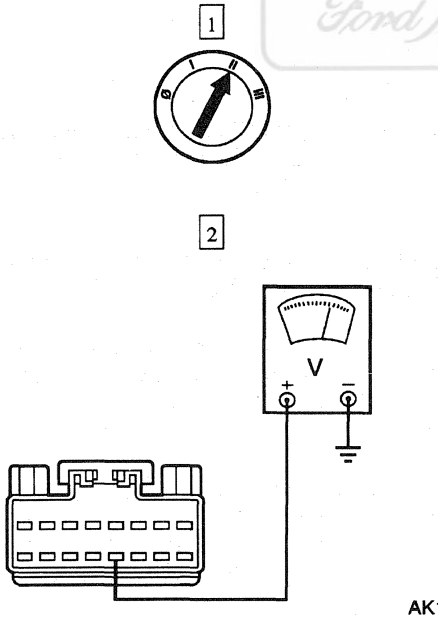 AK1028-A	2 Connect a voltmeter between HEC C293-24, Circuit 640 (R/Y), and ground. • Is the voltage reading B+? → **Yes** REPAIR the HEC. RETEST the system. → **No** REPAIR Circuit 640 (R/Y). RETEST the system.

Official Licensed Product
Ford Motor Company

DIAGNOSIS AND TESTING (Continued)

PINPOINT TEST F: GAUGE INACCURATE — SPEEDOMETER

TEST CONDITIONS	TEST DETAILS/RESULTS/ACTIONS
F1 CHECK FOR DTCs	
1 NGS 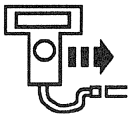 2 3 Retrieve HEC Continuous And Self-Test DTCs 	• Is DTC U1041 retrieved? → **Yes** GO to HEC Diagnostic Trouble Code (DTC) Index. → **No** GO to **F2**.
F2 CHECK THE SPEEDOMETER OPERATION	
1 HEC Active Command SPEEDOMETER CONTROL 2 Trigger SPDOMETER ON 	3 Adjust NGS Tester scroll knob until the command SPDOMETER reads 50%. Note speedometer reading. 4 Adjust NGS Tester scroll knob until command SPDOMETER reads 100%. • Did the speedometer gauge needle start at 0, move to approximately half at 50% and upper limit at 100%? → **Yes** The speedometer is operating properly. CHECK the anti-lock brake system for other possible concerns; REFER to Section 206-09. VERIFY the symptom. RETEST the system. → **No** REPAIR the hybrid electronic instrument cluster (HEC). RETEST the system.

Ford Motor Company Official Licensed Product

DIAGNOSIS AND TESTING (Continued)

PINPOINT TEST G: THE SPEED CONTROL INDICATOR IS NEVER/ALWAYS ON

TEST CONDITIONS	TEST DETAILS/RESULTS/ACTIONS
G1 CHECK CRUISE INDICATOR	
1 2 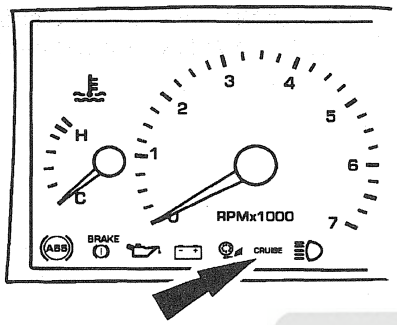 AK1062-B	2 Check CRUISE indicator. • Is the indicator always on? → **Yes** GO to **G2**. → **No** GO to **G4**.
G2 CHECK THE SPEED CONTROL SYSTEM OPERATION	
	1 Test drive the vehicle and operate the speed control system. • Does the speed control set and operate properly? → **Yes** GO to **G3**. → **No** REFER to Section 310-03.

Official Licensed Product Ford Motor Company

(Continued)

DIAGNOSIS AND TESTING (Continued)

PINPOINT TEST G: THE SPEED CONTROL INDICATOR IS NEVER/ALWAYS ON (Continued)

TEST CONDITIONS	TEST DETAILS/RESULTS/ACTIONS
G3 CHECK THE SPEED CONTROL MODULE	
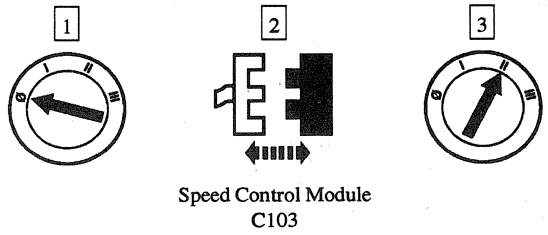 Speed Control Module C103	
4 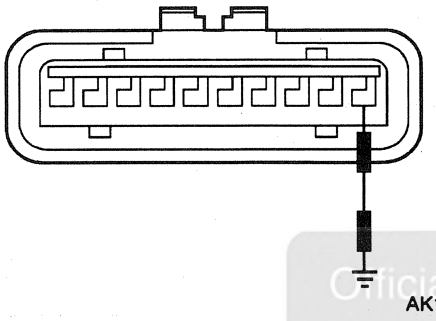 AK1029-B	4 Connect a jumper wire between the speed control module C103-1, Circuit 563 (O/Y) and ground.
5 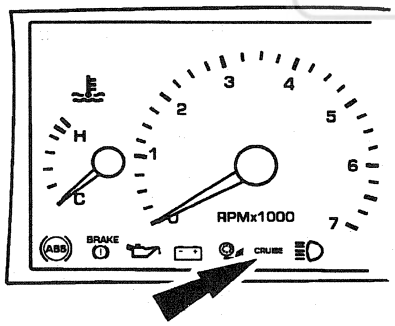 AK1062-B	5 Check CRUISE indicator. • Does the CRUISE indicator illuminate? → **Yes** REPLACE the speed control module. REFER to Section 310-03. RETEST the system. → **No** REMOVE jumper wire and GO to **G5**.

Official Licensed Product
Ford Motor Company

(Continued)

DIAGNOSIS AND TESTING (Continued)

PINPOINT TEST G: THE SPEED CONTROL INDICATOR IS NEVER/ALWAYS ON (Continued)

TEST CONDITIONS	TEST DETAILS/RESULTS/ACTIONS
G4 CHECK CIRCUIT 563 (O/Y)	
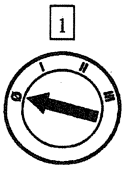 1 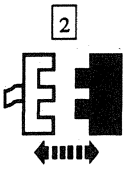 2 HEC C293 and Speed Control Module C103 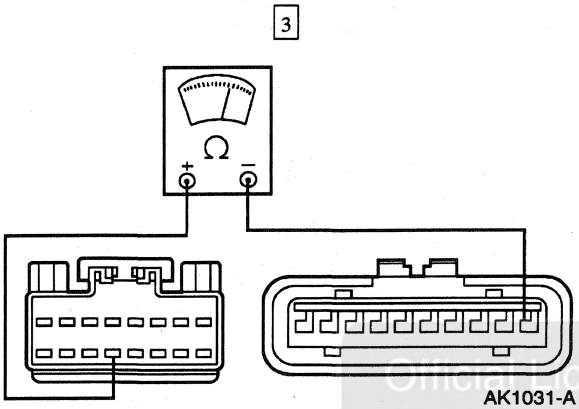 3 AK1031-A	3 Connect an ohmmeter between the hybrid electronic instrument cluster (HEC) C293-25 and speed control module C103-1, Circuit 563 (O/Y). • Is the resistance 5 ohms or less? → **Yes** REPAIR the HEC. RETEST the system. → **No** REPAIR Circuit 563 (O/Y). RETEST the system.
G5 CHECK FOR SHORTED MODULE	
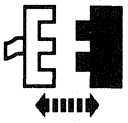 1 Speed Control Module C103	• Is the CRUISE indicator still on? → **Yes** GO to **G6**. → **No** REPLACE the speed control module; REFER to Section 310-03. RETEST the system.

Official Licensed Product Ford Motor Company

(Continued)

DIAGNOSIS AND TESTING (Continued)

PINPOINT TEST G: THE SPEED CONTROL INDICATOR IS NEVER/ALWAYS ON (Continued)

TEST CONDITIONS	TEST DETAILS/RESULTS/ACTIONS
G6 CHECK CIRCUIT 563 (O/Y) FOR A SHORT	
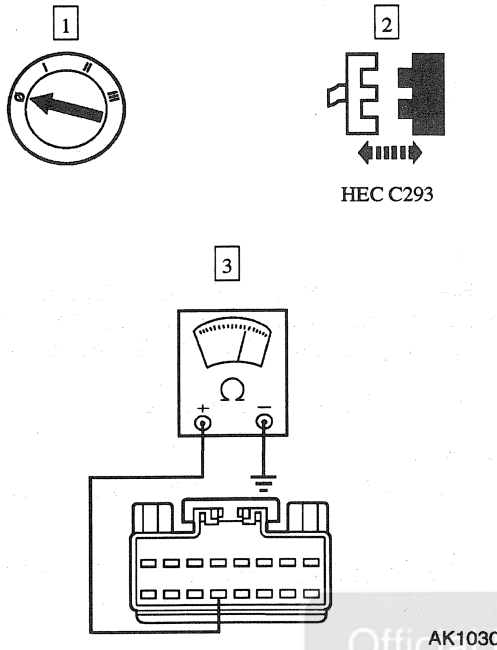	3 Connect an ohmmeter between the HEC C293-25, Circuit 563 (O/Y) and ground. • Is the resistance 10 kohms or less? → **Yes** REPAIR Circuit 563 (O/Y). RETEST the system. → **No** REPAIR the HEC. RETEST the system.

Official Licensed Product Ford Motor Company

PINPOINT TEST H: INCORRECT TACHOMETER INDICATION

TEST CONDITIONS	TEST DETAILS/RESULTS/ACTIONS
H1 CHECK FOR DTCs	
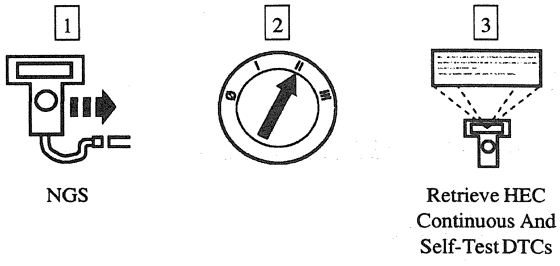	• Is DTC U1027 retrieved? → **Yes** GO to HEC Diagnostic Trouble Code (DTC) Index. → **No** GO to **H2**.

(Continued)

DIAGNOSIS AND TESTING (Continued)

PINPOINT TEST H: INCORRECT TACHOMETER INDICATION (Continued)

TEST CONDITIONS	TEST DETAILS/RESULTS/ACTIONS
H2 CHECK THE TACHOMETER OPERATION	
1 HEC Active Command TACHOMETER CONTROL 2 Trigger TCHOMETER ON	3 Adjust NGS Tester scroll knob until the command TCHOMETER reads 50%. Note the tachometer reading. 4 Adjust NGS Tester scroll knob until command TCHOMETER reads 100%. • Did the tachometer gauge needle start at 0, move to approximately half at 50% and upper limit at 100%? → **Yes** The tachometer is operating properly. CHECK the engine system for other possible concerns; REFER to Section 303-01. VERIFY the symptom. RETEST the system. → **No** REPAIR the hybrid electronic instrument cluster (HEC). RETEST the system.

Official Licensed Product
Ford Motor Company

DIAGNOSIS AND TESTING (Continued)

PINPOINT TEST J: THE BRAKE WARNING INDICATOR IS NEVER/ALWAYS ON

TEST CONDITIONS	TEST DETAILS/RESULTS/ACTIONS
J1 CHECK FOR BRAKE WARNING	
1 2 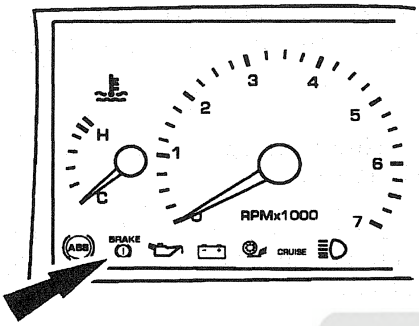 AK1060-B	2 **NOTE:** Make sure the brake fluid is at the specified level and the parking brake is released. Check the brake warning indicator. • Does the BRAKE warning indicator prove out for three seconds and stay on? → **Yes** GO to **J2**. → **No** GO to **J6**.
J2 CHECK FOR DTCs	
1 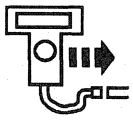 NGS 2 Retrieve HEC Continuous And Self-Test DTCs	• Is DTC U1051 retrieved? → **Yes** GO to HEC Diagnostic Trouble Code (DTC) Index. → **No** GO to **J3**.

(Continued)

Official Licensed Product Ford Motor Company

DIAGNOSIS AND TESTING (Continued)

PINPOINT TEST J: THE BRAKE WARNING INDICATOR IS NEVER/ALWAYS ON (Continued)

TEST CONDITIONS	TEST DETAILS/RESULTS/ACTIONS
J3 CHECK PID PRK__BRK	
NOTE: Make sure the parking brake is released before performing this step.	
1 SCIL Module PID PRK__BRK	• Does the PID PRK__BRK read ON? → **Yes** REFER to Section 206-05. → **No** GO to **J4**.
J4 CHECK THE BRAKE FLUID LEVEL SWITCH	
1 2 3 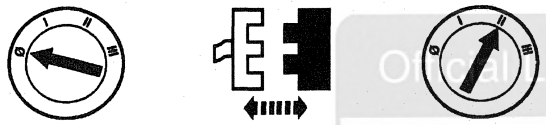 Brake Fluid Level Switch C139 4 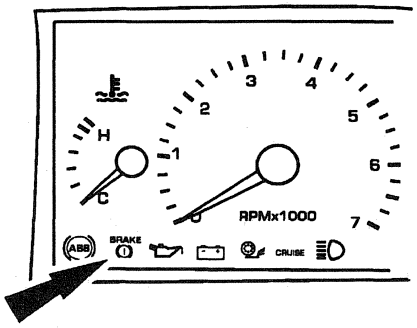 AK1060-B	4 Observe brake warning indicator. • Is the BRAKE warning indicator on? → **Yes** GO to **J5**. → **No** REPLACE the brake fluid level switch. RETEST the system.

Official Licensed Product
Ford Motor Company

(Continued)

DIAGNOSIS AND TESTING (Continued)

PINPOINT TEST J: THE BRAKE WARNING INDICATOR IS NEVER/ALWAYS ON (Continued)

TEST CONDITIONS	TEST DETAILS/RESULTS/ACTIONS
J5 CHECK CIRCUIT 307 (BK/Y) FOR A SHORT	
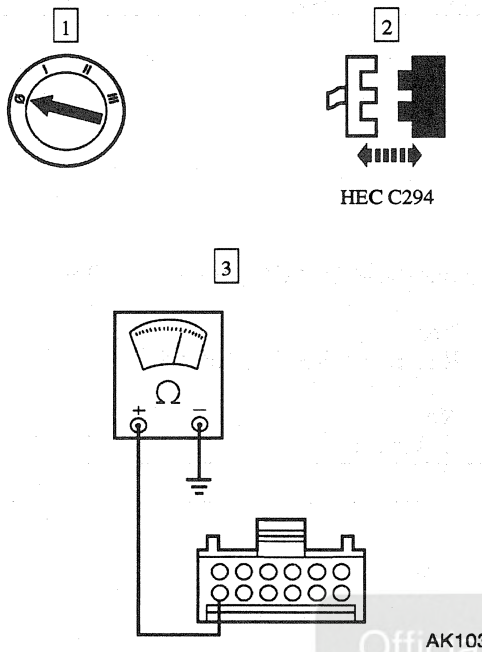	3 Connect an ohmmeter between the hybrid electronic instrument cluster (HEC) C294-12, Circuit 307 (BK/Y) and ground. • Is the resistance 10 kohms or less? → **Yes** REPAIR Circuit 307 (BK/Y). RETEST the system. → **No** REPAIR the HEC. RETEST the system.
J6 CHECK THE HYBRID ELECTRONIC INSTRUMENT CLUSTER (HEC)	
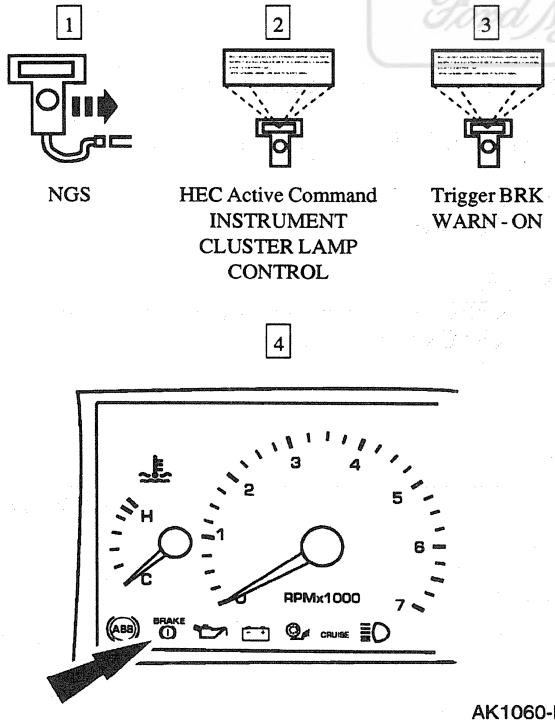	4 Observe the brake warning indicator. • Does the BRAKE warning indicator turn on? → **Yes** GO to **J7**. → **No** REPAIR the HEC. RETEST the system.

Official Licensed Product Ford Motor Company

(Continued)

DIAGNOSIS AND TESTING (Continued)

PINPOINT TEST J: THE BRAKE WARNING INDICATOR IS NEVER/ALWAYS ON (Continued)

TEST CONDITIONS	TEST DETAILS/RESULTS/ACTIONS
J7 CHECK THE BRAKE FLUID LEVEL SWITCH INPUT	
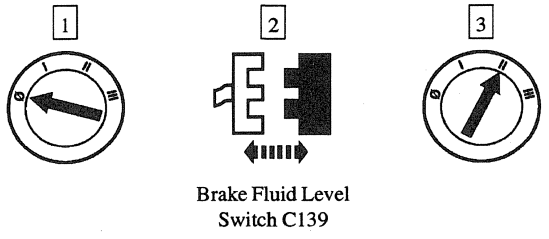 Brake Fluid Level Switch C139 4 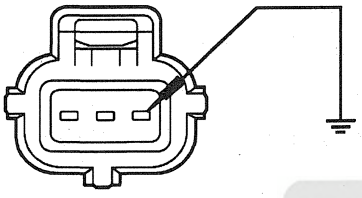 GK7028-A 5 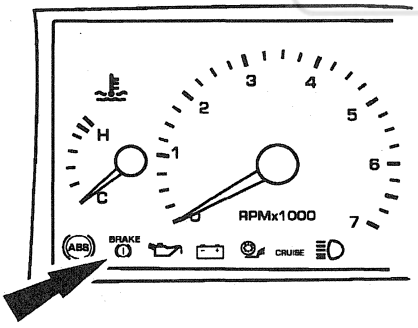 AK1060-B	4 Connect a jumper wire between the brake fluid level switch C139, Circuit 307 (BK/Y) and ground. 5 Observe brake warning indicator. • Does the BRAKE warning indicator turn on? → **Yes** The HEC is operating properly at this time. RETEST the system. → **No** GO to **J8**.

Official Licensed Product
Ford Motor Company

(Continued)

DIAGNOSIS AND TESTING (Continued)

PINPOINT TEST J: THE BRAKE WARNING INDICATOR IS NEVER/ALWAYS ON (Continued)

TEST CONDITIONS	TEST DETAILS/RESULTS/ACTIONS
J8 CHECK CIRCUIT 307 (BK/Y) FOR AN OPEN	
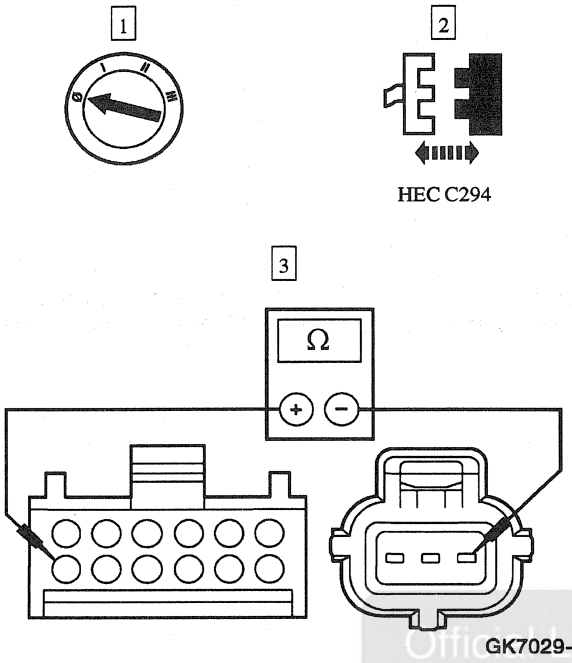 GK7029-A	3 Connect an ohmmeter between the HEC C294-12 and the brake fluid level switch C139, Circuit 307 (BK/Y). • Is the resistance 5 ohms or less? → **Yes** REPAIR the HEC. RETEST the system. → **No** REPAIR Circuit 307 (BK/Y). RETEST the system.

Official Licensed Product
Ford Motor Co.

PINPOINT TEST K: THE CHARGE SYSTEM WARNING INDICATOR IS NEVER/ALWAYS ON

TEST CONDITIONS	TEST DETAILS/RESULTS/ACTIONS
K1 CHECK THE CHARGING SYSTEM WARNING INDICATOR WITH THE ENGINE OFF	
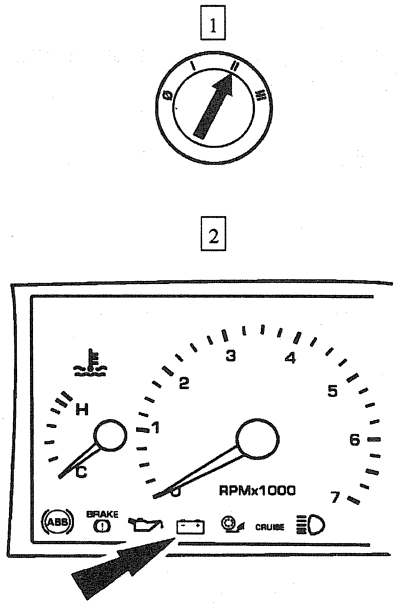 AK1059-B	2 Observe the charging system warning indicator. • Is the charging system warning indicator on? → **Yes** GO to **K2**. → **No** GO to **K6**.

(Continued)

DIAGNOSIS AND TESTING (Continued)

PINPOINT TEST K: THE CHARGE SYSTEM WARNING INDICATOR IS NEVER/ALWAYS ON (Continued)

TEST CONDITIONS	TEST DETAILS/RESULTS/ACTIONS
K2 CHECK THE CHARGING SYSTEM WARNING INDICATOR WITH THE ENGINE RUNNING	
1 2 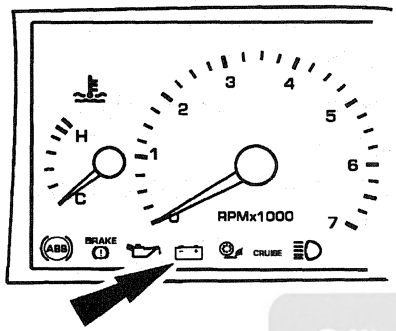 AK1059-B	2 Observe the charging system warning indicator. • Is the charging system warning indicator on? → **Yes** GO to **K3**. → **No** The charging system warning indicator is operating normally; REFER to Section 414-00.
K3 CHECK THE CHARGING SYSTEM VOLTAGE OUTPUT	
1 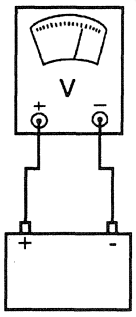 AH0206-A	1 Connect a voltmeter between the positive and negative posts of the battery. 2 Accelerate the engine speed to about 2000 RPM. Note the voltage reading. • Is the voltage reading greater than 14 volts? → **Yes** GO to **K4**. → **No** REFER to Section 414-00.

(Continued)

Official Licensed Product Ford Motor Company

DIAGNOSIS AND TESTING (Continued)

PINPOINT TEST K: THE CHARGE SYSTEM WARNING INDICATOR IS NEVER/ALWAYS ON (Continued)

TEST CONDITIONS	TEST DETAILS/RESULTS/ACTIONS
K4 CHECK CIRCUIT 904 (LG/R) FOR A SHORT	
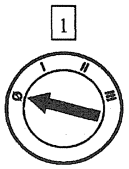 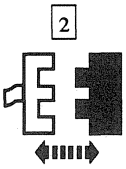 HEC C293 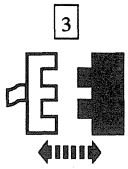 Generator C154 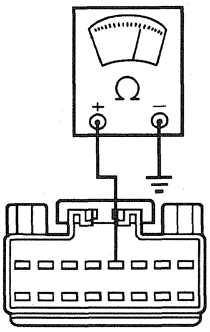 AK1035-A	4 Connect an ohmmeter between the hybrid electronic instrument cluster (HEC) C293-16, Circuit 904 (LG/R) and ground. • Is the resistance 10 kohms or less? → **Yes** REPAIR Circuit 904 (LG/R). RETEST the system. → **No** GO to **K5**.

(Continued)

Official Licensed Product
Ford Motor Company

DIAGNOSIS AND TESTING (Continued)

PINPOINT TEST K: THE CHARGE SYSTEM WARNING INDICATOR IS NEVER/ALWAYS ON (Continued)

TEST CONDITIONS	TEST DETAILS/RESULTS/ACTIONS
K5 CHECK GENERATOR	
1 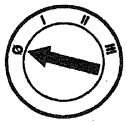 2 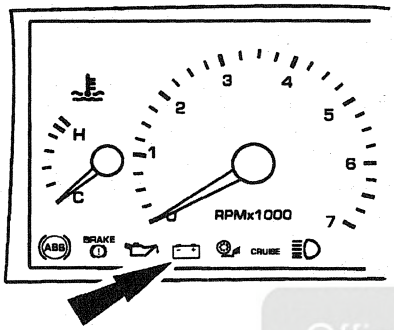 AK1059-B	• Is the charging system warning indicator on? → **Yes** REPAIR the HEC. RETEST the system. → **No** REPLACE the generator; REFER to Section 414-02. RETEST the system.

Official Licensed Product
Ford Motor Company

(Continued)

DIAGNOSIS AND TESTING (Continued)

PINPOINT TEST K: THE CHARGE SYSTEM WARNING INDICATOR IS NEVER/ALWAYS ON (Continued)

TEST CONDITIONS	TEST DETAILS/RESULTS/ACTIONS
K6 CHECK CIRCUIT 294 (W/LB) FOR SUPPLY VOLTAGE	
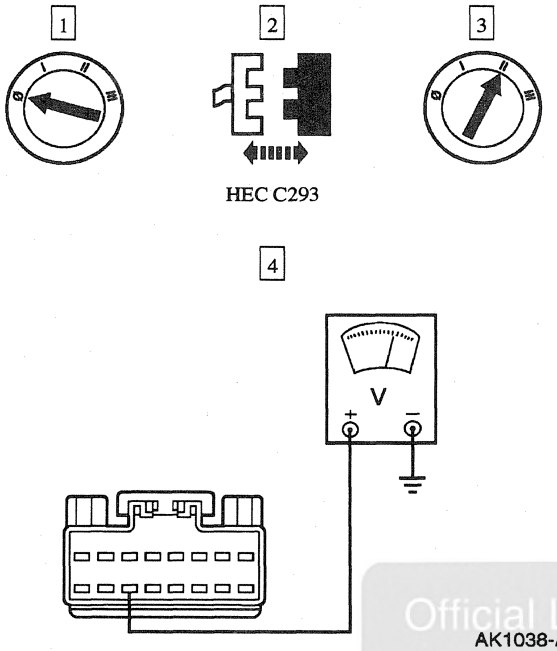	4 Connect a voltmeter between the hybrid electronic instrument cluster (HEC) C293-26, Circuit 294 (W/LB), and ground. • Is the voltage reading B+? → **Yes** GO to **K7**. → **No** GO to **K8**.
K7 CHECK CIRCUIT 904 (LG/R) FOR AN OPEN	
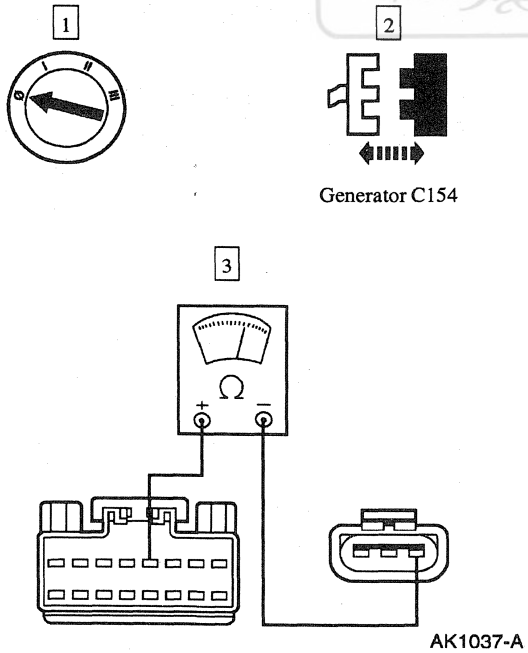	3 Connect an ohmmeter between HEC C293-16 and the generator C154, Circuit 904 (LG/R). • Is the resistance 5 ohms or less? → **Yes** GO to **K10**. → **No** REPAIR Circuit 904 (LG/R). RETEST the system.

Official Licensed Product
Ford Motor Company

(Continued)

DIAGNOSIS AND TESTING (Continued)

PINPOINT TEST K: THE CHARGE SYSTEM WARNING INDICATOR IS NEVER/ALWAYS ON (Continued)

TEST CONDITIONS	TEST DETAILS/RESULTS/ACTIONS
K8 CHECK FUSE JUNCTION PANEL FUSE 17 (10A)	
1 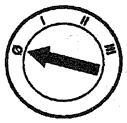 2 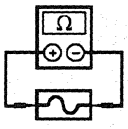 Fuse Junction Panel Fuse 17 (10A)	• Is the fuse OK? → **Yes** REPAIR Circuit 294 (W/LB). RETEST the system. → **No** GO to **K9**.
K9 CHECK CIRCUIT 294 (W/LB) FOR A SHORT	
1 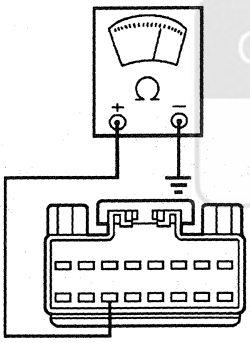 AK1039-A	1 Connect an ohmmeter between HEC C293-26, Circuit 294 (W/LB) and ground. • Is the resistance 10 kohms or less? → **Yes** REPAIR Circuit 294 (W/LB). REPLACE Fuse 17 (10A). RETEST the system. → **No** REPAIR the HEC. RETEST the system.
K10 ISOLATE CONCERN	
1 HEC C293 3	2 Connect a jumper wire between ground and the generator C154, Circuit 904 (LG/R).

(Continued)

DIAGNOSIS AND TESTING (Continued)

PINPOINT TEST K: THE CHARGE SYSTEM WARNING INDICATOR IS NEVER/ALWAYS ON (Continued)

TEST CONDITIONS	TEST DETAILS/RESULTS/ACTIONS
K10 ISOLATE CONCERN (Continued)	
	• Is the charging system warning indicator on? → **Yes** REPLACE the generator; REFER to Section 414-02. RETEST the system. → **No** REPAIR the HEC. RETEST the system.

PINPOINT TEST L: THE TRANSMISSION RANGE INDICATOR IS NEVER/ALWAYS ON

TEST CONDITIONS	TEST DETAILS/RESULTS/ACTIONS
L1 CHECK THE INSTRUMENT CLUSTER TRANSMISSION RANGE INDICATOR	
	1 Press and hold the brake pedal. 3 Place the gear range selector lever in each position while observing the instrument cluster transmission range indicator. • Does the instrument cluster transmission range indicator illuminate each gear range selector lever position? → **Yes** GO to **L3**. → **No** GO to **L2**.

Official Licensed Product
Ford Motor Co.

(Continued)

DIAGNOSIS AND TESTING (Continued)

PINPOINT TEST L: THE TRANSMISSION RANGE INDICATOR IS NEVER/ALWAYS ON (Continued)

TEST CONDITIONS	TEST DETAILS/RESULTS/ACTIONS
L2 CHECK FOR DTCS	
1 NGS 2 Retrieve HEC Continuous And Self-Test DTCs	• Is DTC U1059 retrieved? → **Yes** GO to HEC Diagnostic Trouble Code (DTC) Index. → **No** REPAIR the hybrid electronic instrument cluster (HEC). RETEST the system.
L3 CHECK THE CONSOLE TRANSMISSION RANGE INDICATOR	
2	1 Press and hold the brake pedal. 3 Place the gear range selector lever in each position while observing the console transmission range indicator. • Are any console transmission range indicator positions illuminated? → **Yes** GO to **L5**. → **No** GO to **L4**.

Official Licensed Product
Ford Motor Company

(Continued)

DIAGNOSIS AND TESTING (Continued)

PINPOINT TEST L: THE TRANSMISSION RANGE INDICATOR IS NEVER/ALWAYS ON (Continued)

TEST CONDITIONS	TEST DETAILS/RESULTS/ACTIONS
L4 CHECK THE CONSOLE TRANSMISSION RANGE INDICATOR POWER SUPPLY	
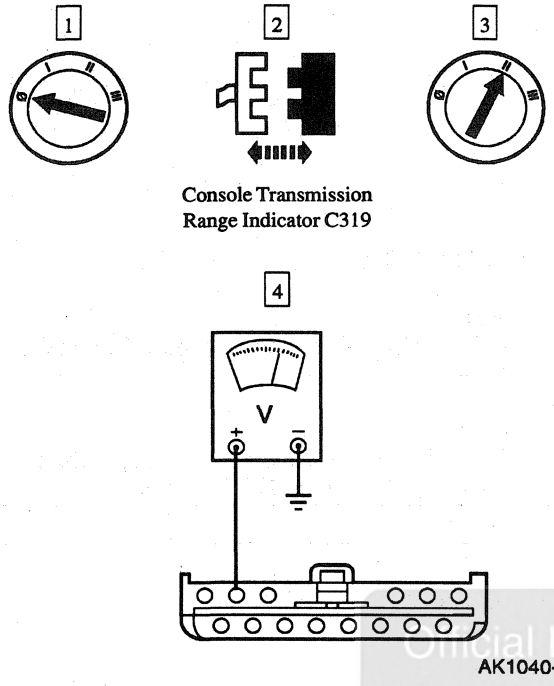	4 Connect a voltmeter between the console transmission range indicator C319-13, Circuit 298 (P/O), and ground. • Is the voltage reading B+? → **Yes** REPLACE the console transmission range indicator. RETEST the system. → **No** REPAIR Circuit 298 (P/O). RETEST the system.
L5 CHECK FOR CONSOLE PARK INDICATION	
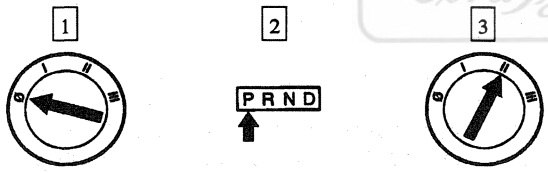	• Is the console transmission range P indicator on? → **Yes** GO to **L14**. → **No** GO to **L6**.

(Continued)

Official Licensed Product Ford Motor Company

DIAGNOSIS AND TESTING (Continued)

PINPOINT TEST L: THE TRANSMISSION RANGE INDICATOR IS NEVER/ALWAYS ON (Continued)

TEST CONDITIONS	TEST DETAILS/RESULTS/ACTIONS
L6 COMMAND THE P INDICATOR ON	
 NGS HEC Active Command INSTRUMENT PANEL LAMP CONTROL Select PRNDL LMP	4 Scroll NGS Tester to select PARK and Trigger ON. • Does console P indicator illuminate? → **Yes** GO to **L7**. → **No** GO to **L12**.
L7 CHECK THE PARK SWITCH INPUT	
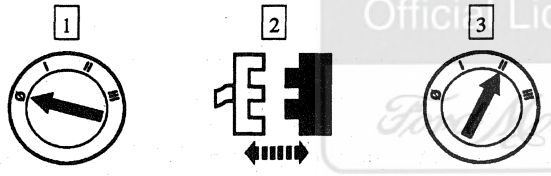 HEC C294 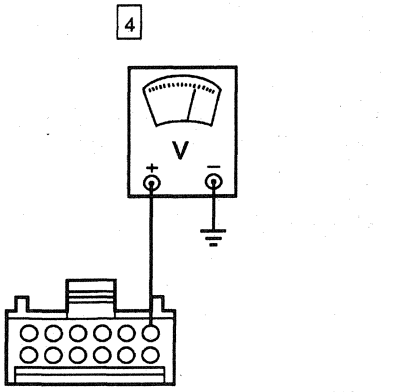 AK1041-A	4 Connect a voltmeter between HEC C294-1, Circuit 763 (O/W), and ground. • Is the voltage reading B+? → **Yes** GO to **L10**. → **No** GO to **L8**.

Official Licensed Product Ford Motor Company

(Continued)

DIAGNOSIS AND TESTING (Continued)

PINPOINT TEST L: THE TRANSMISSION RANGE INDICATOR IS NEVER/ALWAYS ON (Continued)

TEST CONDITIONS	TEST DETAILS/RESULTS/ACTIONS
L8 CHECK CIRCUIT 763 (O/W) FOR A SHORT	
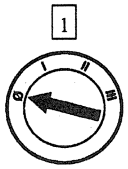 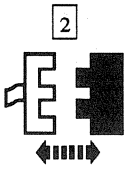 Console Transmission Range Indicator C319 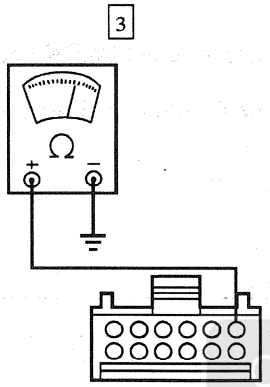 AK1042-A	3 Connect an ohmmeter between HEC C294-1, Circuit 763 (O/W) and ground. • Is the resistance 10 kohms or less? → **Yes** REPAIR Circuit 763 (O/W). RETEST the system. → **No** GO to **L9**.
L9 CHECK CIRCUIT 763 (O/W) FOR AN OPEN	
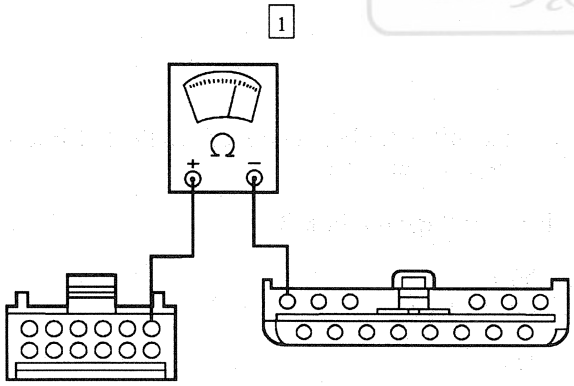 AK1043-A	1 Connect an ohmmeter between HEC C294-1 and the console transmission range indicator C319-14, Circuit 763 (O/W). • Is the resistance 5 ohms or less? → **Yes** REPLACE the console transmission range indicator. RETEST the system. → **No** REPAIR Circuit 763 (O/W). RETEST the system.

Official Licensed Product Ford Motor Company

(Continued)

DIAGNOSIS AND TESTING (Continued)

PINPOINT TEST L: THE TRANSMISSION RANGE INDICATOR IS NEVER/ALWAYS ON (Continued)

TEST CONDITIONS	TEST DETAILS/RESULTS/ACTIONS
L10 CHECK CIRCUIT 763 (O/W) FOR A SHORT TO B+	
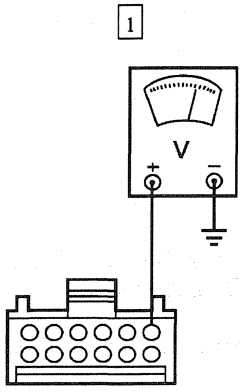 AK1041-A	1 Connect a voltmeter between HEC C294-1, Circuit 763 (O/W), and ground. • Is the voltage reading B+? → **Yes** GO to **L11**. → **No** REPAIR the HEC. RETEST the system.
L11 CHECK THE CONSOLE TRANSMISSION RANGE INDICATOR FOR A SHORT TO B+	
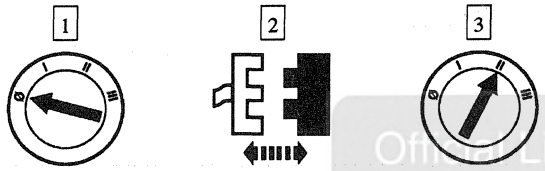 Console Transmission Range Indicator C319 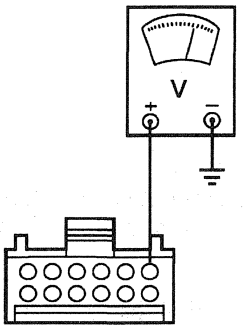 AK1041-A	4 Connect a voltmeter between HEC C294-1, Circuit 763 (O/W), and ground. • Is the voltage reading B+? → **Yes** REPAIR Circuit 763 (O/W). RETEST the system. → **No** REPLACE the console transmission range indicator. RETEST the system.

Official Licensed Product Ford Motor Company

(Continued)

DIAGNOSIS AND TESTING (Continued)

PINPOINT TEST L: THE TRANSMISSION RANGE INDICATOR IS NEVER/ALWAYS ON (Continued)

TEST CONDITIONS	TEST DETAILS/RESULTS/ACTIONS
L12 CHECK THE HEC PARK OUTPUT	
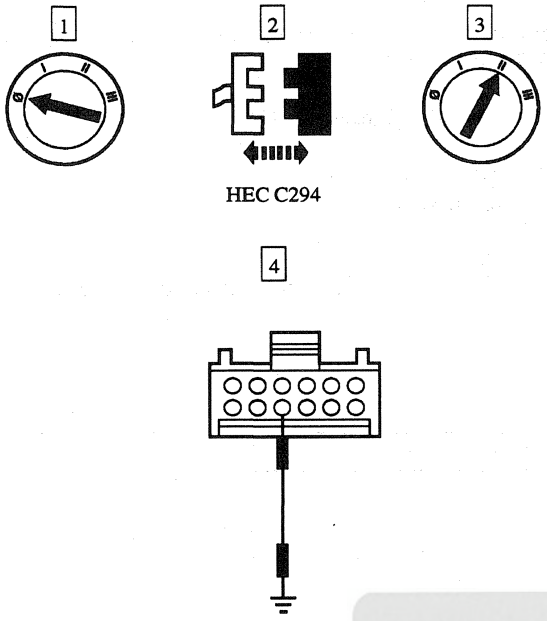	4 Connect a jumper wire between HEC C294-10, Circuit 466 (PK/O) and ground. • Does the console P indicator illuminate? → **Yes** REPAIR the HEC. RETEST the system. → **No** GO to **L13**.
L13 CHECK CIRCUIT 466 (PK/O) FOR AN OPEN	
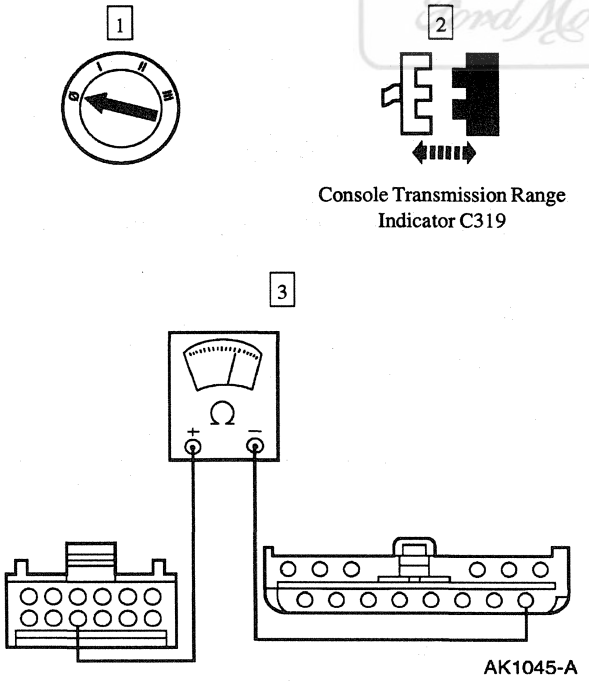	3 Connect an ohmmeter between HEC C294-10 and the console transmission range indicator C319-1, Circuit 466 (PK/O). • Is the resistance 5 ohms or less? → **Yes** REPLACE the console transmission range indicator. RETEST the system. → **No** REPAIR Circuit 466 (PK/O). RETEST the system.

Official Licensed Product Ford Motor Company

(Continued)

DIAGNOSIS AND TESTING (Continued)

PINPOINT TEST L: THE TRANSMISSION RANGE INDICATOR IS NEVER/ALWAYS ON (Continued)

TEST CONDITIONS	TEST DETAILS/RESULTS/ACTIONS
L14 CHECK THE CONSOLE TRANSMISSION RANGE INDICATOR REVERSE INDICATION	
1 2 	• Is the console transmission range indicator R indicator on? → **Yes** GO to **L17**. → **No** GO to **L15**.
L15 COMMAND R INDICATOR ON	
1 2 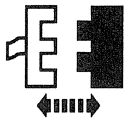 Console Transmission Range Indicator C319 3 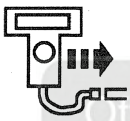 NGS 4 5 HEC Active Command INSTRUMENT PANEL LAMP CONTROL 6 Select PRNDL LMP	7 Scroll NGS Tester to select REV and Trigger ON.

Official Licensed Product
Ford Motor Company

(Continued)

DIAGNOSIS AND TESTING (Continued)

PINPOINT TEST L: THE TRANSMISSION RANGE INDICATOR IS NEVER/ALWAYS ON (Continued)

TEST CONDITIONS	TEST DETAILS/RESULTS/ACTIONS
L15 COMMAND R INDICATOR ON (Continued)	
8 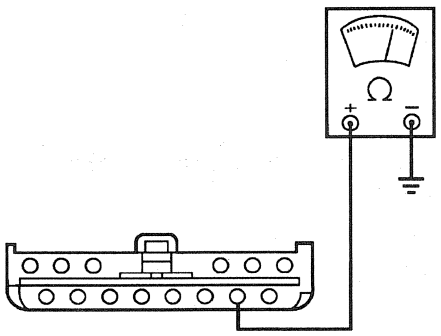 AK1046-A	8 Connect an ohmmeter between the console transmission range indicator C319-2, Circuit 817 (Y/LB) and ground. • Is the resistance 5 ohms or less? → **Yes** REPLACE the console transmission range indicator. RETEST the system. → **No** GO to **L16**.
L16 CHECK CIRCUIT 817 (Y/LB) FOR AN OPEN	
1 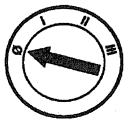 2 HEC C294 3 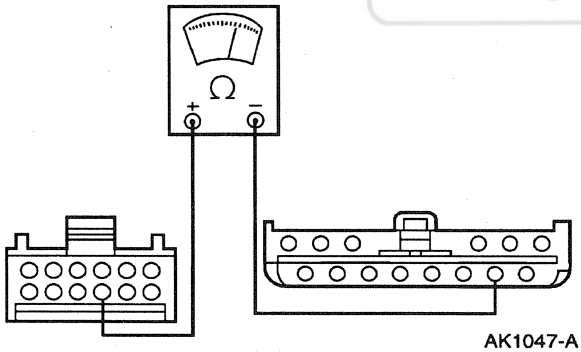 AK1047-A	3 Connect an ohmmeter between HEC C294-9 and the console transmission range indicator C319-2, Circuit 817 (Y/LB). • Is the resistance 5 ohms or less? → **Yes** REPAIR the HEC. RETEST the system. → **No** REPAIR Circuit 817 (Y/LB). RETEST the system.
L17 CHECK CONSOLE TRANSMISSION RANGE INDICATOR NEUTRAL INDICATION	
2 	1 Press and hold the brake pedal.

Official Licensed Product
Ford Motor Co.

(Continued)

DIAGNOSIS AND TESTING (Continued)

PINPOINT TEST L: THE TRANSMISSION RANGE INDICATOR IS NEVER/ALWAYS ON (Continued)

TEST CONDITIONS	TEST DETAILS/RESULTS/ACTIONS
L17 CHECK CONSOLE TRANSMISSION RANGE INDICATOR NEUTRAL INDICATION (Continued)	
	• Is the console transmission range indicator N indicator on? → **Yes** GO to **L20**. → **No** GO to **L18**.
L18 COMMAND THE N INDICATOR ON	
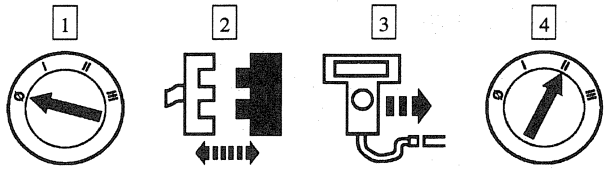 Console Transmission Range Indicator C319 NGS HEC Active Command INSTRUMENT PANEL LAMP CONTROL Select PRNDL LMP 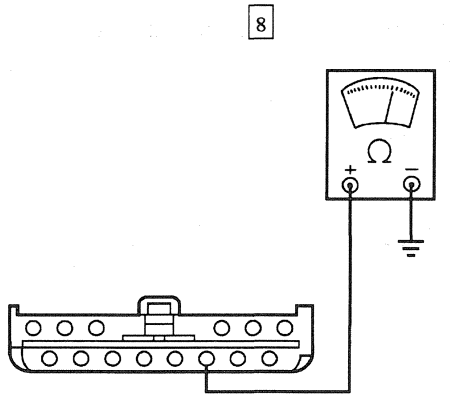 AK1048-A	7 Scroll NGS Tester to select NEUT and Trigger ON. 8 Connect an ohmmeter between the console transmission range indicator C319-3, Circuit 814 (W/BK) and ground. • Is the resistance 5 ohms or less? → **Yes** REPLACE the console transmission range indicator. RETEST the system. → **No** GO to **L19**.

Official Licensed Product Ford Motor Company

(Continued)

DIAGNOSIS AND TESTING (Continued)

PINPOINT TEST L: THE TRANSMISSION RANGE INDICATOR IS NEVER/ALWAYS ON (Continued)

TEST CONDITIONS	TEST DETAILS/RESULTS/ACTIONS
L19 CHECK CIRCUIT 814 (W/BK) FOR AN OPEN	
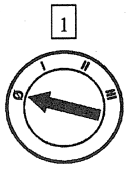 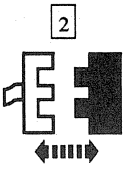 HEC C294 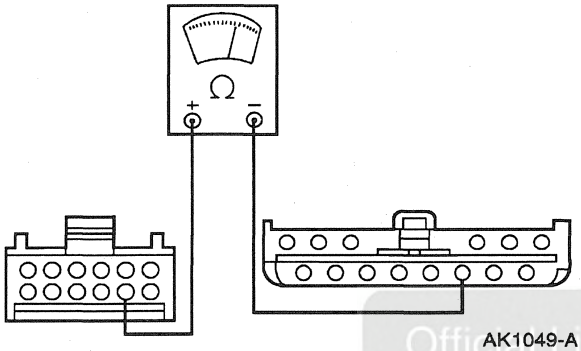 AK1049-A	3 Connect an ohmmeter between HEC C294-8 and the console transmission range indicator C319-3, Circuit 814 (W/BK). • Is the resistance 5 ohms or less? → **Yes** REPAIR the HEC. RETEST the system. → **No** REPAIR Circuit 814 (W/BK). RETEST the system.
L20 CHECK THE CONSOLE TRANSMISSION RANGE INDICATOR DRIVE INDICATION	
2 	1 Press and hold the brake pedal. • Is the console transmission range indicator D indicator on? → **Yes** GO to **L23**. → **No** GO to **L21**.

Official Licensed Product Ford Motor Company

(Continued)

DIAGNOSIS AND TESTING (Continued)

PINPOINT TEST L: THE TRANSMISSION RANGE INDICATOR IS NEVER/ALWAYS ON (Continued)

TEST CONDITIONS	TEST DETAILS/RESULTS/ACTIONS
L21 COMMAND THE D INDICATOR ON	
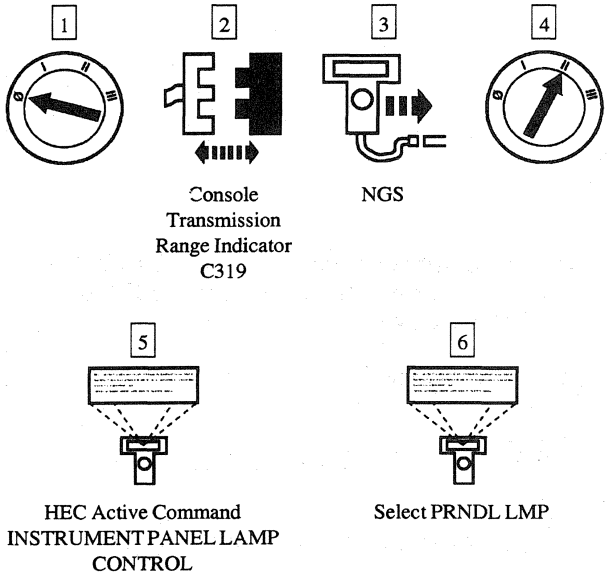	7 Scroll NGS Tester to select DRV and Trigger ON. 8 Connect an ohmmeter between the console transmission range indicator C319-4, Circuit 818 (GY/W) and ground. • Is the resistance 5 ohms or less? → **Yes** REPLACE the console transmission range indicator. RETEST the system. → **No** GO to **L22**.

Official Licensed Product
Ford Motor Co.

(Continued)

DIAGNOSIS AND TESTING (Continued)

PINPOINT TEST L: THE TRANSMISSION RANGE INDICATOR IS NEVER/ALWAYS ON (Continued)

TEST CONDITIONS	TEST DETAILS/RESULTS/ACTIONS
L22 CHECK CIRCUIT 818 (GY/W) FOR AN OPEN	
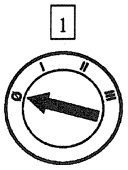 1 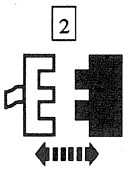 2 HEC C294 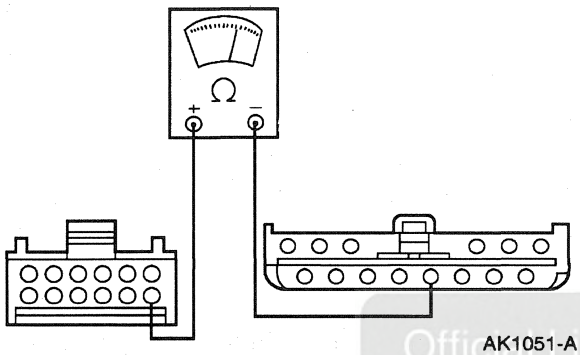 3 AK1051-A	3 Connect an ohmmeter between HEC C294-7 and the console transmission range indicator C319-4, Circuit 818 (GY/W). • Is the resistance 5 ohms or less? → **Yes** REPAIR the HEC. RETEST the system. → **No** REPAIR Circuit 818 (GY/W). RETEST the system.
L23 CHECK THE CONSOLE TRANSMISSION RANGE INDICATOR 2 INDICATION	
2 Second	1 Press and hold the brake pedal. • Is the console transmission range indicator 2 on? → **Yes** GO to **L26**. → **No** GO to **L24**.

Official Licensed Product Ford Motor Company

(Continued)

DIAGNOSIS AND TESTING (Continued)

PINPOINT TEST L: THE TRANSMISSION RANGE INDICATOR IS NEVER/ALWAYS ON (Continued)

TEST CONDITIONS	TEST DETAILS/RESULTS/ACTIONS
L24 COMMAND 2 INDICATOR ON	

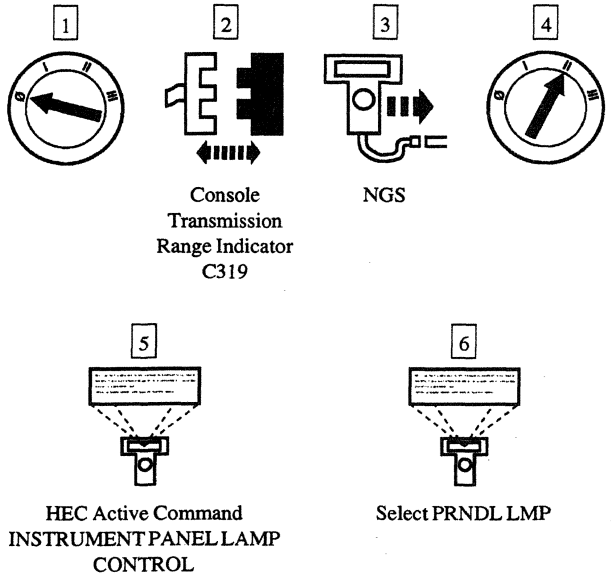

7 Scroll NGS Tester to select LOW2 and Trigger ON.

8 Connect an ohmmeter between the console transmission range indicator C319-5, Circuit 821 (BR/O) and ground.

- Is the resistance 5 ohms or less?

→ **Yes**
REPLACE the console transmission range indicator. RETEST the system.

→ **No**
GO to **L25**.

(Continued)

Official Licensed Product
Ford Motor Co.

DIAGNOSIS AND TESTING (Continued)

PINPOINT TEST L: THE TRANSMISSION RANGE INDICATOR IS NEVER/ALWAYS ON (Continued)

TEST CONDITIONS	TEST DETAILS/RESULTS/ACTIONS
L25 CHECK CIRCUIT 821 (BR/O) FOR AN OPEN	
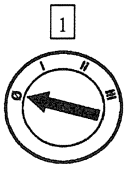 HEC C294 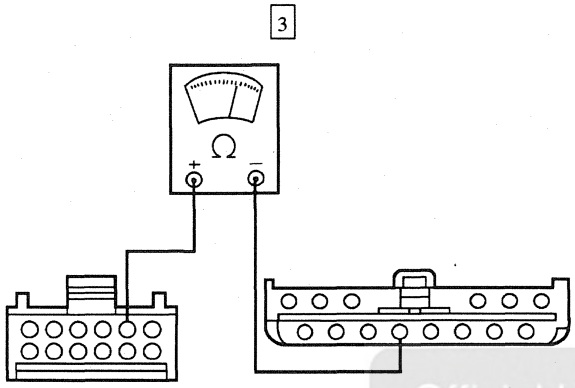 AK1053-A	3 Connect an ohmmeter between HEC C294-2 and the console transmission range indicator C319-5, Circuit 821 (BR/O). • Is the resistance 5 ohms or less? → **Yes** REPAIR the HEC. RETEST the system. → **No** REPAIR Circuit 821 (BR/O). RETEST the system.
L26 CHECK THE CONSOLE TRANSMISSION RANGE INDICATOR 1 INDICATION	
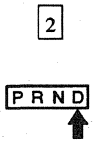 First	1 Press and hold the brake pedal. • Is the console transmission range indicator 1 on? → **Yes** GO to **L29**. → **No** GO to **L27**.

Official Licensed Product Ford Motor Company

(Continued)

DIAGNOSIS AND TESTING (Continued)

PINPOINT TEST L: THE TRANSMISSION RANGE INDICATOR IS NEVER/ALWAYS ON (Continued)

TEST CONDITIONS	TEST DETAILS/RESULTS/ACTIONS
L27 COMMAND 1 INDICATOR ON	

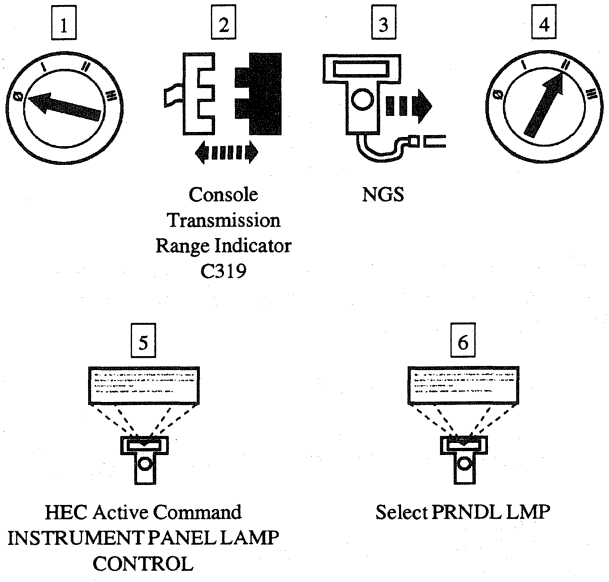

7 Scroll NGS Tester to select LOW1 and Trigger ON.

8 Connect an ohmmeter between the console transmission range indicator C319-6, Circuit 878 (PK/Y) and ground.

- Is the resistance 5 ohms or less?

→ **Yes**
REPLACE the console transmission range indicator. RETEST the system.

→ **No**
GO to **L28**.

(Continued)

Official Licensed Product
Ford Motor Company

DIAGNOSIS AND TESTING (Continued)

PINPOINT TEST L: THE TRANSMISSION RANGE INDICATOR IS NEVER/ALWAYS ON (Continued)

TEST CONDITIONS	TEST DETAILS/RESULTS/ACTIONS
L28 CHECK CIRCUIT 878 (PK/Y) FOR AN OPEN	
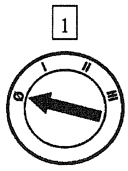 1 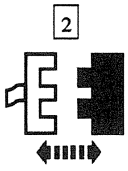 2 HEC C294 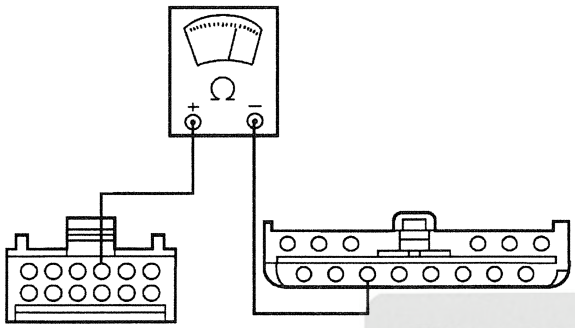 3 AK1055-A	3 Connect an ohmmeter between HEC C294-3 and the console transmission range indicator C319-6, Circuit 878 (PK/Y). • Is the resistance 5 ohms or less? → **Yes** REPAIR the HEC. RETEST the system. → **No** REPAIR Circuit 878 (PK/Y). RETEST the system.
L29 CHECK IF THE CONSOLE TRANSMISSION RANGE INDICATOR PARK INDICATION IS ON ALL THE TIME	
 1	• Is the console transmission range indicator P indicator on? → **Yes** GO to **L30**. → **No** GO to **L32**.

(Continued)

Official Licensed Product
Ford Motor Company

DIAGNOSIS AND TESTING (Continued)

PINPOINT TEST L: THE TRANSMISSION RANGE INDICATOR IS NEVER/ALWAYS ON (Continued)

TEST CONDITIONS	TEST DETAILS/RESULTS/ACTIONS
L30 CHECK THE CONSOLE TRANSMISSION RANGE INDICATOR PARK INDICATOR FOR A SHORT	
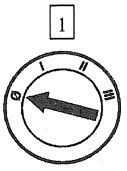 Console Transmission Range Indicator C319 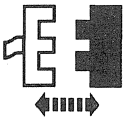 3 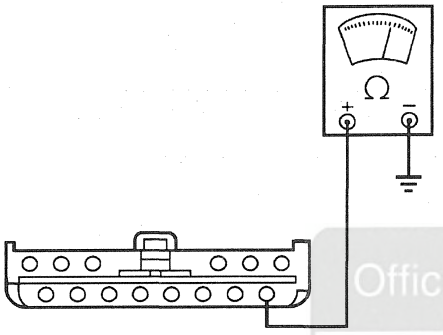 AK1056-A	3 Connect an ohmmeter between the console transmission range indicator C319-1, Circuit 466 (PK/O) and ground. • Is the resistance reading 10 kohms or less? → **Yes** GO to **L31**. → **No** REPLACE the console transmission range indicator. RETEST the system.
L31 CHECK CIRCUIT 466 (PK/O) FOR A SHORT	
1 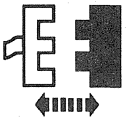 HEC C294 2 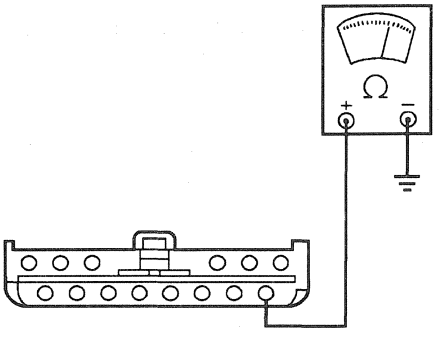 AK1056-A	2 Connect an ohmmeter between the console transmission range indicator C319-1, Circuit 466 (PK/O) and ground. • Is the resistance reading 10 kohms or less? → **Yes** REPAIR Circuit 466 (PK/O). RETEST the system. → **No** REPAIR the HEC. RETEST the system.

Official Licensed Product Ford Motor Company

(Continued)

DIAGNOSIS AND TESTING (Continued)

PINPOINT TEST L: THE TRANSMISSION RANGE INDICATOR IS NEVER/ALWAYS ON (Continued)

TEST CONDITIONS	TEST DETAILS/RESULTS/ACTIONS
L32 CHECK IF THE CONSOLE TRANSMISSION RANGE INDICATOR REVERSE INDICATION IS ON ALL THE TIME	
1 	• Is the console transmission range indicator R indicator on? → **Yes** GO to **L33**. → **No** GO to **L35**.
L33 CHECK THE CONSOLE TRANSMISSION RANGE INDICATOR REVERSE INDICATOR FOR A SHORT	
1 2 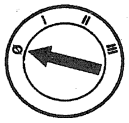 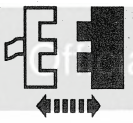 Console Transmission Range Indicator C319 3 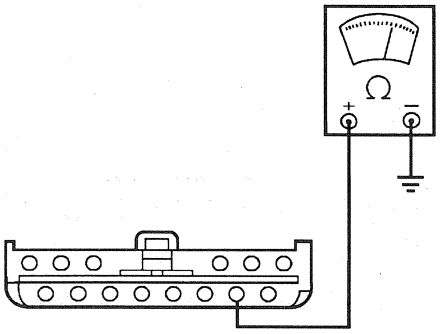 AK1046-A	3 Connect an ohmmeter between the console transmission range indicator C319-2, Circuit 817 (Y/LB) and ground. • Is the resistance reading 10 kohms or less? → **Yes** GO to **L34**. → **No** REPLACE the console transmission range indicator. RETEST the system.

Ford Motor Company Licensed Product

(Continued)

DIAGNOSIS AND TESTING (Continued)

PINPOINT TEST L: THE TRANSMISSION RANGE INDICATOR IS NEVER/ALWAYS ON (Continued)

TEST CONDITIONS	TEST DETAILS/RESULTS/ACTIONS
L34 CHECK CIRCUIT 817 (Y/LB) FOR A SHORT TO GROUND	
1 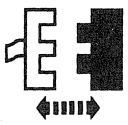 HEC C294 2 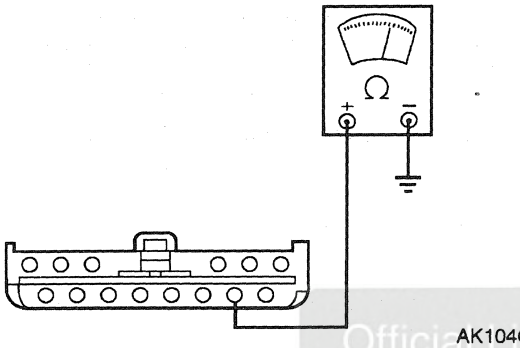 AK1046-A	2 Connect an ohmmeter between the console transmission range indicator C319-2, Circuit 817 (Y/LB) and ground. • Is the resistance reading 10 kohms or less? → **Yes** REPAIR Circuit 817 (Y/LB). RETEST the system. → **No** REPAIR the HEC. RETEST the system.
L35 CHECK IF THE CONSOLE TRANSMISSION RANGE INDICATOR NEUTRAL INDICATION IS ON ALL THE TIME	
1 	• Is the console transmission range indicator N indicator on? → **Yes** GO to **L36**. → **No** GO to **L38**.

(Continued)

Official Licensed Product Ford Motor Company

DIAGNOSIS AND TESTING (Continued)

PINPOINT TEST L: THE TRANSMISSION RANGE INDICATOR IS NEVER/ALWAYS ON (Continued)

TEST CONDITIONS	TEST DETAILS/RESULTS/ACTIONS
L36 CHECK THE CONSOLE TRANSMISSION RANGE INDICATOR NEUTRAL INDICATOR FOR A SHORT	
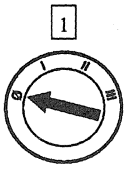 Console Transmission Range Indicator C319 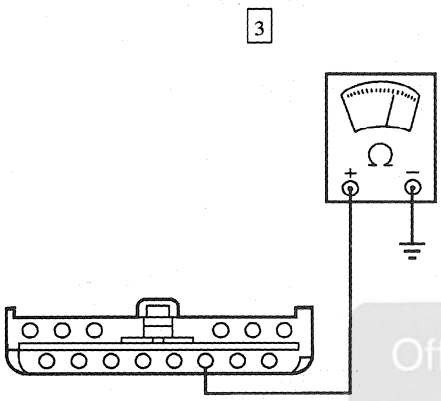 AK1048-A	3 Connect an ohmmeter between the console transmission range indicator C319-3, Circuit 814 (W/BK) and ground. • Is the resistance reading 10 kohms or less? → **Yes** GO to **L37**. → **No** REPLACE console transmission range indicator. RETEST system.
L37 CHECK CIRCUIT 814 (W/BK) FOR A SHORT	
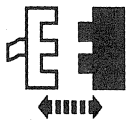 HEC C294 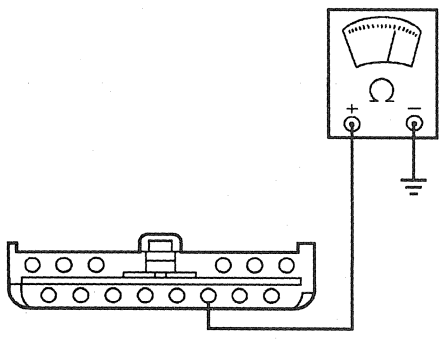 AK1048-A	2 Connect an ohmmeter between the console transmission range indicator C319-3, Circuit 814 (W/BK) and ground. • Is the resistance reading 10 kohms or less? → **Yes** REPAIR Circuit 814 (W/BK). RETEST the system. → **No** REPAIR the HEC. RETEST the system.

Official Licensed Product Chrysler Company

(Continued)

DIAGNOSIS AND TESTING (Continued)

PINPOINT TEST L: THE TRANSMISSION RANGE INDICATOR IS NEVER/ALWAYS ON (Continued)

TEST CONDITIONS	TEST DETAILS/RESULTS/ACTIONS
L38 CHECK IF THE CONSOLE TRANSMISSION RANGE INDICATOR DRIVE INDICATION IS ON ALL THE TIME	
1 	• Is the console transmission range indicator D indicator on? → **Yes** GO to **L39**. → **No** GO to **L41**.
L39 CHECK THE CONSOLE TRANSMISSION RANGE INDICATOR DRIVE INDICATOR FOR A SHORT	
1 2 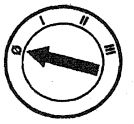 3 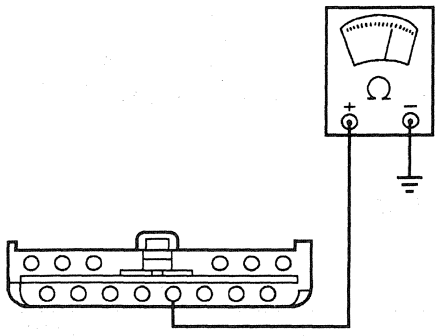 AK1050-A	3 Connect an ohmmeter between the console transmission range indicator C319-4, Circuit 818 (GY/W) and ground. • Is the resistance reading 10 kohms or less? → **Yes** GO to **L40**. → **No** REPLACE the console transmission range indicator. RETEST the system.

Ford Motor Company Licensed Product

(Continued)

DIAGNOSIS AND TESTING (Continued)

PINPOINT TEST L: THE TRANSMISSION RANGE INDICATOR IS NEVER/ALWAYS ON (Continued)

TEST CONDITIONS	TEST DETAILS/RESULTS/ACTIONS
L40 CHECK CIRCUIT 818 (GY/W) FOR A SHORT	
1 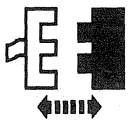 HEC C294 2 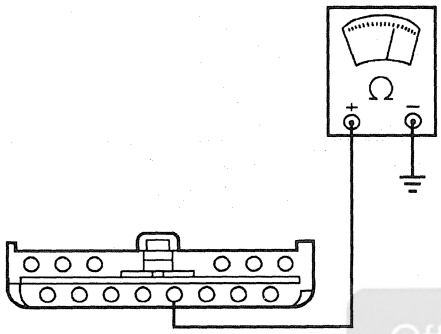 AK1050-A	2 Connect an ohmmeter between the console transmission range indicator C319-4, Circuit 818 (GY/W) and ground. • Is the resistance reading 10 kohms or less? → **Yes** REPAIR Circuit 818 (GY/W). RETEST the system. → **No** REPAIR the HEC. RETEST the system.
L41 CHECK IF THE CONSOLE TRANSMISSION RANGE INDICATOR 2 INDICATOR IS ON ALL THE TIME	
1 	• Is the console transmission range indicator 2 on? → **Yes** GO to **L42**. → **No** GO to **L44**.

(Continued)

Official Licensed Product
Ford Motor Company

DIAGNOSIS AND TESTING (Continued)

PINPOINT TEST L: THE TRANSMISSION RANGE INDICATOR IS NEVER/ALWAYS ON (Continued)

TEST CONDITIONS	TEST DETAILS/RESULTS/ACTIONS
L42 CHECK THE CONSOLE TRANSMISSION RANGE INDICATOR 2 INDICATOR FOR A SHORT	
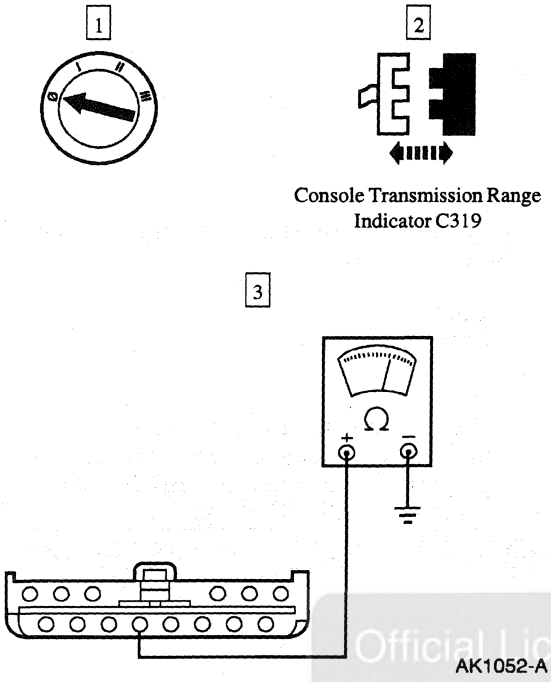	3 Connect an ohmmeter between the console transmission range indicator C319-5, Circuit 821 (BR/O) and ground. • Is the resistance reading 10 kohms or less? → **Yes** GO to **L43**. → **No** REPLACE the console transmission range indicator. RETEST the system.
L43 CHECK CIRCUIT 821 (BR/O) FOR A SHORT	
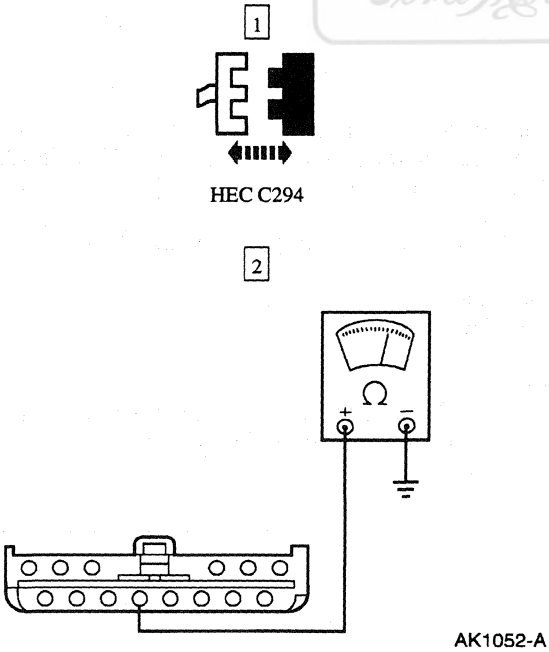	2 Connect an ohmmeter between the console transmission range indicator C319-5, Circuit 821 (BR/O) and ground. • Is the resistance reading 10 kohms or less? → **Yes** REPAIR Circuit 821 (BR/O). RETEST the system. → **No** REPAIR the HEC. RETEST the system.

Official Licensed Product
Ford Motor Company

(Continued)

DIAGNOSIS AND TESTING (Continued)

PINPOINT TEST L: THE TRANSMISSION RANGE INDICATOR IS NEVER/ALWAYS ON (Continued)

TEST CONDITIONS	TEST DETAILS/RESULTS/ACTIONS
L44 CHECK IF THE CONSOLE TRANSMISSION RANGE INDICATOR 1 INDICATOR IS ON ALL THE TIME	
1 	• Is the console transmission range indicator 1 indicator on? → **Yes** GO to **L45**. → **No** The instrument cluster and console transmission range indicator are working properly at this time. REVERIFY the symptom. RETEST the system.
L45 CHECK THE CONSOLE TRANSMISSION RANGE INDICATOR 1 INDICATOR FOR A SHORT	
1 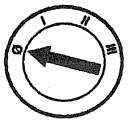 2 Console Transmission Range Indicator C319 3 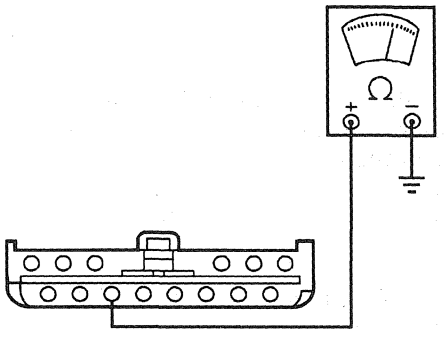 AK1054-A	3 Connect an ohmmeter between the console transmission range indicator C319-6, Circuit 878 (PK/Y) and ground. • Is the resistance reading 10 kohms or less? → **Yes** GO to **L46**. → **No** REPLACE the console transmission range indicator. RETEST the system.

Official Licensed Product Ford Motor Company

(Continued)

DIAGNOSIS AND TESTING (Continued)

PINPOINT TEST L: THE TRANSMISSION RANGE INDICATOR IS NEVER/ALWAYS ON (Continued)

TEST CONDITIONS	TEST DETAILS/RESULTS/ACTIONS
L46 CHECK CIRCUIT 878 (PK/Y) FOR A SHORT TO GROUND	
1 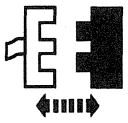 HEC C294 2 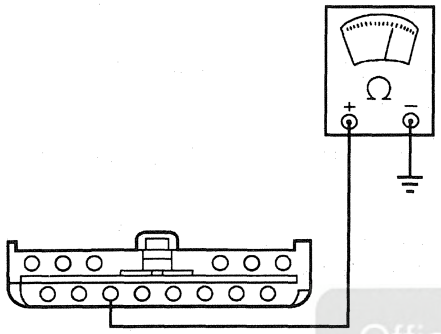 AK1054-A	2 Connect an ohmmeter between the console transmission range indicator C319-6, Circuit 878 (PK/Y) and ground. • Is the resistance reading 10 kohms or less? → **Yes** REPAIR Circuit 878 (PK/Y) for a short to ground. RETEST the system. → **No** REPAIR the HEC. RETEST the system.

Official Licensed Product
Ford Motor Company

PINPOINT TEST M: AN INDICATOR IS INOPERATIVE — LH TURN

TEST CONDITIONS	TEST DETAILS/RESULTS/ACTIONS
M1 CHECK LH FRONT TURN SIGNAL	
1 	2 Activate the LH turn signal. • Is the LH front turn signal operational? → **Yes** GO to **M2**. → **No** REFER to Section 417-01.

(Continued)

DIAGNOSIS AND TESTING (Continued)

PINPOINT TEST M: AN INDICATOR IS INOPERATIVE — LH TURN (Continued)

TEST CONDITIONS	TEST DETAILS/RESULTS/ACTIONS
M2 CHECK CIRCUIT 3 (LG/W)	
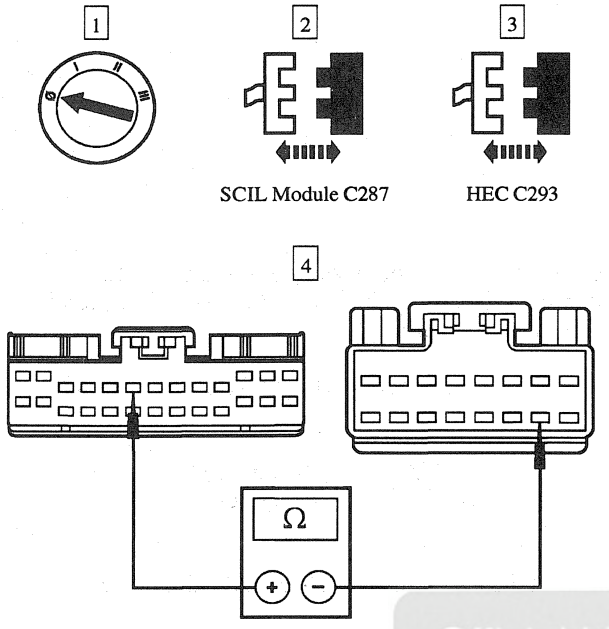	4 Measure the resistance between SCIL module C287-6, circuit 3 (LG/W), and HEC C293-22, circuit 3 (LG/W). • Is the resistance less than 5 ohms? → **Yes** REPAIR the HEC. RETEST the system. → **No** REPAIR circuit 3 (LG/W). TEST the system for normal operation.

Officially Licensed Product Ford Motor Company

PINPOINT TEST N: AN INDICATOR IS INOPERATIVE — RH TURN

TEST CONDITIONS	TEST DETAILS/RESULTS/ACTIONS
N1 CHECK RH FRONT TURN SIGNAL	
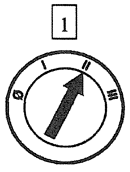	2 Activate the RH turn signal. • Is the RH front turn signal operational? → **Yes** GO to **M2.** → **No** REFER to Section 417-01.

(Continued)

DIAGNOSIS AND TESTING (Continued)

PINPOINT TEST N: AN INDICATOR IS INOPERATIVE — RH TURN (Continued)

TEST CONDITIONS	TEST DETAILS/RESULTS/ACTIONS
N2 CHECK CIRCUIT 2 (W/LB)	
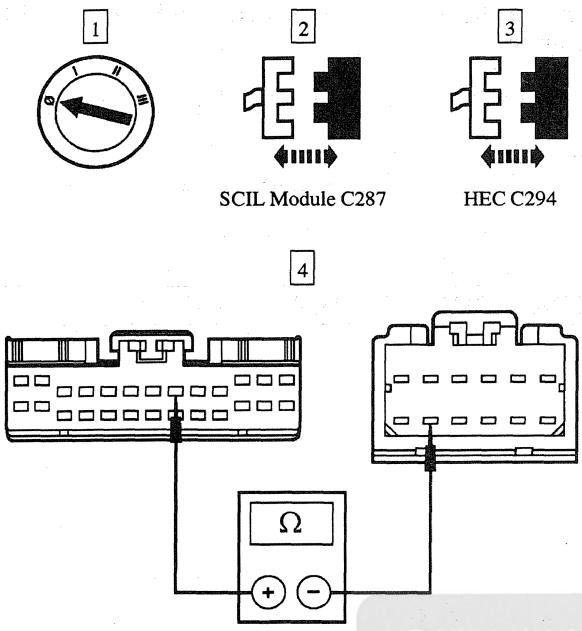	4 Measure the resistance between SCIL module C287-8, circuit 2 (W/LB), and HEC C294-11, circuit 2 (W/LB). • Is the resistance less than 5 ohms? → **Yes** REPAIR the HEC. RETEST the system. → **No** REPAIR circuit 2 (W/LB). TEST the system for normal operation.

Official Licensed Product
Ford Motor Company

PINPOINT TEST P: AN INDICATOR IS INOPERATIVE — HIGH BEAM

TEST CONDITIONS	TEST DETAILS/RESULTS/ACTIONS
P1 CHECK SCIL MODULE SELF TEST DTCs	
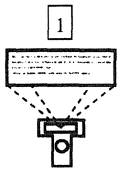 SCIL Module Self Test	• Is DTC B1509 retrieved? → **Yes** REFER to Section 417-01. → **No** GO to **P2**.
P2 CHECK THE HIGH BEAM INDICATOR OPERATION	
	1 Turn headlamp switch to the HEAD position.

(Continued)

DIAGNOSIS AND TESTING (Continued)

PINPOINT TEST P: AN INDICATOR IS INOPERATIVE — HIGH BEAM (Continued)

TEST CONDITIONS	TEST DETAILS/RESULTS/ACTIONS
P2 CHECK THE HIGH BEAM INDICATOR OPERATION (Continued)	
	2 Activate the multi-function switch to HIGH BEAM position. • Is the high beam indicator ON? → **Yes** The high beam indicator operation is normal. → **No** GO to **P3**.
P3 CHECK THE STEERING COLUMN/IGNITION/LIGHTING CONTROL MODULE OUTPUT	
1 SCIL Module Active Command WARNING LAMPS AND CHIME 2 Trigger HIGH BEAM ON	• Does high beam indicator turn ON? → **Yes** GO to **P7**. → **No** GO to **P4**.

Official Licensed Product
Ford Motor Company

(Continued)

DIAGNOSIS AND TESTING (Continued)

PINPOINT TEST P: AN INDICATOR IS INOPERATIVE — HIGH BEAM (Continued)

TEST CONDITIONS	TEST DETAILS/RESULTS/ACTIONS
P4 CHECK THE HIGH BEAM INDICATOR SUPPLY	
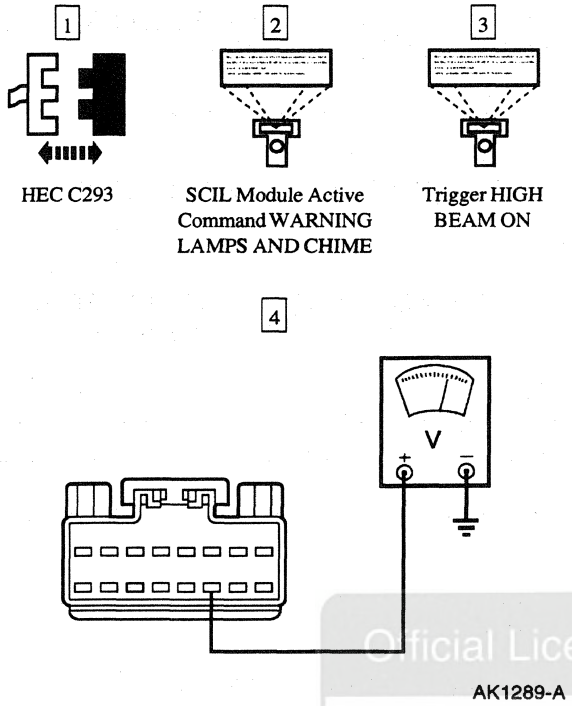	4 Connect a voltmeter to HEC C293-23, Circuit 697 (BR). • Is the voltage greater than 10 volts? → **Yes** REPAIR the HEC. RETEST the system. → **No** GO to **P5**.
P5 CHECK CIRCUIT 697 (BR)	
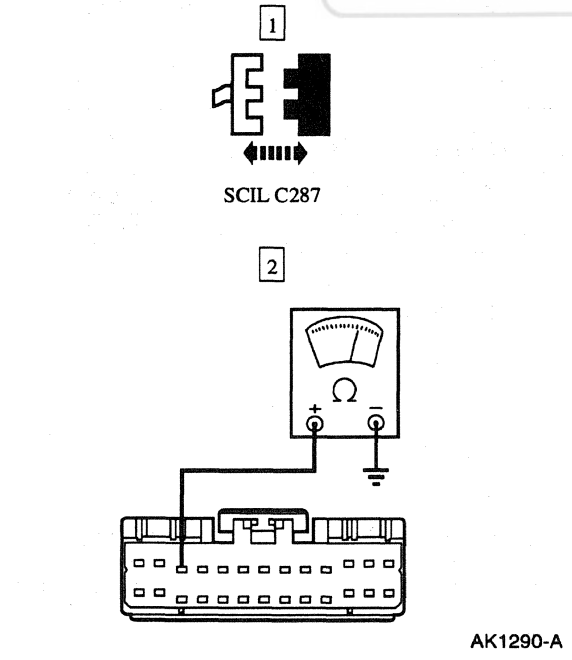	2 Connect an ohmmeter between SCIL C287-3, Circuit 697 (BR) and ground. • Is the resistance 10 kohms or less? → **Yes** REPAIR Circuit 697 (BR). RETEST the system. → **No** GO to **P6**.

Official Licensed Product
Ford Motor Company

(Continued)

DIAGNOSIS AND TESTING (Continued)

PINPOINT TEST P: AN INDICATOR IS INOPERATIVE — HIGH BEAM (Continued)

TEST CONDITIONS	TEST DETAILS/RESULTS/ACTIONS
P6 CHECK CIRCUIT 697 (BR) FOR AN OPEN	
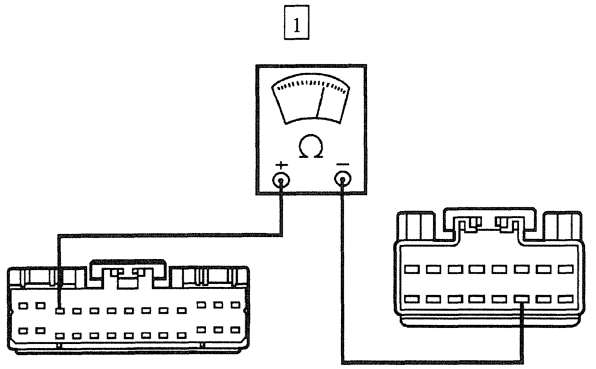 AK1291-A	1 Connect an ohmmeter between SCIL C287-3 and HEC C293-23, Circuit 697 (BR). • Is the resistance 5 ohms or less? → **Yes** REPAIR Circuit 697 (BR). RETEST the system. → **No** REPLACE the SCIL module; REFER to Section 419-10. RETEST the system.
P7 CHECK HIGH BEAM HEADLAMPS OPERATION	
	1 Turn the headlamp switch to the HEAD position. 2 Actuate the multi-function switch to HIGH BEAM position. • Do high beam headlamps come on? → **Yes** REPLACE the SCIL module; REFER to Section 419-10. RETEST the system. → **No** REFER to Section 417-01.

Official Licensed Product
Ford Motor Company

PINPOINT TEST Q: AN INDICATOR IS ALWAYS ON — HIGH BEAM

TEST CONDITIONS	TEST DETAILS/RESULTS/ACTIONS
Q1 CHECK THE STEERING COLUMN/IGNITION/LIGHTING CONTROL MODULE OUTPUT	
	1 Turn the headlamp switch OFF. • Is the high beam indicator ON? → **Yes** GO to **Q2.** → **No** System is OK. ADVISE the customer on operation.

(Continued)

DIAGNOSIS AND TESTING (Continued)

PINPOINT TEST Q: AN INDICATOR IS ALWAYS ON — HIGH BEAM (Continued)

TEST CONDITIONS	TEST DETAILS/RESULTS/ACTIONS
Q2 CHECK FOR A SHORTED CIRCUIT 697 (BR)	
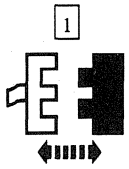 Steering Column/Ignition/Lighting Control Module C287	• Is the high beam indicator ON? → **Yes** REPAIR Circuit 697 (BR). RETEST the system. → **No** REPLACE the SCIL module. RETEST the system; REFER to Section 419-10.

REMOVAL AND INSTALLATION

Official Licensed Product
Ford Motor Company

Instrument Cluster

Removal

NOTE: Federal law requires that the odometer in any replacement speedometer must register the same mileage as that registered on the removed speedometer/odometer. Replacement speedometer/odometer and odometer modules with the same mileage preset to actual vehicle mileage are available through Ford electronic repair centers. In nearly all instances, the mileage continues to accumulate in the odometer memory even if the odometer does not display mileage. This mileage can usually be verified by the electronic repair centers. Contact the repair center for instructions to receive a replacement speedometer/odometer or odometer module with the mileage preset to actual mileage.

NOTE: If the actual vehicle mileage cannot be verified, the repair center will supply a speedometer/odometer module with the odometer display preset to zero (''0'') miles and the repair odometer segment (''s'') illuminated in the vicinity of the odometer display. In addition, an odometer mileage sticker is supplied with the replacement odometer. This sticker must display the estimated vehicle mileage and is to be affixed to the driver door.

NOTE: The instrument cluster is repaired as an assembly; do not disassemble cluster.

REMOVAL AND INSTALLATION (Continued)

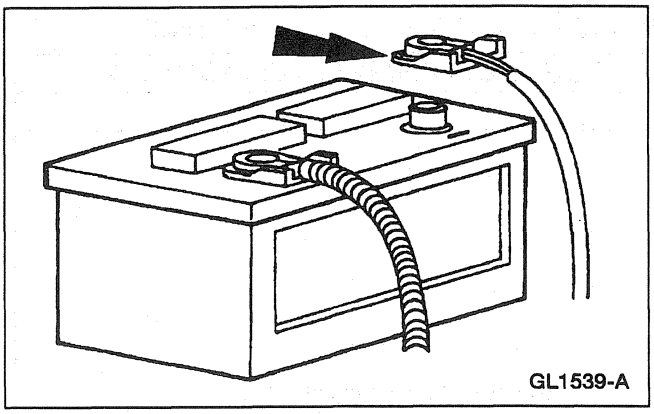

1. Disconnect the battery ground cable (14301).

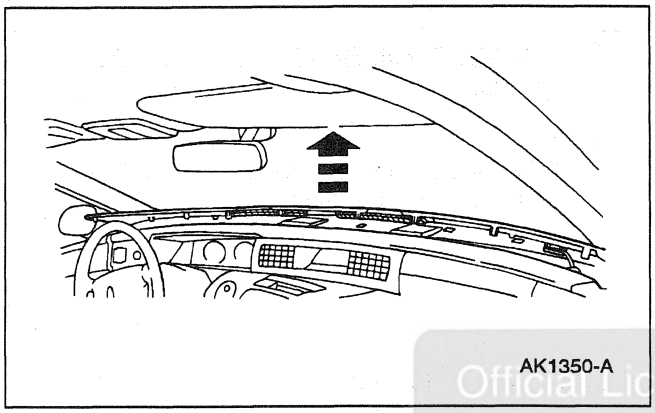

2. Lift the instrument panel defroster opening grille (044E82) high enough that retaining clips are above instrument panel.

Official Licensed Product
Ford Motor Company

3. Remove the Instrument Panel Cluster Finish Panel (044D71); refer to Section 501-12.

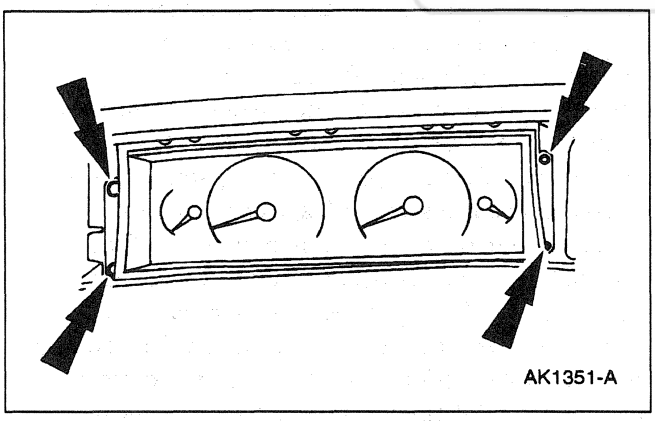

4. Remove the retaining screws from the instrument cluster (10N848).

REMOVAL AND INSTALLATION (Continued)

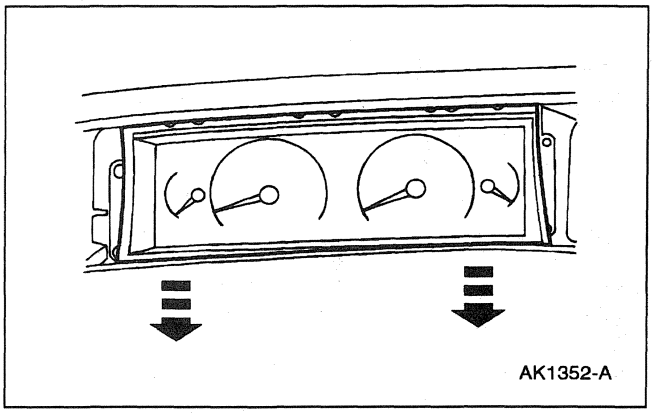

5. Rotate the bottom of the instrument cluster out first, disconnect the two electrical connectors and remove the instrument cluster.

Installation

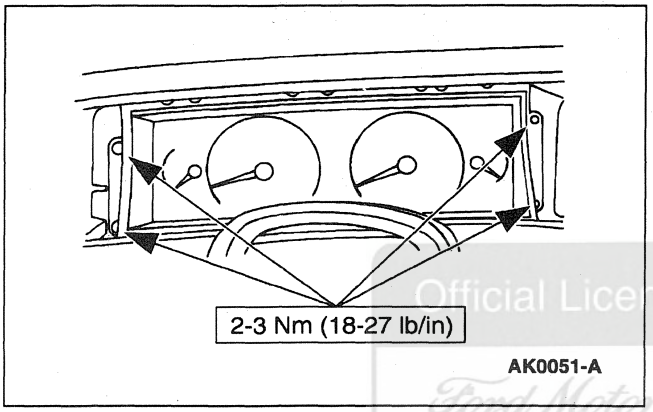

1. To install, reverse the removal procedure.

Official Licensed Product
Ford Motor Company

Indicator/Warning Bulb

Removal

1. Remove the instrument cluster; refer to Instrument Cluster.

REMOVAL AND INSTALLATION (Continued)

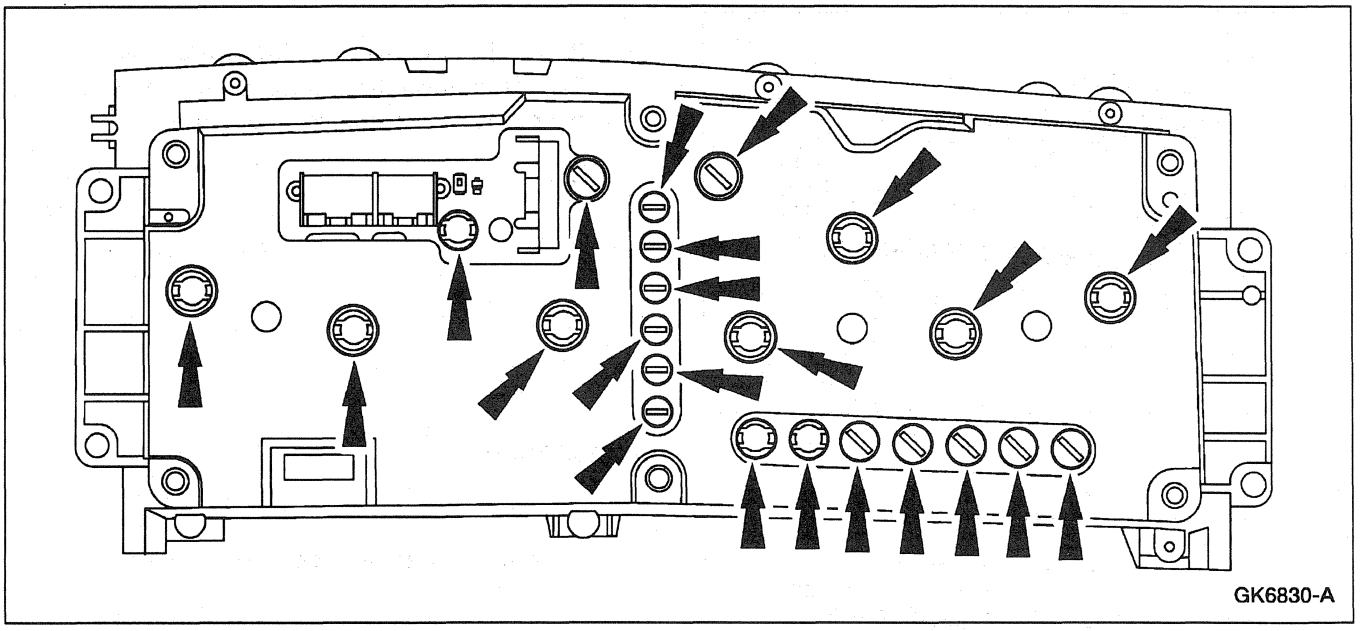

2. Remove the indicator bulbs and warning bulbs.

Installation

Official Licensed Product
Ford Motor Company

1. **NOTE:** When the battery (10655) is disconnected and reconnected, some abnormal drive symptoms may occur while the vehicle relearns its adaptive strategy. The vehicle may need to be driven 16 km (10 mi) or more to relearn the strategy.

   To install, reverse the removal procedure.

Cluster Lens

Removal

1. Remove the instrument cluster; refer to Instrument Cluster .

REMOVAL AND INSTALLATION (Continued)

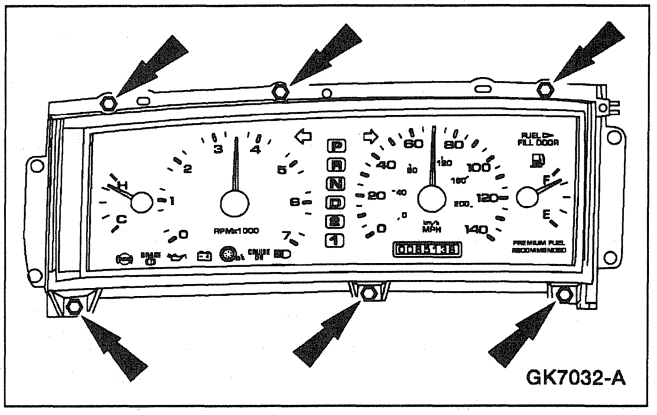

2. Remove the screws and remove the instrument cluster lens.

Installation

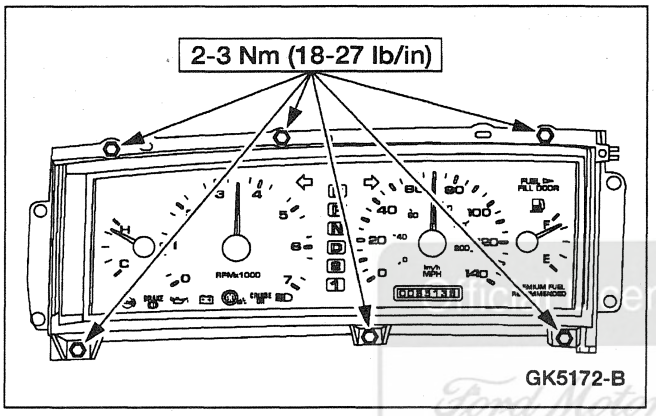

1. Position the instrument cluster lens and install the screws.

Licensed Product
Ford Motor Company

2. Install the instrument cluster; refer to Instrument Cluster.

SPECIFICATIONS

Torque Specifications

Description	Nm	Lb/In
Battery Ground Cable	7-10	62-89
Instrument Cluster Screws	2-3	18-27

SECTION 413-06 Horn

VEHICLE APPLICATION: Mark VIII

SUBJECT	PAGE
DESCRIPTION AND OPERATION	
Horn	413-06-2
DIAGNOSIS AND TESTING	
Horn	413-06-3
Inspection and Verification	413-06-3
Pinpoint Tests	413-06-4
Symptom Chart	413-06-3
REMOVAL AND INSTALLATION	
Horn	413-06-15
Switch — Horn Blow	413-06-16
SPECIFICATIONS	413-06-17

Official Licensed Product
Ford Motor Company

DESCRIPTION AND OPERATION

Horn

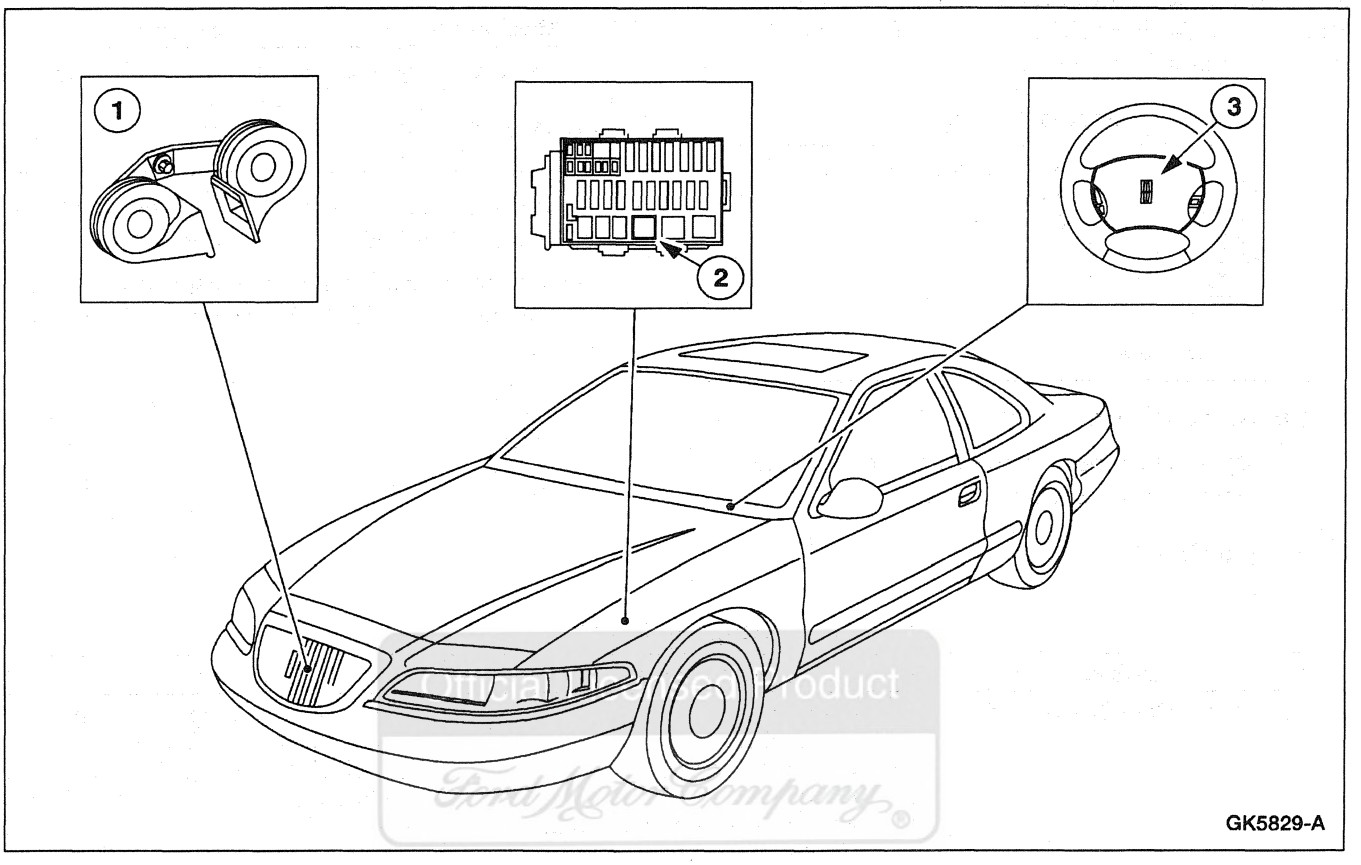

Item	Part Number	Description
1	13832	Horn
2	14N089	Relay
3	13A875	Horn Blow Switch

The horn system consists of the following:

- Horn (13832).
- Horn blow switch (13A875).
- Relay (14N089).

The horn blow switch closes the circuit to the horns with the use of a relay.

DIAGNOSIS AND TESTING

Horn

Refer to Electrical and Vacuum Troubleshooting Manual, Cell 44, Horns/Cigar Lighter for schematic and connector information.

Special Tool(s)

ST1137-A	73 Digital Multimeter or equivalent 105-R0051

Inspection and Verification

1. Verify the customer concern by operating the horn system to duplicate the condition.
2. Inspect to determine if one of the following mechanical or electrical concerns apply:

Visual Inspection Chart

Mechanical	Electrical
• Loose horn retaining bolt • Horns are touching surrounding sheet metal or other components	• Power distribution box fuse 8 (20A) • Circuitry

3. If the inspection reveals obvious concerns that can be readily identified, repair as required.
4. If the concerns remain after the inspection, determine the condition and proceed to Symptom Chart.

Symptom Chart

Symptom Chart

Condition	Possible Source	Action
• The Horn Does Not Sound	• Circuitry. • Horn relay. • Horn blow switch. • Horns . • Power distribution box fuse 8 (20A).	• If the horn is inoperative only with the anti-theft system, REFER to Section 419-01A. Otherwise, GO to Pinpoint Test A.
• The Horn Sounds Continuously	• Horn blow switch. • Switch circuitry. • Anti-theft alarm system. • Horn relay.	• GO to Pinpoint Test B.

Official Ford Product Ford Motor Company

DIAGNOSIS AND TESTING (Continued)

Pinpoint Tests

PINPOINT TEST A: THE HORN DOES NOT SOUND

TEST CONDITIONS	TEST DETAILS/RESULTS/ACTIONS
A1 CHECK POWER DISTRIBUTION BOX FUSE 8 (20A)	
1 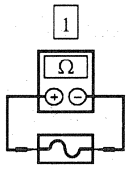 Power Distribution Box Fuse 8 (20A)	• Is the fuse OK? → **Yes** REINSTALL the fuse and GO to **A2**. → **No** GO to **A7**.
A2 CHECK THE HORN FEED	
1 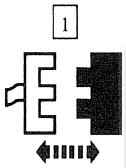 Horn C135 2 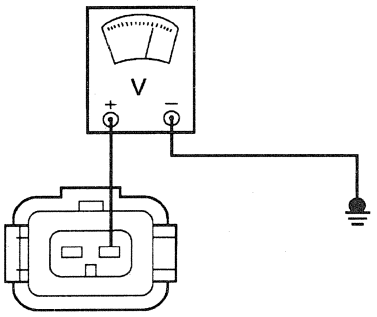 AK0644-A	2 Connect a voltmeter to horn C135, circuit 1 (DB). 3 Press the horn switch. • Is the voltage reading B+? → **Yes** GO to **A3**. → **No** GO to **A4**.

Official Licensed Product
Ford Motor Company

(Continued)

DIAGNOSIS AND TESTING (Continued)

PINPOINT TEST A: THE HORN DOES NOT SOUND (Continued)

TEST CONDITIONS	TEST DETAILS/RESULTS/ACTIONS
A3 CHECK CIRCUIT 57 (BK) FOR AN OPEN	
1 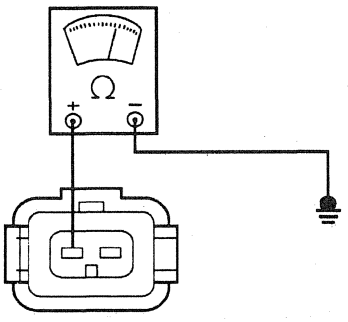 AK0643-A	1 Connect an ohmmeter between horn C135, circuit 57 (BK), and ground. • Is the resistance 5 ohms or less? → **Yes** REPLACE the horn. RETEST the vehicle. → **No** REPAIR circuit 57 (BK). RETEST the system.

(Continued)

Official Licensed Product
Ford Motor Company

DIAGNOSIS AND TESTING (Continued)

PINPOINT TEST A: THE HORN DOES NOT SOUND (Continued)

TEST CONDITIONS	TEST DETAILS/RESULTS/ACTIONS
A4 CHECK THE HORN FEED AT THE RELAY FOR OPEN	
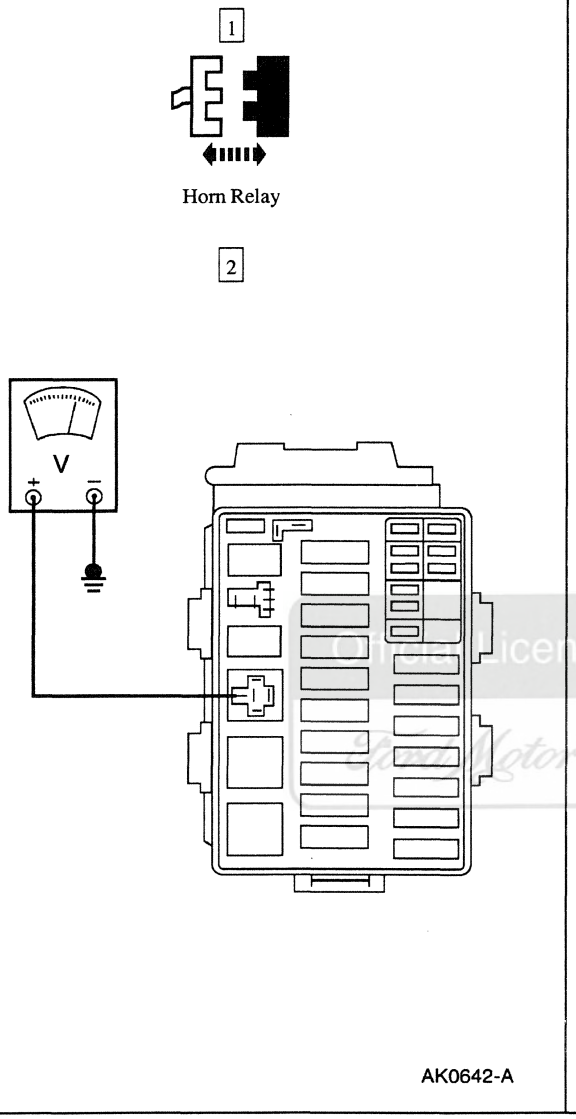	2 Connect a voltmeter to horn relay C155-30, circuit 460 (Y/LB). • Is the voltage reading B+? → **Yes** GO to **A5**. → **No** GO to **A6**.

Ford Motor Company Licensed Product

(Continued)

DIAGNOSIS AND TESTING (Continued)

PINPOINT TEST A: THE HORN DOES NOT SOUND (Continued)

TEST CONDITIONS	TEST DETAILS/RESULTS/ACTIONS
A5 CHECK HORN CIRCUIT 1 (DB) FOR AN OPEN	
[1] 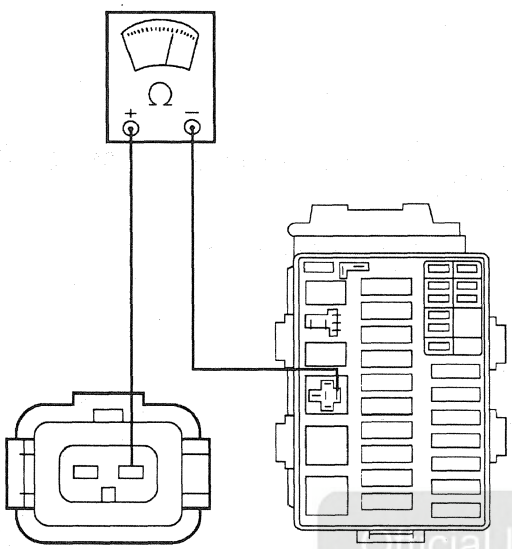 AK0641-A	[1] Connect an ohmmeter between horn relay C155-87, and horn C135, circuit 1 (DB). • Is the resistance 5 ohms or less? → **Yes** GO to **A6**. → **No** REPAIR circuit 1 (DB). RETEST the system.

Official Licensed Product
Ford Motor Company

(Continued)

DIAGNOSIS AND TESTING (Continued)

PINPOINT TEST A: THE HORN DOES NOT SOUND (Continued)

TEST CONDITIONS	TEST DETAILS/RESULTS/ACTIONS
A6 CHECK CIRCUIT 460 (Y/LB) FOR B+	
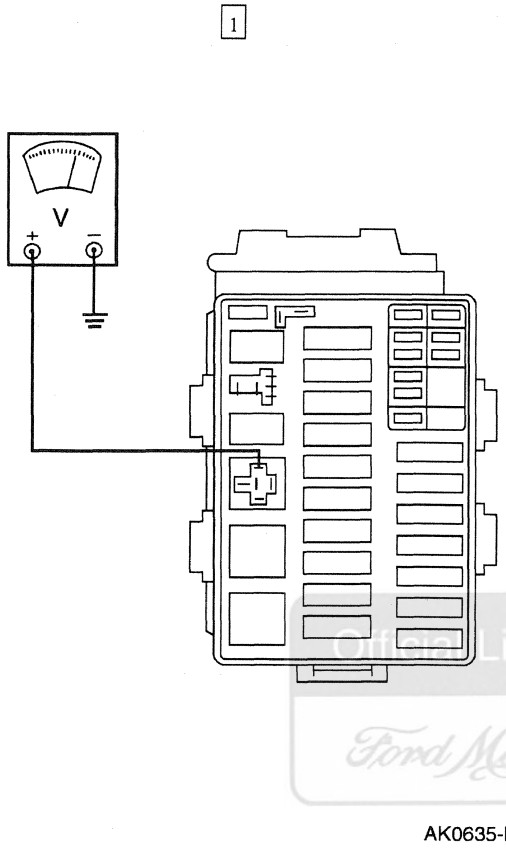 AK0635-B	1 Connect a voltmeter to horn relay C155-85, circuit 460 (Y/LB). • Is the voltage reading B+? → **Yes** GO to **A9**. → **No** GO to **A7**.

Online Licensed Product
Ford Motor Company

(Continued)

DIAGNOSIS AND TESTING (Continued)

PINPOINT TEST A: THE HORN DOES NOT SOUND (Continued)

TEST CONDITIONS	TEST DETAILS/RESULTS/ACTIONS
A7 CHECK CIRCUIT 6 (Y/LG) FOR GROUND	
1 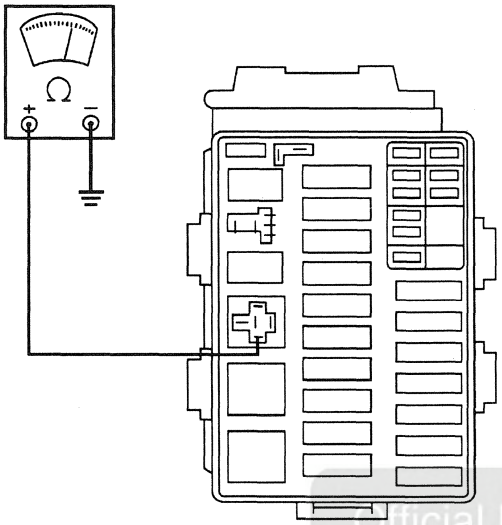 AK0637-B	1 Connect an ohmmeter between horn relay C155-86, circuit 6 (Y/LG), and ground. 2 Press the horn switch. • Is the resistance 5 ohms or less? → **Yes** REPLACE the horn relay. RETEST the system. → **No** GO to **A8**.

Official Licensed Product
Ford Motor Company

(Continued)

DIAGNOSIS AND TESTING (Continued)

PINPOINT TEST A: THE HORN DOES NOT SOUND (Continued)

TEST CONDITIONS	TEST DETAILS/RESULTS/ACTIONS
A8 CHECK CIRCUIT 6 (Y/LG) FOR AN OPEN	
1 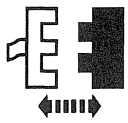 Steering Column C295 2 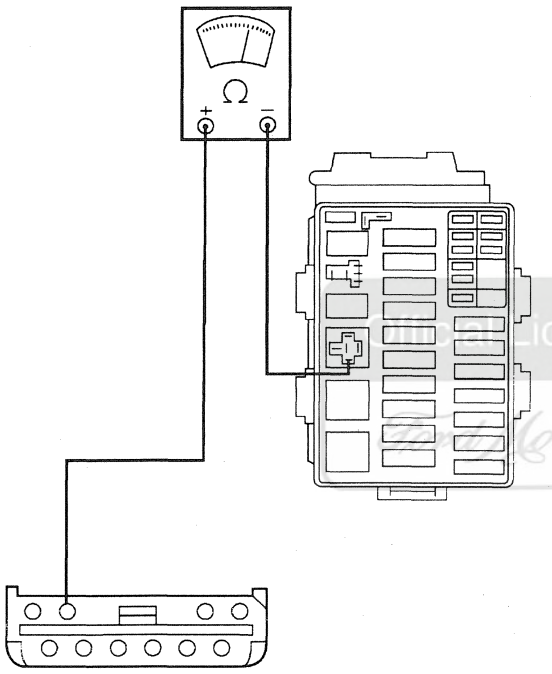 AK0638-B	2 Connect an ohmmeter between horn relay C155-86, and steering column C295-9, circuit 6 (Y/LG). • Is the resistance 5 ohms or less? → **Yes** GO to **A9**. → **No** REPAIR circuit 6 (Y/LG). RETEST the system.
A9 CHECK THE AIR BAG SLIDING CONTACT	
2 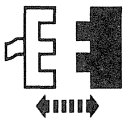 Steering Wheel 6-Pin C222	1 Remove the driver side air bag module; refer to Section 501-20B.

(Continued)

Unlicensed Product Ford Motor Company

DIAGNOSIS AND TESTING (Continued)

PINPOINT TEST A: THE HORN DOES NOT SOUND (Continued)

TEST CONDITIONS	TEST DETAILS/RESULTS/ACTIONS
A9 CHECK THE AIR BAG SLIDING CONTACT (Continued)	
3 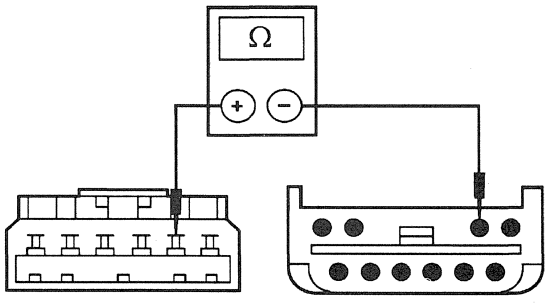 GK6887-A	3 Connect an ohmmeter between steering wheel 6-pin C222-5 and steering column C295-9, circuit 6 (Y/LG). • Is the resistance 5 ohms or less? → **Yes** GO to **A10**. → **No** REPLACE the air bag sliding contact. RETEST the system.
A10 CHECK CIRCUIT 460 (P/O)	
1 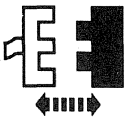 Horn Blow Switch C283 2 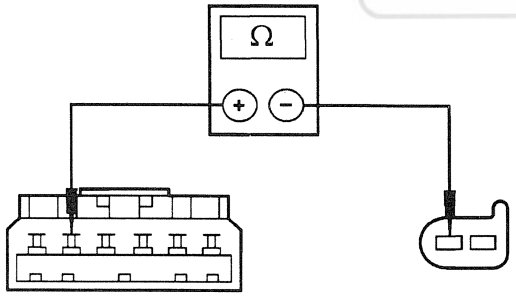 GK6888-A	2 Connect an ohmmeter between horn blow switch C283 and steering wheel 6-pin C222-5, circuit 460 (P/O). • Is the resistance 5 ohms or less? → **Yes** GO to **A11**. → **No** REPAIR circuit 460 (P/O). RETEST the system.

Official Licensed Product
Ford Motor Co.

(Continued)

DIAGNOSIS AND TESTING (Continued)

PINPOINT TEST A: THE HORN DOES NOT SOUND (Continued)

TEST CONDITIONS	TEST DETAILS/RESULTS/ACTIONS
A11 CHECK CIRCUIT 57 (BK) FOR GROUND	
1 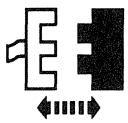 Horn Blow Switch C282 2 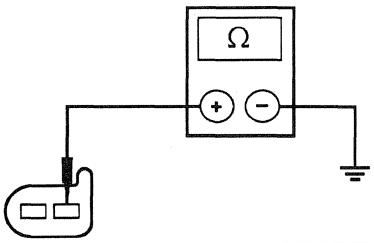 GK6889-A	2 Connect an ohmmeter between horn blow switch C282, circuit 57 (BK), and ground. • Is the resistance 5 ohms or less? → **Yes** REPLACE the horn blow switch. RETEST the system. → **No** REPAIR circuit 57 (BK). RETEST the system.

Official Licensed Product
Ford Motor Company

DIAGNOSIS AND TESTING (Continued)

PINPOINT TEST B: THE HORN SOUNDS CONTINUOUSLY

TEST CONDITIONS	TEST DETAILS/RESULTS/ACTIONS
B1 CHECK HORN SWITCH CIRCUIT FOR SHORT	
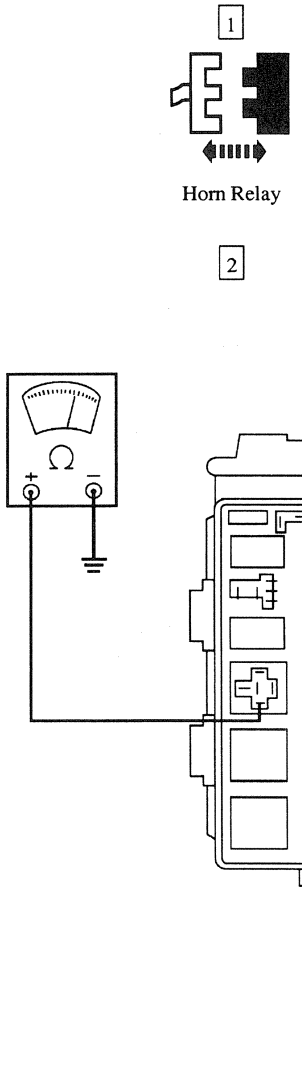	2 Connect an ohmmeter between horn relay C155-86, circuit 6 (Y/LG), and ground. • Is the resistance 100 ohms or less? → **Yes** LEAVE the ohmmeter connected and GO to **B2**. → **No** REPLACE the horn relay. RETEST the system.

Ford Motor Company Licensed Product

(Continued)

DIAGNOSIS AND TESTING (Continued)

PINPOINT TEST B: THE HORN SOUNDS CONTINUOUSLY (Continued)

TEST CONDITIONS	TEST DETAILS/RESULTS/ACTIONS
B2 CHECK CIRCUIT 6 (Y/LG) FOR A SHORT TO GROUND	
1 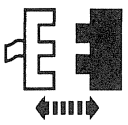 Steering Column C295 2 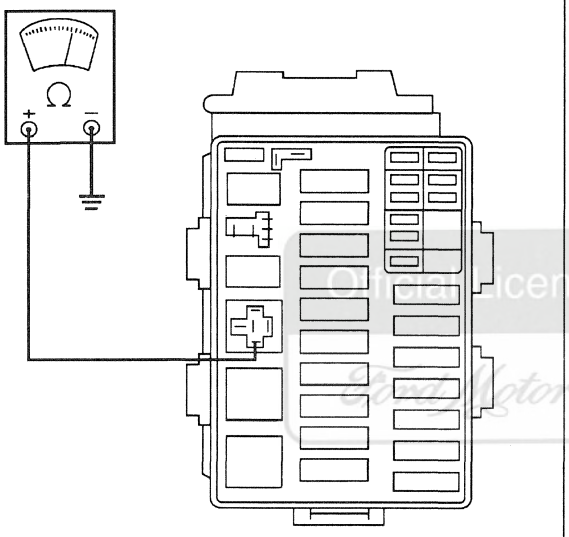 AK0637-B	2 Check the resistance reading. • Is the resistance 100 ohms or less? → **Yes** REPAIR circuit 6 (Y/LG) for short to ground. RETEST the system. → **No** LEAVE the ohmmeter connected and GO to **B3**.
B3 CHECK THE SLIDING AIR BAG CONTACT FOR A SHORT TO GROUND	
2 Steering Column C295 3 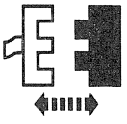 Steering Wheel 6-Pin C222	1 Remove the driver side air bag module ; refer to Section 501-20B.

(Continued)

Official Licensed Product Ford Motor Company

DIAGNOSIS AND TESTING (Continued)

PINPOINT TEST B: THE HORN SOUNDS CONTINUOUSLY (Continued)

TEST CONDITIONS	TEST DETAILS/RESULTS/ACTIONS
B3 CHECK THE SLIDING AIR BAG CONTACT FOR A SHORT TO GROUND (Continued)	
4 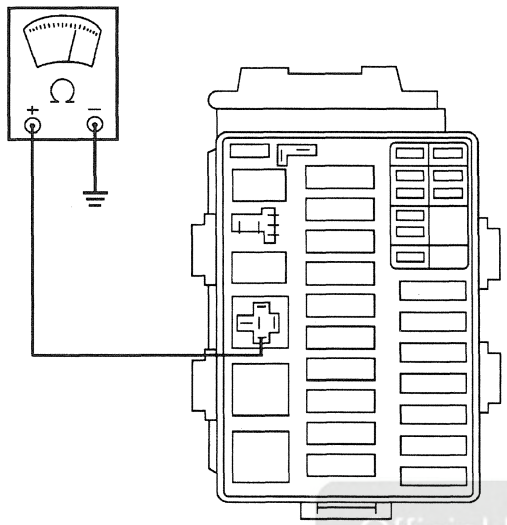 AK0637-B	4 Check the resistance reading. • Is the resistance 100 ohms or less? → **Yes** REPLACE the air bag sliding contact. RETEST the system. → **No** REPLACE the horn blow switch. RETEST the system.

Official Licensed Product
Ford Motor Company

REMOVAL AND INSTALLATION

Horn

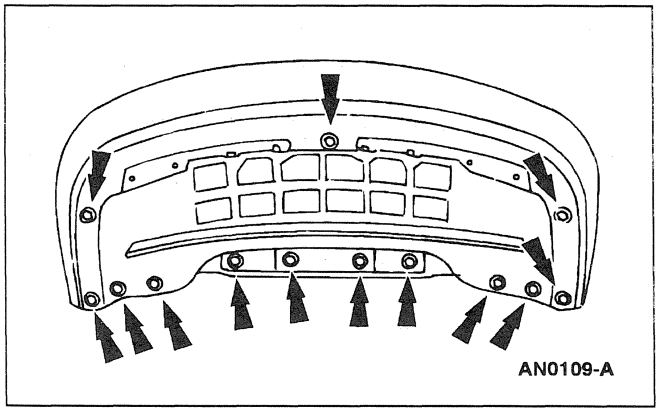
AN0109-A

1. Remove screws and front valance panel (17626).

REMOVAL AND INSTALLATION (Continued)

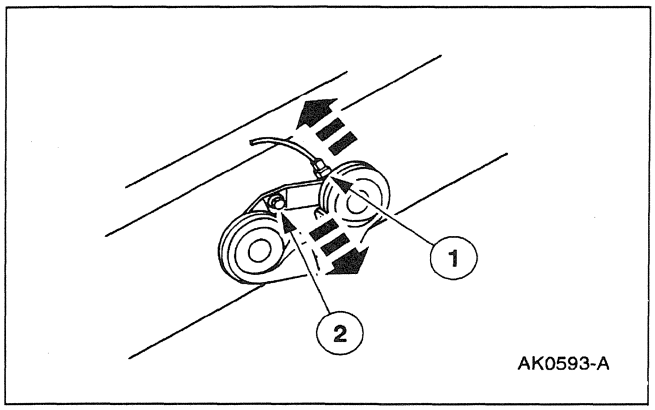

2. Remove the horn (13832).
   1 Disconnect the electrical connector.
   2 Remove the bolt and remove the horn.

Installation

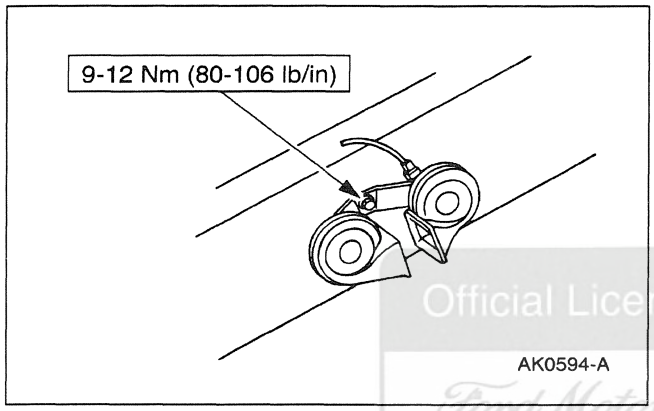

1. To install, reverse the removal procedure.

Official Licensed Product
Ford Motor Company

Switch — Horn Blow

Removal

1. **WARNING: ALWAYS WEAR SAFETY GLASSES WHEN REPAIRING AN AIR BAG VEHICLE AND WHEN HANDLING AN AIR BAG.**

   Center the wheels to the straight ahead position.

2. Remove the driver side air bag module (043B13) ; refer to Section 501-20B.

REMOVAL AND INSTALLATION (Continued)

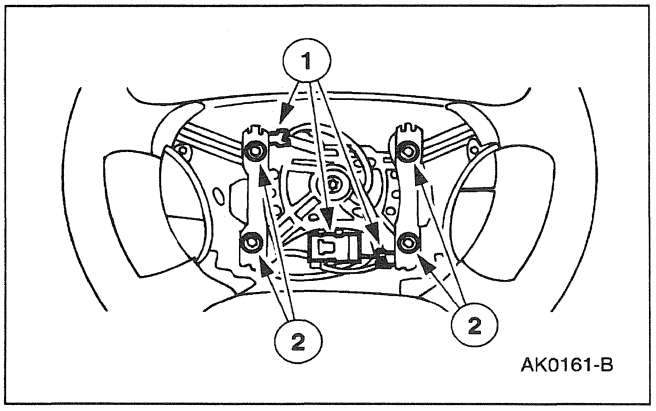

3. Remove the horn blow switch (13A875).
   1 Disconnect the electrical connectors.
   2 Remove the bolts and the horn blow switch.

Installation

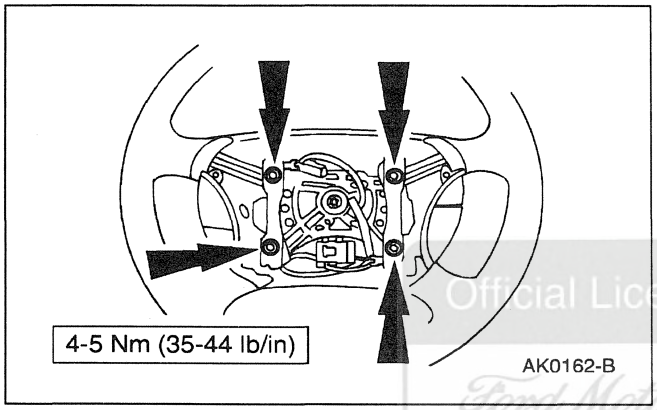

1. To install, reverse the removal procedure.

Official Licensed Product
Ford Motor Company

SPECIFICATIONS

Torque Specifications

Description	Nm	Lb/In
Horn Bolt	9-12	80-106
Horn Blow Switch Bolts	4-5	35-44

SECTION 413-08 Driver Information/Message Center

VEHICLE APPLICATION: Mark VIII

SUBJECT **PAGE**

DESCRIPTION AND OPERATION
Message Center 413-08-2
DIAGNOSIS AND TESTING
Message Center 413-08-5
DSM Active Command Index 413-08-12
DSM Diagnostic Trouble Code (DTC) Index 413-08-10
DSM Parameter Identification (PID) Index 413-08-12
Message Center (MC) Indicator Module Active Command Index 413-08-10
Message Center (MC) Indicator Module Diagnostic Trouble Code (DTC) Index 413-08-9
Message Center (MC) Indicator Module Parameter Identification (PID) Index 413-08-9
Inspection and Verification 413-08-6
Message Center Indicator Module On-Board Diagnostic Test 413-08-7
Pinpoint Tests 413-08-15
Symptom Chart 413-08-13
REMOVAL AND INSTALLATION
Message Center Assembly — Indicator Lamp Module Bulb 413-08-103
Message Center Assembly — Message Center Indicator 413-08-102
Message Center Switch Module 413-08-104
SPECIFICATIONS 413-08-105

Ford Motor Company

DESCRIPTION AND OPERATION

Message Center

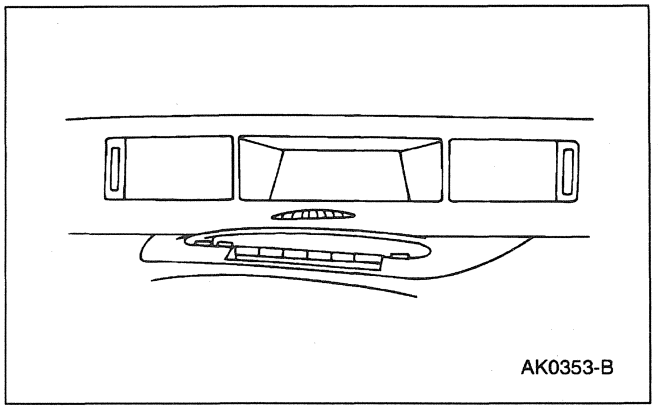

The message center consists of a message center indicator assembly and a message center switch module.

The message center includes the following modes of display:

- FUEL COMPUTER AND TRIP ODOMETER.
- DRIVER SETTINGS MENU.
- VEHICLE SETTINGS MENU.
- AUTOLAMP DELAY TIME.
- SYSTEM CHECK.
- PERSONALITY STATUS MESSAGES.
- COMPASS DISPLAY.
- DATE AND TIME DISPLAY.
- PHONE DISPLAY (if equipped).
- WARNING AND STATUS MESSAGES.

Fuel Computer and Trip Odometer

The fuel computer and trip odometer compute six functions. The RANGE, ECONOMY and TRIP ODOMETER switches are used to select and display:

- AVERAGE FUEL ECONOMY.
- INSTANT FUEL ECONOMY.
- DISTANCE TO EMPTY (DTE).
- FUEL REMAINING.
- TRIP 1 ODOMETER.
- TRIP 2 ODOMETER.

RANGE

The RANGE switch controls the following displays:

- DTE.
- FUEL REMAINING.

ECONOMY

The ECONOMY switch controls the following displays:

- AVERAGE FUEL ECONOMY.
- INSTANT FUEL ECONOMY.

TRIP ODOMETER

The TRIP ODOMETER switch controls the following displays:

- TRIP 1 ODOMETER.
- TRIP 2 ODOMETER.

The message center receives fuel computer and trip odometer data from the following modules:

- Fuel pump module.
- Anti-lock brake (ABS) control module.
- Powertrain control module (PCM)(12A650).

Official Licensed Product
Ford Motor Company

Driver Settings

The driver setting mode allows the driver to turn on or off selected features by means of the reset switch. The driver setting switch controls are:

- Express window.
- Auto lock.
- Horn chirp.
- Easy entry/exit (seat and steering column).
- Driver seat autoglide.
- Phone display (if equipped).
- Reverse tilt mirrors.

The message center indicator module receives/sends driver settings information to the following modules:

- Driver seat module.
- Driver door module.

DESCRIPTION AND OPERATION (Continued)

- Steering column/ignition/lighting (SCIL) control module.
- Cellular phone.

Vehicle Settings

The vehicle setting mode allows the driver to display and turn on or off selected vehicle features by means of the RESET switch, with the exception of the autolamps delay time display. The vehicle setting switch controls:

- Traction control.
- English/metric display.
- Wipers/headlamp (ON or OFF).
- Autolamps delay time (display only).
- Oil life.

The message center indicator module receives/sends vehicle settings information to the following modules:

- ABS control module.
- Electronic automatic temperature control (EATC) module.
- SCIL control module.
- PCM.

System Check

NOTE: The ignition switch must be in the RUN position for the air ride switch status, engine temp and traction control system status to be displayed during system check.

The system check function provides the driver information on the current status of certain vehicle functions. By pressing the SYSTEM CHECK switch on the message center switch module (10D996), the following messages will be displayed in the message center:

- OIL LIFE OK, CHANGE OIL SOON or OIL CHANGE REQUIRED.
- OIL LIFE LEFT (in percent of life remaining).
- LOW OIL LEVEL.
- VOLTAGE LEVEL OK or CHECK CHARGING SYSTEM.
- ENGINE TEMP OK or CHECK ENGINE TEMP.
- COOLANT LEVEL OK or LOW COOLANT LEVEL.
- WASHER FLUID LEVEL OK or LOW WASHER FLUID.
- DRIVER DOOR AJAR or DRIVER DOOR CLOSED.
- RIGHT DOOR AJAR or RIGHT DOOR CLOSED.
- TRUNK AJAR or TRUNK CLOSED.
- HEADLAMPS OK or CHECK HEADLAMPS.
- FRONT TURN LAMPS OK or CHECK FRONT TURN LAMPS.
- BRAKE LAMPS OK or CHECK BRAKE LAMPS.
- TAIL LAMPS OK or CHECK TAIL LAMPS.
- AIR RIDE SYSTEM OK, CHECK AIR RIDE SYSTEM or AIR RIDE SWITCH OFF.
- TRACTION CONTROL OK, CHECK TRACTION CONTROL or TRACTION CONTROL DISABLED (if equipped).
- FUEL LEVEL OK or LOW FUEL LEVEL.
- MILES TO EMPTY or KILOMETERS TO EMPTY.

Warning Messages

System warnings alert the driver to possible concerns in the vehicle operating systems. The message center indicator module will display all active warning messages for four seconds. The following messages will be displayed in the message center:

Door Ajar Warnings

- RIGHT DOOR AJAR

Is displayed when the passenger door is open with the ignition switch in the RUN position and the SCIL control module activates the message center indicator module through the standard corporate protocol (SCP) network.

- DRIVER DOOR AJAR

When the driver door is opened with the ignition switch in the RUN position, the driver door module activates the message center through the SCP network.

Engine Coolant Temperature Warning

When the engine temperature rises above a preset level, the PCM activates the message center indicator module CHECK ENGINE TEMP display through the SCP network.

Official Licensed Part Ford Motor Company

DESCRIPTION AND OPERATION (Continued)

Oil Level Warning

NOTE: If the vehicle is parked on a steep incline, the LOW OIL LEVEL warning may come on when the vehicle is started, even though the oil is at the correct level. The oil level is monitored while the engine is off, so the oil can drain into the oil pan to be measured. Some after-market devices such as remote starters if improperly installed, can cause the engine to start without alerting the oil monitoring system. This may also cause the LOW OIL LEVEL warning to come on when the vehicle is started, even though the oil is at the correct level.

When the engine oil level is low, the low oil level sensor activates the message center indicator module LOW OIL LEVEL warning.

Brake Lamps Out Warning

NOTE: The center high mount stoplamp is not monitored.

When a stoplamp bulb is out, the SCIL control module activates the message center indicator module CHECK BRAKE LAMPS display.

Charging System Warning

When there is a concern with the charging system, the battery charging circuit activates the message center indicator module CHECK CHARGING SYSTEM display.

Fuel Level Warning

When the distance to empty is less than 80 km (50 mi), the message center indicator module displays LOW FUEL LEVEL display.

Engine Coolant Level Warning

When the engine coolant level is low, the engine coolant level sensor activates the message center indicator module LOW ENGINE COOLANT display.

Headlamps Out Warning

When a low beam headlamp bulb is out, the SCIL control module activates the message center indicator module CHECK HEADLAMPS display through the SCP network.

Tail Lamps Out Warning

When a tail lamp is out, the SCIL control module activates the message center indicator module CHECK TAIL LAMPS display through the SCP network.

Front Turn Lamps Out Warning

When a front turn signal lamp is out, the SCIL control module activates the message center indicator module CHECK FRT TURN LAMPS display through the SCP network.

Washer Fluid Level Warning

When the windshield washer fluid is low, the windshield washer fluid level sensor activates the message center indicator module LOW WASHER FLUID display.

Luggage Compartment Door Ajar (TRUNK AJAR) Warning

When the luggage compartment door is open with the ignition switch in RUN, the SCIL control module activates the message center indicator module TRUNK AJAR display through the SCP network.

Traction Control Warnings

- CHECK TRACTION CONTROL is displayed when a concern with the traction control system is detected by the anti-lock brake system/traction control (ABS/TC) module. This activates the message center indicator module through the SCP network.
- TRACTION CONTROL DISABLED is displayed when the traction control is temporarily disabled due to an overheating condition. The ABS/TC module activates the message center indicator module through the SCP network.

Air Suspension Service Switch Warning

When the air suspension service switch is turned OFF, the air suspension service switch activates the message center AIR RIDE SWITCH OFF display.

Air Suspension System Warning

When an air suspension system concern is detected by the steering/suspension module (SSM), it activates the message center CHECK AIR RIDE SYSTEM display.

Oil Life Warning

The engine oil level temperature sensor, the ABS control module, the odometer data and the PCM rpm data are used by the message center indicator module to calculate oil life.

Official Licensed Product

DESCRIPTION AND OPERATION (Continued)

The message center indicator module displays:

- CHANGE OIL SOON when engine oil life reaches five percent.
- OIL CHANGE REQUIRED when engine oil life reaches zero percent.

Data Error Warnings

- ENGINE TEMP DATA ERR is displayed when the PCM detects a concern with the engine temperature sensor, and it activates the message center indicator module through the SCP network, or the message center indicator module does not receive the engine temperature data from the PCM.
- GEAR DISPLAY DATA ERR is displayed when a gear display data error is detected by the hybrid electronic cluster (HEC) and activates the message center indicator module through the SCP network.

Transmission Warnings

- CHECK TRANSMISSION is displayed when an internal transmission fault is detected by the PCM which activates the message center indicator module through the SCP network.
- TRANSMISSION OVERHEAT is displayed when the transmission fluid temperature rises above a preset level, monitored by the PCM which activates the message center indicator module through the SCP network.

Indicator Lamp Module

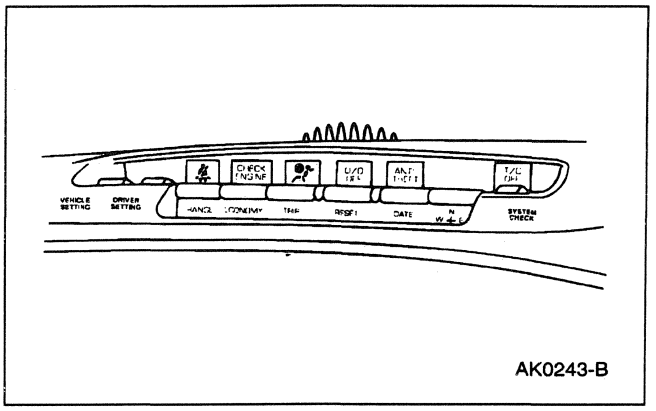

The indicator lamp module (part of message center switch module) includes indicator lamps for:

- Safety belt.
- Check engine (MIL).
- Air bag concerns.
- Overdrive OFF.
- Anti-theft status.
- Traction control OFF.

Official Licensed Product Ford Motor Company

DIAGNOSIS AND TESTING

Message Center

Refer to Electrical and Vacuum Troubleshooting Manual, Cell 69, Message Center for schematic and connector information.

Refer to Electrical and Vacuum Troubleshooting Manual, Cell 123, Power Memory Seats for schematic and connector information.

Refer to Electrical and Vacuum Troubleshooting Manual, Cell 122, Power Lumbar Seats for schematic and connector information.

DIAGNOSIS AND TESTING (Continued)

Refer to Electrical and Vacuum Troubleshooting Manual, Cell 65, Warning Indicators for schematic and connector information.

Special Tool(s)

ST1137-A	73 Digital Multimeter or equivalent 105-R0051
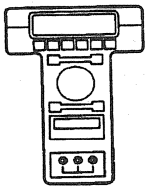 ST1217-A	New Generation STAR (NGS) Tester or equivalent 418-F048 (007-00500)

Inspection and Verification

1. Verify the customer concern by operating the message center to duplicate the condition.
2. Verify the customer concern by observing the indicators to determine if they are operating properly with the ignition switch:
   - In RUN without the engine running.
   - In START before the ignition switch is released.
   - In RUN with the engine running.
3. Inspect to determine if one or more of the following mechanical or electrical concerns apply:

Visual Inspection Chart

Mechanical	Electrical
• Engine coolant level • Engine oil level • Windshield washer fluid level	• Damaged fuse — Power distribution box fuse 19 (30A) — Fuse junction panel fuse 20 (10A) — Fuse junction panel fuse 4 (10A) — Fuse junction panel fuse 28 (10A) — Fuse junction panel fuse 5 (10A) — Fuse junction panel fuse 35 (10A) • Damaged switches/sensors • Circuitry open/shorted

4. If the inspection reveals obvious concerns that can be readily identified, repair as required.
5. If the concern remains after the inspection, connect the New Generation STAR (NGS) Tester to the data link connector (DLC) located beneath the instrument panel and select the vehicle to be tested from the NGS menu. If the NGS does not communicate with the vehicle:
   - check that the program card is properly installed.
   - check the connections to the vehicle.
   - check the ignition switch position.
6. If the NGS still does not communicate with the vehicle, refer to the New Generation STAR Tester manual.
7. Perform the DATA LINK DIAGNOSTIC TEST. If the NGS responds with:
   - CKT914, CKT915 or CKT70 = ALL ECUS NO RESP/NOT EQUIP, refer to Section 418-00.
   - NO RESPONSE/NOT EQUIP for message center (MC) indicator module, go to Pinpoint Test B.
   - NO RESP/NOT EQUIP for DSM module, go to Pinpoint Test A.
   - SYSTEM PASSED, retrieve and record the continuous diagnostic trouble codes (DTCs), erase the continuous DTCs and perform self-test diagnostics for the DSM and MC indicator module.
8. If DTCs are retrieved, go to Message Center (MC) Module Diagnostic Trouble Code (DTC) Index or DSM Diagnostic Trouble Code (DTC) Index to continue diagnostics.
9. If the self-test is passed and no DTCs are retrieved, refer to Message Center Indicator Module On-Board Diagnostic Test:
   - ROM Level and Checksum Test.
   - EEPROM Level and Checksum Test.
   - Display Test.

If the message center indicator module passes the on-board diagnostic tests, proceed to Symptom Chart to continue diagnostics.

Official Licensed Product Ford Motor Company

DIAGNOSIS AND TESTING (Continued)

Message Center Indicator Module On-Board Diagnostic Test

To perform Message Center Indicator Module On-Board Diagnostic Test:

- Press the RANGE and COMPASS switches while turning the ignition switch from OFF to RUN.
- Press the RANGE switch to advance the message center indicator module to the next test group.
- Cycle the ignition from RUN to OFF and back to RUN to return to normal operation.

ROM Level and Checksum Test

This test displays the read only memory (ROM) level of the message center indicator module. It also displays a ROM test checksum. The ROM checksum display (CHK) must display 00. If it is not 00, replace the message center indicator module.

EEPROM Level and Checksum Test

This test displays the electrically erasable programmable read only memory (EEPROM) level of the message center indicator module. It also displays an EEPROM test checksum. The EEPROM checksum display (CHK), must display 0000. If it is not 0000, replace the message center indicator module.

Display Test

This test displays the same character in all 24 character positions. The initial character is all dots. Press the VEHICLE SETTINGS or TRIP ODO buttons to sequence through the entire character set. Replace the message center indicator module if characters are not displayed properly.

Lamp Test

This test lights each one of the warning indicators that the message center indicator module drives (FASTEN SAFETY BELT, O/D OFF, and TRACTION CONTROL OFF) in sequence. To sequence through the indicators, press the TRIP ODO button.

- Test 1 illuminates the fasten safety belt indicator.
- Tests 2-6 are inactive and produce no output.
- Test 7 illuminates the traction control off indicator.
- Test 8 illuminates the O/D off indicator.

These tests can be used with the corresponding pinpoint tests to verify if the message center is working properly when NGS Tester is not available and the pinpoint tests requires the indicator to be commanded on.

Final Date

This is a coded date that indicates when the message center indicator module was manufactured and is used when requesting assistance from the hotline.

Serial Number

This unique serial number is assigned during manufacturing and is used when requesting assistance from the hotline.

A/D Channel Tests

The following tests display the status of each of the analog inputs to the message center indicator module. To sequence through the different A/D tests, press the VEHICLE SETTINGS button to sequence forward, and the TRIP ODO button to sequence backward. For the analog inputs associated with each test, refer to A/D Input Table. These tests can be used with the pinpoint tests to verify if the message center indicator module is working properly when NGS Tester is not available to monitor PIDs.

A/D Input Table

Test Number	Analog Input Voltage Tested
A/D 0	Battery
A/D 1	Spare (N/A)
A/D 2	Fuel Level
A/D 3	Oil Temperature
A/D 4	Spare (N/A)
A/D 5	Spare (N/A)
A/D 6	Switch Bank #2
A/D 7	Switch Bank #1

Digital Port Tests

The following tests display the status of each of the digital (discrete) inputs to the message center indicator module. To sequence through the different Digital Port tests, press the VEHICLE SETTINGS switch to sequence forward, and the TRIP ODO switch to sequence backward. See the table below for the digital inputs associated with each test. These tests can be used with the corresponding pinpoint tests to verify if the message center indicator module is working properly.

Unlicensed Product Ford Motor Company

DIAGNOSIS AND TESTING (Continued)

Digital Port Tests

Test #	Port Function	Test Used
PORT A	Engineering (N/A)	(N/A)
PORT B	Engineering (N/A)	(N/A)
PORT C	Engineering (N/A)	(N/A)
PORT D	Engineering (N/A)	(N/A)
PORT E	Engineering (N/A)	(N/A)

(Continued)

Digital Port Tests

Test #	Port Function	Test Used
PORT F	Digital Input Ports	Digital Port
PORT G	Engineering (N/A)	(N/A)
PORT H	Engineering (N/A)	(N/A)

Refer to the Port F Bit Definition table below.

Port F Bit Definition

Port F	Bit 7	Bit 6	Bit 5	Bit 4	Bit 3	Bit 2	Bit 1	Bit 0
Bit Function	Oil Level	Washer Fluid Level	Coolant Level	Air Ride Switch	Air Ride Warning	Run Detect	N/A	N/A
Bit = 0	Oil Level OK	Low Washer Fluid	Coolant Level OK	Air Ride Switch OFF	Air Ride System OK	Run Voltage ON	N/A	N/A
Bit = 1	Low Oil Level	Washer Fluid OK	Low Coolant Level	Air Ride Switch ON	Check Air Ride Switch	Run Voltage OFF	N/A	N/A
Message Center Indicator Module Pin	C208-13	C208-31	C208-29	C208-12	C208-22	C208-10	N/A	N/A

Original Licensed Product Ford Motor Company

Display Dimming Test

This test displays the status of the dimming value sent to the message center indicator module over the SCP network by the steering column/ignition/lighting (SCIL) control module, as well as the internal dimming level set by the message center indicator module.

1. Press the VEHICLE SETTINGS button to increase the vacuum fluorescent display (VFD) dimming level, and the TRIP ODO button to decrease the VFD dimming level.

DIAGNOSIS AND TESTING (Continued)

2. **NOTE:** The SCP value displayed indicates the vehicle dimming setting commanded by the SCIL module.

   NOTE: When the SCP level changes, the message center indicator module will immediately change the VFD dimming level to the one that corresponds to the SCIL module commanded SCP level. Note that the message center indicator module illumination brightness will vary in response to the SCP/VFD brightness level commanded.

   Rotate the instrument panel lamp dimming control wheel.

These tests can be used with the pinpoint tests to verify if the message center indicator module is working properly when NGS Tester is not available to monitor PIDs and send commands.

Message Center (MC) Indicator Module Diagnostic Trouble Code (DTC) Index

Message Center (MC) Indicator Module Diagnostic Trouble Code (DTC) Index

DTC	Description	DTC caused by	Action To Take
B1201	Fuel Sender Circuit Failure	MC	GO to Pinpoint Test Q.
B1204	Fuel Sender Circuit Short to Ground	MC	GO to Pinpoint Test R.
B1205	MC Switch-1 Assembly Circuit Failure	MC	GO to Pinpoint Test S.
B1208	MC Switch-1 Assembly Circuit Short to Ground	MC	GO to Pinpoint Test T.
B1209	MC Switch-2 Assembly Circuit Failure	MC	GO to Pinpoint Test U.
B1212	MC Switch-2 Assembly Circuit Short to Ground	MC	GO to Pinpoint Test V.
B1342	ECU Is Defective	MC	GO to Pinpoint Test W.
B1389	Oil Temperature Sensor Circuit Failure	MC	GO to Pinpoint Test X.
B1390	Oil Temperature Sensor Circuit Short to Ground	MC	GO to Pinpoint Test Y.
B1462	Seat Belt Switch Circuit Failure	DSM	GO to Pinpoint Test Z.
B1676	Battery Voltage Out of Range	MC	GO to Pinpoint Test AA.
U1123	SCP Invalid or Missing Data for Odometer	ABS/TC	PERFORM the ABS/TC Self-Test.
U1136	SCP Invalid or Missing Data for Telltales	PCM	PERFORM the PCM Self-Test.
U1430	SCP Invalid or Missing Data for Function Read Fuel System	PCM	PERFORM the PCM Self-Test.

Message Center (MC) Indicator Module Parameter Identification (PID) Index

Message Center (MC) Indicator Module Parameter Identification (PID) Index

Display	Description	PID Content
CCNT__MC	Number of Continuous DTCS on MCM	One Count Per Bit
EOT__MCM	Engine Oil Temperature	One Count Per Bit (-40 to 214°F)
COOLANT	Engine Coolant Level	OK, not OK

(Continued)

Message Center (MC) Indicator Module Parameter Identification (PID) Index

Display	Description	PID Content
OIL__LVL	Engine Oil Level	OK, not OK
ASDISSW	Air Suspension Inhibit Switch	ON, OFF
FUELLVL	Fuel Level Status	0-100%
AS__TRIM	Air Suspension Warning	ON, OFF

(Continued)

DIAGNOSIS AND TESTING (Continued)

Message Center (MC) Indicator Module Parameter Identification (PID) Index

Display	Description	PID Content
SWFEED1	Switch Feed-1 Status	—, DRIVER SET, VEH SET, SYS CHECK, TIME/DT, COMPASS, OPN/SHVBAT, SHORTGND
SWFEED2	Switch Feed-2 Status	—, RESET, FUEL ECON, FUEL RNG, TRIP/ODO, OPN/SHVBAT, SHORTGND
WFLUID	Washer Fluid Level	LOW, OK

Message Center (MC) Indicator Module Active Command Index

Message Center (MC) Indicator Module Active Command Index

Active Command	Display	Action
MESSAGE CENTER CONTROL	MSGCENTER	ON, OFF
WARNING LAMPS AND CHIME	SBLTLAMP	ON, OFF
BRAKE SYSTEM	T/AOFFLMP	ON, OFF
O/D INDICATOR CONTROL	O/DOFFLMP	ON, OFF

DSM Diagnostic Trouble Code (DTC) Index

DSM Diagnostic Trouble Code (DTC) Index

DTC	Description	DTC Caused By	Action
B1342	ECU Is Defective	DSM	REFER to Section 501-10.
B1462	Drivers Safety Belt Switch Circuit Failure	DSM	REFER to Section 413-09.
B1597	Drivers Seat Seatback Autoglide Forward Switch Circuit Short To Ground	DSM	REFER to Section 501-10.
B1676	Battery Voltage Out Of Range	DSM	REFER to Section 414-00.
B1703	Seat Driver Recline Forward Switch Circuit Short To Battery	DSM	REFER to Section 501-10.
B1707	Seat Driver Recline Rearward Switch Circuit Short To Battery	DSM	REFER to Section 501-10.
B1711	Seat Driver Front Up Switch Circuit Short To Battery	DSM	REFER to Section 501-10.
B1715	Seat Driver Front Down Switch Circuit Short To Battery	DSM	REFER to Section 501-10.
B1719	Seat Driver Forward Switch Circuit Short To Battery	DSM	REFER to Section 501-10.
B1723	Seat Driver Rearward Switch Circuit Short To Battery	DSM	REFER to Section 501-10.
B1727	Seat Driver Rear Up Switch Circuit Short To Battery	DSM	REFER to Section 501-10.
B1731	Seat Driver Rear Down Switch Circuit Short To Battery	DSM	REFER to Section 501-10.

(Continued)

Ford Motor Company Licensed Product

DIAGNOSIS AND TESTING (Continued)

DSM Diagnostic Trouble Code (DTC) Index

DTC	Description	DTC Caused By	Action
B1950	Seat Rear Up/Down Potentiometer Feedback Circuit Failure	DSM	REFER to Section 501-10.
B1954	Seat Front Up/Down Potentiometer Feedback Circuit Failure	DSM	REFER to Section 501-10.
B1958	Seat Recline Forward/Backward Potentiometer Feedback Circuit Failure	DSM	REFER to Section 501-10.
B1962	Seat Horizontal Forward/Backward Potentiometer Feedback Circuit Failure	DSM	REFER to Section 501-10.
B1986	Driver's Seat Seatback Autoglide Rearward Switch Circuit Failure	DSM	REFER to Section 501-10.
B2312	Mirror Passenger Horizontal Feedback Potentiometer Circuit Failure	DSM	REFER to Section 501-09.
B2316	Mirror Passenger Vertical Feedback Potentiometer Circuit Failure	DSM	REFER to Section 501-09.
B2320	Mirror Driver Horizontal Feedback Potentiometer Circuit Failure	DSM	REFER to Section 501-09.
B2324	Mirror Driver Vertical Feedback Potentiometer Circuit Failure	DSM	REFER to Section 501-09.
U1059	SCP Invalid Or Missing Data For Transmission/ Transaxle/PRNDL	PCM	PERFORM the PCM Self-Test.
U1117	SCP Invalid Or Missing Data For Electrical Energy Management	SCIL	PERFORM the SCIL Self-Test.
U1135	SCP Invalid Or Missing Data For Ignition Switch/Starter	SCIL	PERFORM the SCIL Self-Test.
U1180	SCP Invalid Or Missing Data For Personalization (Memory) Features	DDM	PERFORM the DDM Self-Test.
U1181	SCP Invalid Or Missing Data For Personalization (Memory) Features	DDM	PERFORM the DDM Self-Test.
U1194	SCP Invalid Or Missing Data For Mirrors	DDM	PERFORM the DDM Self-Test.
U1199	SCP Invalid Or Missing Data For External Access (Doors)	DDM/SCIL	PERFORM the DDM Self-Test. PERFORM the SCIL Self-Test.

Ford Motor Company Licensed Product

DIAGNOSIS AND TESTING (Continued)

DSM Parameter Identification (PID) Index

DSM Parameter Identification (PID) Index

PID	Description	Expected Values
CCNT__DS	Number Of Continuous DTCS On DSM	one count per bit
D__SBELT	Driver Seat Belt	IN, OUT
PMIR__H	Passengers Mirror Horizontal	SENSED, NOTSEN
PMIR__V	Passengers Mirror Vertical	SENSED, NOTSEN
DMIR__H	Drivers Mirror Horizontal	SENSED, NOTSEN
DMIR__V	Drivers Mirror Vertical	SENSED, NOTSEN
SRCL__MT	Drivers Seat Recline Motor	SENSED, NOTSEN
SFWD__MT	Drivers Seat Forward Motor	SENSED, NOTSEN
SREARMT	Drivers Seat Rear Motor	SENSED, NOTSEN
SFNT__MT	Drivers Seat Front Motor	SENSED, NOTSEN
SRCL__SW	Power Seat Switch - Recline	SHORT, RWD, FWD, OFF
SFWD__SW	Power Seat Switch - Forward/Rearward	SHORT, RWD, FWD, OFF
SREARSW	Power Seat Switch - Rear	SHORT, UP, DOWN, OFF
SFNT__SW	Power Seat Switch - Front	SHORT, UP, DOWN, OFF
AGLIDEF	Autoglide Forward Switch	ACTIVE, notACT
AGLIDER	Autoglide Rearward Signal	ACTIVE, notACT

DSM Active Command Index

Official Licensed Product Ford Motor Company

DSM Active Command Index

Active Command	Display	Action
PID LATCH	PID LATCH	ON, OFF
DRIVER'S SEAT CONTROL	FRONT UP	ON, OFF
	FRONT DWN	ON, OFF
	REAR UP	ON, OFF
	REAR DWN	ON, OFF
	HORZ FWD	ON, OFF
	HORZ BWD	ON, OFF
	RECL FWD	ON, OFF

(Continued)

DSM Active Command Index

Active Command	Display	Action
	RECL BWD	ON, OFF
POWER MIRROR CONTROL	DR UP	ON, OFF
	DR DOWN	ON, OFF
	DR LEFT	ON, OFF
	DR RIGHT	ON, OFF
	PR UP	ON, OFF
	PR DOWN	ON, OFF
	PR LEFT	ON, OFF
	PR RIGHT	ON, OFF

DIAGNOSIS AND TESTING (Continued)

Symptom Chart

Symptom Chart

Condition	Possible Source	Action
• No Communication With the Message Center Indicator Module	• Message center indicator module. • Circuitry.	• GO to Pinpoint Test B.
• The Message Center Is Not Operating Properly	• Circuitry. • Message center indicator module.	• PERFORM the Message Center Indicator Module On-Board Diagnostic Test.
• The Message Center Switch Is Not Operating Properly	• Circuitry. • Message center switch module. • Message center indicator module.	• GO to Pinpoint Test C.
• Clock Display Malfunction	• Circuitry. • Message center indicator module.	• GO to Pinpoint Test D.
• The Fuel Computer Range Is Inoperative	• Circuitry. • Fuel pump module. • Message center indicator module. • Powertrain control module (PCM). • Anti-lock brake system (ABS) control module.	• GO to Pinpoint Test E.
• The Fuel Computer Status Is Inoperative	• Circuitry. • Fuel pump module. • Message center indicator module.	• GO to Pinpoint Test F.
• The Fuel Computer Economy Is Incorrect	• Circuitry. • ABS control module. • Message center indicator module. • PCM.	• GO to Pinpoint Test G.
• The Air Suspension Switch Warning Is Incorrect	• Circuitry. • Air suspension switch. • Message center indicator module. • Steering and suspension control module.	• GO to Pinpoint Test H.
• The Air Suspension System Warning Is Incorrect	• Circuitry. • Air suspension switch. • Message center indicator module. • Steering and suspension control module.	• GO to Pinpoint Test J.
• The Charging System Warning Is Incorrect	• Circuitry. • Message center indicator module.	• REFER to Section 413-01.
• The Door Ajar Warning Is Not Operating Properly	• Circuitry. • Courtesy lamp switch. • Message center indicator module.	• REFER to Section 417-02.

Official Licensed Product Ford Motor Company

DIAGNOSIS AND TESTING (Continued)

Symptom Chart (Continued)

Condition	Possible Source	Action
• The Engine Coolant Temperature Warning Is Not Operating Properly	• Circuitry. • Water temperature indicator sender unit. • Message center indicator module. • Hybrid electronic instrument cluster (HEC). • PCM.	• REFER to Section 413-01.
• The Engine Coolant Level Warning Is Not Operating Properly	• Circuitry. • Low engine coolant level sensor. • Message center indicator module.	• GO to Pinpoint Test K.
• The Oil Level Warning Is Not Operating Properly	• Circuitry. • Oil level sensor. • Message center indicator module.	• GO to Pinpoint Test L.
• The Luggage Compartment Door Ajar Warning Is Not Operating Properly	• Circuitry. • Luggage compartment lamp switch. • Message center indicator module.	• REFER to Section 417-02.
• The Washer Fluid Level Warning Is Not Operating Properly	• Circuitry. • Windshield washer reservoir fluid level switch. • Message center indicator module.	• GO to Pinpoint Test M.
• The Traction Control Disable Warning Is Never/Always On	• Circuitry. • Bulb. • Message center indicator module. • ABS control module.	• GO to Pinpoint Test N.
• No Communication With the Driver Seat Module	• Circuitry. • Driver seat module (DSM). • Communication network.	• GO to Pinpoint Test A.
• The Indicator Is Always/Never On — Safety Belt Warning	• Circuitry. • Bulb. • Message center indicator.	• GO to Pinpoint Test P.
• The O/D OFF Warning Indicator Is Always/Never On	• Circuit. • Warning indicator lamp. • Transmission control switch.	• REFER to Section 307-05.
• The Air Bag Warning Indicator Is Always/Never On	• Circuitry. • Sensor. • Bulb. • Air bag diagnostic monitor.	• REFER to Section 501-20B.
• The Malfunction Indicator Lamp Is Never/Always On	• Emission system concern. • Bulb. • PCM.	• REFER to Powertrain Control/Emissions Diagnosis Manual [1].
• The Anti-Theft Warning Indicator Is Never/Always On	• Circuitry. • Bulb. • Steering column/ignition lighting (SCIL) control module.	• REFER to Section 419-01A.

1 Can be purchased as a separate item.

DIAGNOSIS AND TESTING (Continued)

Pinpoint Tests

PINPOINT TEST A: NO COMMUNICATION WITH THE DRIVER SEAT MODULE

TEST CONDITIONS	TEST DETAILS/RESULTS/ACTIONS
A1 CHECK THE POWER SUPPLY TO DRIVER SEAT MODULE (DSM)	
1 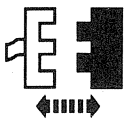 DSM C362 2 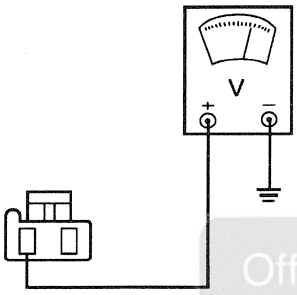 AN0425-A	2 Connect a voltmeter between driver seat module (DSM) C362-1, circuit 490 (R), and ground. • Is the voltage reading B+? → **Yes** GO to **A7**. → **No** GO to **A2**.
A2 CHECK THE POWER DISTRIBUTION BOX FUSE 19 (30A)	
1 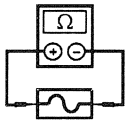 Power Distribution Box Fuse 19 (30A)	• Is the fuse OK? → **Yes** REPAIR circuit 490 (R). RETEST the system. → **No** GO to **A3**.

Official Licensed Product

(Continued)

DIAGNOSIS AND TESTING (Continued)

PINPOINT TEST A: NO COMMUNICATION WITH THE DRIVER SEAT MODULE (Continued)

TEST CONDITIONS	TEST DETAILS/RESULTS/ACTIONS
A3 CHECK FOR A SYSTEM SHORT TO GROUND	
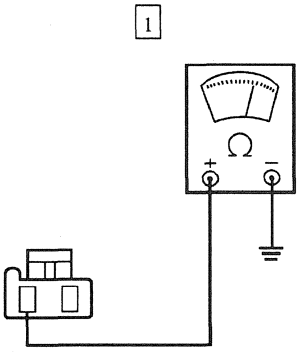 AN0421-A	1 Connect an ohmmeter between DSM C362-1, circuit 490 (R), and ground. • Is the resistance 10 kohms or less? → **Yes** GO to **A4**. → **No** GO to **A5**.
A4 CHECK CIRCUIT 490 (R) FOR A SHORT TO GROUND	
1 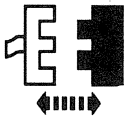 Driver Power Lumbar Switch C345 2 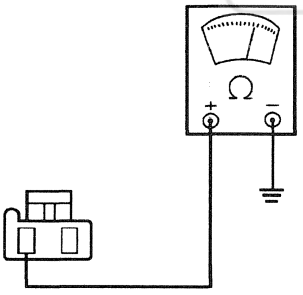 AN0421-A	2 Connect an ohmmeter between DSM C362-1, circuit 490 (R), and ground. • Is the resistance 10 kohms or less? → **Yes** REPAIR circuit 490 (R). RETEST the system. → **No** REPLACE the driver power lumbar switch. RETEST the system.

Official Licensed Product
Ford Motor Company

(Continued)

DIAGNOSIS AND TESTING (Continued)

PINPOINT TEST A: NO COMMUNICATION WITH THE DRIVER SEAT MODULE (Continued)

TEST CONDITIONS	TEST DETAILS/RESULTS/ACTIONS
A5 CHECK CIRCUIT 899 (R/W) FOR A SHORT TO GROUND	
1 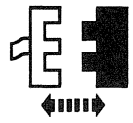 Driver Power Lumbar Switch C345 2 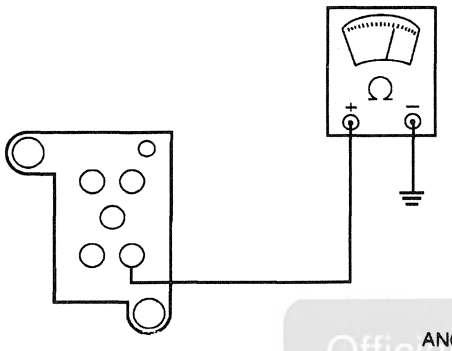 AN0422-B	2 Connect an ohmmeter between the driver power lumbar switch C345-5, circuit 899 (R/W), and ground. • Is the resistance 10 kohms or less? → **Yes** REPAIR circuit 899 (R/W). RETEST the system. → **No** GO to **A6**.
A6 CHECK CIRCUIT 116 (R/BK) FOR A SHORT TO GROUND	
1 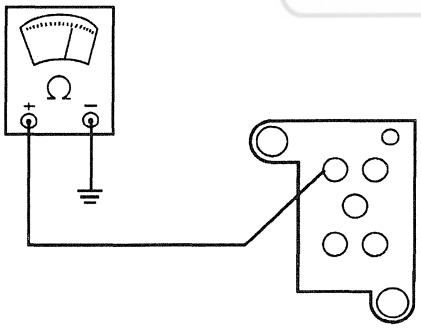 AN0423-B	1 Connect an ohmmeter between the driver power lumbar switch C345-1, circuit 116 (R/BK), and ground. • Is the resistance 10 kohms or less? → **Yes** REPAIR circuit 116 (R/BK). RETEST the system. → **No** REPLACE the DSM. RETEST the system.

Official Licensed Product
Ford Motor Company

(Continued)

DIAGNOSIS AND TESTING (Continued)

PINPOINT TEST A: NO COMMUNICATION WITH THE DRIVER SEAT MODULE (Continued)

TEST CONDITIONS	TEST DETAILS/RESULTS/ACTIONS
A7 CHECK CIRCUIT 1048 (LB/W) FOR B+	
1 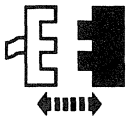 Driver Seat Module C311 2 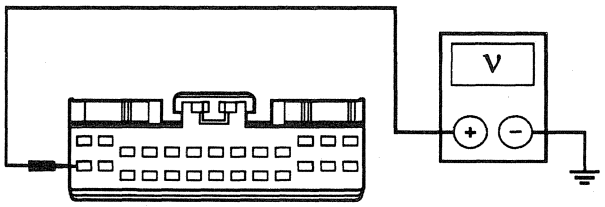 GK6924-A	2 Connect a voltmeter to DSM C311-14, circuit 1048 (LB/W). • Is the voltage reading B+? → **Yes** GO to **A10**. → **No** GO to **A8**.
A8 CHECK THE FUSE JUNCTION PANEL FUSE 35 (10A)	
1 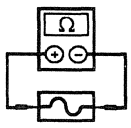 Fuse Junction Panel Fuse 35 (10A)	• Is the fuse OK? → **Yes** REPAIR circuit 1048 (LB/W). RETEST the system. → **No** GO to **A9**.

Officially Licensed Product
Ford Motor Company

(Continued)

DIAGNOSIS AND TESTING (Continued)

PINPOINT TEST A: NO COMMUNICATION WITH THE DRIVER SEAT MODULE (Continued)

TEST CONDITIONS	TEST DETAILS/RESULTS/ACTIONS
A9 CHECK CIRCUIT 1048 (LB/W) FOR A SHORT TO GROUND	
1 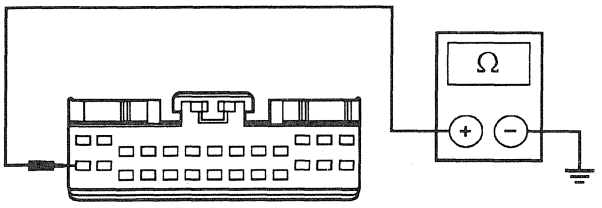 GK6925-A	1 Connect an ohmmeter between DSM C311-14, circuit 1048 (LB/W), and ground. • Is the resistance 10 kohms or less? → **Yes** REPAIR circuit 1048 (LB/W). RETEST the system. → **No** REPLACE the DSM. RETEST the system.
A10 CHECK CIRCUIT 57 (BK) FOR AN OPEN	
1 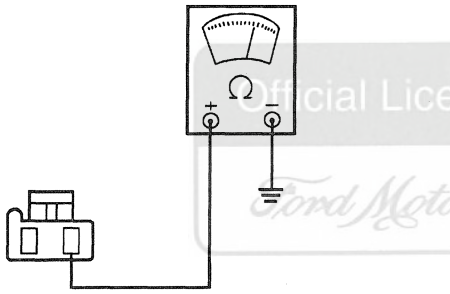 AN0430-A	1 Connect an ohmmeter between DSM C362-2, circuit 57 (BK), and ground. • Is the resistance 5 ohms or less? → **Yes** GO to **A11**. → **No** REPAIR circuit 57 (BK). RETEST the system.
A11 CHECK CIRCUIT 875 (BK/LB) FOR AN OPEN	
1 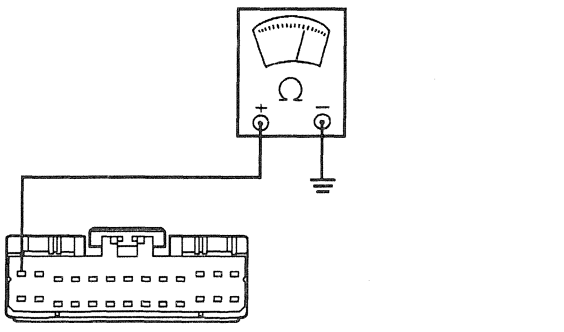 AN0431-B	1 Connect an ohmmeter between DSM C311-1, circuit 875 (BK/LB), and ground. • Is the resistance 5 ohms or less? → **Yes** REFER to Section 418-00. → **No** REPAIR circuit 875 (BK/LB). RETEST the system.

Official Licensed Product
Ford Motor Company

DIAGNOSIS AND TESTING (Continued)

PINPOINT TEST B: NO COMMUNICATION WITH THE MODULE — MESSAGE CENTER INDICATOR

TEST CONDITIONS	TEST DETAILS/RESULTS/ACTIONS
B1 CHECK CIRCUIT 973 (R) FOR B+	
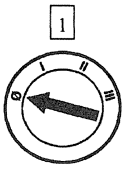 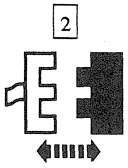 Message Center Indicator Module C208 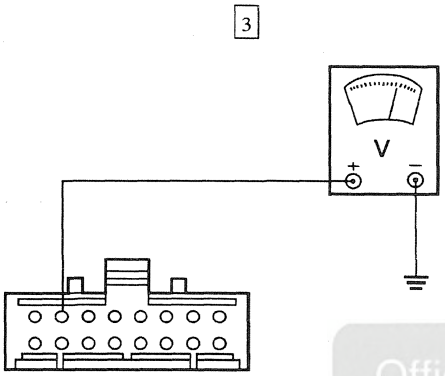 AK1000-A	3 Connect a voltmeter between the message center indicator module C208-27, circuit 973 (R), and ground. • Is the voltage reading B+? → **Yes** GO to **B6**. → **No** GO to **B2**.
B2 CHECK FUSE JUNCTION PANEL FUSE 20 (10A)	
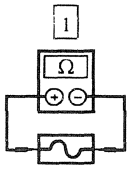 Fuse Junction Panel Fuse 20 (10A)	• Is the fuse OK? → **Yes** REPAIR circuit 973 (R). CYCLE the ignition switch. RETRIEVE message center indicator module continuous DTCs and PERFORM the Message Center Indicator Module On-Board Diagnostic Test. If no DTCs are retrieved, CHECK the system for proper operation. → **No** GO to **B3**.

Official Licensed Product
Ford Motor Company

(Continued)

DIAGNOSIS AND TESTING (Continued)

PINPOINT TEST B: NO COMMUNICATION WITH THE MODULE — MESSAGE CENTER INDICATOR (Continued)

TEST CONDITIONS	TEST DETAILS/RESULTS/ACTIONS
B3 CHECK FOR A SYSTEM SHORT	
1 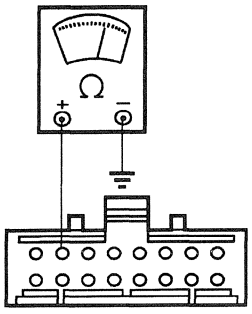 AK1066-A	1 Connect an ohmmeter between message center indicator module C208-27, circuit 973 (R), and ground. • Is the resistance 5 ohms or less? → **Yes** GO to **B4**. → **No** REPLACE fuse junction panel fuse 20 (10A). RETEST the system for normal operation. If fuse junction panel fuse 20 (10A) opens again, REPLACE the message center indicator module. CYCLE the ignition switch. RETRIEVE message center indicator module continuous DTCs and PERFORM the Message Center Indicator Module On-Board Diagnostic Test. If no DTCs are retrieved, CHECK the system for proper operation.
B4 CHECK THE HYBRID ELECTRONIC INSTRUMENT CLUSTER (HEC) FOR A SHORT	
1 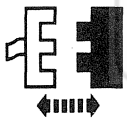 HEC C294 2 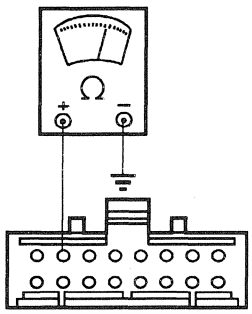 AK1066-A	2 Connect an ohmmeter between message center indicator module C208-27, circuit 973 (R), and ground. • Is the resistance 5 ohms or less? → **Yes** GO to **B5**. → **No** REPLACE the HEC. REFER to Section 413-01. CYCLE the ignition switch. RETRIEVE message center indicator module continuous DTCs and PERFORM the Message Center Indicator Module On-Board Diagnostic Test. If no DTCs are retrieved, CHECK the system for proper operation.

(Continued)

Official Licensed Product Ford Motor Company

DIAGNOSIS AND TESTING (Continued)

PINPOINT TEST B: NO COMMUNICATION WITH THE MODULE — MESSAGE CENTER INDICATOR (Continued)

TEST CONDITIONS	TEST DETAILS/RESULTS/ACTIONS
B5 CHECK THE ELECTRONIC AUTOMATIC TEMPERATURE CONTROL (EATC) MODULE FOR A SHORT	
1 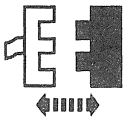 EATC Module C272 2 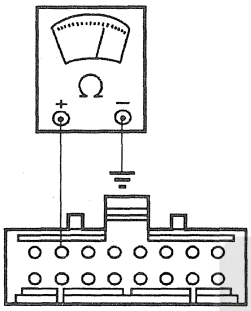 AK1066-A	2 Connect an ohmmeter between message center indicator module C208-27, circuit 973 (R), and ground. • Is the resistance 10 kohms or less? → **Yes** REPAIR circuit 973 (R). GO to **B6**. → **No** REPLACE the EATC module. REFER to Section 412-04. CYCLE the ignition switch. RETRIEVE message center indicator module continuous DTCs and PERFORM the Message Center Indicator Module On-Board Diagnostic Test. If no DTCs are retrieved, CHECK the system for proper operation.
B6 CHECK CIRCUIT 1002 (BK/PK) FOR B+	
1 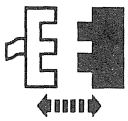 Message Center Indicator Module C246 2 3 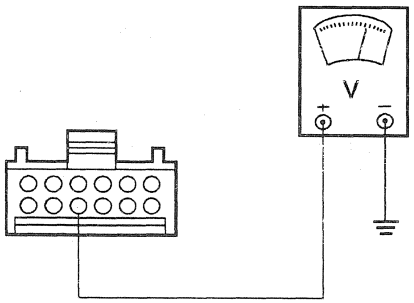 AK0997-B	3 Connect a voltmeter between message center indicator module C246-10, circuit 1002 (BK/PK), and ground. • Is the voltage B+? → **Yes** GO to **B14**. → **No** GO to **B7**.

(Continued)

DIAGNOSIS AND TESTING (Continued)

PINPOINT TEST B: NO COMMUNICATION WITH THE MODULE — MESSAGE CENTER INDICATOR (Continued)

TEST CONDITIONS	TEST DETAILS/RESULTS/ACTIONS
B7 CHECK FUSE JUNCTION PANEL FUSE 4 (10A)	
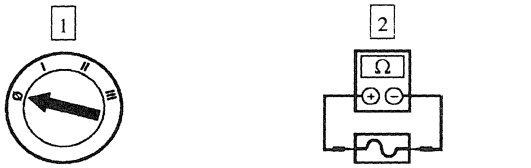 Fuse Junction Panel Fuse 4 (10A)	• Is the fuse OK? → **Yes** REPAIR circuit 1002 (BK/PK) for an open. CYCLE the ignition switch. RETRIEVE message center indicator module continuous DTCs and PERFORM the Message Center Indicator Module On-Board Diagnostic Test. If no DTCs are retrieved, CHECK the system for proper operation. → **No** GO to **B8**.
B8 CHECK CIRCUIT 1002 (BK/PK) FOR A SHORT TO GROUND	
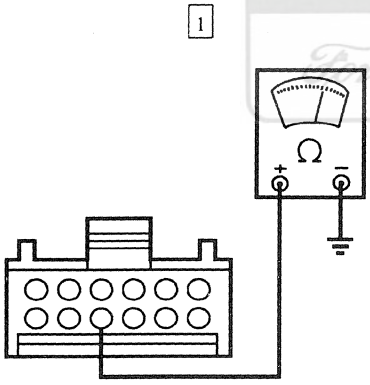 AK1061-A	1 Connect an ohmmeter between the message center indicator module C246-10, circuit 1002 (BK/PK), and ground. • Is the resistance 100 ohms or less? → **Yes** GO to **B9**. → **No** REPLACE fuse junction panel fuse 4 (10A). RETEST the system for normal operation. If the fuse fails again, REPLACE the message center indicator module. CYCLE the ignition switch. RETRIEVE message center indicator module continuous DTCs and PERFORM the Message Center Indicator Module On-Board Diagnostic Test. If no DTCs are retrieved, CHECK the system for proper operation.

(Continued)

DIAGNOSIS AND TESTING (Continued)

PINPOINT TEST B: NO COMMUNICATION WITH THE MODULE — MESSAGE CENTER INDICATOR (Continued)

TEST CONDITIONS	TEST DETAILS/RESULTS/ACTIONS
B9 CHECK THE COMPASS MODULE FOR A SHORT	
1 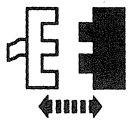 Compass Module C912 2 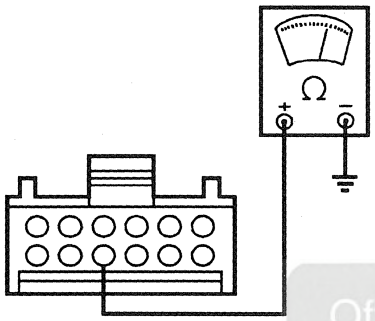 AK1061-A	2 Connect an ohmmeter between message center indicator module C246-10, circuit 1002 (BK/PK), and ground. • Is the resistance 100 ohms or less? → **Yes** GO to **B10**. → **No** REPLACE the compass module. REFER to Section 419-11. CYCLE the ignition switch. RETRIEVE message center indicator module continuous DTCs and PERFORM the Message Center Indicator Module On-Board Diagnostic Test. If no DTCs are retrieved, CHECK the system for proper operation.

Official Licensed Product
Ford Motor Company

(Continued)

DIAGNOSIS AND TESTING (Continued)

PINPOINT TEST B: NO COMMUNICATION WITH THE MODULE — MESSAGE CENTER INDICATOR (Continued)

TEST CONDITIONS	TEST DETAILS/RESULTS/ACTIONS
B10 CHECK THE RADIO FOR A SHORT	
1 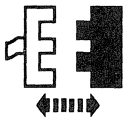 Radio C257 2 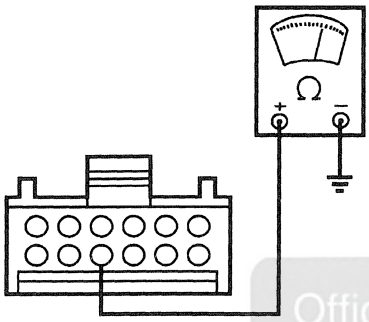 AK1061-A	2 Connect an ohmmeter between message center indicator module C246-10, circuit 1002 (BK/PK), and ground. • Is the resistance 100 ohms or less? → **Yes** GO to **B11**. → **No** REMOVE the radio chassis and SEND it to an authorized Ford Audio System repair facility. REFER to Section 415-01. CYCLE the ignition switch. RETRIEVE message center indicator module continuous DTCs and PERFORM the Message Center Indicator Module On-Board Diagnostic Test. If no DTCs are retrieved, CHECK the system after repair for proper operation.

Official Licensed Product
Ford Motor Company

(Continued)

DIAGNOSIS AND TESTING (Continued)

PINPOINT TEST B: NO COMMUNICATION WITH THE MODULE — MESSAGE CENTER INDICATOR (Continued)

TEST CONDITIONS	TEST DETAILS/RESULTS/ACTIONS
B11 CHECK THE PASSENGER SEAT MODULE (PSM) FOR A SHORT	
1 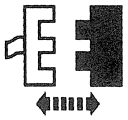 PSM C320 2 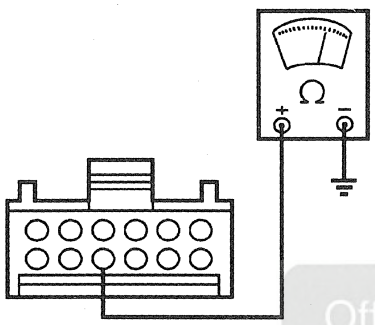 AK1061-A	2 Connect an ohmmeter between message center indicator module C246-10, circuit 1002 (BK/PK), and ground. • Is the resistance 100 ohms or less? → **Yes** GO to **B12**. → **No** REPLACE the PSM. REFER to Section 501-10. CYCLE the ignition switch. RETRIEVE message center indicator module continuous DTCs and PERFORM the Message Center Indicator Module On-Board Diagnostic Test. If no DTCs are retrieved, CHECK the system for proper operation.

(Continued)

Official Licensed Reproduction
Ford Motor Company

DIAGNOSIS AND TESTING (Continued)

PINPOINT TEST B: NO COMMUNICATION WITH THE MODULE — MESSAGE CENTER INDICATOR (Continued)

TEST CONDITIONS	TEST DETAILS/RESULTS/ACTIONS
B12 CHECK THE INSIDE REAR VIEW MIRROR FOR A SHORT	
1 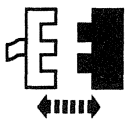 Inside Rear View Mirror C901	
2 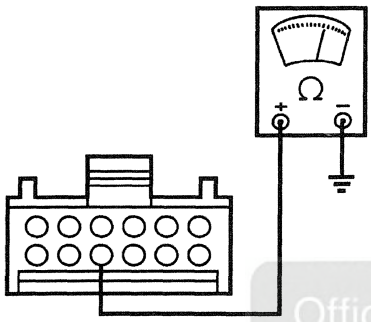 AK1061-A	2 Connect an ohmmeter between message center indicator module C246-10, circuit 1002 (BK/PK), and ground. • Is the resistance 100 ohms or less? → **Yes** If equipped with a cellular phone, GO to **B13**. Otherwise REPAIR circuit 1002 (BK/PK). CYCLE the ignition switch. RETRIEVE message center indicator module continuous DTCs and PERFORM the Message Center Indicator Module On-Board Diagnostic Test. If no DTCs are retrieved, CHECK the system for proper operation. → **No** REPLACE the inside rear view mirror. REFER to Section 501-09. CYCLE the ignition switch. RETRIEVE message center indicator module continuous DTCs and PERFORM the Message Center Indicator Module On-Board Diagnostic Test. If no DTCs are retrieved, CHECK the system for proper operation.

(Continued)

Official Licensed Product
Ford Motor Company

DIAGNOSIS AND TESTING (Continued)

PINPOINT TEST B: NO COMMUNICATION WITH THE MODULE — MESSAGE CENTER INDICATOR (Continued)

TEST CONDITIONS	TEST DETAILS/RESULTS/ACTIONS
B13 CHECK THE CELLULAR PHONE MODULE FOR A SHORT	
1 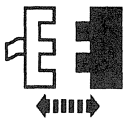 PSE Module C413 2 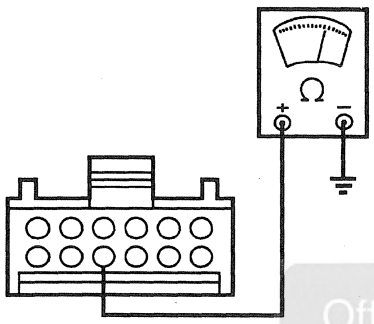 AK1061-A	2 Connect an ohmmeter between message center indicator module C246-10, circuit 1002 (BK/PK), and ground. • Is the resistance 10 kohms or less? → **Yes** REPAIR circuit 1002 (BK/PK). CYCLE the ignition switch. RETRIEVE message center indicator module continuous DTCs and PERFORM the Message Center Indicator Module On-Board Diagnostic Test. If no DTCs are retrieved, CHECK the system for proper operation. → **No** REPLACE the portable support electronics (PSE) module. REFER to Section 419-08. CYCLE the ignition switch. RETRIEVE message center indicator module continuous DTCs and PERFORM the Message Center Indicator Module On-Board Diagnostic Test. If no DTCs are retrieved, CHECK the system for proper operation.
B14 CHECK CIRCUIT 875 (BK/LB) FOR AN OPEN	
1 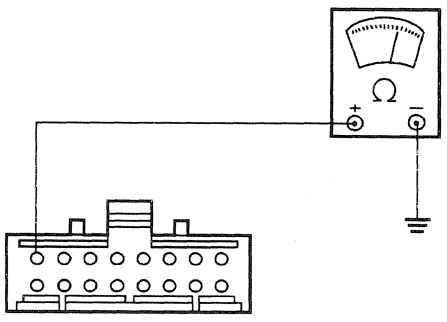 AK0999-A	1 Connect an ohmmeter between message center indicator module C208-28, circuit 875 (BK/LB), and ground. • Is the resistance 5 ohms or less? → **Yes** GO to **B15**. → **No** REPAIR circuit 875 (BK/LB). CYCLE the ignition switch. RETRIEVE message center indicator module continuous DTCs and PERFORM the Message Center Indicator Module On-Board Diagnostic Test. If no DTCs are retrieved, CHECK the system for proper operation.

(Continued)

Official Licensed Product
Ford Motor Company

DIAGNOSIS AND TESTING (Continued)

PINPOINT TEST B: NO COMMUNICATION WITH THE MODULE — MESSAGE CENTER INDICATOR (Continued)

TEST CONDITIONS	TEST DETAILS/RESULTS/ACTIONS
B15 CHECK CIRCUIT 57 (BK) FOR AN OPEN	
1 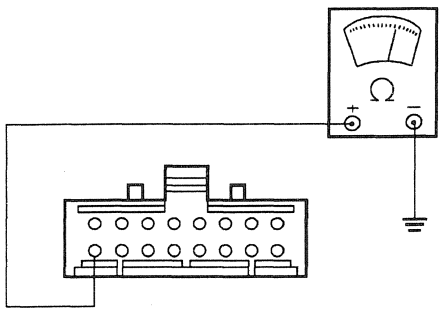 AK0998-A	1 Connect an ohmmeter between message center indicator module C208-36, circuit 57 (BK), and ground. • Is the resistance 5 ohms or less? → **Yes** REFER to Section 418-00. → **No** REPAIR circuit 57 (BK). CYCLE the ignition switch. RETRIEVE message center indicator module continuous DTCs and PERFORM the Message Center Indicator Module On-Board Diagnostic Test. If no DTCs are retrieved, CHECK the system for proper operation.

Official Licensed Product
Ford Motor Company

DIAGNOSIS AND TESTING (Continued)

PINPOINT TEST C: THE MESSAGE CENTER SWITCH IS NOT OPERATING PROPERLY

TEST CONDITIONS	TEST DETAILS/RESULTS/ACTIONS
C1 CHECK PIDS SWFEED1 AND SWFEED2	
1 2 Message Center Indicator Module PID SWFEED1 3 Message Center Indicator Module PID SWFEED2	4 Press each listed message center switch while observing the associated PID for the proper readout. • SWFEED1. — Driver Setting - DRIVER SET. — Vehicle Setting - VEH SET. — System Check - SYS CHECK. — Time/Date - TIME/DT. — Compass - COMPASS. • SWFEED2. — Reset - RESET. — Fuel Economy - FUEL ECON. — Fuel Range - FUEL RNG. — Trip Odometer - TRIP/ODO. • Do PIDs SWFEED1 and SWFEED2 read the correct setting as each button is pressed? → **Yes** GO to **C2**. → **No** REPLACE the message center switch module. CYCLE the ignition switch. RETRIEVE message center indicator module continuous DTCs and PERFORM the Message Center Indicator Module On-Board Diagnostic Test. If no DTCs are retrieved, CHECK the system for proper operation.
C2 CHECK THE ILLUMINATION INPUT	
1 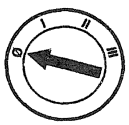 2 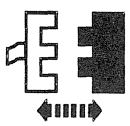 Message Center Switch Module C202	3 Turn the headlamp switch to the PARK position.

(Continued)

Official Licensed Product
Ford Motor Company

DIAGNOSIS AND TESTING (Continued)

PINPOINT TEST C: THE MESSAGE CENTER SWITCH IS NOT OPERATING PROPERLY (Continued)

TEST CONDITIONS	TEST DETAILS/RESULTS/ACTIONS
C2 CHECK THE ILLUMINATION INPUT (Continued)	
4 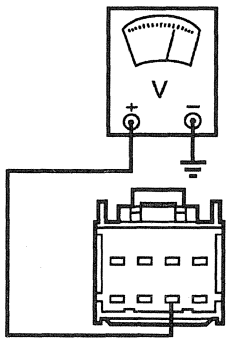 AK1205-A	4 Connect a voltmeter to message center switch module C202-7, circuit 235 (R/BK). • Is voltage reading between 2.5 - 12 volts? → **Yes** GO to **C3**. → **No** REPAIR circuit 235 (R/BK). CYCLE the ignition switch. RETRIEVE message center indicator module continuous DTCs and PERFORM the Message Center Indicator Module On-Board Diagnostic Test. If no DTCs are retrieved, CHECK the system for proper operation.
C3 CHECK CIRCUIT 57 (BK) FOR AN OPEN	
1 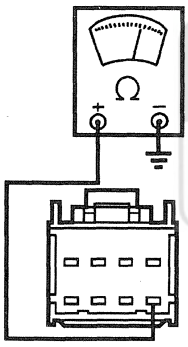 AK1206-A	1 Connect an ohmmeter between message center switch module C202-8, circuit 57 (BK), and ground. • Is the resistance 5 ohms or less? → **Yes** REPLACE the message center switch module. REFER to Message Center Switch Module. CYCLE the ignition switch. RETRIEVE message center indicator module continuous DTCs and PERFORM the Message Center Indicator Module On-Board Diagnostic Test. If no DTCs are retrieved, CHECK the system for proper operation. → **No** REPAIR circuit 57 (BK). CYCLE the ignition switch. RETRIEVE message center indicator module continuous DTCs and PERFORM the Message Center Indicator Module On-Board Diagnostic Test. If no DTCs are retrieved, CHECK the system for proper operation.

Official Licensed Product
Ford Motor Company

DIAGNOSIS AND TESTING (Continued)

PINPOINT TEST D: CLOCK DISPLAY MALFUNCTION

TEST CONDITIONS	TEST DETAILS/RESULTS/ACTIONS
D1 CHECK CIRCUIT 973 (R) FOR B+	
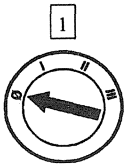 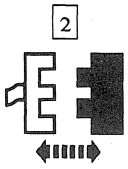 Message Center Indicator Module C208 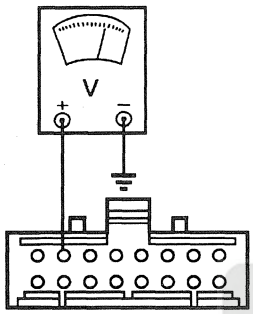 AK1422-A	3 Connect a voltmeter between message center indicator module C208-27, circuit 973 (R), and ground. • Is the voltage reading B+? → **Yes** GO to **D6.** → **No** GO to **D2.**
D2 CHECK FUSE JUNCTION PANEL FUSE 20 (10A)	
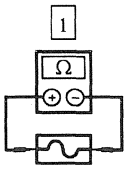 Fuse Junction Panel Fuse 20 (10A)	• Is the fuse OK? → **Yes** REPAIR circuit 973 (R). CYCLE the ignition switch. RETRIEVE message center indicator module continuous DTCs and PERFORM the Message Center Indicator Module On-Board Diagnostic Test. If no DTCs are retrieved, CHECK the system for proper operation. → **No** GO to **D3.**

Official Licensed Product
Ford Motor Company

(Continued)

DIAGNOSIS AND TESTING (Continued)

PINPOINT TEST D: CLOCK DISPLAY MALFUNCTION (Continued)

TEST CONDITIONS	TEST DETAILS/RESULTS/ACTIONS
D3 CHECK FOR A SYSTEM SHORT	
1 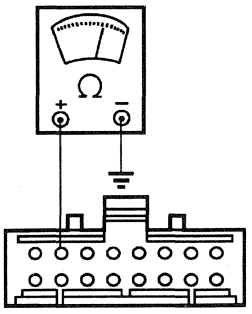 AK1066-A	1 Connect an ohmmeter between message center indicator module C208-27, circuit 973 (R), and ground. • Is the resistance 5 ohms or less? → **Yes** GO to **D4**. → **No** REPLACE fuse junction panel fuse 20 (10A). RETEST the system for normal operation. If fuse junction panel fuse 20 (10A) opens again, REPLACE the message center indicator module. CYCLE the ignition switch. RETRIEVE message center indicator module continuous DTCs and PERFORM the Message Center Indicator Module On-Board Diagnostic Test. If no DTCs are retrieved, CHECK the system for proper operation.
D4 CHECK THE HYBRID ELECTRONIC INSTRUMENT CLUSTER (HEC) FOR A SHORT	
1 HEC C294 2 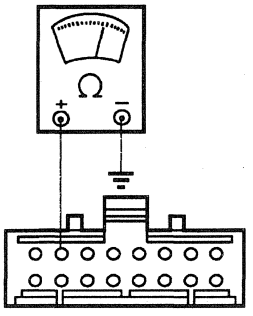 AK1066-A	2 Connect an ohmmeter between the message center indicator module C208-27, circuit 973 (R), and ground. • Is the resistance 5 ohms or less? → **Yes** GO to **D5**. → **No** REPLACE the HEC. REFER to Section 413-01. CYCLE the ignition switch. RETRIEVE message center indicator module continuous DTCs and PERFORM the Message Center Indicator Module On-Board Diagnostic Test. If no DTCs are retrieved, CHECK the system for proper operation.

Official Licensed Product
Ford Motor Company

(Continued)

DIAGNOSIS AND TESTING (Continued)

PINPOINT TEST D: CLOCK DISPLAY MALFUNCTION (Continued)

TEST CONDITIONS	TEST DETAILS/RESULTS/ACTIONS
D5 CHECK THE ELECTRONIC AUTOMATIC TEMPERATURE CONTROL (EATC) MODULE FOR A SHORT	
1 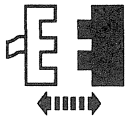 EATC Module C272 2 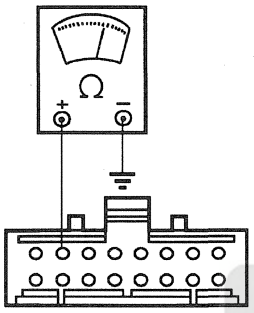 AK1066-A	2 Connect an ohmmeter between message center indicator module C208-27, circuit 973 (R), and ground. • Is the resistance 5 ohms or less? → **Yes** REPAIR circuit 973 (R). GO to **D6.** → **No** REPLACE the EATC module. REFER to Section 412-04. CYCLE the ignition switch. RETRIEVE message center indicator module continuous DTCs and PERFORM the Message Center Indicator Module On-Board Diagnostic Test. If no DTCs are retrieved, CHECK the system for proper operation.
D6 CHECK THE GROUNDS	
1 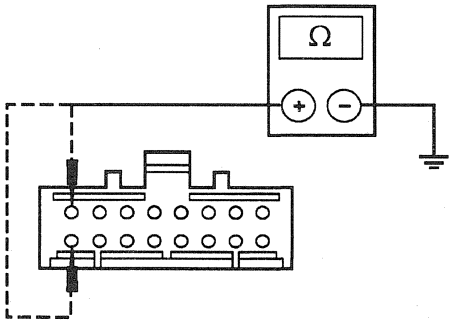 GK5335-A	1 Connect an ohmmeter between message center indicator module C208-36, circuit 57 (BK), and ground; and between message center indicator module C208-28, circuit 875 (BK/LB), and ground. • Is the resistance 5 ohms or less in both circuits? → **Yes** REPLACE the message center indicator module. CYCLE the ignition switch. RETRIEVE message center indicator module continuous DTCs and PERFORM the Message Center Indicator Module On-Board Diagnostic Test. If no DTCs are retrieved, CHECK the system for proper operation. → **No** REPAIR the suspect circuit for an open. CYCLE the ignition switch. RETRIEVE message center indicator module continuous DTCs and PERFORM the Message Center Indicator Module On-Board Diagnostic Test. If no DTCs are retrieved, CHECK the system for proper operation.

Official Licensed Ford Motor Company®

DIAGNOSIS AND TESTING (Continued)

PINPOINT TEST E: THE FUEL COMPUTER RANGE IS INOPERATIVE

TEST CONDITIONS	TEST DETAILS/RESULTS/ACTIONS
E1 VERIFY FUEL GAUGE OPERATION	
	1 Check the fuel gauge operation. • Does the fuel gauge operate properly? → **Yes** GO to **E2**. → **No** REFER to Section 413-01.
E2 CHECK FOR MESSAGE CENTER INDICATOR MODULE DTCS	
1 2 RETRIEVE DTCs	• Is DTC B1201, B1204, U1430 or U1123 retrieved? → **Yes** REFER to the Message Center (MC) Indicator Module Diagnostic Trouble Code (DTC) Index to REPAIR DTCs. → **No** GO to **E3**.

Official Licensed Product
Ford Motor Company

(Continued)

DIAGNOSIS AND TESTING (Continued)

PINPOINT TEST E: THE FUEL COMPUTER RANGE IS INOPERATIVE (Continued)

TEST CONDITIONS	TEST DETAILS/RESULTS/ACTIONS
E3 CHECK THE GROUNDS	
1 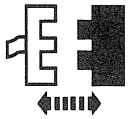 Message Center Indicator Module C208 2 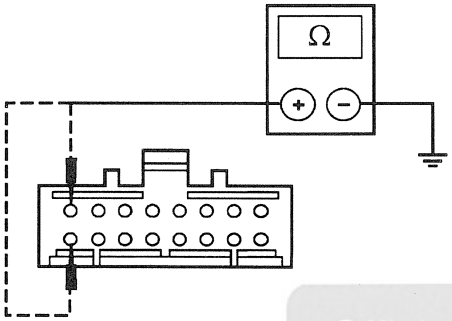 GK5335-A	2 Connect an ohmmeter between message center indicator module C208-36, circuit 57 (BK), and ground; then between message center indicator module C208-28, circuit 875 (BK/LB), and ground. • Is the resistance 5 ohms or less in both circuits? → **Yes** GO to **E4**. → **No** REPAIR the suspect circuit. CYCLE the ignition switch. RETRIEVE message center indicator module continuous DTCs and PERFORM the Message Center Indicator Module On-Board Diagnostic Test. If no DTCs are retrieved, CHECK the system for proper operation.

Officially Licensed Ford Motor Company

(Continued)

DIAGNOSIS AND TESTING (Continued)

PINPOINT TEST E: THE FUEL COMPUTER RANGE IS INOPERATIVE (Continued)

TEST CONDITIONS	TEST DETAILS/RESULTS/ACTIONS
E4 CHECK THE FUEL PUMP MODULE	
1 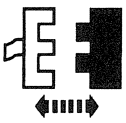 Message Center Indicator Module C246 2 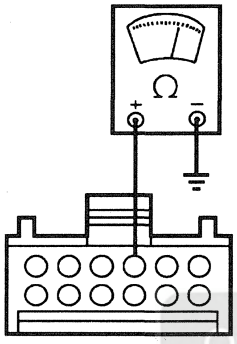 AK1068-A	2 Connect an ohmmeter between message center indicator module C246-3, circuit 29 (Y/W), and ground. • Is the resistance between 15 - 160 ohms? → **Yes** GO to **E5**. → **No** REPLACE the fuel pump module. REFER to Section 310-01. CYCLE the ignition switch. RETRIEVE message center indicator module continuous DTCs and PERFORM the Message Center Indicator Module On-Board Diagnostic Test. If no DTCs are retrieved, CHECK the system for proper operation.
E5 CHECK THE FLOAT TRAVEL	
2 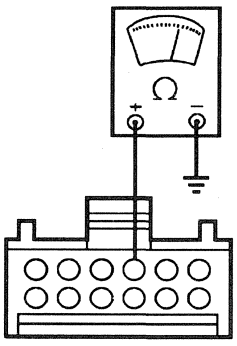 AK1068-A	1 Fill the fuel tank to the FULL level. 2 Connect an ohmmeter between message center indicator module C246-3, circuit 29 (Y/W), and ground. • Is the resistance approximately 160 ohms? → **Yes** GO to **E6**. → **No** CHECK the fuel pump module for interference; REFER to Section 310-01. REPLACE the fuel pump module if no interference is found. CYCLE the ignition switch. RETRIEVE message center indicator module continuous DTCs and PERFORM the Message Center Indicator Module On-Board Diagnostic Test. If no DTCs are retrieved, CHECK the system for proper operation.
E6 CHECK THE FUEL PUMP MODULE LOW END RESISTANCE	
	1 Drain the fuel tank.

(Continued)

Official Licensed Product Ford Motor Company

DIAGNOSIS AND TESTING (Continued)

PINPOINT TEST E: THE FUEL COMPUTER RANGE IS INOPERATIVE (Continued)

TEST CONDITIONS	TEST DETAILS/RESULTS/ACTIONS
E6 CHECK THE FUEL PUMP MODULE LOW END RESISTANCE (Continued)	
2 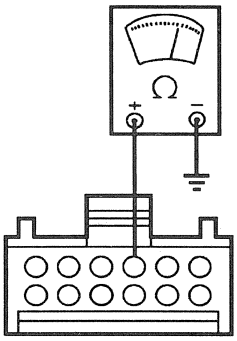 AK1068-A	2 Connect an ohmmeter between message center indicator module C246-3, circuit 29 (Y/W), and ground. • Is the resistance approximately 15 ohms? → **Yes** GO to **E7**. → **No** CHECK the fuel pump module for interference, REFER to Section 310-01. REPLACE the fuel pump module if no interference is found. CYCLE the ignition switch. RETRIEVE message center indicator module continuous DTCs and PERFORM the Message Center Indicator Module On-Board Diagnostic Test. If no DTCs are retrieved, CHECK the system for proper operation.
E7 CHECK THE MESSAGE CENTER INDICATOR DISPLAY	
1 Message Center Indicator Module 2 	3 Press the message center RANGE switch. • Does the message center display DISTANCE DATA ERROR or FUEL FLOW DATA ERROR? → **Yes** REPLACE the message center indicator module. CYCLE the ignition switch. RETRIEVE message center indicator module continuous DTCs and PERFORM the Message Center Indicator Module On-Board Diagnostic Test. If no DTCs are retrieved, CHECK the system for proper operation. → **No** The system is operating properly. CYCLE the ignition switch. RETRIEVE message center indicator module continuous DTCs and PERFORM the Message Center Indicator Module On-Board Diagnostic Test. If no DTCs are retrieved, CHECK the system for proper operation.

Official Licensed Product
Ford Motor Company

DIAGNOSIS AND TESTING (Continued)

PINPOINT TEST F: THE FUEL COMPUTER FUEL STATUS IS INOPERATIVE

NOTE: Not turning the ignition OFF during a fill of the fuel tank can cause inaccurate indication. Cycle the ignition switch OFF and back to RUN to correct indication. If the vehicle is parked on a severe incline and the ignition switch is cycled from OFF to RUN, inaccurate indication can result. Stop vehicle on a level surface and cycle the ignition switch from OFF to RUN to correct indication.

TEST CONDITIONS	TEST DETAILS/RESULTS/ACTIONS
F1 VERIFY FUEL GAUGE OPERATION	
	1 Check the fuel gauge operation. • Does the fuel gauge operate properly? → **Yes** GO to **F2**. → **No** REFER to Section 413-01.
F2 CHECK FOR MESSAGE CENTER INDICATOR MODULE DTCS	
1 2 3 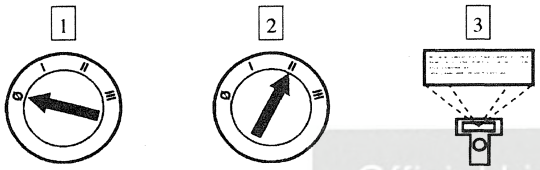 Retrieve DTCs	• Is DTC B1201 or B1204 retrieved? → **Yes** REFER to the Message Center (MC) Indicator Module Diagnostic Trouble Code (DTC) Index to repair DTCs. → **No** GO to **F3**.

Official Licensed Product
Ford Motor Company

(Continued)

DIAGNOSIS AND TESTING (Continued)

PINPOINT TEST F: THE FUEL COMPUTER FUEL STATUS IS INOPERATIVE (Continued)

TEST CONDITIONS	TEST DETAILS/RESULTS/ACTIONS
F3 CHECK THE GROUNDS	
1 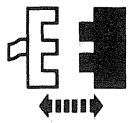 Message Center Indicator Module C208 2 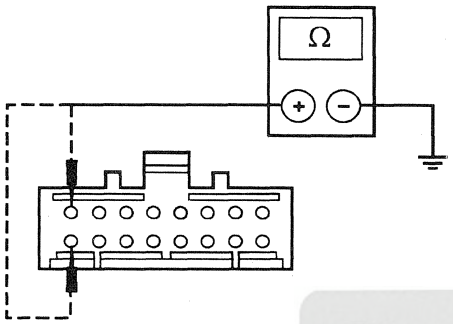 GK5335-A	2 Connect an ohmmeter between message center indicator module C208-36, circuit 57 (BK), and ground; then between message center indicator module C208-28, circuit 875 (BK/LB), and ground. • Is the resistance 5 ohms or less in both circuits? → **Yes** GO to **F4**. → **No** REPAIR the suspect circuit. CYCLE the ignition switch. RETRIEVE message center indicator module continuous DTCs and PERFORM the Message Center Indicator Module On-Board Diagnostic Test. If no DTCs are retrieved, CHECK the system for proper operation.

Official Licensed Ford Motor Company

(Continued)

DIAGNOSIS AND TESTING (Continued)

PINPOINT TEST F: THE FUEL COMPUTER FUEL STATUS IS INOPERATIVE (Continued)

TEST CONDITIONS	TEST DETAILS/RESULTS/ACTIONS
F4 CHECK THE FUEL PUMP MODULE	
1 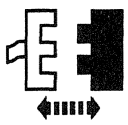 Message Center Indicator Module C246 2 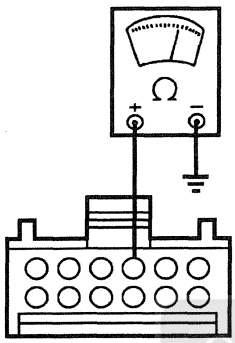 AK1068-A	2 Connect an ohmmeter between message center indicator module C246-3, circuit 29 (Y/W), and ground. • Is the resistance between 15 - 160 ohms? → **Yes** GO to **F5**. → **No** REPLACE the fuel pump module. REFER to Section 310-01. CYCLE the ignition switch. RETRIEVE message center indicator module continuous DTCs and PERFORM the Message Center Indicator Module On-Board Diagnostic Test. If no DTCs are retrieved, CHECK the system for proper operation.
F5 CHECK THE FLOAT TRAVEL	
2 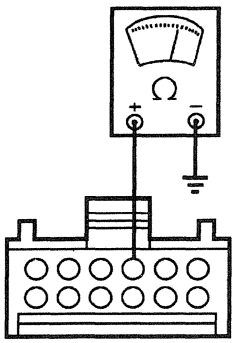 AK1068-A	1 Fill the fuel tank to the FULL level. 2 Connect an ohmmeter between message center indicator module C246-3, circuit 29 (Y/W), and ground. • Is the resistance approximately 160 ohms? → **Yes** GO to **F6**. → **No** CHECK the fuel pump module for interference; REFER to Section 310-01. REPLACE the fuel pump module if no interference is found. CYCLE the ignition switch. RETRIEVE message center indicator module continuous DTCs and PERFORM the Message Center Indicator Module On-Board Diagnostic Test. If no DTCs are retrieved, CHECK the system for proper operation.
F6 CHECK THE FUEL PUMP MODULE LOW END RESISTANCE	
	1 Drain the fuel tank.

(Continued)

Official Licensed Product Ford Motor Company

DIAGNOSIS AND TESTING (Continued)

PINPOINT TEST F: THE FUEL COMPUTER FUEL STATUS IS INOPERATIVE (Continued)

TEST CONDITIONS	TEST DETAILS/RESULTS/ACTIONS
F6 CHECK THE FUEL PUMP MODULE LOW END RESISTANCE (Continued)	
2 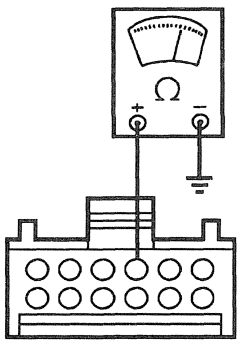 AK1068-A	2 Connect an ohmmeter between message center indicator module C246-3, circuit 29 (Y/W), and ground. • Is the resistance approximately 15 ohms? → **Yes** GO to **F7**. → **No** CHECK the fuel pump module for interference; REFER to Section 310-01. REPLACE the fuel pump module if no interference is found. CYCLE the ignition switch. RETRIEVE message center indicator module continuous DTCs and PERFORM the Message Center Indicator Module On-Board Diagnostic Test. If no DTCs are retrieved, CHECK the system for proper operation.
F7 CHECK THE FUEL ANALOG INPUT	
	1 Perform the A/D Channel Test 2; refer to A/D Channel Tests. Value must be between 025 and 240 as displayed on the RA/D Chan #2 screen. • Does the message center indicator module pass test A/D 2? → **Yes** The system is operating properly. CYCLE the ignition switch. RETRIEVE message center indicator module continuous DTCs and PERFORM the Message Center Indicator Module On-Board Diagnostic Test. If no DTCs are retrieved, CHECK the system for proper operation. → **No** REPLACE the message center indicator module. CYCLE the ignition switch. RETRIEVE message center indicator module continuous DTCs and PERFORM the Message Center Indicator Module On-Board Diagnostic Test. If no DTCs are retrieved, CHECK the system for proper operation.

Official License Ford Motor Company

DIAGNOSIS AND TESTING (Continued)

PINPOINT TEST G: THE FUEL COMPUTER ECONOMY IS INCORRECT

TEST CONDITIONS	TEST DETAILS/RESULTS/ACTIONS
G1 VERIFY FUEL GAUGE OPERATION	
	1 Check the fuel gauge operation. • Does the fuel gauge operate properly? → **Yes** GO to **G2**. → **No** REFER to Section 413-01.
G2 CHECK FOR MESSAGE CENTER INDICATOR MODULE DTCS	
1 2 3 Retrieve DTCs	• Is DTC U1430 or U1123 retrieved? → **Yes** REFER to the Message Center (MC) Indicator Module Diagnostic Trouble Code (DTC) Index to REPAIR DTCs. → **No** GO to **G3**.

Official Licensed Product
Ford Motor Company

(Continued)

DIAGNOSIS AND TESTING (Continued)

PINPOINT TEST G: THE FUEL COMPUTER ECONOMY IS INCORRECT (Continued)

TEST CONDITIONS	TEST DETAILS/RESULTS/ACTIONS
G3 CHECK THE GROUNDS	
1 Message Center Indicator Module C208 2 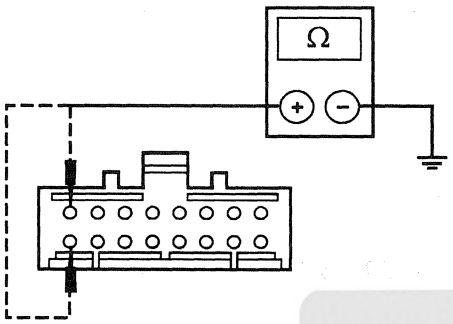 GK5335-A	2 Connect an ohmmeter between message center indicator module C208-36, circuit 57 (BK), and ground, then between message center indicator module C208-28, circuit 875 (BK/LB), and ground. • Is the resistance 5 ohms or less in both circuits? → **Yes** GO to **G4**. → **No** REPAIR the suspect circuit. CYCLE the ignition switch. RETRIEVE message center indicator module continuous DTCs and PERFORM the Message Center Indicator Module On-Board Diagnostic Test. If no DTCs are retrieved, CHECK the system for proper operation.

Official Licensed Ford Motor Company

(Continued)

DIAGNOSIS AND TESTING (Continued)

PINPOINT TEST G: THE FUEL COMPUTER ECONOMY IS INCORRECT (Continued)

TEST CONDITIONS	TEST DETAILS/RESULTS/ACTIONS
G4 CHECK THE MESSAGE CENTER INDICATOR DISPLAY	
1 Message Center Indicator Module 2	3 Press the message center switch ECONOMY. • Does the message center indicator display FUEL FLOW DATA ERROR or DISTANCE DATA ERROR? → **Yes** REPLACE the message center indicator module. CYCLE the ignition switch. RETRIEVE message center indicator module continuous DTCs and PERFORM the Message Center Indicator Module On-Board Diagnostic Test. If no DTCs are retrieved, CHECK the system for proper operation. → **No** The system is operating properly. CYCLE the ignition switch. RETRIEVE message center indicator module continuous DTCs and PERFORM the Message Center Indicator Module On-Board Diagnostic Test. If no DTCs are retrieved, CHECK the system for proper operation.

Official Licensed Product
Ford Motor Company

DIAGNOSIS AND TESTING (Continued)

PINPOINT TEST H: THE AIR SUSPENSION SWITCH WARNING IS INCORRECT

TEST CONDITIONS	TEST DETAILS/RESULTS/ACTIONS
H1 CHECK PID ASDISSW FOR ON	
   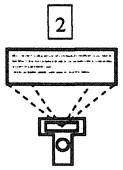 Message Center Indicator Module PID ASDISSW	3 Actuate the air suspension switch to the ON position while monitoring PID ASDISSW. • Does the PID ASDISSW read ON with the switch in the ON position? → **Yes** GO to **H2.** → **No** GO to **H3.**
H2 CHECK PID ASDISSW FOR OFF	
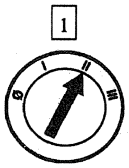 Message Center Indicator Module PID ASDISSW	3 Actuate the air suspension switch to the OFF position while monitoring PID ASDISSW. • Does the PID ASDISSW read OFF with the switch in the OFF position? → **Yes** The air suspension switch is OK. The system is operating properly at this time. → **No** GO to **H4.**

Official Licensed Product Ford Motor Company

(Continued)

DIAGNOSIS AND TESTING (Continued)

PINPOINT TEST H: THE AIR SUSPENSION SWITCH WARNING IS INCORRECT (Continued)

TEST CONDITIONS	TEST DETAILS/RESULTS/ACTIONS
H3 CHECK CIRCUIT 425 (BR/PK) FOR AN OPEN	
NOTE: Verify the air suspension switch is in the ON position.	
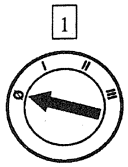 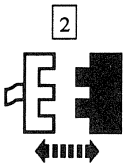 Message Center Indicator Module C246 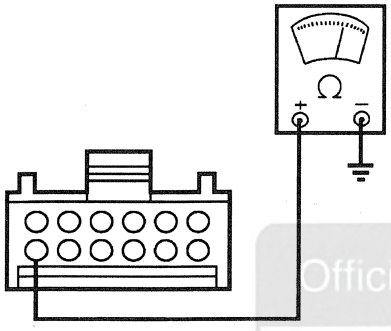 AK1207-A	3 Connect an ohmmeter between message center indicator module C246-12, circuit 425 (BR/PK), and ground. • Is the resistance 10 ohms or less? → **Yes** REPLACE the message center indicator module. CYCLE the ignition switch. RETRIEVE message center indicator module continuous DTCs and PERFORM the Message Center Indicator Module On-Board Diagnostic Test. If no DTCs are retrieved, CHECK the system for proper operation. → **No** REPAIR circuit 425 (BR/PK). CYCLE the ignition switch. RETRIEVE message center indicator module continuous DTCs and PERFORM the Message Center Indicator Module On-Board Diagnostic Test. If no DTCs are retrieved, CHECK the system for proper operation.

(Continued)

Official Licensed Product
Ford Motor Company

DIAGNOSIS AND TESTING (Continued)

PINPOINT TEST H: THE AIR SUSPENSION SWITCH WARNING IS INCORRECT (Continued)

TEST CONDITIONS	TEST DETAILS/RESULTS/ACTIONS
H4 CHECK FOR A SHORTED AIR SUSPENSION SERVICE SWITCH	
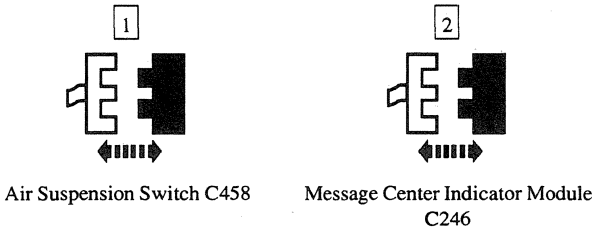 Air Suspension Switch C458 Message Center Indicator Module C246 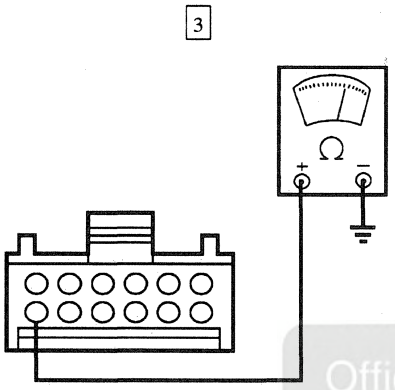 AK1207-A	3 Connect an ohmmeter between message center indicator module C246-12, circuit 425 (BR/PK), and ground. • Is the resistance 10 ohms or less? → **Yes** GO to **H5**. → **No** REPLACE the air suspension switch. CYCLE the ignition switch. RETRIEVE message center indicator module continuous DTCs and PERFORM the Message Center Indicator Module On-Board Diagnostic Test. If no DTCs are retrieved, CHECK the system for proper operation.

Official Licensed Ford Motor Company®

(Continued)

DIAGNOSIS AND TESTING (Continued)

PINPOINT TEST H: THE AIR SUSPENSION SWITCH WARNING IS INCORRECT (Continued)

TEST CONDITIONS	TEST DETAILS/RESULTS/ACTIONS
H5 CHECK FOR A SHORTED STEERING AND SUSPENSION CONTROL MODULE	
1 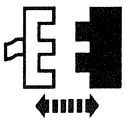 Steering and Suspension Control Module C205 2 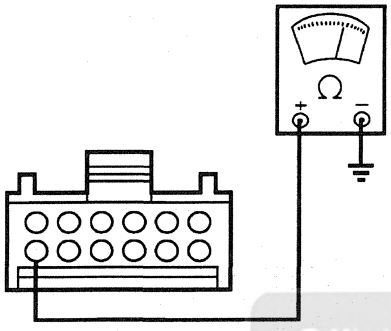 AK1207-A	2 Connect an ohmmeter between message center indicator module C246-12, circuit 425 (BR/PK), and ground. • Is the resistance 10 ohms or less? → **Yes** REPAIR circuit 425 (BR/PK) for a short to ground. CYCLE the ignition switch. RETRIEVE message center indicator module continuous DTCs and PERFORM the Message Center Indicator Module On-Board Diagnostic Test. If no DTCs are retrieved, CHECK the system for proper operation. → **No** REPLACE the steering and suspension control module; REFER to Section 204-05. CYCLE the ignition switch. RETRIEVE message center indicator module continuous DTCs and PERFORM the Message Center Indicator Module On-Board Diagnostic Test. If no DTCs are retrieved, CHECK the system for proper operation.

Official Licensed Product
Ford Motor Company

DIAGNOSIS AND TESTING (Continued)

PINPOINT TEST J: THE AIR SUSPENSION SYSTEM WARNING IS INCORRECT

TEST CONDITIONS	TEST DETAILS/RESULTS/ACTIONS
J1 CHECK THE DISPLAY	
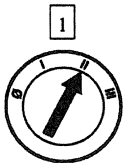	2 Check the message center indicator module display. • Does the message center indicator module display CHECK AIR RIDE SWITCH? → **Yes** GO to **J2**. → **No** The system is operating properly. VERIFY the symptom. CYCLE the ignition switch. RETRIEVE message center indicator module continuous DTCs and PERFORM the Message Center Indicator Module On-Board Diagnostic Test. If no DTCs are retrieved, CHECK the system for proper operation.
J2 CHECK FOR THE AIR SUSPENSION WARNING	
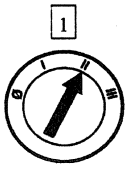 Message Center Indicator Module PID AS__TRIM	• Does the PID AS__TRIM read ON? → **Yes** GO to **J3**. → **No** REPLACE the message center indicator module. CYCLE the ignition switch. RETRIEVE message center indicator module continuous DTCs and PERFORM the Message Center Indicator Module On-Board Diagnostic Test. If no DTCs are retrieved, CHECK the system for proper operation.

(Continued)

Official Licensed Ford Motor Company

DIAGNOSIS AND TESTING (Continued)

PINPOINT TEST J: THE AIR SUSPENSION SYSTEM WARNING IS INCORRECT (Continued)

TEST CONDITIONS	TEST DETAILS/RESULTS/ACTIONS
J3 CHECK CIRCUIT 419 (DG/LG) FOR A SHORT TO GROUND	
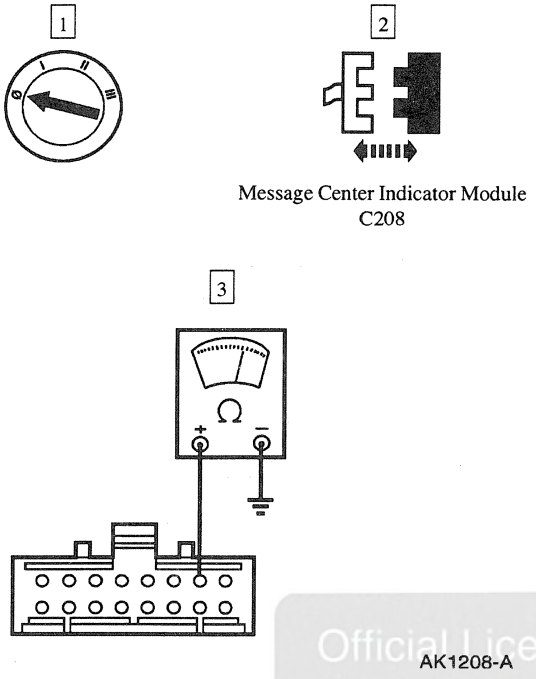	3 Connect an ohmmeter between message center indicator module C208-22, circuit 419 (DG/LG), and ground. • Is the resistance 10 ohms or less? → **Yes** GO to **J4**. → **No** GO to Section 204-05.

Official Licensed Product
Ford Motor Company

(Continued)

DIAGNOSIS AND TESTING (Continued)

PINPOINT TEST J: THE AIR SUSPENSION SYSTEM WARNING IS INCORRECT (Continued)

TEST CONDITIONS	TEST DETAILS/RESULTS/ACTIONS
J4 CHECK THE STEERING AND SUSPENSION CONTROL MODULE	
1 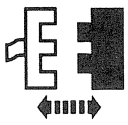 Steering and Suspension Control Module C205 2 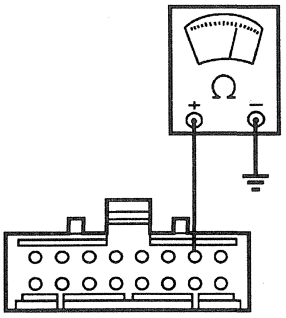 AK1208-A	2 Connect an ohmmeter between message center indicator module C208-22, circuit 419 (DG/LG), and ground. • Is the resistance 10 ohms or less? → **Yes** REPAIR circuit 419 (DG/LG). CYCLE the ignition switch. RETRIEVE message center indicator module continuous DTCs and PERFORM the Message Center Indicator Module On-Board Diagnostic Test. If no DTCs are retrieved, CHECK the system for proper operation. → **No** REPLACE the steering and suspension control module. REFER to Section 204-05. CYCLE the ignition switch. RETRIEVE message center indicator module continuous DTCs and PERFORM the Message Center Indicator Module On-Board Diagnostic Test. If no DTCs are retrieved, CHECK the system for proper operation.

Official Licensed Product
Ford Motor Company

PINPOINT TEST K: THE ENGINE COOLANT LEVEL WARNING IS NOT OPERATING PROPERLY

TEST CONDITIONS	TEST DETAILS/RESULTS/ACTIONS
K1 CHECK THE PID COOLANT	
1 2 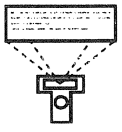 Message Center Indicator Module PID COOLANT	• Does the PID COOLANT read OK? → **Yes** GO to **K2**. → **No** GO to **K6**.

(Continued)

DIAGNOSIS AND TESTING (Continued)

PINPOINT TEST K: THE ENGINE COOLANT LEVEL WARNING IS NOT OPERATING PROPERLY (Continued)

TEST CONDITIONS	TEST DETAILS/RESULTS/ACTIONS
K2 CHECK THE ENGINE COOLANT LEVEL	
	[1] Check the engine coolant level. • Is the engine coolant at the specified level? → **Yes** The system is operating properly. VERIFY the symptom. CYCLE the ignition switch. RETRIEVE message center indicator module continuous DTCs and PERFORM the Message Center Indicator Module On-Board Diagnostic Test. If no DTCs are retrieved, CHECK the system for proper operation. → **No** GO to **K3**.
K3 CHECK THE ENGINE COOLANT LEVEL SENSOR	
[1] [2] 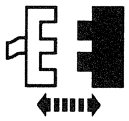 Engine Coolant Level Sensor C101 [3] 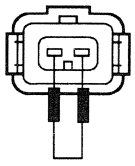 AK1209-A	[3] Connect a jumper wire between engine coolant level sensor C101, circuit 57 (BK), and circuit 794 (LB). • Does the message center indicator module display LOW ENGINE COOLANT? → **Yes** REPLACE the engine coolant level sensor. CYCLE the ignition switch. RETRIEVE message center indicator module continuous DTCs and PERFORM the Message Center Indicator Module On-Board Diagnostic Test. If no DTCs are retrieved, CHECK the system for proper operation. → **No** GO to **K4**.

Licensed Product Ford Motor Company

(Continued)

DIAGNOSIS AND TESTING (Continued)

PINPOINT TEST K: THE ENGINE COOLANT LEVEL WARNING IS NOT OPERATING PROPERLY (Continued)

TEST CONDITIONS	TEST DETAILS/RESULTS/ACTIONS
K4 CHECK CIRCUIT 57 (BK) FOR AN OPEN	
1 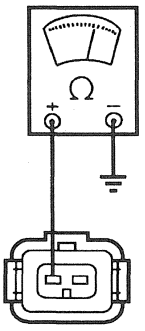 AK1210-A	1 Connect an ohmmeter between engine coolant level sensor C101, circuit 57 (BK), and ground. • Is the resistance 5 ohms or less? → **Yes** GO to **K5**. → **No** REPAIR circuit 57 (BK). CYCLE the ignition switch. RETRIEVE message center indicator module continuous DTCs and PERFORM the Message Center Indicator Module On-Board Diagnostic Test. If no DTCs are retrieved, CHECK the system for proper operation.
K5 CHECK CIRCUIT 794 (LB) FOR AN OPEN	
1 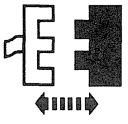 Message Center Indicator Module C208 2 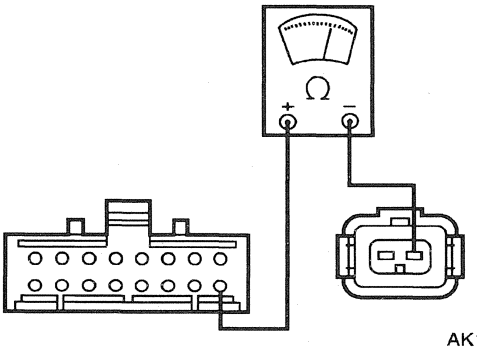 AK1211-A	2 Connect an ohmmeter between message center indicator module C208-29 and the engine coolant level sensor C101, circuit 794 (LB). • Is the resistance 5 ohms or less? → **Yes** REPLACE the message center indicator module. CYCLE the ignition switch. RETRIEVE message center indicator module continuous DTCs and PERFORM the Message Center Indicator Module On-Board Diagnostic Test. If no DTCs are retrieved, CHECK the system for proper operation. → **No** REPAIR circuit 794 (LB). CYCLE the ignition switch. RETRIEVE message center indicator module continuous DTCs and PERFORM the Message Center Indicator Module On-Board Diagnostic Test. If no DTCs are retrieved, CHECK the system for proper operation.

Official Licensed Product
Ford Motor Company

(Continued)

DIAGNOSIS AND TESTING (Continued)

PINPOINT TEST K: THE ENGINE COOLANT LEVEL WARNING IS NOT OPERATING PROPERLY (Continued)

TEST CONDITIONS	TEST DETAILS/RESULTS/ACTIONS
K6 CHECK FOR LOW ENGINE COOLANT LEVEL	
	1 Check the engine coolant level. • Is the engine coolant level low? → **Yes** FILL the engine coolant to the proper level. CYCLE the ignition switch. RETRIEVE message center indicator module continuous DTCs and PERFORM the Message Center Indicator Module On-Board Diagnostic Test. If no DTCs are retrieved, CHECK the system for proper operation. → **No** GO to **K7**.
K7 CHECK CIRCUIT 794 (LB) FOR A SHORT TO GROUND	
1 2 Message Center Indicator Module C208 3 AK1212-A	3 Connect an ohmmeter between the message center indicator module C208-29, circuit 794 (LB), and ground. • Is the resistance 10 kohms or less? → **Yes** GO to **K8**. → **No** REPLACE the message center indicator module. CYCLE the ignition switch. RETRIEVE message center indicator module continuous DTCs and PERFORM the Message Center Indicator Module On-Board Diagnostic Test. If no DTCs are retrieved, CHECK the system for proper operation.

(Continued)

Ford Licensed Product Ford Motor Company

DIAGNOSIS AND TESTING (Continued)

PINPOINT TEST K: THE ENGINE COOLANT LEVEL WARNING IS NOT OPERATING PROPERLY (Continued)

TEST CONDITIONS	TEST DETAILS/RESULTS/ACTIONS
K8 CHECK THE ENGINE COOLANT LEVEL SENSOR FOR A SHORT	
1 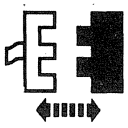 Engine Coolant Level Sensor C101	
2 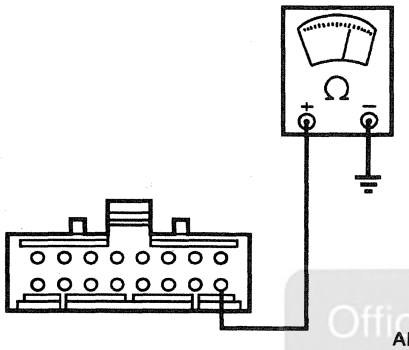 AK1212-A	2 Connect an ohmmeter between message center indicator module C208-29, circuit 794 (LB), and ground. • Is the resistance 10 kohms or less? → **Yes** REPAIR circuit 794 (LB). CYCLE the ignition switch. RETRIEVE message center indicator module continuous DTCs and PERFORM the Message Center Indicator Module On-Board Diagnostic Test. If no DTCs are retrieved, CHECK the system for proper operation. → **No** REPLACE the engine coolant level sensor. CYCLE the ignition switch. RETRIEVE message center indicator module continuous DTCs and PERFORM the Message Center Indicator Module On-Board Diagnostic Test. If no DTCs are retrieved, CHECK the system for proper operation.

Official Licensed Publication
Ford Motor Company

DIAGNOSIS AND TESTING (Continued)

PINPOINT TEST L: THE OIL LEVEL WARNING IS NOT OPERATING PROPERLY

TEST CONDITIONS	TEST DETAILS/RESULTS/ACTIONS
L1 CHECK OIL TEMPERATURE SENSOR CONNECTOR	
	[1] Inspect the oil temperature sensor connector C214 for proper connection and damage. • Is the oil temperature sensor OK and connected properly? → **Yes** GO to **L2.** → **No** REPAIR as required. CYCLE the ignition switch. RETRIEVE message center indicator module continuous DTCs and PERFORM the Message Center Indicator Module On-Board Diagnostic Test. If no DTCs are retrieved, CHECK the system for proper operation.
L2 CHECK THE PID OIL__LVL	
[1] [2] Message Center Indicator Module PID OIL__LVL	• Does the PID OIL__LVL read OK? → **Yes** GO to **L3.** → **No** GO to **L6.**
L3 CHECK THE ENGINE OIL LEVEL	
	[1] Check the engine oil level. • Is the engine oil at the specified level? → **Yes** The system is operating properly. VERIFY the symptom. CYCLE the ignition switch. RETRIEVE message center indicator module continuous DTCs and PERFORM the Message Center Indicator Module On-Board Diagnostic Test. If no DTCs are retrieved, CHECK the system for proper operation. → **No** GO to **L4.**

(Continued)

Official Licensed Product Ford Motor Company

DIAGNOSIS AND TESTING (Continued)

PINPOINT TEST L: THE OIL LEVEL WARNING IS NOT OPERATING PROPERLY (Continued)

TEST CONDITIONS	TEST DETAILS/RESULTS/ACTIONS
L4 CHECK THE ENGINE OIL LEVEL SENSOR	
 Engine Oil Level Sensor C124 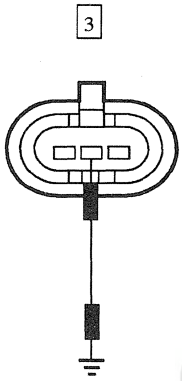 AK1213-A	3 Connect a jumper wire between engine oil level sensor C124, circuit 124 (W/PK), and ground. • Does the message center indicator module display LOW OIL LEVEL? → **Yes** REPLACE the engine oil level sensor. CYCLE the ignition switch. RETRIEVE message center indicator module continuous DTCs and PERFORM the Message Center Indicator Module On-Board Diagnostic Test. If no DTCs are retrieved, CHECK the system for proper operation. → **No** GO to **L5**.

Official Licensed Product
Ford Motor Company

(Continued)

DIAGNOSIS AND TESTING (Continued)

PINPOINT TEST L: THE OIL LEVEL WARNING IS NOT OPERATING PROPERLY (Continued)

TEST CONDITIONS	TEST DETAILS/RESULTS/ACTIONS
L5 CHECK CIRCUIT 258 (W/PK) FOR AN OPEN	
1 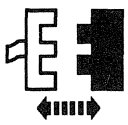 Message Center Indicator Module C208 2 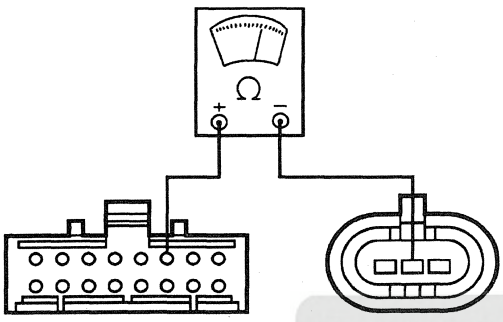 AK1214-A	2 Connect an ohmmeter between message center indicator module C208-23 and engine oil level sensor C124, circuit 258 (W/PK). • Is the resistance 5 ohms or less? → **Yes** REPLACE the message center indicator module. CYCLE the ignition switch. RETRIEVE message center indicator module continuous DTCs and PERFORM the Message Center Indicator Module On-Board Diagnostic Test. If no DTCs are retrieved, CHECK the system for proper operation. → **No** REPAIR circuit 258 (W/PK). CYCLE the ignition switch. RETRIEVE message center indicator module continuous DTCs and PERFORM the Message Center Indicator Module On-Board Diagnostic Test. If no DTCs are retrieved, CHECK the system for proper operation.
L6 CHECK FOR A LOW ENGINE OIL LEVEL	
	1 Check the engine oil level. • Is the engine oil level low? → **Yes** FILL the engine oil to the proper level. CYCLE the ignition switch. RETRIEVE message center indicator module continuous DTCs and PERFORM the Message Center Indicator Module On-Board Diagnostic Test. If no DTCs are retrieved, CHECK the system for proper operation. → **No** GO to **L7**.

Official Licensed Product
Ford Motor Company

(Continued)

DIAGNOSIS AND TESTING (Continued)

PINPOINT TEST L: THE OIL LEVEL WARNING IS NOT OPERATING PROPERLY (Continued)

TEST CONDITIONS	TEST DETAILS/RESULTS/ACTIONS
L7 CHECK CIRCUIT 258 (W/PK) FOR A SHORT TO GROUND	
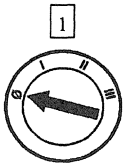 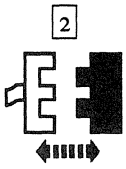 Message Center Indicator Module C208 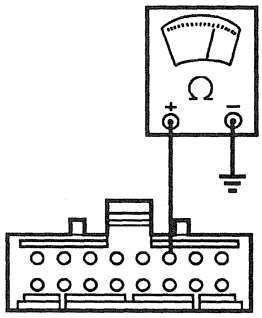 AK1215-A	3 Connect an ohmmeter between message center indicator module C208-23, circuit 258 (W/PK), and ground. • Is the resistance 10 kohms or less? → **Yes** GO to **L8**. → **No** REPLACE the message center indicator module. CYCLE the ignition switch. RETRIEVE message center indicator module continuous DTCs and PERFORM the Message Center Indicator Module On-Board Diagnostic Test. If no DTCs are retrieved, CHECK the system for proper operation.

(Continued)

Official Licensed Reprint
Ford Motor Company®

DIAGNOSIS AND TESTING (Continued)

PINPOINT TEST L: THE OIL LEVEL WARNING IS NOT OPERATING PROPERLY (Continued)

TEST CONDITIONS	TEST DETAILS/RESULTS/ACTIONS
L8 CHECK THE ENGINE OIL LEVEL SENSOR FOR A SHORT	
1 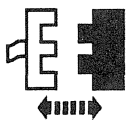 Engine Oil Level Sensor C124 2 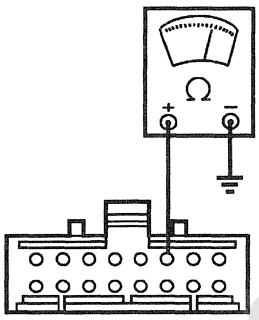 AK1215-A	2 Connect an ohmmeter between message center indicator module C208-23, circuit 258 (W/PK), and ground. • Is the resistance 10 kohms or less? → **Yes** REPAIR circuit 258 (W/PK). CYCLE the ignition switch. RETRIEVE message center indicator module continuous DTCs and PERFORM the Message Center Indicator Module On-Board Diagnostic Test. If no DTCs are retrieved, CHECK the system for proper operation. → **No** REPLACE the engine oil level sensor. CYCLE the ignition switch. RETRIEVE message center indicator module continuous DTCs and PERFORM the Message Center Indicator Module On-Board Diagnostic Test. If no DTCs are retrieved, CHECK the system for proper operation.

Official Licensed Product
Ford Motor Company

PINPOINT TEST M: THE WASHER FLUID LEVEL WARNING IS NOT OPERATING PROPERLY

TEST CONDITIONS	TEST DETAILS/RESULTS/ACTIONS
M1 CHECK THE PID WFLUID	
1 2 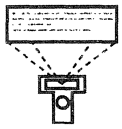 Message Center Indicator Module PID WFLUID	• Does the PID WFLUID read OK? → **Yes** GO to **M2**. → **No** GO to **M5**.

(Continued)

DIAGNOSIS AND TESTING (Continued)

PINPOINT TEST M: THE WASHER FLUID LEVEL WARNING IS NOT OPERATING PROPERLY (Continued)

TEST CONDITIONS	TEST DETAILS/RESULTS/ACTIONS
M2 CHECK THE WINDSHIELD WASHER FLUID LEVEL	
	1 Check the windshield washer fluid level. • Is the windshield washer fluid at the specified level? → **Yes** The system is operating properly. VERIFY the symptom. CYCLE the ignition switch. RETRIEVE message center indicator module continuous DTCs and PERFORM the Message Center Indicator Module On-Board Diagnostic Test. If no DTCs are retrieved, CHECK the system for proper operation. → **No** GO to **M3**.
M3 CHECK THE WINDSHIELD WASHER FLUID LEVEL SENSOR	
1 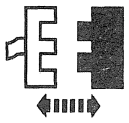 Windshield Washer Fluid Level Sensor C195 2 	3 Check the message center indicator display. • Does the message center indicator module display LOW WASHER FLUID? → **Yes** REPLACE the windshield washer fluid level sensor. CYCLE the ignition switch. RETRIEVE message center indicator module continuous DTCs and PERFORM the Message Center Indicator Module On-Board Diagnostic Test. If no DTCs are retrieved, CHECK the system for proper operation. → **No** GO to **M4**.

Official Licensed Product Ford Motor Company

(Continued)

DIAGNOSIS AND TESTING (Continued)

PINPOINT TEST M: THE WASHER FLUID LEVEL WARNING IS NOT OPERATING PROPERLY (Continued)

TEST CONDITIONS	TEST DETAILS/RESULTS/ACTIONS
M4 CHECK CIRCUIT 82 (PK/Y) FOR A SHORT TO GROUND	
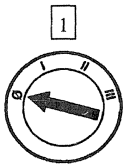 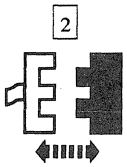 Message Center Indicator Module C208 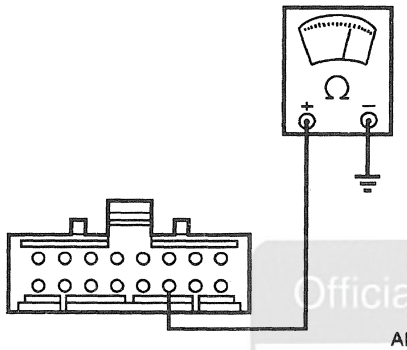 AK1219-A	3 Connect an ohmmeter between message center indicator module C208-31, circuit 82 (PK/Y), and ground. • Is the resistance 10 kohms or less? → **Yes** REPAIR circuit 82 (PK/Y). CYCLE the ignition switch. RETRIEVE message center indicator module continuous DTCs and PERFORM the Message Center Indicator Module On-Board Diagnostic Test. If no DTCs are retrieved, CHECK the system for proper operation. → **No** REPLACE the message center indicator module. CYCLE the ignition switch. RETRIEVE message center indicator module continuous DTCs and PERFORM the Message Center Indicator Module On-Board Diagnostic Test. If no DTCs are retrieved, CHECK the system for proper operation.
M5 CHECK FOR LOW WINDSHIELD WASHER FLUID LEVEL	
	1 Check for low windshield washer fluid level. • Is the windshield washer fluid level low? → **Yes** Fill windshield washer fluid to proper level. CYCLE the ignition switch. RETRIEVE message center indicator module continuous DTCs and PERFORM the Message Center Indicator Module On-Board Diagnostic Test. If no DTCs are retrieved, CHECK the system for proper operation. → **No** GO to **M6**.

(Continued)

Official Licensed Product
Ford Motor Company

DIAGNOSIS AND TESTING (Continued)

PINPOINT TEST M: THE WASHER FLUID LEVEL WARNING IS NOT OPERATING PROPERLY (Continued)

TEST CONDITIONS	TEST DETAILS/RESULTS/ACTIONS
M6 CHECK FOR A SHORTED WINDSHIELD WASHER FLUID LEVEL SENSOR	
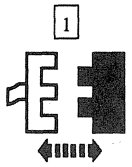 Windshield Washer Fluid Level Sensor C195 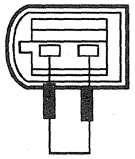 AK1216-A	3 Connect a jumper wire between windshield washer fluid level sensor C195, circuit 57 (BK), and circuit 82 (PK/Y). • Does the message center indicator module display LOW WASHER FLUID? → **Yes** GO to **M7**. → **No** REPLACE the windshield washer fluid level sensor. CYCLE the ignition switch. RETRIEVE message center indicator module continuous DTCs and PERFORM the Message Center Indicator Module On-Board Diagnostic Test. If no DTCs are retrieved, CHECK the system for proper operation.
M7 CHECK CIRCUIT 57 (BK) FOR AN OPEN	
1 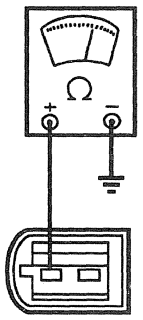 AK1217-A	1 Connect an ohmmeter between windshield washer fluid level sensor C195, circuit 57 (BK), and ground. • Is the resistance 5 ohms or less? → **Yes** GO to **M8**. → **No** REPAIR circuit 57 (BK). CYCLE the ignition switch. RETRIEVE message center indicator module continuous DTCs and PERFORM the Message Center Indicator Module On-Board Diagnostic Test. If no DTCs are retrieved, CHECK the system for proper operation.

(Continued)

Official Licensed Reprint
Ford Motor Company

DIAGNOSIS AND TESTING (Continued)

PINPOINT TEST M: THE WASHER FLUID LEVEL WARNING IS NOT OPERATING PROPERLY (Continued)

TEST CONDITIONS	TEST DETAILS/RESULTS/ACTIONS
M8 CHECK CIRCUIT 82 (PK/Y) FOR AN OPEN	
1 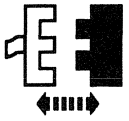 Message Center Indicator Module C208 2 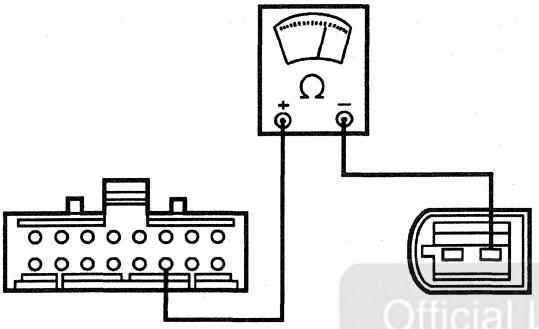 AK1218-A	2 Connect an ohmmeter between message center indicator module C208-31 and windshield washer fluid level sensor C195, circuit 82 (PK/Y). • Is the resistance 5 ohms or less? → **Yes** REPLACE the message center indicator module. CYCLE the ignition switch. RETRIEVE message center indicator module continuous DTCs and PERFORM the Message Center Indicator Module On-Board Diagnostic Test. If no DTCs are retrieved, CHECK the system for proper operation. → **No** REPAIR circuit 82 (PK/Y). CYCLE the ignition switch. RETRIEVE message center indicator module continuous DTCs and PERFORM the Message Center Indicator Module On-Board Diagnostic Test. If no DTCs are retrieved, CHECK the system for proper operation.

Official Licensed P
Ford Motor Comp

DIAGNOSIS AND TESTING (Continued)

PINPOINT TEST N: THE TRACTION CONTROL DISABLE WARNING IS NEVER/ALWAYS ON

TEST CONDITIONS	TEST DETAILS/RESULTS/ACTIONS
N1 DISABLE THE TRACTION CONTROL	
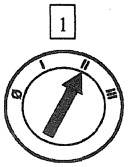	2 Disable the traction control system using the message center indicator module VEHICLE SETTING button. • Does TRACTION CONTROL OFF warning indicator come on? → **Yes** GO to **N2**. → **No** GO to **N6**.
N2 ENABLE THE TRACTION CONTROL	
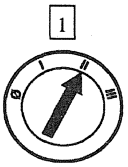	2 Enable the traction control system using the message center indicator module VEHICLE SETTING button. • Does TRACTION CONTROL OFF warning indicator go off? → **Yes** System is operating properly at this time. → **No** GO to **N3**.

Official Licensed Product
Ford Motor Company

(Continued)

DIAGNOSIS AND TESTING (Continued)

PINPOINT TEST N: THE TRACTION CONTROL DISABLE WARNING IS NEVER/ALWAYS ON (Continued)

TEST CONDITIONS	TEST DETAILS/RESULTS/ACTIONS
N3 COMMAND THE TRACTION CONTROL OFF WARNING INDICATOR OFF	
1 2 Message Center Indicator Module Active Command BRAKE SYSTEM 3 Trigger T/AOFFLMP OFF	• Does the traction control warning indicator turn off? → **Yes** REFER to Section 206-09. → **No** GO to **N4**.
N4 CHECK CIRCUIT 939 (P) FOR A SHORT TO GROUND	
1 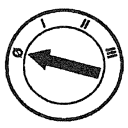 2 Indicator Lamp Module C238 3 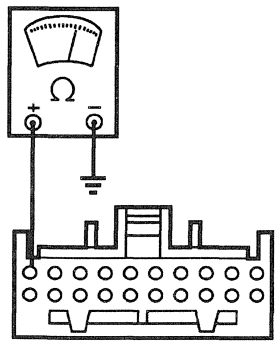 AK1221-A	3 Connect an ohmmeter between indicator lamp module C238-10, circuit 939 (P), and ground. • Is the resistance 10 kohms or less? → **Yes** GO to **N5**. → **No** REPLACE the indicator lamp module. CYCLE the ignition switch. RETRIEVE message center indicator module continuous DTCs and PERFORM the Message Center Indicator Module On-Board Diagnostic Test. If no DTCs are retrieved, CHECK the system for proper operation.

Official Licensed Product Ford Motor Company

(Continued)

DIAGNOSIS AND TESTING (Continued)

PINPOINT TEST N: THE TRACTION CONTROL DISABLE WARNING IS NEVER/ALWAYS ON (Continued)

TEST CONDITIONS	TEST DETAILS/RESULTS/ACTIONS
N5 CHECK THE MESSAGE CENTER INDICATOR MODULE FOR A SHORT	
1 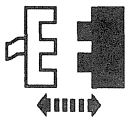 Message Center Indicator Module C208 2 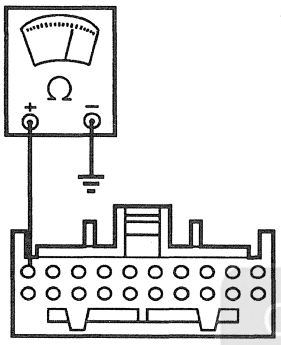 AK1221-A	2 Connect an ohmmeter between indicator lamp module C238-10, circuit 939 (P), and ground. • Is the resistance 10 kohms or less? → **Yes** REPAIR circuit 939 (P). CYCLE the ignition switch. RETRIEVE message center indicator module continuous DTCs and PERFORM the Message Center Indicator Module On-Board Diagnostic Test. If no DTCs are retrieved, CHECK the system for proper operation. → **No** REPLACE the message center indicator module. CYCLE the ignition switch. RETRIEVE message center indicator module continuous DTCs and PERFORM the Message Center Indicator Module On-Board Diagnostic Test. If no DTCs are retrieved, CHECK the system for proper operation.
N6 COMMAND THE TRACTION CONTROL OFF WARNING INDICATOR ON	
1 2 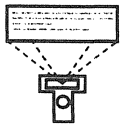 Message Center Indicator Module Active Command BRAKE SYSTEM 3 Trigger T/AOFFLMP ON	• Does the traction control warning indicator turn on? → **Yes** REFER to Section 206-09. → **No** GO to N7.

(Continued)

Official Licensed Product
Ford Motor Company

DIAGNOSIS AND TESTING (Continued)

PINPOINT TEST N: THE TRACTION CONTROL DISABLE WARNING IS NEVER/ALWAYS ON (Continued)

TEST CONDITIONS	TEST DETAILS/RESULTS/ACTIONS
N7 CHECK CIRCUIT 939 (P) FOR AN OPEN	
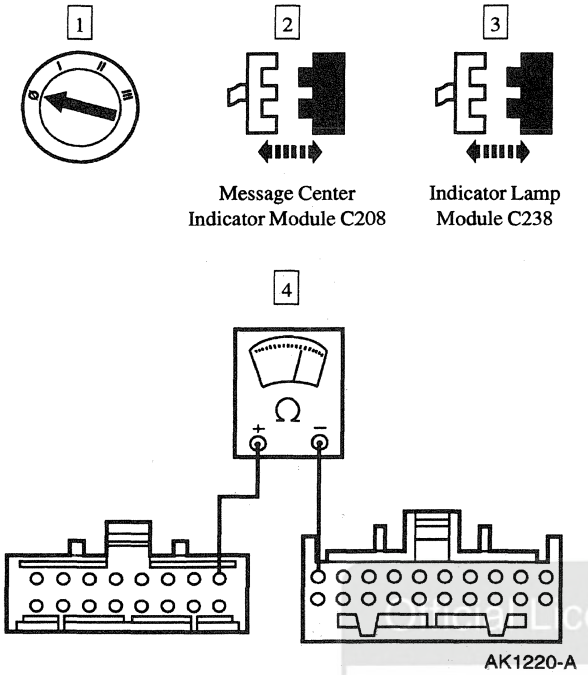	4 Connect an ohmmeter between message center indicator module C208-21 and indicator lamp module C238-10, circuit 939 (P). • Is the resistance 10 ohms or less? → **Yes** GO to **N8**. → **No** REPAIR circuit 939 (P). CYCLE the ignition switch. RETRIEVE message center indicator module continuous DTCs and PERFORM the Message Center Indicator Module On-Board Diagnostic Test. If no DTCs are retrieved, CHECK the system for proper operation.

(Continued)

Ford Motor Company Licensed Printing

DIAGNOSIS AND TESTING (Continued)

PINPOINT TEST N: THE TRACTION CONTROL DISABLE WARNING IS NEVER/ALWAYS ON (Continued)

TEST CONDITIONS	TEST DETAILS/RESULTS/ACTIONS
N8 CHECK THE TRACTION CONTROL WARNING INDICATOR BULB	
1 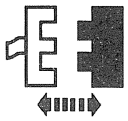 Traction Control Warning Indicator Bulb 2 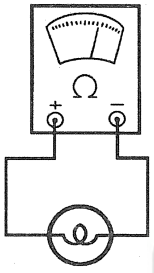 AK1333-A	2 Connect an ohmmeter between the traction control warning indicator bulb terminals. • Is the reading 5 ohms or less? → **Yes** REPLACE the message center indicator module. CYCLE the ignition switch. RETRIEVE message center indicator module continuous DTCs and PERFORM the Message Center Indicator Module On-Board Diagnostic Test. If no DTCs are retrieved, CHECK the system for proper operation. → **No** REPLACE the traction control indicator bulb. CYCLE the ignition switch. RETRIEVE message center indicator module continuous DTCs and PERFORM the Message Center Indicator Module On-Board Diagnostic Test. If no DTCs are retrieved, CHECK the system for proper operation.

Official Licensed Product
Ford Motor Company

PINPOINT TEST P: THE INDICATOR IS ALWAYS/NEVER ON — SAFETY BELT WARNING

TEST CONDITIONS	TEST DETAILS/RESULTS/ACTIONS
P1 CHECK INDICATOR	
1 	• Does the safety belt warning indicator illuminate? → **Yes** GO to **P2**. → **No** GO to **P3**.

(Continued)

DIAGNOSIS AND TESTING (Continued)

PINPOINT TEST P: THE INDICATOR IS ALWAYS/NEVER ON — SAFETY BELT WARNING (Continued)

TEST CONDITIONS	TEST DETAILS/RESULTS/ACTIONS
P2 CHECK INDICATOR TIME OUT	
	1 Make sure the driver safety belt is unbuckled. • Does the safety belt warning indicator stay on for about 60 seconds and then turn off? → **Yes** The safety belt warning indicator is operating properly at this time. → **No** GO to **P7**.
P3 CHECK MESSAGE CENTER INDICATOR MODULE OUTPUT	
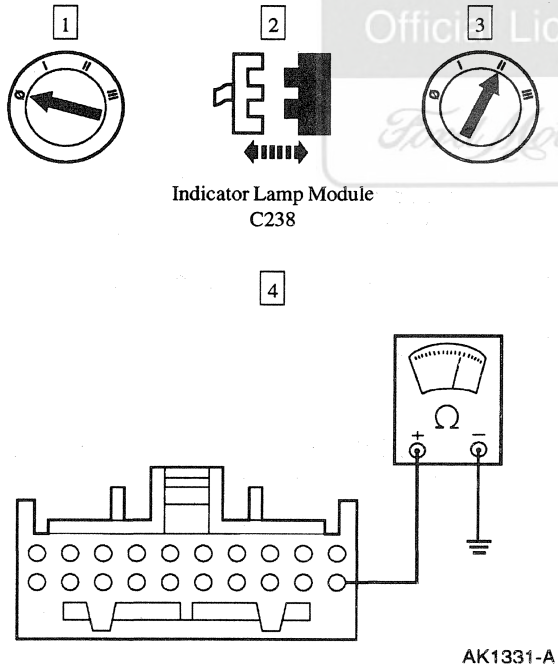	4 Connect an ohmmeter between indicator lamp module C238-11, circuit 450 (DG/LG), and ground.

(Continued)

Official Licensed Product Ford Motor Company

DIAGNOSIS AND TESTING (Continued)

PINPOINT TEST P: THE INDICATOR IS ALWAYS/NEVER ON — SAFETY BELT WARNING (Continued)

TEST CONDITIONS	TEST DETAILS/RESULTS/ACTIONS
P3 CHECK MESSAGE CENTER INDICATOR MODULE OUTPUT (Continued)	
5 Select Message Center Indicator Module Active Command WARNING LAMPS AND CHIME 6 Trigger SBLT LAMP ON	• Is the resistance reading 5 ohms or less? → **Yes** GO to **P4**. → **No** GO to **P6**.
P4 CHECK INDICATOR BULB	
1 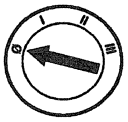 2 Safety Belt Warning Indicator Bulb 3 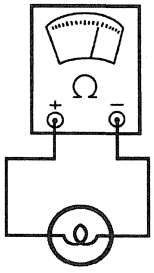 AK1333-A	3 Connect an ohmmeter between the safety belt warning indicator bulb terminals. • Is the resistance reading 5 ohms or less? → **Yes** GO to **P5**. → **No** REPLACE the safety belt warning indicator bulb. RETEST the system.

Official Licensed Product Ford Motor Company

(Continued)

DIAGNOSIS AND TESTING (Continued)

PINPOINT TEST P: THE INDICATOR IS ALWAYS/NEVER ON — SAFETY BELT WARNING (Continued)

TEST CONDITIONS	TEST DETAILS/RESULTS/ACTIONS
P5 CHECK INDICATOR POWER SUPPLY	
1 Indicator Lamp Module Connector C238 2 	3 Press the O/D button on the transmission range selector lever. • Does the O/D OFF indicator illuminate? → **Yes** REPLACE the indicator lamp module. RETEST the system. → **No** DIAGNOSE the O/D OFF indicator or the power supply; REFER to Section 307-05.
P6 CHECK CIRCUIT 450 (DG/LG) FOR AN OPEN	
1 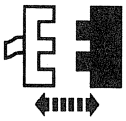 Message Center Indicator Module C208 2 Indicator Lamp Module C238 3 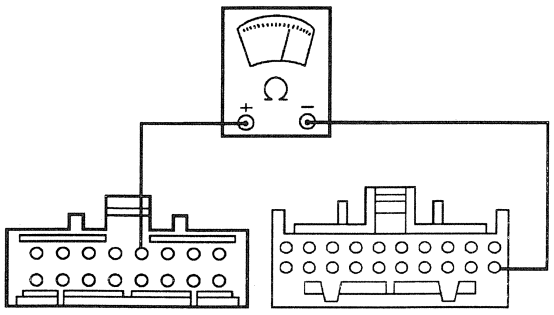 AK1332-A	3 Connect an ohmmeter between message center indicator module C208-24 and indicator lamp module 238-11, circuit 450 (DG/LG). • Is the resistance 5 ohms or less? → **Yes** REPLACE the message center indicator module. RETEST the system. → **No** REPAIR circuit 450 (DG/LG). RETEST the system.

Official Licensed Product Ford Motor Company

(Continued)

DIAGNOSIS AND TESTING (Continued)

PINPOINT TEST P: THE INDICATOR IS ALWAYS/NEVER ON — SAFETY BELT WARNING (Continued)

TEST CONDITIONS	TEST DETAILS/RESULTS/ACTIONS
P7 CHECK MESSAGE CENTER INDICATOR MODULE	
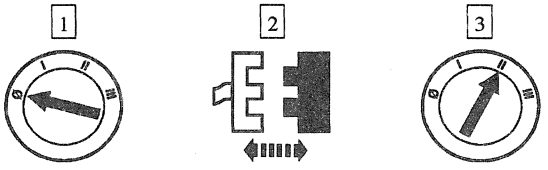 Message Center Indicator Module C208	• Is the safety belt warning indicator on? → **Yes** GO to **P8**. → **No** REPLACE the message center indicator module. RETEST the system.
P8 CHECK CIRCUIT 450 (DG/LG) FOR A SHORT TO GROUND	
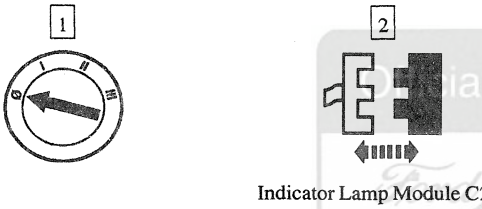 Indicator Lamp Module C238 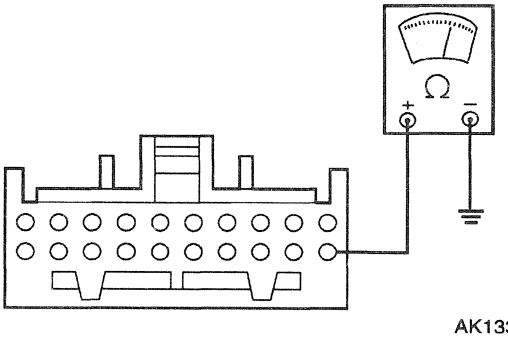 AK1331-A	3 Connect an ohmmeter between indicator lamp module C238-11, circuit 450 (DG/LG), and ground. • Is the resistance reading 10 kohms or less? → **Yes** REPAIR circuit 450 (DG/LG). RETEST the system. → **No** REPLACE the indicator lamp module. RETEST the system.

Official Licensed Product Ford Motor Company

DIAGNOSIS AND TESTING (Continued)

PINPOINT TEST Q: DTC B1201: FUEL SENDER CIRCUIT FAILURE

TEST CONDITIONS	TEST DETAILS/RESULTS/ACTIONS
Q1 VERIFY FUEL GAUGE OPERATION	
	[1] Check the fuel gauge operation. • Does the fuel gauge operate properly? → **Yes** GO to **Q2**. → **No** REFER to Section 413-01.
Q2 CHECK CIRCUIT 29 (Y/W) FOR B+	
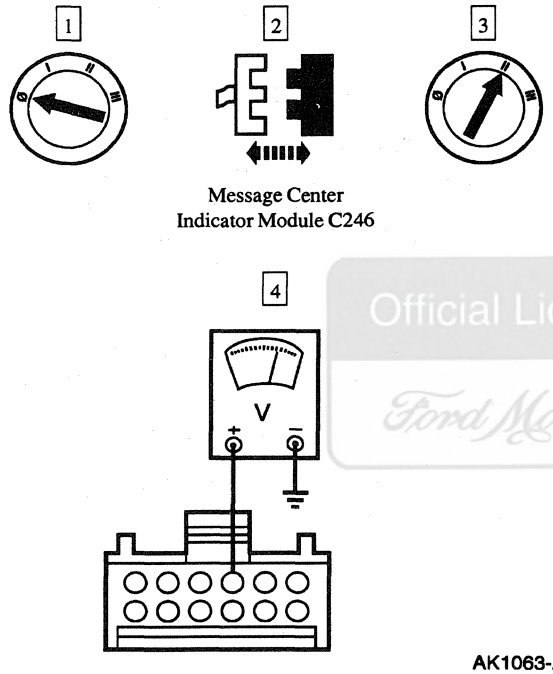	[4] Connect a voltmeter between the message center indicator module C246-3, circuit 29 (Y/W), and ground. • Is the voltage reading 0 volts? → **Yes** GO to **Q4**. → **No** GO to **Q3**.

Official Licensed Reproduction
Ford Motor Company

(Continued)

DIAGNOSIS AND TESTING (Continued)

PINPOINT TEST Q: DTC B1201: FUEL SENDER CIRCUIT FAILURE (Continued)

TEST CONDITIONS	TEST DETAILS/RESULTS/ACTIONS
Q3 CHECK THE POWERTRAIN CONTROL MODULE (PCM)	
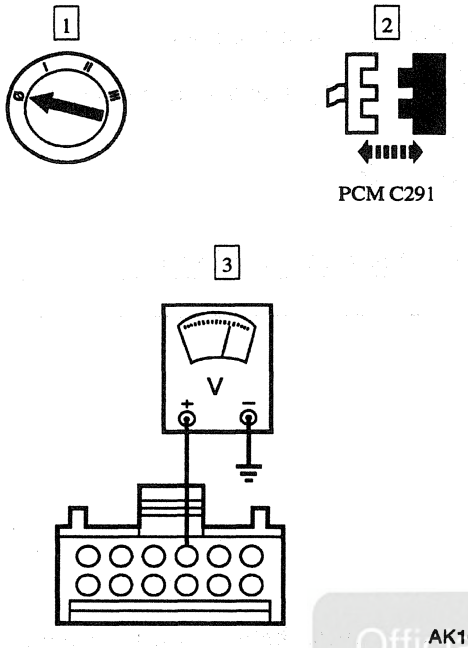	3 Connect a voltmeter to message center indicator module C246-3, circuit 29 (Y/W). • Is the voltage reading 0 volts? → **Yes** REPLACE the PCM; REFER to Section 303-14. CYCLE the ignition switch. RETRIEVE message center indicator module continuous DTCs and PERFORM the Message Center Indicator Module On-Board Diagnostic Test. If no DTCs are retrieved, CHECK the system for proper operation. → **No** REPAIR circuit 29 (Y/W). CYCLE the ignition switch. RETRIEVE message center indicator module continuous DTCs and PERFORM the Message Center Indicator Module On-Board Diagnostic Test. If no DTCs are retrieved, CHECK the system for proper operation.
Q4 CHECK CIRCUIT 29 (Y/W) FOR AN OPEN	
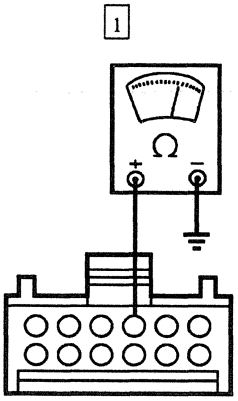	1 Connect an ohmmeter between message center indicator module C246-3, circuit 29 (Y/W), and ground. • Is the resistance 200 ohms or less? → **Yes** CLEAR the DTCs. CYCLE the ignition switch. RETRIEVE the message center indicator module continuous and Self-Test DTCs. If DTC B1201 is retrieved, REPLACE the message center indicator module. CYCLE the ignition switch. RETRIEVE message center indicator module continuous DTCs and PERFORM the Message Center Indicator Module On-Board Diagnostic Test. If no DTCs are retrieved, CHECK the system for proper operation. → **No** GO to **Q5**.

(Continued)

Official Licensed Product
Ford Motor Company

DIAGNOSIS AND TESTING (Continued)

PINPOINT TEST Q: DTC B1201: FUEL SENDER CIRCUIT FAILURE (Continued)

TEST CONDITIONS	TEST DETAILS/RESULTS/ACTIONS
Q5 CHECK CIRCUIT 875 (BK/LB) FOR AN OPEN	
1 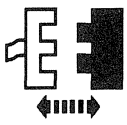 Fuel Pump Module Pigtail C410 2 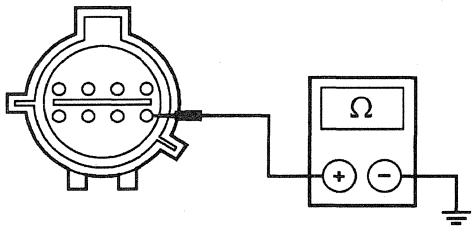 GK6922-A	2 Connect an ohmmeter between fuel pump module pigtail C401-5, circuit 875 (BK/LB), and ground. • Is the resistance 5 ohms or less? → **Yes** GO to **Q6**. → **No** REPAIR circuit 875 (BK/LB). CYCLE the ignition switch. RETRIEVE message center indicator module continuous DTCs and PERFORM the Message Center Indicator Module On-Board Diagnostic Test. If no DTCs are retrieved, CHECK the system for proper operation.
Q6 CHECK THE FUEL PUMP MODULE HARNESS FOR AN OPEN	
1 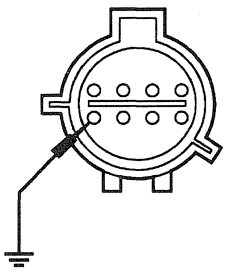 GK6923-A	1 Connect a jumper wire between fuel pump module pigtail C401-8, circuit 29 (Y/W), and ground.

(Continued)

Official Licensed Publication
Ford Motor Company

DIAGNOSIS AND TESTING (Continued)

PINPOINT TEST Q: DTC B1201: FUEL SENDER CIRCUIT FAILURE (Continued)

TEST CONDITIONS	TEST DETAILS/RESULTS/ACTIONS
Q6 CHECK THE FUEL PUMP MODULE HARNESS FOR AN OPEN (Continued)	
2 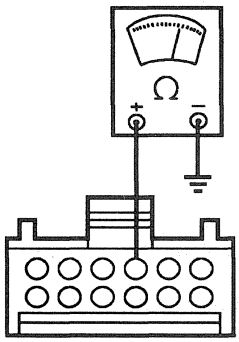 AK1068-A	2 Connect an ohmmeter between message center indicator module C246-3, circuit 29 (Y/W), and ground. • Is the resistance 5 ohms or less? → **Yes** REPLACE the fuel pump module. REFER to Section 310-01. CYCLE the ignition switch. RETRIEVE message center indicator module continuous DTCs and PERFORM the Message Center Indicator Module On-Board Diagnostic Test. If no DTCs are retrieved, CHECK the system for proper operation. → **No** REPAIR circuit 29 (Y/W). CYCLE the ignition switch. RETRIEVE message center indicator module continuous DTCs and PERFORM the Message Center Indicator Module On-Board Diagnostic Test. If no DTCs are retrieved, CHECK the system for proper operation.

PINPOINT TEST R: DTC B1204: FUEL SENDER CIRCUIT SHORT TO GROUND

TEST CONDITIONS	TEST DETAILS/RESULTS/ACTIONS
R1 VERIFY FUEL GAUGE OPERATION	
	1 Check the fuel gauge operation. • Does the fuel gauge operate properly? → **Yes** GO to **R2**. → **No** REFER to Section 413-01.

(Continued)

Official Licensed Product Ford Motor Company

DIAGNOSIS AND TESTING (Continued)

PINPOINT TEST R: DTC B1204: FUEL SENDER CIRCUIT SHORT TO GROUND (Continued)

TEST CONDITIONS	TEST DETAILS/RESULTS/ACTIONS
R2 CHECK CIRCUIT 29 (Y/W) FOR A SHORT TO GROUND	
1 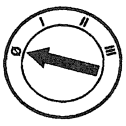 2 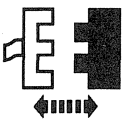 Message Center Indicator Module Connector C246 3 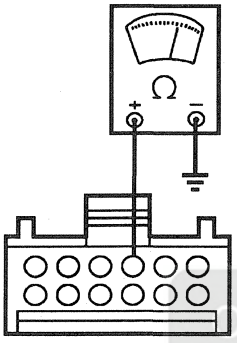 AK1068-A	3 Connect an ohmmeter between message center indicator module C246-3, circuit 29 (Y/W), and ground. • Is the resistance 5 ohms or less? → **Yes** GO to **R3**. → **No** CLEAR the DTCs. CYCLE the ignition switch. RETRIEVE message center indicator module continuous and Self-Test DTCs. If DTC B1204 is retrieved, REPLACE the message center indicator module. CYCLE the ignition switch. RETRIEVE message center indicator module continuous DTCs and PERFORM the Message Center Indicator Module On-Board Diagnostic Test. If no DTCs are retrieved, CHECK the system for proper operation.

Official Licensed Product
Ford Motor Company

(Continued)

DIAGNOSIS AND TESTING (Continued)

PINPOINT TEST R: DTC B1204: FUEL SENDER CIRCUIT SHORT TO GROUND (Continued)

TEST CONDITIONS	TEST DETAILS/RESULTS/ACTIONS
R3 CHECK POWERTRAIN CONTROL MODULE (PCM) FOR A SHORT TO GROUND	
1 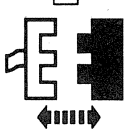 PCM C291	
2 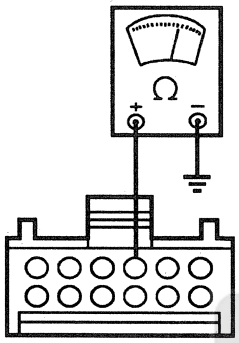 AK1068-A	2 Connect an ohmmeter between message center indicator module C246-3, circuit 29 (Y/W), and ground. • Is the resistance 5 ohms or less? → **Yes** GO to **R4**. → **No** REPLACE the PCM. REFER to Section 303-14. CYCLE the ignition switch. RETRIEVE message center indicator module continuous DTCs and PERFORM the Message Center Indicator Module On-Board Diagnostic Test. If no DTCs are retrieved, CHECK the system for proper operation.

Official Licensed Ford Motor Company

(Continued)

DIAGNOSIS AND TESTING (Continued)

PINPOINT TEST R: DTC B1204: FUEL SENDER CIRCUIT SHORT TO GROUND (Continued)

TEST CONDITIONS	TEST DETAILS/RESULTS/ACTIONS
R4 CHECK THE FUEL PUMP SENDER FOR A SHORT	
1 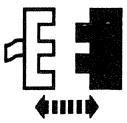 Fuel Pump Module Pigtail C401 2 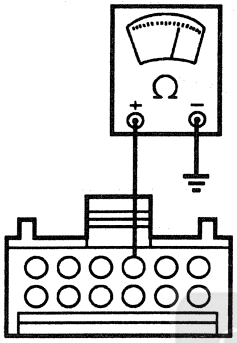 AK1068-A	2 Connect an ohmmeter between message center indicator module C246-3, circuit 29 (Y/W), and ground. • Is the resistance 5 ohms or less? → **Yes** REPAIR circuit 29 (Y/W). CYCLE the ignition switch. RETRIEVE message center indicator module continuous DTCs and PERFORM the Message Center Indicator Module On-Board Diagnostic Test. If no DTCs are retrieved, CHECK the system for proper operation. → **No** REPLACE the fuel pump module. REFER to Section 310-01. CYCLE the ignition switch. RETRIEVE message center indicator module continuous DTCs and PERFORM the Message Center Indicator Module On-Board Diagnostic Test. If no DTCs are retrieved, CHECK the system for proper operation.

Official Licensed Product
Ford Motor Company

DIAGNOSIS AND TESTING (Continued)

PINPOINT TEST S: DTC B1205: EIC SWITCH-1 ASSEMBLY CIRCUIT FAILURE

TEST CONDITIONS	TEST DETAILS/RESULTS/ACTIONS
S1 CHECK DTCS	
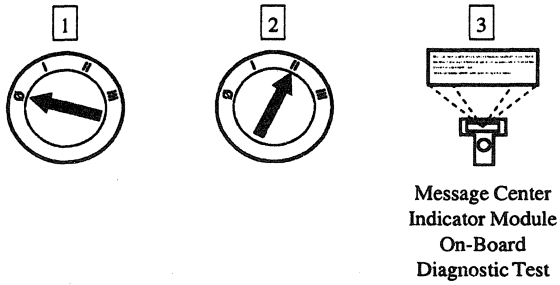 Message Center Indicator Module On-Board Diagnostic Test	• Are DTCs B1205 and B1209 retrieved? → **Yes** GO to Pinpoint Test AB. → **No** GO to **S2**.
S2 CHECK PID SWFEED1	
Message Center Indicator Module PID SWFEED1	• Does PID SWFEED1 read OPN/SHVBAT? → **Yes** GO to **S3**. → **No** CLEAR the DTCs. CYCLE the ignition switch. RETRIEVE message center indicator module continuous and Self-Test DTCs. If DTC B1205 is retrieved, REPLACE the message center indicator module. CYCLE the ignition switch. RETRIEVE message center indicator module continuous DTCs and PERFORM the Message Center Indicator Module On-Board Diagnostic Test. If no DTCs are retrieved, CHECK the system for proper operation.

Special Licensed Product Ford Motor Company

(Continued)

DIAGNOSIS AND TESTING (Continued)

PINPOINT TEST S: DTC B1205: EIC SWITCH-1 ASSEMBLY CIRCUIT FAILURE (Continued)

TEST CONDITIONS	TEST DETAILS/RESULTS/ACTIONS
S3 CHECK THE MESSAGE CENTER SWITCH FOR A SHORT	
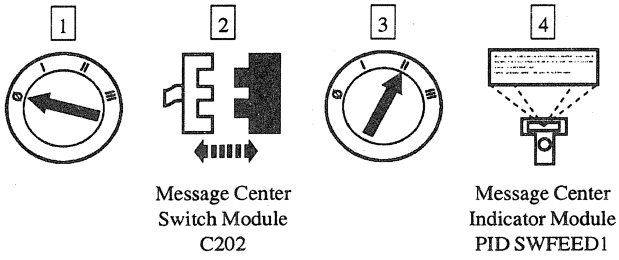 Message Center Switch Module C202 Message Center Indicator Module PID SWFEED1	• Does PID SWFEED1 read OPN/SHVBAT? → **Yes** REPLACE the message center switch module. CYCLE the ignition switch. RETRIEVE message center indicator module continuous DTCs and PERFORM the Message Center Indicator Module On-Board Diagnostic Test. If no DTCs are retrieved, CHECK the system for proper operation. → **No** REPAIR circuit 704 (DG/LG). TEST the system for normal operation.

Official Licensed Product Ford Motor Company

PINPOINT TEST DTC T: B1208: EIC SWITCH-1 ASSEMBLY CIRCUIT SHORT TO GROUND

TEST CONDITIONS	TEST DETAILS/RESULTS/ACTIONS
T1 CHECK PID SWFEED1	
 Message Center Indicator Module PID SWFEED1	• Does PID SWFEED1 read SHORTGND? → **Yes** GO to **T2**. → **No** CLEAR the DTCs. CYCLE the ignition switch. RETRIEVE message center indicator module continuous and Self-Test DTCs. If DTC B1208 is retrieved, REPLACE the message center indicator module. CYCLE the ignition switch. RETRIEVE message center indicator module continuous DTCs and PERFORM the Message Center Indicator Module On-Board Diagnostic Test. If no DTCs are retrieved, CHECK the system for proper operation.

(Continued)

DIAGNOSIS AND TESTING (Continued)

PINPOINT TEST DTC T: B1208: EIC SWITCH-1 ASSEMBLY CIRCUIT SHORT TO GROUND (Continued)

TEST CONDITIONS	TEST DETAILS/RESULTS/ACTIONS
T2 CHECK THE MESSAGE CENTER SWITCH FOR A SHORT TO GROUND	
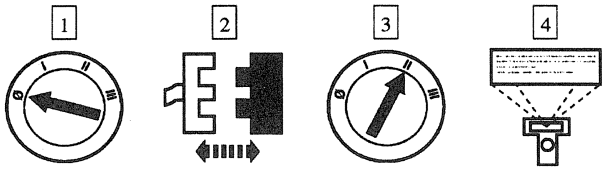 Message Center Switch Module C202 Message Center Indicator Module PID SWFEED1	• Does PID SWFEED1 read SHORTGND? → **Yes** GO to **T3**. → **No** REPLACE the message center switch module. CYCLE the ignition switch. RETRIEVE message center indicator module continuous DTCs and PERFORM the Message Center Indicator Module On-Board Diagnostic Test. If no DTCs are retrieved, CHECK the system for proper operation.

(Continued)

Official Licensed Ford Motor Company

DIAGNOSIS AND TESTING (Continued)

PINPOINT TEST DTC T: B1208: EIC SWITCH-1 ASSEMBLY CIRCUIT SHORT TO GROUND (Continued)

TEST CONDITIONS	TEST DETAILS/RESULTS/ACTIONS
T3 CHECK CIRCUIT 704 (DG/LG) FOR A SHORT TO GROUND	
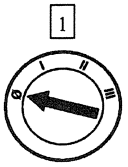 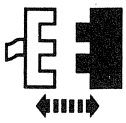 Message Center Indicator Module C246 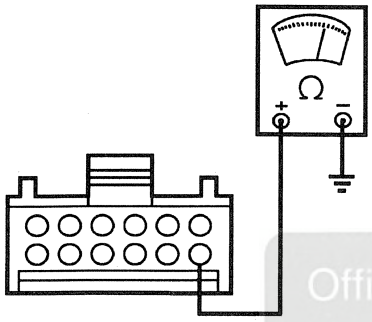 AK1070-A	3 Connect an ohmmeter to message center indicator module C246-7, circuit 704 (DG/LG). • Is the resistance 10 kohms or less? → **Yes** REPAIR circuit 704 (DG/LG). CYCLE the ignition switch. RETRIEVE message center indicator module continuous DTCs and PERFORM the Message Center Indicator Module On-Board Diagnostic Test. If no DTCs are retrieved, CHECK the system for proper operation. → **No** REPLACE the message center indicator module. CYCLE the ignition switch. RETRIEVE message center indicator module continuous DTCs and PERFORM the Message Center Indicator Module On-Board Diagnostic Test. If no DTCs are retrieved, CHECK the system for proper operation.

Official Licensed Part
Ford Motor Company

DIAGNOSIS AND TESTING (Continued)

PINPOINT TEST U: DTC B1209: EIC SWITCH-2 ASSEMBLY CIRCUIT FAILURE

TEST CONDITIONS	TEST DETAILS/RESULTS/ACTIONS
U1 CHECK DTCs	
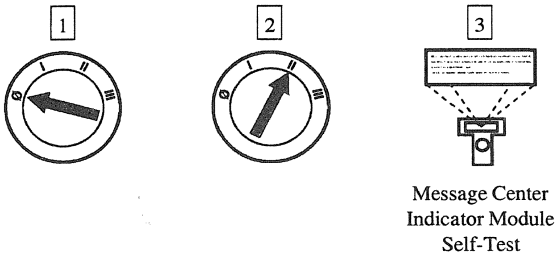 Message Center Indicator Module Self-Test	• Are DTCs B1205 and B1209 retrieved? → **Yes** GO to Pinpoint Test AB. → **No** GO to **U2.**
U2 CHECK PID SWFEED2	
Message Center Indicator Module PID SWFEED2	• Does PID SWFEED2 read OPN/SHVBAT? → **Yes** GO to **U3.** → **No** CLEAR DTCs. CYCLE the ignition switch. RETRIEVE message center indicator module continuous and Self-Test DTCs. If DTC B1209 is retrieved, REPLACE the message center indicator module. CYCLE the ignition switch. RETRIEVE message center indicator module continuous DTCs and PERFORM the Message Center Indicator Module On-Board Diagnostic Test. If no DTCs are retrieved, CHECK the system for proper operation.

(Continued)

Official Licensed Product Motor Company

DIAGNOSIS AND TESTING (Continued)

PINPOINT TEST U: DTC B1209: EIC SWITCH-2 ASSEMBLY CIRCUIT FAILURE (Continued)

TEST CONDITIONS	TEST DETAILS/RESULTS/ACTIONS
U3 CHECK THE MESSAGE CENTER SWITCH MODULE FOR A SHORT	
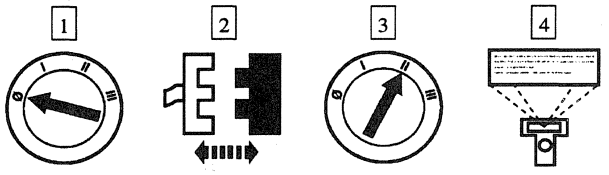 Message Center Switch Module C202 Message Center Indicator Module PID SWFEED2	• Does PID SWFEED2 read OPN/SHVBAT? → **Yes** REPAIR circuit 715 (LG). TEST the system for normal operation. → **No** REPLACE the message center switch module. CYCLE the ignition switch. RETRIEVE message center indicator module continuous DTCs and PERFORM the Message Center Indicator Module On-Board Diagnostic Test. If no DTCs are retrieved, CHECK the system for proper operation.

PINPOINT TEST V: DTC B1212: EIC SWITCH-2 ASSEMBLY CIRCUIT SHORT TO GROUND

TEST CONDITIONS	TEST DETAILS/RESULTS/ACTIONS
V1 CHECK PID SWFEED2	
 Message Center Indicator Module PID SWFEED2	• Does PID SWFEED2 read SHORTGND? → **Yes** GO to **V2**. → **No** CLEAR DTCs. CYCLE the ignition switch. RETRIEVE message center indicator module continuous and Self-Test DTCs. If DTC B1212 is retrieved, REPLACE the message center indicator module. CYCLE the ignition switch. RETRIEVE message center indicator module continuous DTCs and PERFORM the Message Center Indicator Module On-Board Diagnostic Test. If no DTCs are retrieved, CHECK the system for proper operation.

(Continued)

Official Licensed Ford Motor Company

DIAGNOSIS AND TESTING (Continued)

PINPOINT TEST V: DTC B1212: EIC SWITCH-2 ASSEMBLY CIRCUIT SHORT TO GROUND (Continued)

TEST CONDITIONS	TEST DETAILS/RESULTS/ACTIONS
V2 CHECK THE MESSAGE CENTER SWITCH FOR A SHORT TO GROUND	
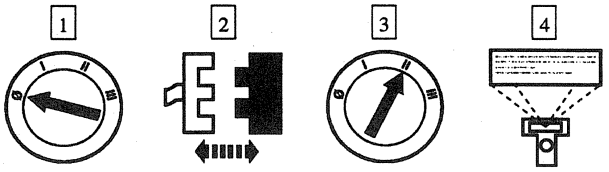 Message Center Switch Module C202 Message Center Indicator Module PID SWFEED2	• Does PID SWFEED2 read SHORTGND? → **Yes** GO to V3. → **No** REPLACE the message center switch module. CYCLE the ignition switch. RETRIEVE message center indicator module continuous DTCs and PERFORM the Message Center Indicator Module On-Board Diagnostic Test. If no DTCs are retrieved, CHECK the system for proper operation.

(Continued)

Official Licensed Ford Motor Company

DIAGNOSIS AND TESTING (Continued)

PINPOINT TEST V: DTC B1212: EIC SWITCH-2 ASSEMBLY CIRCUIT SHORT TO GROUND (Continued)

TEST CONDITIONS	TEST DETAILS/RESULTS/ACTIONS
V3 CHECK CIRCUIT 715 (LG) FOR A SHORT TO GROUND	
1 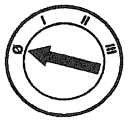 2 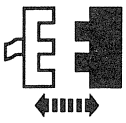 Message Center Indicator Module C246	
3 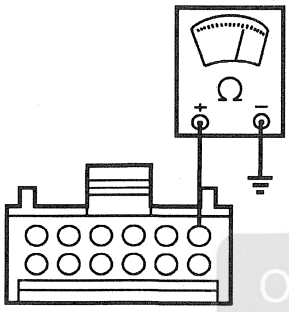 AK1072-A	3 Connect an ohmmeter between message center indicator module C246-1, circuit 715 (LG), and ground. • Is the resistance 10 kohms or less? → **Yes** REPAIR circuit 715 (LG). CYCLE the ignition switch. RETRIEVE message center indicator module continuous DTCs and PERFORM the Message Center Indicator Module On-Board Diagnostic Test. If no DTCs are retrieved, CHECK the system for proper operation. → **No** REPLACE the message center indicator module. CYCLE the ignition switch. RETRIEVE message center indicator module continuous DTCs and PERFORM the Message Center Indicator Module On-Board Diagnostic Test. If no DTCs are retrieved, CHECK the system for proper operation.

Official Licensed P
Ford Motor Company

DIAGNOSIS AND TESTING (Continued)

PINPOINT TEST W: DTC B1342: ECU IS DEFECTIVE

TEST CONDITIONS	TEST DETAILS/RESULTS/ACTIONS
W1 REPEAT SELF-TEST	
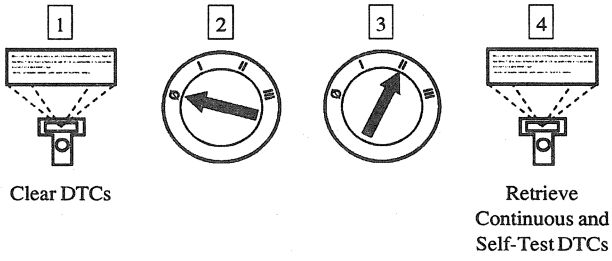	• Is DTC B1342 retrieved? → **Yes** REPLACE message center indicator module. CYCLE the ignition switch. RETRIEVE message center indicator module continuous DTCs and PERFORM the Message Center Indicator Module On-Board Diagnostic Test. If no DTCs are retrieved, CHECK the system for proper operation. → **No** REPAIR any retrieved DTCs. CYCLE the ignition switch. RETRIEVE message center indicator module continuous DTCs and PERFORM the Message Center Indicator Module On-Board Diagnostic Test. If no DTCs are retrieved, CHECK the system for proper operation.

Official Licensed Ford Motor Company

PINPOINT TEST X: DTC B1389: OIL TEMPERATURE SENSOR CIRCUIT FAILURE

TEST CONDITIONS	TEST DETAILS/RESULTS/ACTIONS
X1 CHECK OIL TEMPERATURE SENSOR CONNECTOR	
	1 Inspect the oil temperature sensor C124 for proper connection and damage. • Is the oil temperature sensor OK and connected properly? → **Yes** GO to **X2**. → **No** REPAIR as required. CYCLE the ignition switch. RETRIEVE message center indicator module continuous DTCs and PERFORM the Message Center Indicator Module On-Board Diagnostic Test. If no DTCs are retrieved, CHECK the system for proper operation.

(Continued)

DIAGNOSIS AND TESTING (Continued)

PINPOINT TEST X: DTC B1389: OIL TEMPERATURE SENSOR CIRCUIT FAILURE (Continued)

TEST CONDITIONS	TEST DETAILS/RESULTS/ACTIONS
X2 CHECK CIRCUIT 254 (DG/W) FOR A SHORT TO B+	
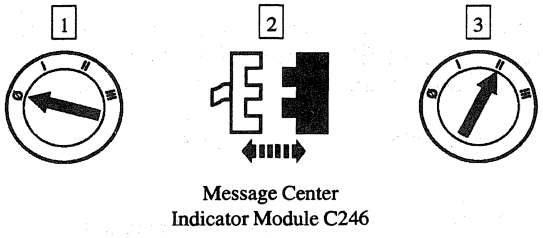 Message Center Indicator Module C246 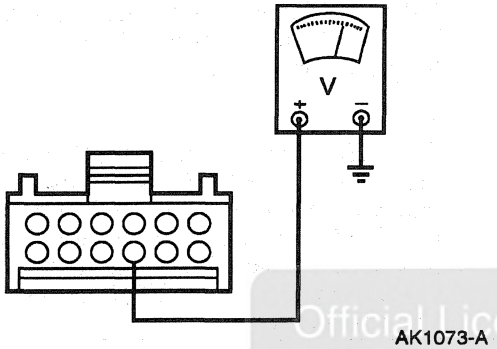 AK1073-A	4 Connect a voltmeter to message center indicator module C246-9, circuit 254 (DG/W). • Is the voltage reading 0 volts? → **Yes** GO to **X3**. → **No** REPAIR circuit 254 (DG/W). CYCLE the ignition switch. RETRIEVE message center indicator module continuous DTCs and PERFORM the Message Center Indicator Module On-Board Diagnostic Test. If no DTCs are retrieved, CHECK the system for proper operation.
X3 CHECK CIRCUIT 359 (GY/R) FOR AN OPEN	
 Oil Temperature Sensor C124 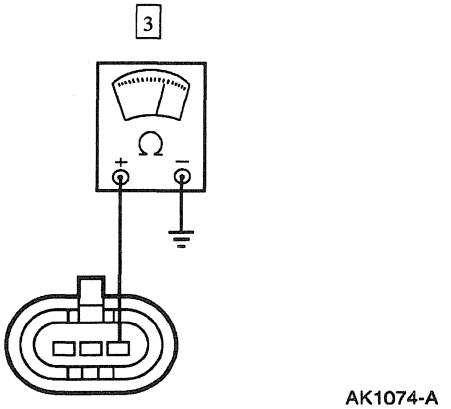 AK1074-A	3 Connect an ohmmeter between the oil temperature sensor C124, circuit 359 (GY/R), and ground. • Is the resistance 5 ohms or less? → **Yes** GO to **X4**. → **No** REPAIR circuit 359 (GY/R). CYCLE the ignition switch. RETRIEVE message center indicator module continuous DTCs and PERFORM the Message Center Indicator Module On-Board Diagnostic Test. If no DTCs are retrieved, CHECK the system for proper operation.

(Continued)

DIAGNOSIS AND TESTING (Continued)

PINPOINT TEST X: DTC B1389: OIL TEMPERATURE SENSOR CIRCUIT FAILURE (Continued)

TEST CONDITIONS	TEST DETAILS/RESULTS/ACTIONS
X4 CHECK CIRCUIT 254 (DG/W) FOR AN OPEN	
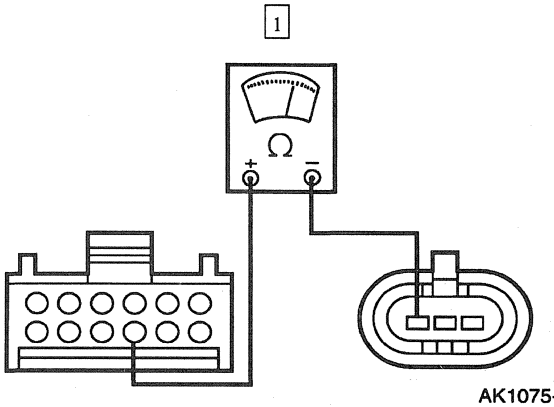 AK1075-A	1 Connect an ohmmeter between the message center indicator module C246-9 and the oil temperature sensor C124, circuit 254 (DG/W). • Is the resistance 5 ohms or less? → **Yes** REPLACE the oil temperature sensor. CYCLE the ignition switch. RETRIEVE message center indicator module continuous DTCs and PERFORM the Message Center Indicator Module On-Board Diagnostic Test. If no DTCs are retrieved, CHECK the system for proper operation. → **No** REPAIR circuit 254 (DG/W). CYCLE the ignition switch. RETRIEVE message center indicator module continuous DTCs and PERFORM the Message Center Indicator Module On-Board Diagnostic Test. If no DTCs are retrieved, CHECK the system for proper operation.

Official Licensed Ford Motor Company

DIAGNOSIS AND TESTING (Continued)

PINPOINT TEST Y: DTC B1390: OIL TEMPERATURE SENSOR CIRCUIT SHORT TO GROUND

TEST CONDITIONS	TEST DETAILS/RESULTS/ACTIONS
Y1 CHECK FOR A SHORT TO GROUND	
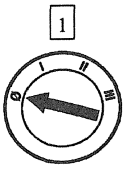 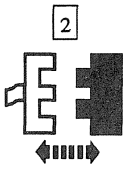 Message Center Indicator Module C246 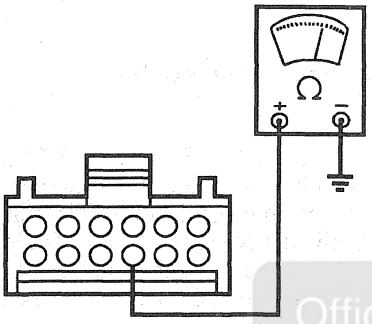 AK1201-A	3 Connect an ohmmeter between message center indicator module C246-9, circuit 254 (DG/W), and ground. • Is the resistance 5 ohms or less? → **Yes** GO to **Y2**. → **No** CLEAR DTCs. CYCLE the ignition switch. RETRIEVE message center indicator module continuous and Self-Test DTCs. If DTC B1390 is retrieved, REPLACE the message center indicator module. CYCLE the ignition switch. RETRIEVE message center indicator module continuous DTCs and PERFORM the Message Center Indicator Module On-Board Diagnostic Test. If no DTCs are retrieved, CHECK the system for proper operation.

(Continued)

Official Licensed Product
Ford Motor Company

DIAGNOSIS AND TESTING (Continued)

PINPOINT TEST Y: DTC B1390: OIL TEMPERATURE SENSOR CIRCUIT SHORT TO GROUND (Continued)

TEST CONDITIONS	TEST DETAILS/RESULTS/ACTIONS
Y2 CHECK CIRCUIT 254 (DG/W) FOR A SHORT TO GROUND	
1 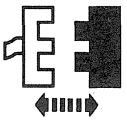 Oil Temperature Sensor C124 2 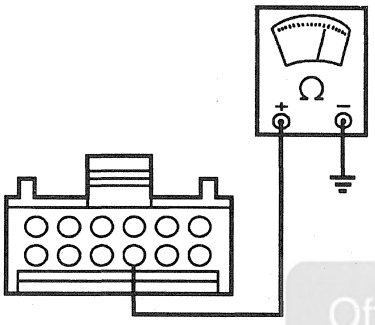 AK1201-A	2 Connect an ohmmeter between message center indicator module C246-9, circuit 254 (DG/W), and ground. • Is the resistance 5 ohms or less? → **Yes** REPAIR circuit 254 (DG/W). CYCLE the ignition switch. RETRIEVE message center indicator module continuous DTCs and PERFORM the Message Center Indicator Module On-Board Diagnostic Test. If no DTCs are retrieved, CHECK the system for proper operation. → **No** REPLACE the oil temperature sensor. CYCLE the ignition switch. RETRIEVE message center indicator module continuous DTCs and PERFORM the Message Center Indicator Module On-Board Diagnostic Test. If no DTCs are retrieved, CHECK the system for proper operation.

Official Licensed Ford Motor Company

PINPOINT TEST Z: DTC B1462: SEAT BELT SWITCH CIRCUIT FAILURE

TEST CONDITIONS	TEST DETAILS/RESULTS/ACTIONS
Z1 CHECK PID LFSBELT	
2 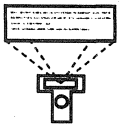 Read DSM PID D__SBELT	1 Verify the driver safety belt is unfastened and the safety belt buckle latch is clean and free of foreign material.

(Continued)

DIAGNOSIS AND TESTING (Continued)

PINPOINT TEST Z: DTC B1462: SEAT BELT SWITCH CIRCUIT FAILURE (Continued)

TEST CONDITIONS	TEST DETAILS/RESULTS/ACTIONS
Z1 CHECK PID LFSBELT (Continued)	
	• Does PID D__SBELT read OUT? → **Yes** GO to **Z2**. → **No** GO to **Z4**.
Z2 CHECK THE SAFETY BELT SWITCH	
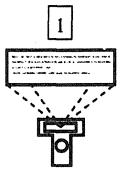 Driver Seat Module PID D__SBELT	[2] Buckle and unbuckle the driver safety belt several times while monitoring PID D__SBELT. • Does PID D__SBELT change from IN to OUT as the driver safety belt is buckled and unbuckled? → **Yes** GO to **Z3**. → **No** REPLACE the driver safety belt buckle. RETEST the system.
Z3 CHECK DTC	
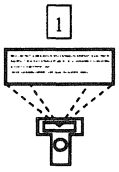 Driver Seat Module Self-Test	• Is DTC B1462 retrieved? → **Yes** REPLACE the driver seat module (DSM). RETEST the system. → **No** The system is operating properly at this time.

Official Licensed Product
Ford Motor Company®

(Continued)

DIAGNOSIS AND TESTING (Continued)

PINPOINT TEST Z: DTC B1462: SEAT BELT SWITCH CIRCUIT FAILURE (Continued)

TEST CONDITIONS	TEST DETAILS/RESULTS/ACTIONS
Z4 CHECK FOR A SHORTED DRIVER SAFETY BELT SWITCH	
1 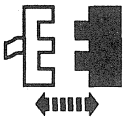 Driver Safety Belt Buckle Switch C316 2 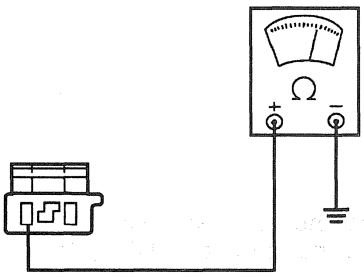 AK1266-A	2 Connect an ohmmeter between driver safety belt switch C316, circuit 875 (BK/LB), and ground. • Is the resistance reading 5 ohms or less? → **Yes** GO to **Z5**. → **No** REPAIR circuit 875 (BK/LB). RETEST the system.
Z5 CHECK CIRCUIT 85 (BR/LB) FOR SHORT TO B+	
1 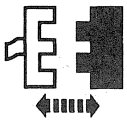 DSM C311 2 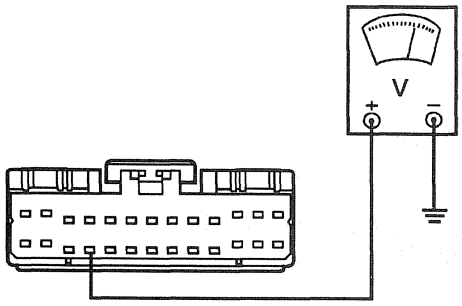 AK1267-A	2 Connect a voltmeter to DSM C311-17, circuit 85 (BR/LB). • Is the voltage reading 0 volts? → **Yes** GO to **Z6**. → **No** REPAIR circuit 85 (BR/LB). TEST the system for normal operation.

Official Licensed Product
Ford Motor Company

(Continued)

DIAGNOSIS AND TESTING (Continued)

PINPOINT TEST Z: DTC B1462: SEAT BELT SWITCH CIRCUIT FAILURE (Continued)

TEST CONDITIONS	TEST DETAILS/RESULTS/ACTIONS
Z6 CHECK CIRCUIT 85 (BR/LB) FOR OPEN	
1 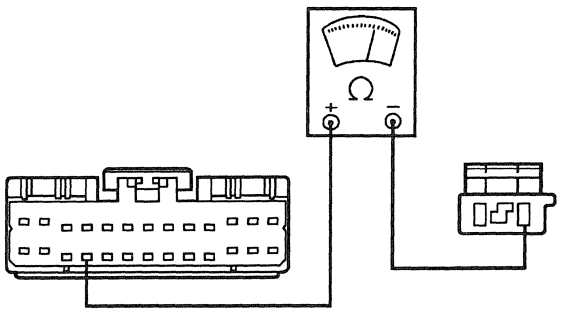 AK1264-A	1 Connect an ohmmeter between DSM C311-17 and driver safety belt switch C316, circuit 85 (BR/LB). • Is the resistance reading 5 ohms or less? → **Yes** GO to **Z7**. → **No** REPAIR circuit 85 (BR/LB). RETEST the system.
Z7 CHECK THE DSM	
1 Driver Safety Belt Switch C311 2 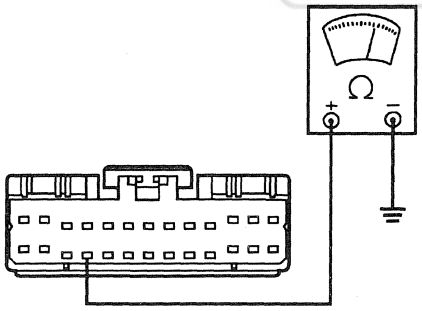 AK1265-A	2 Connect an ohmmeter between DSM C311-17, circuit 85 (BR/LB), and ground. • Is the resistance reading 5 ohms or less? → **Yes** REPLACE the DSM. RETEST the system. → **No** REPLACE the driver safety belt buckle. RETEST the system.

Official Licensed Product
Ford Motor Company

DIAGNOSIS AND TESTING (Continued)

PINPOINT TEST AA: DTC B1676: BATTERY VOLTAGE OUT OF RANGE

TEST CONDITIONS	TEST DETAILS/RESULTS/ACTIONS
AA1 CHECK THE BATTERY VOLTAGE	
1 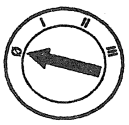 2 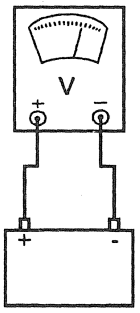 AR0650-A	2 Connect a voltmeter between the positive and negative posts of the battery. • Is the voltage less than 10 volts? → **Yes** REPAIR the battery or charging system. REFER to Section 414-00. → **No** GO to **AA2.**
AA2 CHECK THE CHARGING SYSTEM	
1 2 3 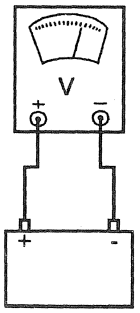 AR0650-A	2 Increase the engine speed to 2000 RPM. 3 Connect a voltmeter between the positive and negative posts of the battery. • Is the voltage over 16 volts? → **Yes** REPAIR the battery or charging system. REFER to Section 414-00. → **No** GO to **AA3.**

Ford Motor Company

(Continued)

DIAGNOSIS AND TESTING (Continued)

PINPOINT TEST AA: DTC B1676: BATTERY VOLTAGE OUT OF RANGE (Continued)

TEST CONDITIONS	TEST DETAILS/RESULTS/ACTIONS
AA3 CHECK THE GROUNDS	
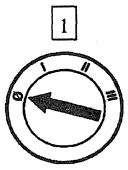 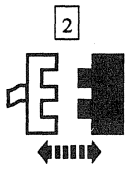 Message Center Indicator Module C208 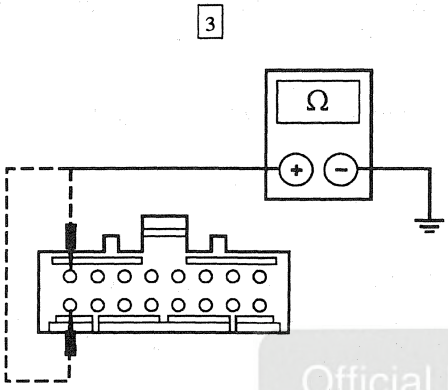 GK5335-A	3 Connect an ohmmeter between message center indicator module C208-36, circuit 57 (BK), and ground; then between message center indicator module C208-28, circuit 875 (BK/LB), and ground. • Are both readings 5 ohms or less? → **Yes** The system is operating properly. CHECK the message center indicator module connector C208 for loose, corroded or pushed-out terminals. CLEAR DTCs. CYCLE the ignition switch. RETRIEVE message center indicator module continuous and Self-Test DTCs. If DTC B1676 is retrieved, REPLACE the message center indicator module. CYCLE the ignition switch. RETRIEVE message center indicator module continuous DTCs and PERFORM the Message Center Indicator Module On-Board Diagnostic Test. If no DTCs are retrieved, CHECK the system for proper operation. → **No** REPAIR circuit 57 (BK) or circuit 875 (BK/LB). CYCLE the ignition switch. RETRIEVE message center indicator module continuous DTCs and PERFORM the Message Center Indicator Module On-Board Diagnostic Test. If no DTCs are retrieved, CHECK the system for proper operation.

Official Licensed Product
Ford Motor Company

DIAGNOSIS AND TESTING (Continued)

PINPOINT TEST AB: DTC B1205 AND DTC B1209 EIC SWITCH FAILURE

TEST CONDITIONS	TEST DETAILS/RESULTS/ACTIONS
AB1 CHECK CIRCUIT 875 (BK/LB) FOR AN OPEN	
1 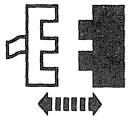 Message Center Switch Module C202 2 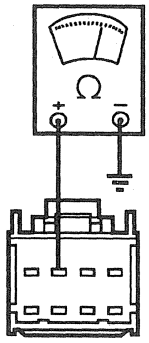 AK1203-A	2 Connect an ohmmeter between message center switch module C202-2, circuit 875 (BK/LB), and ground. • Is the resistance 5 ohms or less? → **Yes** GO to **AB2**. → **No** REPAIR circuit 875 (BK/LB). CYCLE the ignition switch. RETRIEVE message center indicator module continuous DTCs and PERFORM the Message Center Indicator Module On-Board Diagnostic Test. If no DTCs are retrieved, CHECK the system for proper operation.

Official Licensed Ford Motor Company

(Continued)

DIAGNOSIS AND TESTING (Continued)

PINPOINT TEST AB: DTC B1205 AND DTC B1209 EIC SWITCH FAILURE (Continued)

TEST CONDITIONS	TEST DETAILS/RESULTS/ACTIONS
AB2 CHECK FOR A CIRCUIT-TO-CIRCUIT SHORT	
1 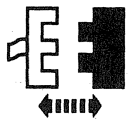 Message Center Indicator Module C246 2 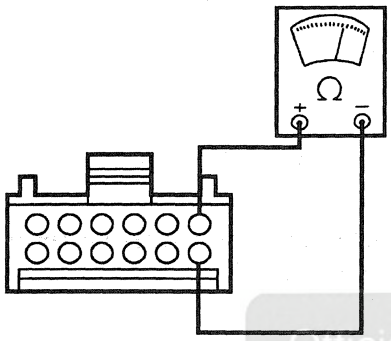 AK1204-A	2 Connect an ohmmeter between message center indicator module C246-7, circuit 704 (DG/LG), and pin C246-1, circuit 715 (LG). • Is the resistance infinite? → **Yes** REPLACE the message center switch module. CYCLE the ignition switch. RETRIEVE message center indicator module continuous DTCs and PERFORM the Message Center Indicator Module On-Board Diagnostic Test. If no DTCs are retrieved, CHECK the system for proper operation. → **No** REPAIR the circuit-to-circuit short. CYCLE the ignition switch. RETRIEVE message center indicator module continuous DTCs and PERFORM the Message Center Indicator Module On-Board Diagnostic Test. If no DTCs are retrieved, CHECK the system for proper operation.

Official Licensed Product
Ford Motor Company

REMOVAL AND INSTALLATION

Message Center Assembly — Message Center Indicator

Removal

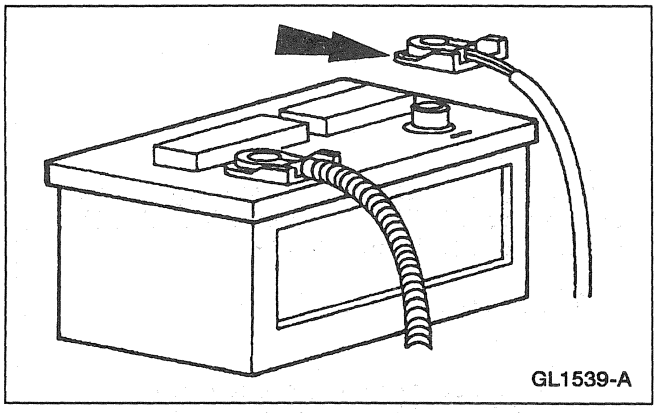
GL1539-A

1. Disconnect the battery ground cable.

2. Remove the instrument panel cluster finish panel; refer to Section 501-12.

3. Remove the message center switch module (10D996); refer to Message Center Switch Module.

Official Licensed Product
Ford Motor Company

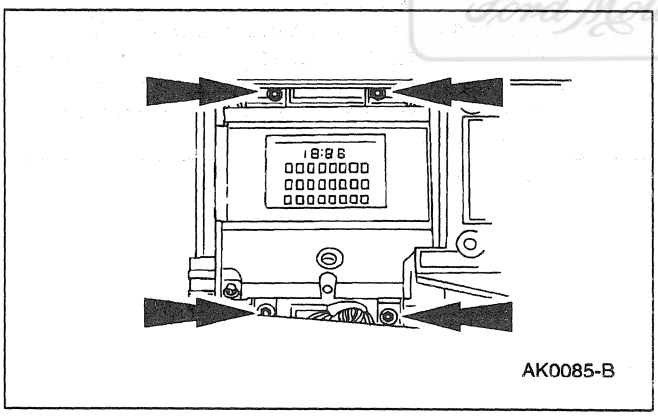
AK0085-B

4. Remove the retaining screws from the message center indicator module.

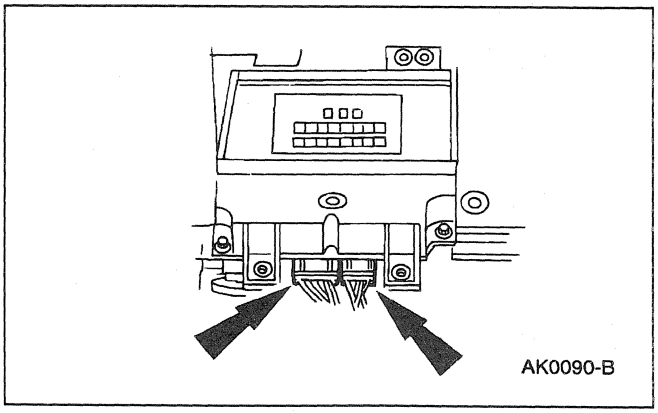
AK0090-B

5. Disconnect the electrical connectors and remove the message center indicator module.

REMOVAL AND INSTALLATION (Continued)

Installation

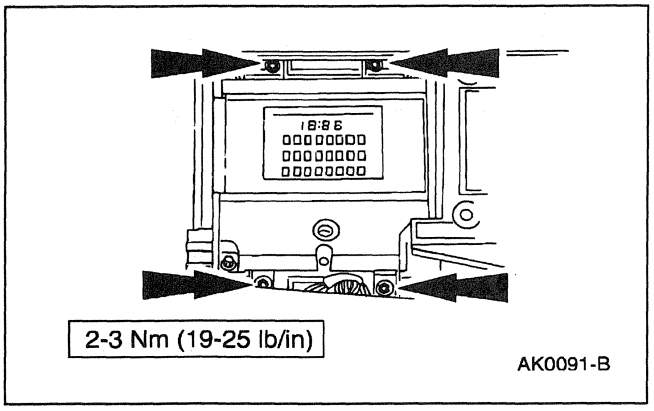

1. **NOTE:** When the battery (10655) is disconnected and reconnected, some abnormal drive symptoms may occur while the vehicle relearns its adaptive strategy. The vehicle may need to be driven 16 km (10 mi) or more to relearn the strategy.

   To install, reverse the removal procedure.

Message Center Assembly — Indicator Lamp Module Bulb

Removal

Official Licensed Product
Ford Motor Company

1. Remove the message center switch module (10D996); refer toMessage Center Switch Module.

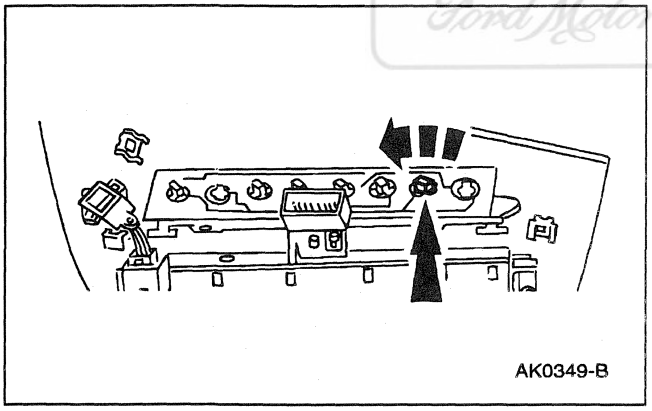

2. **WARNING: ILLUMINATION BULBS ARE PRESSURIZED AND MAY SHATTER IF IMPROPERLY HANDLED. WEAR EYE PROTECTION WHEN REPLACING THE ILLUMINATION BULBS.**

   Turn the indicator bulb retainer counterclockwise and remove the bulb.

Installation

1. To install, reverse the removal procedure.

REMOVAL AND INSTALLATION (Continued)

Message Center Switch Module

Removal

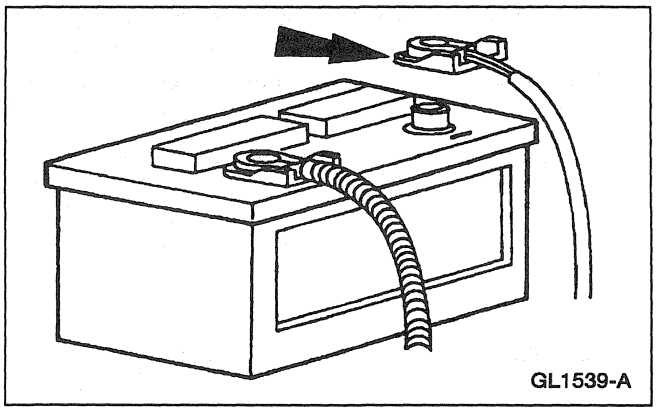
GL1539-A

1. Disconnect the battery ground cable.

2. Remove the instrument panel cluster finish panel; refer to Section 501-12.

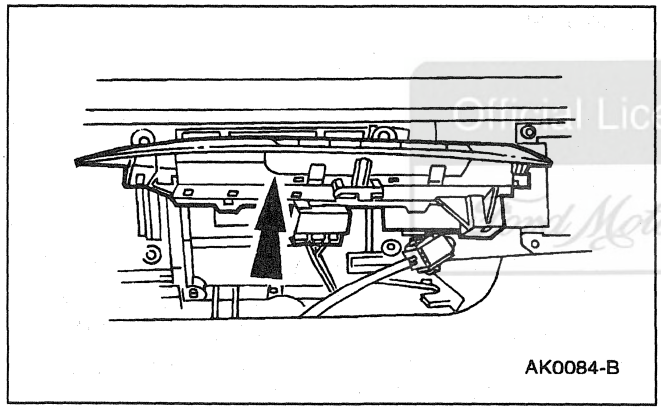
AK0084-B

3. Carefully pry the message center switch module (10D996) from the instrument panel.

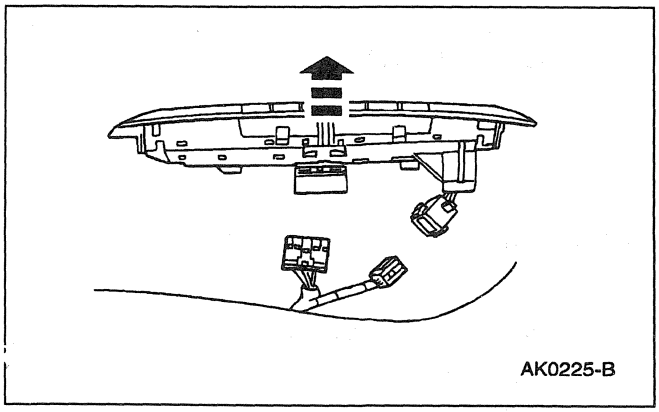
AK0225-B

4. Disconnect the message center switch module, the automatic temperature control sensor and hose and remove the message center switch module.

Official Licensed Product
Ford Motor Company

REMOVAL AND INSTALLATION (Continued)

Installation

1. **NOTE:** When the battery (10655) is disconnected and reconnected, some abnormal drive symptoms may occur while the vehicle relearns its adaptive strategy. The vehicle may need to be driven 16 km (10 mi) or more to relearn the strategy.

   To install, reverse the removal procedure.

SPECIFICATIONS

Torque Specifications

Description	Nm	Lb/In
Message Center Indicator Module Screws	2-3	19-25

Official Licensed Product
Ford Motor Company

SECTION 413-09 Gauges and Warning Devices

VEHICLE APPLICATION: Mark VIII

SUBJECT **PAGE**

DESCRIPTION AND OPERATION
Warning Devices....413-09-2
DIAGNOSIS AND TESTING
Warning Devices....413-09-3
Inspection and Verification....413-09-3
DDM Active Command Index....413-09-8
DDM Diagnostic Trouble Code (DTC) Index....413-09-7
DDM Parameter Identification (PID) Index....413-09-8
DSM Active Command Index....413-09-11
DSM Diagnostic Trouble Code (DTC) Index....413-09-8
DSM Parameter Identification (PID) Index....413-09-10
SCIL Module Active Command Index....413-09-6
SCIL Module Diagnostic Trouble Code (DTC) Index....413-09-4
SCIL Module Parameter Identification (PID) Index....413-09-5
Pinpoint Tests....413-09-12
Symptom Chart....413-09-11
REMOVAL AND INSTALLATION
Module — Steering Column/Ignition/Lighting (SCIL)....413-09-26
Switch — Driver Door Ajar....413-09-26
Switch — Key In Ignition Warning....413-09-26

Official Licensed Product
Ford Motor Company

DESCRIPTION AND OPERATION

Warning Devices

Warning Devices

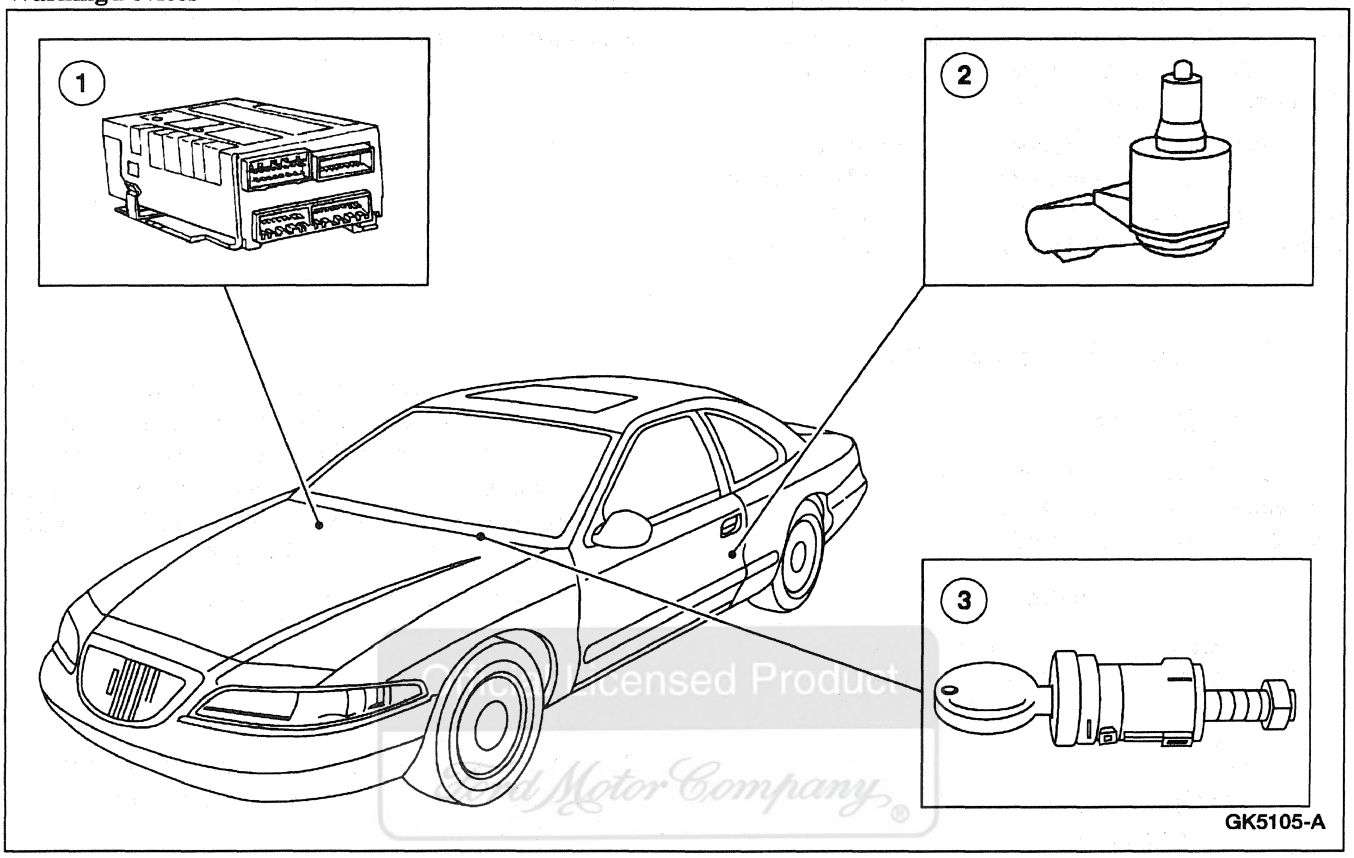

Item	Part Number	Description
1	—	Steering Column/Ignition/Lighting (SCIL) Module
2	—	Driver Door Ajar Switch
3	—	Ignition Lock Cylinder

The steering column/ignition/lighting (SCIL) module controls the safety belt warning chime, the key-in-ignition warning chime, the door ajar warning chime, the luggage compartment door ajar chime and the headlamps on warning chime. Each tone is emitted into the interior of the vehicle from the SCIL module.

The safety belt warning chime warns that the safety belt is not fastened. The safety belt warning chime will sound when the driver safety belt is not fastened and the ignition switch is turned from the OFF/LOCK or ACC to the RUN or START position.

The safety belt warning chime will stop sounding when the safety belt is fastened, the ignition switch is switched from the RUN or START position to the OFF/LOCK or ACC position or after the chime has sounded for six seconds.

The key-in-ignition warning chime will sound continuously when the ignition key is in the ignition lock cylinder with the key OFF and the driver door open. The chime will continue to sound until the key is removed from the ignition lock cylinder or the driver door is closed.

DESCRIPTION AND OPERATION (Continued)

The headlamps on warning chime will sound continuously when the headlamp switch is in the PARK or HEAD position, the driver door is opened and the key is not in the ignition lock cylinder. The headlamp warning chime will continue to chime until the headlamp switch is in the OFF position or the driver door is closed.

The door ajar warning chime will sound one time, if the key is in the ignition switch lock cylinder and any door is opened. In addition to the chime, a message appears on the hybrid electronic cluster (HEC).

The luggage compartment door ajar warning chime will sound one time, if the key is in the ignition switch lock cylinder and the luggage compartment door is ajar. In addition to the chime, a trunk ajar message appears on the HEC.

DIAGNOSIS AND TESTING

Warning Devices

Refer to Electrical and Vacuum Troubleshooting Manual, Cell 58, Lighting Control Module for schematic and connector information.

Special Tool(s)

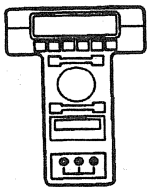 ST1217-A	New Generation Star (NGS) Tester or equivalent 418-F048 (007-00500)
ST1137-A	73 Digital Multimeter or equivalent 105-R0051

Inspection and Verification

1. Verify the customer concern.
2. Visually inspect for obvious signs of mechanical and electrical damage. Refer to the following chart:

Visual Inspection Chart

Mechanical	Electrical
• Door ajar switch(es)	• Fuse Junction Panel Fuse 4 (10A), 5 (10A) • Power Distribution Box Fuse 6 (60A) • Circuitry • Damaged or corroded connectors

3. If the concern remains after the inspection connect the New Generation STAR (NGS) Tester to the data link connector (DLC) located beneath the instrument panel and select the vehicle to be tested from the NGS Tester menu. If the NGS Tester does not communicate with the vehicle:
   - check that the program card is properly installed.
   - check the connections to the vehicle.
   - check the ignition switch position.
4. If the NGS still does not communicate with the vehicle, refer to the New Generation STAR Tester manual.
5. Perform the DATA LINK DIAGNOSTIC TEST. If the NGS responds with:
   - CKT914, CKT915 or CKT70 = ALL ECUS NO RESP/NOT EQUIP, refer to Section 418-00.
   - NO RESP/NOT EQUIP for SCIL module, go to Pinpoint Test A.
   - NO RESP/NOT EQUIP for DDM, go to Pinpoint Test H.
   - NO RESP/NOT EQUIP for DSM, go to Pinpoint Test J.
   - SYSTEM PASSED, retrieve and record the continuous diagnostic trouble codes (DTCs), erase the continuous DTCs and perform self test diagnostics for the SCIL module, DSM, and the DDM.
6. If the DTCs retrieved are related to the concern, go to SCIL Module Diagnostic Trouble Code (DTC) Index to continue diagnostics, DSM Diagnostic Trouble Code (DTC) Index, and/or DDM Diagnostic Trouble Code (DTC) Index.

Ford Motor Company Official Licensed Product

DIAGNOSIS AND TESTING (Continued)

7. If no DTCs related to the concern are retrieved, proceed to Symptom Chart.

SCIL Module Diagnostic Trouble Code (DTC) Index

SCIL Module Diagnostic Trouble Code (DTC) Index

DTC	Description	DTC Caused By	Action
C1446	Brake Switch Circuit Failure	SCIL	REFER to Section 206-05.
B1246	Panel Dim Potentiometer Switch Circuit Failure	SCIL	REFER to Section 417-02.
B1312	Lamp Headlamp Input Circuit Short to Battery	SCIL	REFER to Section 417-01.
B1334	Luggage Compartment Door Ajar Circuit Short to Ground	SCIL	REFER to Section 417-02.
B1342	ECU Defective	SCIL	CLEAR the DTCs. RETRIEVE the DTCs. If DTC B1342 is retrieved, REPLACE the SCIL module; REFER to Section 419-10. TEST the system for normal operation.
B1353	Ignition Key-In Circuit Open	SCIL	GO to Pinpoint Test C.
B1360	Ignition RUN/ACC Circuit Open	SCIL	REFER to Section 211-05.
B1364	Ignition Start Circuit Open	SCIL	REFER to Section 211-05.
B1446	Wiper Park Sense Circuit Failure	SCIL	REFER to Section 417-01.
B1485	Brake Pedal Input Short to Battery	SCIL	REFER to Section 417-01.
B1509	Flash-to-Pass Switch Circuit Short to Battery	SCIL	REFER to Section 417-01.
B1522	Hood Switch Circuit Short to Ground	SCIL	REFER to Section 419-01A.
B1562	Door Lock Cylinder Circuit Short to Ground	SCIL	REFER to Section 419-01A.
B1566	Door Ajar Circuit Short to Ground	SCIL	REFER to Section 417-02.
B1600	PATS Ignition Key Transponder Signal Is Not Received	SCIL	REFER to Section 419-01B.
B1601	PATS Received Incorrect Key Code From Ignition Key Transponder	SCIL	REFER to Section 419-01B.
B1676	Battery Voltage Out of Range	SCIL	REFER to Section 414-00.
B1682	PATS Is Disabled (Check Link Between PATS and Transponder)	SCIL	REFER to Section 419-01B.
B1687	Dome Lamp Input Circuit Short to Battery	SCIL	REFER to Section 417-02.
B1689	Autolamp Delay Circuit Failure	SCIL	REFER to Section 417-01.
B1796	Lamp Headlamp Low Beam Circuit Short to Battery	SCIL	REFER to Section 417-01.
B1875	Turn Signal/Hazard Switch Signal Circuit Failure	SCIL	REFER to Section 417-01.
B1980	Bulb Outage Condition Detected	SCIL	REFER to Section 417-01.
B2328	Steering Column Reach Feedback Potentiometer Circuit Failure	SCIL	REFER to Section 211-05.
B2332	Steering Column Tilt Feedback Potentiometer Circuit Failure	SCIL	REFER to Section 211-05.
B2351	Steering Column Switch Signal Circuit Failure	SCIL	REFER to Section 211-05.
U1027	SCP Invalid or Missing Data for Engine RPM	PCM	PERFORM the PCM Self-Test.

(Continued)

Official Licensed Product

DIAGNOSIS AND TESTING (Continued)

SCIL Module Diagnostic Trouble Code (DTC) Index

DTC	Description	DTC Caused By	Action
U1041	SCP Invalid or Missing Data for Vehicle Speed	ABS	PERFORM the ABS Self-Test.
U1057	SCP Invalid or Missing Data for Vehicle Configuration	SCIL	PERFORM the SCIL Self-Test.
U1059	SCP Invalid or Missing Data for Transmission/Transaxle/PRNDL	PCM	PERFORM the PCM Self-Test.
U1123	SCP Invalid or Missing Data for Odometer	ABS	PERFORM the ABS Self-Test.
U1147	SCP Invalid or Missing Data for Vehicle Security	PCM	PERFORM the PCM Self-Test.
U1180	SCP Invalid or Missing Data for Personalization (Memory) Features	DDM	PERFORM the DDM Self-Test.
U1181	SCP Invalid or Missing Data for Personalization (Memory) Features	DDM	PERFORM the DDM Self-Test.
U1197	SCP Invalid or Missing Data for Door Locks	DDM	PERFORM the DDM Self-Test.
U1198	SCP Invalid or Missing Data for External Access (Doors)	DDM	PERFORM the DDM Self-Test.
U1199	SCP Invalid or Missing Data for External Access (Doors)	DDM	PERFORM the DDM Self-Test.
U1211	SCP Invalid or Missing Data for Restraints	DSM	PERFORM the DSM Self-Test.
U1222	SCP Invalid or Missing Data for Interior Lamps	DDM	PERFORM the DDM Self-Test.

Official Licensed Product
Ford Motor Company

SCIL Module Parameter Identification (PID) Index

SCIL Module Parameter Identification (PID) Index

Display	Description	Expected Values
CCNTSCI	Number of Continuous DTCs on SCIL	one count per bit
BOO__SCI	Brake Switch Input	ON, OFF
PARK__BRK	Parking Brake Switch Input	ON, OFF
TILT	Steering Column Tilt Switch	SHORT, UP, DOWN, OFF
TELESCP	Steering Column Telescope Switch	SHORT, IN, OUT, OFF
TILTPOS	Tilt Position Sensor	SENSED, notSEN
TELEPOS	Telescope Position Sensor	SENSED, notSEN
TURN__SW	Left and Right Turn Signal Switch	OFF, LEFT, RIGHT, SHORT
LBEAMSW	Low Beam Switch	ON, OFF
HBEAMSW	High Beam Switch	ON, OFF
PARK__SW	Parking Switch	ON, OFF
LIGHTSN	Ambient Light	DAY, NIGHT
FLASH	Flash to Pass Switch	ON, OFF
FTURN__L	Left and Right Front Turn Lamp	R__OPEN, L__OPEN, L/R__OPEN OK
RTURN__L	Left and Right Rear Turn Lamp	R__OPEN, L__OPEN, L/R__OPEN OK
TAILLMP	Left and Right Tail Lamp	OPEN, OK
LOWBEAM	Low Beam Lamp	R__OPEN, L__OPEN, L/R__OPEN OK
AUTOLMP	Autolamp Switch	ON, OFF

(Continued)

DIAGNOSIS AND TESTING (Continued)

SCIL Module Parameter Identification (PID) Index

Display	Description	Expected Values
ALP__IMP	Autolamp Analog Input	0-100%
DOMESW	Dome Lamp Switch	ACTIVE, notACT
PANLDIM	Panel Dim Intensity Switch	0-100%
HOOD__SW	Hood Ajar Switch	AJAR, CLOSED
DECKLID	Deck Lid Ajar Switch	AJAR, CLOSED
P__DR__SW	Passenger Door Ajar Switch	AJAR, CLOSED
IGN__KEY	Ignition Key In/Out	IN, OUT
IGN__SCI	Ignition Switch	START, RUN, OFF, ACCY
WPPRKSW	Windshield Wiper Park Sense	notPRK, PARKED
NUMKEYS	Number of Ignition Key Codes Supported	BCD (valid range 0-8)
DRLKCYL	Door Lock Cylinder	ON, OFF
ENABLE	PATS System Status	ON, OFF

SCIL Module Active Command Index

SCIL Module Active Command Index

Active Command	Display	Action
PID LATCH	PID LATCH	ON, OFF
ONE TOUCH WINDOW DWN & ACCY DELAY	ACCY RLY	ON, OFF
WARNING LAMPS AND CHIME	CHIME	ON, OFF
WARNING LAMPS AND CHIME	ANTI-THEFT	ON, OFF
WARNING LAMPS AND CHIME	AUTOLMP	ON, OFF
WARNING LAMPS AND CHIME	HIGH BEAM	ON, OFF
INTERIOR COURTESY LAMPS	INT LAMPS	ON, OFF
INTERIOR COURTESY LAMPS	MIRRORLMP	ON, OFF
DECKLID RELEASE	RELEASE	ON, OFF
TURN SIGNAL AND MARKER LAMPS	LF TURN	ON, OFF
TURN SIGNAL AND MARKER LAMPS	RF TURN	ON, OFF
TURN SIGNAL AND MARKER LAMPS	LR TURN	ON, OFF
TURN SIGNAL AND MARKER LAMPS	RR TURN	ON, OFF
TURN SIGNAL AND MARKER LAMPS	PARKLAMPS	ON, OFF
HEADLAMP CONTROL	LEFT LOW	ON, OFF
HEADLAMP CONTROL	RIGHT LOW	ON, OFF
HEADLAMP CONTROl	HIGH BEAM	ON, OFF
HEADLAMP CONTROL	DRUN LAMP	ON, OFF
HEADLAMP CONTROL	LF CORNER	ON, OFF
HEADLAMP CONTROL	RF CORNER	ON, OFF
HORN CONTROL	HORN	ON, OFF
BACKLIGHTING INTENSITY	INTENSITY	0%-100%
COURTESY LAMP INTENSITY	INTENSITY	0%-100%
DOOR AJAR SIGNAL	DOOR AJAR	ON, OFF
TRANSMIT SIGNAL COMMAND	TRANSMIT	ON, OFF
BRAKE SYSTEM	BRK/SHIFT	ON, OFF

(Continued)

Official Licensed Product

DIAGNOSIS AND TESTING (Continued)

SCIL Module Active Command Index

Active Command	Display	Action
BRAKE SYSTEM	PARK BRK	ON, OFF
STEERING COLUMN CONTROL	TILT UP	ONE SECOND TIME OUT
STEERING COLUMN CONTROL	TILT DOWN	ONE SECOND TIME OUT
STEERING COLUMN CONTROL	TELSCP IN	ONE SECOND TIME OUT
STEERING COLUMN CONTROL	TELSCPOUT	ONE SECOND TIME OUT
KEYCODE ERASE TIME SET	MINUTES	8-63 MINUTES

DDM Diagnostic Trouble Code (DTC) Index

DDM Diagnostic Trouble Code (DTC) Index

DTC	Description	DTC caused by	Action
B1322	Door Ajar LF Circuit Short to Ground	DDM	REFER to Section 417-02.
B1342	ECU Is Defective	DDM	CLEAR the DTCs. RETRIEVE the DTCs. If DTC B1342 is retrieved, REPLACE the DDM; REFER to Section 419-10. TEST the system for normal operation.
B1396	Power Door Lock Circuit Short to Battery	DDM	REFER to Section 501-14B.
B1525	Keyless Entry Circuit Short to Battery	DDM	REFER to Section 501-14B.
B1529	Memory Set Switch Circuit Short to Battery	DDM	REFER to Section 501-09.
B1539	Mirror Driver Switch Assembly Circuit Failure	DDM	REFER to Section 501-09.
B1549	Power Window Master Circuit Short to Battery	DDM	REFER to Section 501-11.
B1554	Luggage Compartment Door Release Circuit Short to Ground	DDM	REFER to Section 501-14A.
B1676	Battery Voltage Out of Range	DDM	REFER to Section 414-00.
U1041	SCP Invalid or Missing Data for Vehicle Speed	ABS	PERFORM the ABS Self-Test.
U1059	SCP Invalid or Missing Data for Transmission/Transaxle/ PRDNL	PCM	PERFORM the PCM Self-Test.
U1117	SCP Invalid or Missing Data for Electrical Energy Management	SCIL	PERFORM the SCIL Self-Test.
U1135	SCP Invalid or Missing Data for Ignition Switch/Starter	SCIL	PERFORM the SCIL Self-Test.
U1196	SCP Invalid or Missing Data for Door Locks	SCIL	PERFORM the DDM Self-Test.
U1199	SCP Invalid or Missing Data for External Access (Doors)	SCIL	PERFORM the SCIL Self-Test. PERFORM the DDM Self-Test.

Special Licensed Product Chrysler Company

DIAGNOSIS AND TESTING (Continued)

DDM Parameter Identification (PID) Index

DDM Parameter Identification (PID) Index

PID	Description	Expected Values
CCNT__DD	Number of Continuous DTCs on DDM	one count per bit
KEYCODE	Keyless Entry Factory Code	5 digit no. encoded, INVLD
D__DR__DD	Driver Door Ajar Switch	AJAR, CLOSED
DLIDRLS	Deck Lid Release Switch	ON, OFF
D__PW__SW	Driver Power Window Switch	UP, DOWN, OFF, SHORT
OTD__SW	One Touch Down Switch	OFF, DOWN
DR__LOCK	Door Lock Output State	SHORT, LOCK, UNLOCK, OFF
D__WINDO	Driver Front Window	DOWN, notDWN
MEM__OFF	Memory Set Switch	ACTIVE, notACT
MEM2__SW	Memory Recall Switch #2	OFF, ON
MEM1__SW	Memory Recall Switch #1	OFF, ON
MIR__SEL	Power Mirror Select Switch	PSSNGR, DRIVER
MIRV__SW	Power Mirror Position Switch-Vertical	SHORT, DOWN, UP, OFF
MIRH__SW	Power Mirror Position Switch - Horizontal	SHORT, RIGHT, LEFT, OFF
KEY__PAD	Keyless Entry Switch	1, 3, 5, 7, 9

DDM Active Command Index

Official Licensed Product
Ford Motor Company

DDM Active Command Index

Active Command	Display	Action
PID LATCH	PID LATCH	ON, OFF
MEMORY SEAT LED CONTROL	LED STATE	ON, OFF
KEYPAD BACKLIGHTING	LIGHT	ON, OFF
FRONT WINDOW CONTROL	DD DOWN	ON, OFF
DOOR LOCK CONTROL	LOCK	ON, OFF
	UNLOCK	ON, OFF
	DD UNLOCK	ON, OFF

DSM Diagnostic Trouble Code (DTC) Index

DSM Diagnostic Trouble Code (DTC) Index

DTC	Description	DTC Caused By	Action
B1342	ECU Is Defective	DSM	CLEAR the DTCs. RETRIEVE the DTCs. If DTC B1342 is retrieved, REPLACE the DSM; REFER to Section 419-10. TEST the system for normal operation.
B1462	Drivers Safety Belt Switch Circuit Failure	DSM	GO to Pinpoint Test B.

(Continued)

DIAGNOSIS AND TESTING (Continued)

DSM Diagnostic Trouble Code (DTC) Index

DTC	Description	DTC Caused By	Action
B1597	Drivers Seat Seatback Autoglide Forward Switch Circuit Short To Ground	DSM	REFER to Section 501-10.
B1676	Battery Voltage Out Of Range	DSM	REFER to Section 414-00.
B1703	Seat Driver Recline Forward Switch Circuit Short To Battery	DSM	REFER to Section 501-10.
B1707	Seat Driver Recline Rearward Switch Circuit Short To Battery	DSM	REFER to Section 501-10.
B1711	Seat Driver Front Up Switch Circuit Short To Battery	DSM	REFER to Section 501-10.
B1715	Seat Driver Front Down Switch Circuit Short To Battery	DSM	REFER to Section 501-10.
B1719	Seat Driver Forward Switch Circuit Short To Battery	DSM	REFER to Section 501-10.
B1723	Seat Driver Rearward Switch Circuit Short To Battery	DSM	REFER to Section 501-10.
B1727	Seat Driver Rear Up Switch Circuit Short To Battery	DSM	REFER to Section 501-10.
B1731	Seat Driver Rear Down Switch Circuit Short To Battery	DSM	REFER to Section 501-10.
B1950	Seat Rear Up/Down Potentiometer Feedback Circuit Failure	DSM	REFER to Section 501-10.
B1954	Seat Front Up/Down Potentiometer Feedback Circuit Failure	DSM	REFER to Section 501-10.
B1958	Seat Recline Forward/Backward Potentiometer Feedback Circuit Failure	DSM	REFER to Section 501-10.
B1962	Seat Horizontal Forward/Backward Potentiometer Feedback Circuit Failure	DSM	REFER to Section 501-10.
B1986	Driver Seat Seatback Autoglide Rearward Switch Circuit Failure	DSM	REFER to Section 501-10.
B2312	Mirror Passenger Horizontal Feedback Potentiometer Circuit Failure	DSM	REFER to Section 501-09.
B2316	Mirror Passenger Vertical Feedback Potentiometer Circuit Failure	DSM	REFER to Section 501-09.
B2320	Mirror Driver Horizontal Feedback Potentiometer Circuit Failure	DSM	REFER to Section 501-09.

(Continued)

DIAGNOSIS AND TESTING (Continued)

DSM Diagnostic Trouble Code (DTC) Index

DTC	Description	DTC Caused By	Action
B2324	Mirror Driver Vertical Feedback Potentiometer Circuit Failure	DSM	REFER to Section 501-09.
U1059	SCP Invalid Or Missing Data For Transmission/ Transaxle/PRNDL	PCM	PERFORM the PCM Self-Test.
U1117	SCP Invalid Or Missing Data For Electrical Energy Management	SCIL	PERFORM the SCIL Self-Test.
U1135	SCP Invalid Or Missing Data For Ignition Switch/Starter	SCIL	PERFORM the SCIL Self-Test.
U1180	SCP Invalid Or Missing Data For Personalization (Memory) Features	DDM	PERFORM the DDM Self-Test.
U1181	SCP Invalid Or Missing Data For Personalization (Memory) Features	DDM	PERFORM the DDM Self-Test.
U1194	SCP Invalid Or Missing Data For Mirrors	DDM	PERFORM the DDM Self-Test.
U1199	SCP Invalid Or Missing Data For External Access (Doors)	DDM/SCIL	PERFORM the DDM Self-Test. PERFORM the SCIL Self-Test.

Official Licensed Product

DSM Parameter Identification (PID) Index

DSM Parameter Identification (PID) Index

PID	Description	Expected Values
CCNT__DS	Number Of Continuous DTCS On DSM	one count per bit
D__SBELT	Driver Safety Belt	IN, OUT
PMIR__H	Passengers Mirror Horizontal	SENSED, NOTSEN
PMIR__V	Passengers Mirror Vertical	SENSED, NOTSEN
DMIR__H	Drivers Mirror Horizontal	SENSED, NOTSEN
DMIR__V	Drivers Mirror Vertical	SENSED, NOTSEN
SRCL__MT	Drivers Seat Recline Motor	SENSED, NOTSEN
SFWD__MT	Drivers Seat Forward Motor	SENSED, NOTSEN
SREARMT	Drivers Seat Rear Motor	SENSED, NOTSEN
SFNT__MT	Drivers Seat Front Motor	SENSED, NOTSEN
SRCL__SW	Power Seat Switch - Recline	SHORT, RWD, FWD, OFF
SFWD__SW	Power Seat Switch - Forward/Rearward	SHORT, RWD, FWD, OFF
SREARSW	Power Seat Switch - Rear	SHORT, UP, DOWN, OFF
SFNT__SW	Power Seat Switch - Front	SHORT, UP, DOWN, OFF
AGLIDEF	Autoglide Forward Switch	ACTIVE, notACT
AGLIDER	Autoglide Rearward Signal	ACTIVE, notACT

DIAGNOSIS AND TESTING (Continued)

DSM Active Command Index

DSM Active Command Index

Active Command	Display	Action
PID LATCH	PID LATCH	ON, OFF
DRIVER'S SEAT CONTROL	FRONT UP	ON, OFF
	FRONT DWN	ON, OFF
	REAR UP	ON, OFF
	REAR DWN	ON, OFF
	HORZ FWD	ON, OFF
	HORZ BWD	ON, OFF
	RECL FWD	ON, OFF
	RECL BWD	ON, OFF
POWER MIRROR CONTROL	DR UP	ON, OFF
	DR DOWN	ON, OFF
	DR LEFT	ON, OFF
	DR RIGHT	ON, OFF
	PR UP	ON, OFF
	PR DOWN	ON, OFF
	PR LEFT	ON, OFF
	PR RIGHT	ON, OFF

(Continued)

Symptom Chart

Symptom Chart

Condition	Possible Source	Action
• No Communication With The Module — Steering Column/Ignition/Lighting Module	• SCIL module. • Fuse. • Circuitry.	• Go to Pinpoint Test A.
• The Safety Belt Warning Chime Does Not Operate Properly	• LF seat belt switch. • SCIL module. • Circuitry.	• Go to Pinpoint Test B.
• The Key-In-Ignition Chime Does Not Operate Properly	• SCIL module. • Key warning switch. • DDM. • Driver door ajar switch. • Circuitry.	• Go to Pinpoint Test C.
• The Door Ajar Chime Does Not Operate Properly	• SCIL module. • Driver door ajar switch. • Passenger door ajar switches. • Key warning switch. • Circuitry.	• Go to Pinpoint Test D.
• All the Chimes/Buzzers Are Inoperative	• SCIL module.	• REPLACE the SCIL module. REFER to Section 419-10. TEST the system for normal operation.
• The Headlamp On Reminder Chime Does Not Operate Properly	• SCIL module. • Door ajar switches. • Circuitry.	• Go to Pinpoint Test E.
• The Chime Sounds When The Driver Door Is Ajar (No Key In Ignition and Headlamps OFF)	• SCIL module. • Key warning switch. • Circuitry.	• Go to Pinpoint Test F.
• Luggage Compartment Door Ajar Chime Does Not Operate Properly	• SCIL module. • Trunk lid release solenoid. • Circuitry.	• Go to Pinpoint Test G.

Official Licensed Product

DIAGNOSIS AND TESTING (Continued)

Symptom Chart (Continued)

Condition	Possible Source	Action
• No Communication With The Module — Driver Door Module	• DDM. • Fuse. • Circuitry.	• Go to Pinpoint Test H.
• No Communication With The Module — Driver Seat Module	• DSM. • Fuse. • Circuitry.	• REFER to Section 501-10.
• The Warning Chime Sounds Continuously — All Doors Closed, Headlamps Off, And Key Out Of Ignition	• SCIL module.	• REPLACE the SCIL module. REFER to Section 419-10. TEST the system for normal operation.

Pinpoint Tests

PINPOINT TEST A: NO COMMUNICATION WITH THE MODULE — STEERING COLUMN/IGNITION/LIGHTING MODULE

TEST CONDITIONS	TEST DETAILS/RESULTS/ACTIONS
A1 CHECK CIRCUIT 875 (BK/LB) FOR OPEN	
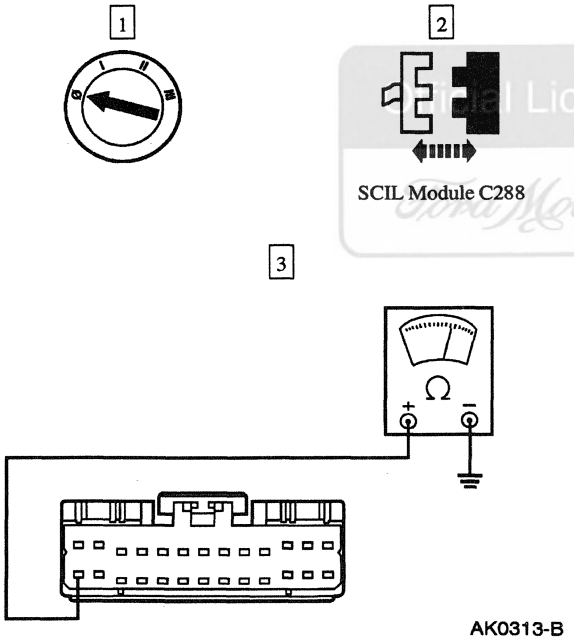	3 Measure the resistance between SCIL module C288-14, circuit 875 (BK/LB), and ground. • Is the resistance less than 5 ohms? → **Yes** GO to **A2.** → **No** REPAIR circuit 875 (BK/LB). TEST the system for normal operation.

Ford Motor Company Licensed Product

(Continued)

DIAGNOSIS AND TESTING (Continued)

PINPOINT TEST A: NO COMMUNICATION WITH THE MODULE — STEERING COLUMN/IGNITION/LIGHTING MODULE (Continued)

TEST CONDITIONS	TEST DETAILS/RESULTS/ACTIONS
A2 CHECK CIRCUIT 57 (BK) FOR OPEN	
1 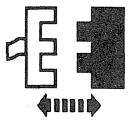 SCIL Module C287 2 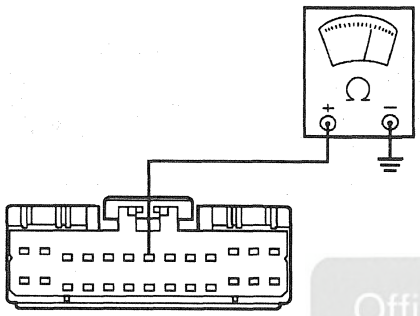 AK0314-B	2 Measure the resistance between SCIL module C287-7, circuit 57 (BK), and ground. • Is the resistance less than 5 ohms? → **Yes** GO to **A3**. → **No** REPAIR circuit 57 (BK). TEST the system for normal operation.
A3 CHECK FOR VOLTAGE TO THE SCIL MODULE	
1 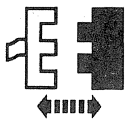 SCIL Module C289 2 3 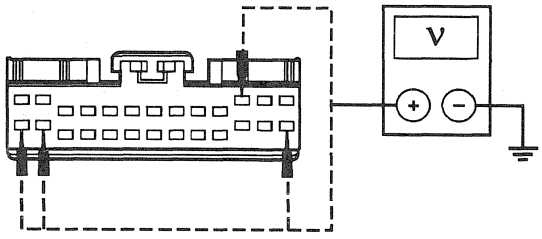 GK4906-A	3 Measure the voltage between SCIL module C287 pins and ground; refer to the following chart: **SCIL Module Connector Pin** / **Circuit** C287-14 — 906 (R/O) C287-26 — 19 (LB/R) C287-15 — 1055 (W/LG) C287-11 — 1056 (DB/LG)

Official Licensed Product
Ford Motor Company

(Continued)

DIAGNOSIS AND TESTING (Continued)

PINPOINT TEST A: NO COMMUNICATION WITH THE MODULE — STEERING COLUMN/IGNITION/LIGHTING MODULE (Continued)

TEST CONDITIONS	TEST DETAILS/RESULTS/ACTIONS
A3 CHECK FOR VOLTAGE TO THE SCIL MODULE (Continued)	
4 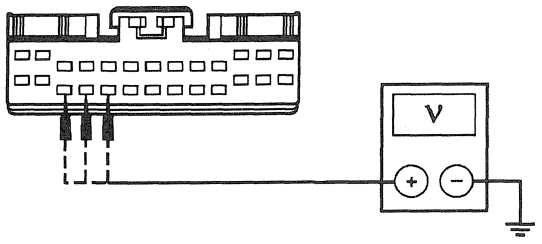 GK6448-A	4 Measure the voltage between the SCIL module C288 pins and ground; refer to the following chart: **SCIL Module Connector Pin** / **Circuit** C288-16 — 251 (BR/O) C288-18 — 158 (BK/PK) C288-17 — 640 (R/Y)
5 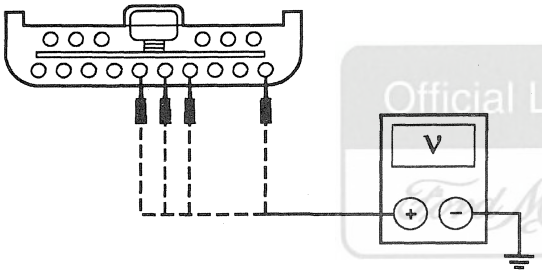 GK6449-A	5 Measure the voltage between the SCIL module C289 pins and ground; refer to the following chart: **SCIL Module Connector Pin** / **Circuit** C289-5 — 1058 (BR/W) C289-6 — 1057 (O/BK) C289-1 — 1046 (T) C289-4 — 906 (R/O) • Are the voltages greater than 10 volts? → **Yes** REFER to Section 418-00. → **No** REPAIR the circuit in question. TEST the system for normal operation.

PINPOINT TEST B: THE SAFETY BELT WARNING CHIME DOES NOT OPERATE PROPERLY

TEST CONDITIONS	TEST DETAILS/RESULTS/ACTIONS
B1 CHECK DSM FOR DTCS	
1 2 3 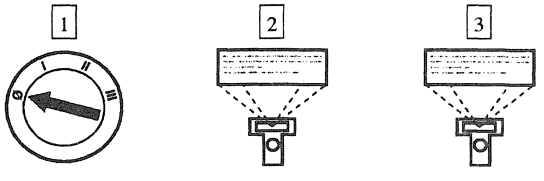 NGS	3 Retrieve and document DSM DTCs.

(Continued)

DIAGNOSIS AND TESTING (Continued)

PINPOINT TEST B: THE SAFETY BELT WARNING CHIME DOES NOT OPERATE PROPERLY (Continued)

TEST CONDITIONS	TEST DETAILS/RESULTS/ACTIONS
B1 CHECK DSM FOR DTCS (Continued)	
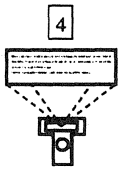 4 Clear Continuous DTCs 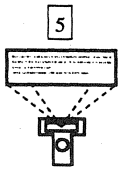 5 DSM On-Demand Self-Test	• Are any DTCs retrieved? → **Yes** If DTC B1462, GO to **B5**. → **No** GO to **B2**.
B2 CHECK DRIVER SAFETY BELT SWITCH OPERATION — MONITOR THE DSM PID D__SBELT	
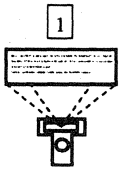 1	1 Monitor the DSM PID D__SBELT, while fastening and unfastening the driver safety belt. • Does the PID indicate IN while fastening the driver safety belt and OUT while unfastening the driver safety belt? → **Yes** REPLACE the DSM. REFER to Section 419-10. TEST the system for normal operation. → **No** If the PID indicates OUT, GO to **B3**. If the PID indicates IN, GO to **B5**.
B3 CHECK CIRCUIT 85 (BR/LB) FOR SHORT TO GROUND	
1 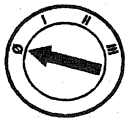 2 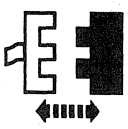 DSM C311	3 Unfasten the driver safety belt.

(Continued)

Official Licensed Ford Motor Company

DIAGNOSIS AND TESTING (Continued)

PINPOINT TEST B: THE SAFETY BELT WARNING CHIME DOES NOT OPERATE PROPERLY (Continued)

TEST CONDITIONS	TEST DETAILS/RESULTS/ACTIONS
B3 CHECK CIRCUIT 85 (BR/LB) FOR SHORT TO GROUND (Continued)	
4 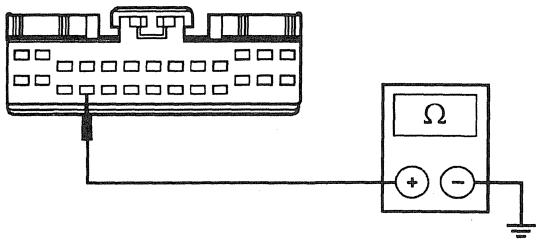 GK6909-A	4 Measure the resistance between DSM C311-17, circuit 85 (BR/LB), and ground. • Is the resistance greater than 10,000 ohms? → **Yes** REPLACE the DSM. REFER to Section 419-10. TEST the system for normal operation. → **No** GO to **B4**.
B4 CHECK CIRCUIT 85 (BR/LB) FOR SHORT TO GROUND — DRIVER SAFETY BELT C316 DISCONNECTED	
1 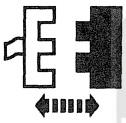 Driver Safety Belt Switch C316 2 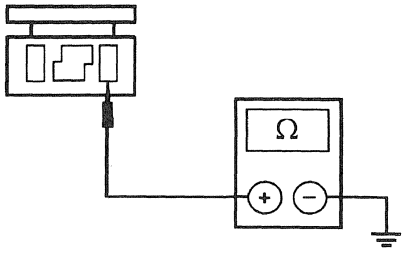 GK6910-A	2 Measure the resistance between driver safety belt switch C316, circuit 85 (BR/LB), and ground. • Is the resistance greater than 10,000 ohms? → **Yes** REPLACE the driver safety belt switch. TEST the system for normal operation. → **No** REPAIR circuit 85 (BR/LB). TEST the system for normal operation.

Official Licensed Product
Ford Motor Company

(Continued)

DIAGNOSIS AND TESTING (Continued)

PINPOINT TEST B: THE SAFETY BELT WARNING CHIME DOES NOT OPERATE PROPERLY (Continued)

TEST CONDITIONS	TEST DETAILS/RESULTS/ACTIONS
B5 CHECK CIRCUIT 85 (BR/LB)	
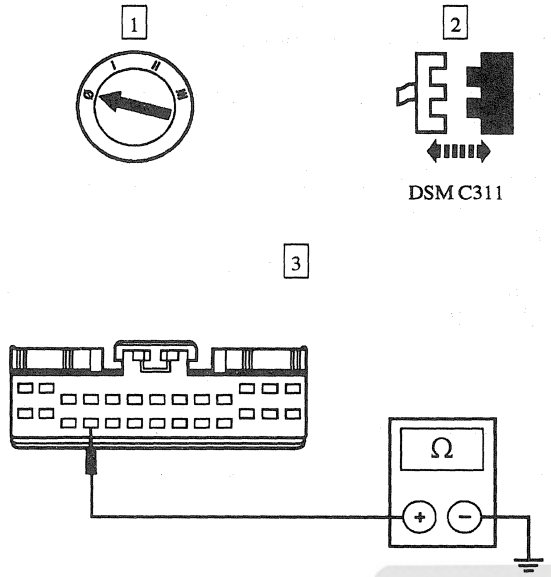	3 Measure the resistance between DSM C311-17, circuit 85 (BR/LB), and ground. • Is the resistance less than 5 ohms? → **Yes** REPLACE the DSM. REFER to Section 419-10. TEST the system for normal operation. → **No** GO to **B6**.
B6 CHECK CIRCUIT 85 (BR/LB) FOR OPEN	
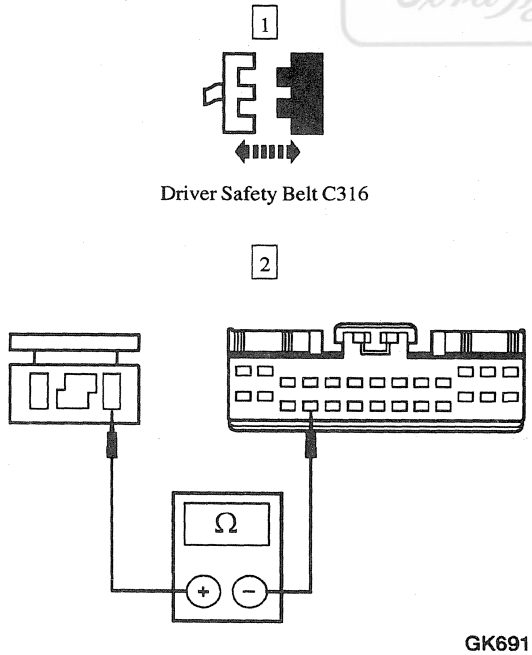	2 Measure the resistance between driver safety belt C316, circuit 85 (BR/LB), and DSM C311-17, circuit 85 (BR/LB). • Is the resistance less than 5 ohms? → **Yes** GO to **B7**. → **No** REPAIR circuit 85 (BR/LB). TEST the system for normal operation.

Official Licensed Product
Ford Motor Company

(Continued)

DIAGNOSIS AND TESTING (Continued)

PINPOINT TEST B: THE SAFETY BELT WARNING CHIME DOES NOT OPERATE PROPERLY (Continued)

TEST CONDITIONS	TEST DETAILS/RESULTS/ACTIONS
B7 CHECK CIRCUIT 875 (BK/LB) FOR OPEN	
1 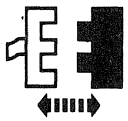 Driver Safety Belt Switch C316 2 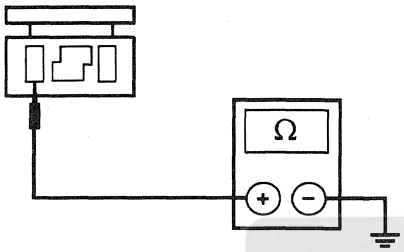 GK6912-A	2 Measure the resistance between driver safety belt switch C316, circuit 875 (BK/LB), and ground. • Is the resistance less than 5 ohms? → **Yes** REPLACE driver safety belt switch. TEST the system for normal operation. → **No** REPAIR circuit 875 (BK/LB). TEST the system for normal operation.

Official Licensed Product

PINPOINT TEST C: THE KEY-IN-IGNITION CHIME DOES NOT OPERATE PROPERLY

TEST CONDITIONS	TEST DETAILS/RESULTS/ACTIONS
C1 CHECK FOR INTERIOR LIGHTS WITH THE DRIVER DOOR OPEN	
1 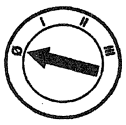	2 Open and close the driver door. • Do the interior lights come on and turn off with the opening and closing of the driver door? → **Yes** GO to **C2.** → **No** REFER to Section 417-02.

(Continued)

DIAGNOSIS AND TESTING (Continued)

PINPOINT TEST C: THE KEY-IN-IGNITION CHIME DOES NOT OPERATE PROPERLY (Continued)

TEST CONDITIONS	TEST DETAILS/RESULTS/ACTIONS
C2 MONITOR THE SCIL PID IGN__KEY	
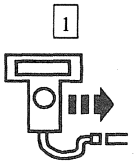 NGS 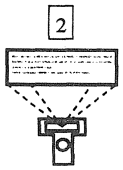 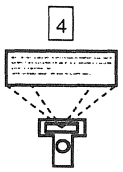	2 Monitor the SCIL PID IGN__KEY. 3 Remove the key from the ignition. 4 Monitor the SCIL PID IGN__KEY. • Does the PID indicate IN and then OUT? → **Yes** REPLACE the SCIL module. REFER to Section 419-10. TEST the system for normal operation. → **No** If the PID indicates IN, GO to **C3**. If the PID indicates OUT, GO to **C4**.
C3 CHECK CIRCUIT 158 (BK/PK) FOR SHORT TO POWER	
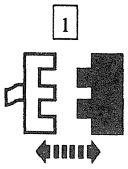 Key-In-Ignition Switch C299 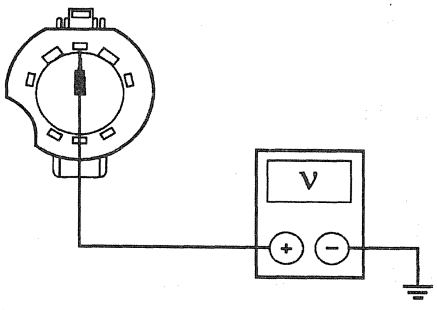 GK7173-A	2 Measure the voltage between key-in-ignition switch C299-8, circuit 158 (BK/PK), and ground. • Is any voltage indicated? → **Yes** REPAIR circuit 158 (BK/PK). TEST the system for normal operation. → **No** REPLACE the key-in-ignition switch. TEST the system for normal operation.

Official Licensed Product Ford Motor Company

(Continued)

DIAGNOSIS AND TESTING (Continued)

PINPOINT TEST C: THE KEY-IN-IGNITION CHIME DOES NOT OPERATE PROPERLY (Continued)

TEST CONDITIONS	TEST DETAILS/RESULTS/ACTIONS
C4 CHECK CIRCUIT 158 (BK/PK) FOR OPEN	
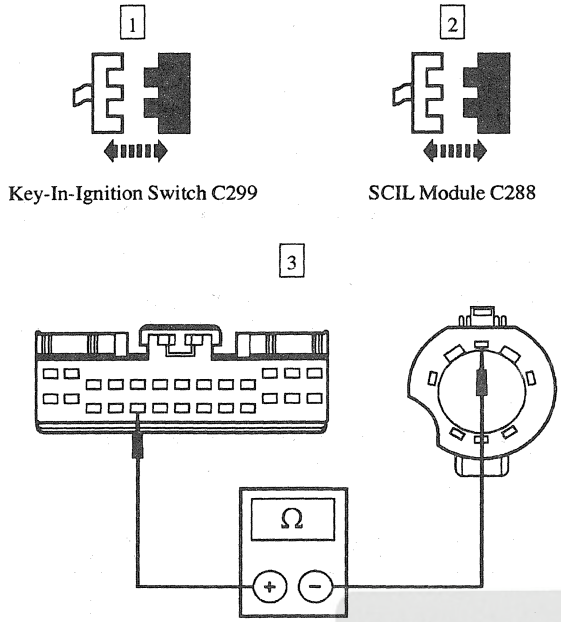	3 Measure the resistance between SCIL module C288-18, circuit 158 (BK/PK), and key-in-ignition switch C299-8, circuit 158 (BK/PK). • Is the resistance less than 5 ohms? → **Yes** REPLACE key-in-ignition switch. TEST the system for normal operation. → **No** REPAIR circuit 158 (BK/PK). TEST the system for normal operation.

Official Licensed Product

PINPOINT TEST D: THE DOOR AJAR CHIME DOES NOT OPERATE PROPERLY

Ford Motor Company

TEST CONDITIONS	TEST DETAILS/RESULTS/ACTIONS
D1 CHECK THE INTERIOR LIGHTS OPERATE PROPERLY WITH EACH DOOR	
	1 Open and close each door one at a time. • Do the interior lights illuminate and turn off with the opening and closing of each door? → **Yes** GO to **D2**. → **No** REFER to Section 417-02.
D2 CHECK FOR SCIL MODULE RECOGNITION OF IGNITION KEY IN RUN POSITION — MONITOR THE SCIL PID IGN__SCI	
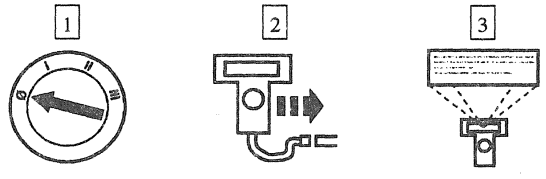	3 Monitor the SCIL PID IGN__SCI.

(Continued)

DIAGNOSIS AND TESTING (Continued)

PINPOINT TEST D: THE DOOR AJAR CHIME DOES NOT OPERATE PROPERLY (Continued)

TEST CONDITIONS	TEST DETAILS/RESULTS/ACTIONS
D2 CHECK FOR SCIL MODULE RECOGNITION OF IGNITION KEY IN RUN POSITION — MONITOR THE SCIL PID IGN__SCI (Continued)	
4 	• Does the SCIL PID IGN__SCI indicate RUN? → **Yes** REPLACE the SCIL module; REFER to Section 419-10. TEST the system for normal operation. → **No** REPAIR circuit 251 (BR/O) and/or circuit 640 (R/Y). TEST the system for normal operation.

PINPOINT TEST E:THE HEADLAMP ON REMINDER CHIME DOES NOT OPERATE PROPERLY

TEST CONDITIONS	TEST DETAILS/RESULTS/ACTIONS
E1 CHECK THE HEADLAMPS OPERATE PROPERLY	
	1 Turn on the headlamps. • Do all the lamps operate properly? → **Yes** GO to E2. → **No** REFER to Section 417-01.
E2 CHECK WARNING CHIME WHEN THE DRIVER DOOR IS OPEN	
	1 Open the driver door. • Do the interior lights come on? → **Yes** REPLACE the SCIL module; REFER to Section 419-10. TEST the system for normal operation. → **No** REFER to Section 417-02.

Unauthorized Product
Ford Motor Company

DIAGNOSIS AND TESTING (Continued)

PINPOINT TEST F: THE CHIME SOUNDS WHEN THE DRIVER DOOR IS AJAR (NO KEY IN IGNITION AND HEADLAMPS OFF)

TEST CONDITIONS	TEST DETAILS/RESULTS/ACTIONS
F1 MONITOR THE SCIL PID IGN__KEY	
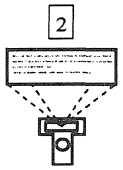	[1] Remove the key from the ignition switch. [2] Monitor the SCIL PID IGN__KEY. • Does the SCIL PID IGN__KEY indicate IN? → **Yes** GO to Pinpoint Test C. → **No** REPLACE the SCIL module; REFER to Section 419-10. TEST the system for normal operation.

PINPOINT TEST G: LUGGAGE COMPARTMENT DOOR AJAR CHIME DOES NOT OPERATE PROPERLY

TEST CONDITIONS	TEST DETAILS/RESULTS/ACTIONS
G1 CHECK OPERATION OF THE LUGGAGE COMPARTMENT DOOR	
	[1] Verify the luggage compartment door opens when the trunk lid release button is depressed. • Does the luggage compartment door operate normally? → **Yes** GO to **G2.** → **No** REFER to Section 501-14A.
G2 CHECK FOR TRUNK LID LAMP ILLUMINATION WITH THE LUGGAGE COMPART MENT DOOR OPEN	
	[1] Open the luggage compartment door. • Is the trunk lid lamp illuminated? → **Yes** GO to **G6.** → **No** GO to **G3.**

Official Licensed Product
Ford Motor Company

(Continued)

DIAGNOSIS AND TESTING (Continued)

PINPOINT TEST G: LUGGAGE COMPARTMENT DOOR AJAR CHIME DOES NOT OPERATE PROPERLY (Continued)

TEST CONDITIONS	TEST DETAILS/RESULTS/ACTIONS
G3 CHECK CIRCUIT 707 (W/Y) FOR OPEN	
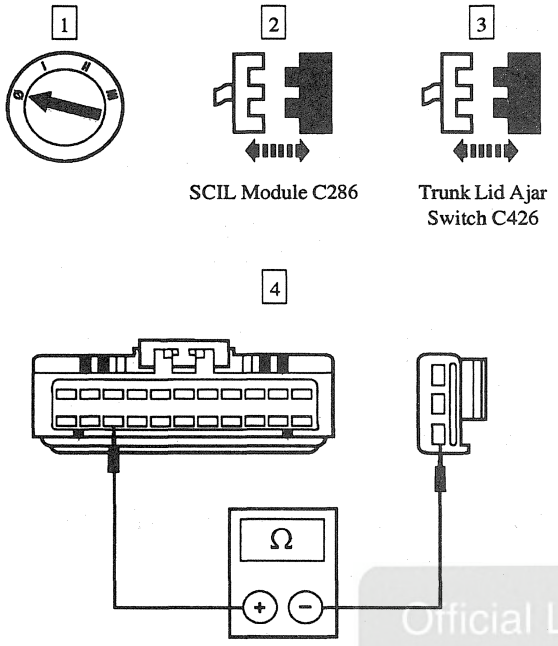	4 Measure the resistance between SCIL module C286-14, circuit 707 (W/Y), and trunk lid ajar switch C426, circuit 707 (W/Y). • Is the resistance less than 5 ohms? → **Yes** GO to **G4**. → **No** REPAIR circuit 707 (W/Y). TEST the system for normal operation.
G4 CHECK CIRCUIT 707 (W/Y) FOR SHORT TO POWER	
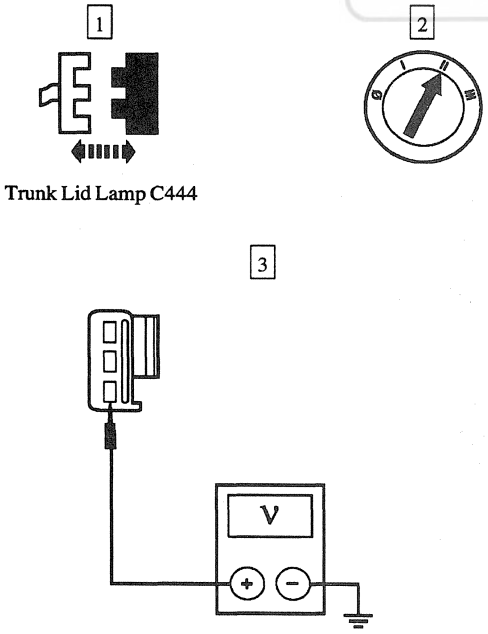	3 Measure the voltage between trunk lid ajar switch C426, circuit 707 (W/Y), and ground. • Is any voltage indicated? → **Yes** REPAIR circuit 707 (W/Y). TEST the system for normal operation. → **No** GO to **G5**.

Official Licensed Product

(Continued)

DIAGNOSIS AND TESTING (Continued)

PINPOINT TEST G: LUGGAGE COMPARTMENT DOOR AJAR CHIME DOES NOT OPERATE PROPERLY (Continued)

TEST CONDITIONS	TEST DETAILS/RESULTS/ACTIONS
G5 CHECK TRUNK LID AJAR SWITCH FOR OPEN	
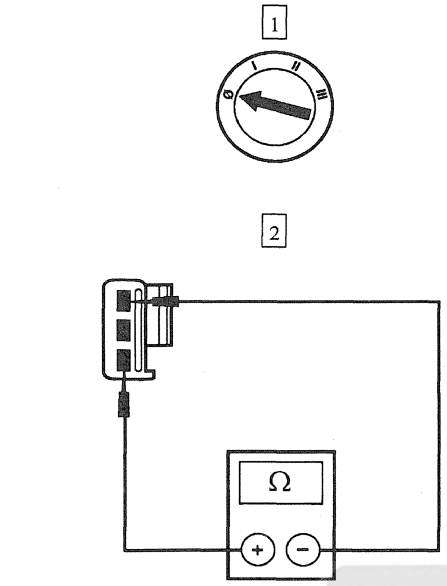 GK6949-A	2 Measure the resistance between trunk lid ajar switch terminals. • Is the resistance less than 5 ohms? → **Yes** REPLACE the SCIL module; REFER to Section 419-10. TEST the system for normal operation. → **No** REPLACE the trunk lid ajar switch. TEST the system for normal operation.
G6 CHECK CIRCUIT 707 (W/Y) FOR OPEN	
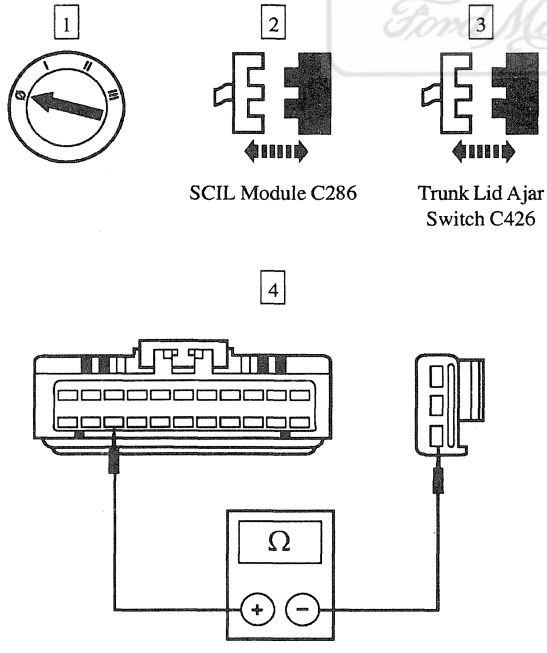 GK6089-A	4 Measure the resistance between SCIL module C286-14, circuit 707 (W/Y), and trunk lid ajar switch C426, circuit 707 (W/Y). • Is the resistance less than 5 ohms? → **Yes** REPLACE SCIL module; REFER to Section 419-10. TEST the system for normal operation. → **No** REPAIR circuit 707 (W/Y). TEST the system for normal operation.

Official Licensed Product Ford Motor Company

DIAGNOSIS AND TESTING (Continued)

PINPOINT TEST H: NO COMMUNICATION WITH THE MODULE — DRIVER DOOR MODULE

TEST CONDITIONS	TEST DETAILS/RESULTS/ACTIONS
H1 CHECK FUSE JUNCTION PANEL FUSE 41 (10A)	
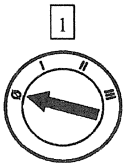 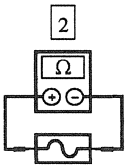 Fuse 41 (10A)	• Is the fuse OK? → **Yes** REINSTALL the fuse. GO to **H2**. → **No** REPLACE the fuse in question. TEST the system for normal operation. If the fuse fails again, CHECK for a short to ground. REPAIR as necessary.
H2 CHECK THE VOLTAGE TO THE DDM — CIRCUIT 1077 (DG/P)	
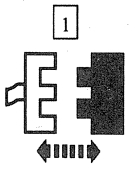 DDM 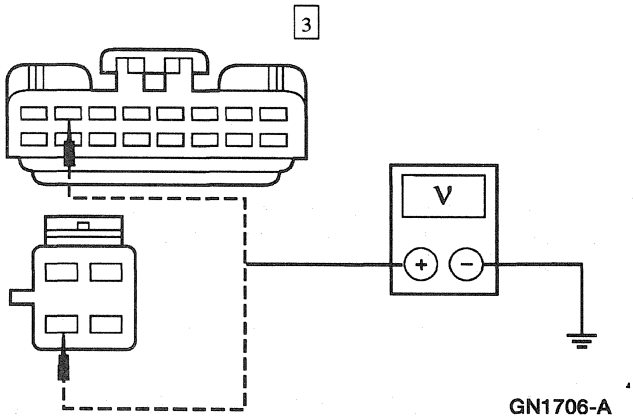 	3 Measure the voltage between DDM C455-2, circuit 1077 (DG/P), and ground; and between DDM C457-3, circuit 1077 (DG/P), and ground. • Are the voltages greater than 10 volts? → **Yes** GO to **H3**. → **No** REPAIR circuit 1077 (DG/P). TEST the system for normal operation.

Ford Motor Company Official Licensed Product

(Continued)

DIAGNOSIS AND TESTING (Continued)

PINPOINT TEST H: NO COMMUNICATION WITH THE MODULE — DRIVER DOOR MODULE (Continued)

TEST CONDITIONS	TEST DETAILS/RESULTS/ACTIONS
H3 CHECK CIRCUIT'S 57 (BK) AND 875 (BK/LB) FOR OPEN	
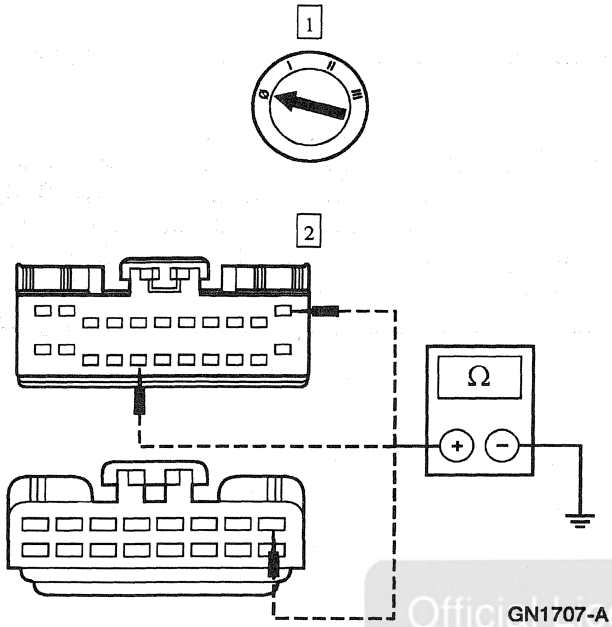	2 Measure the resistance between DDM C456-16, circuit 57 (BK), and ground; and between C456-11, circuit 57 (BK), and ground; and between C455-8, circuit 875 (BK/LB), and ground. • Are the resistances less than 5 ohms? → **Yes** REFER to Section 418-00. → **No** REPAIR the circuit in question. TEST the system for normal operation.

Official Licensed Product
Ford Motor Company

REMOVAL AND INSTALLATION

Switch — Driver Door Ajar

Removal and Installation

Refer to Section 501-14A.

Switch — Key In Ignition Warning

Removal and Installation

To remove and install the key in ignition warning switch; refer to Section 211-04. The key in ignition warning switch is internal to the ignition switch lock cylinder, and is replaced as as assembly.

Module — Steering Column/Ignition/Lighting (SCIL)

Removal and Installation

To remove and install the steering column/ignition/lighting module, refer to Section 419-10.

SECTION 414-00 Charging System — General Information

VEHICLE APPLICATION: Mark VIII

SUBJECT	PAGE
DESCRIPTION AND OPERATION	
Charging System	414-00-2
DIAGNOSIS AND TESTING	
Charging System	414-00-3
Component Tests	414-00-22
Generator On-Vehicle Tests	414-00-23
Inspection and Verification	414-00-3
Pinpoint Tests	414-00-5
Symptom Chart	414-00-4
SPECIFICATIONS	414-00-24

Official Licensed Product
Ford Motor Company

DESCRIPTION AND OPERATION

Charging System

Component Location

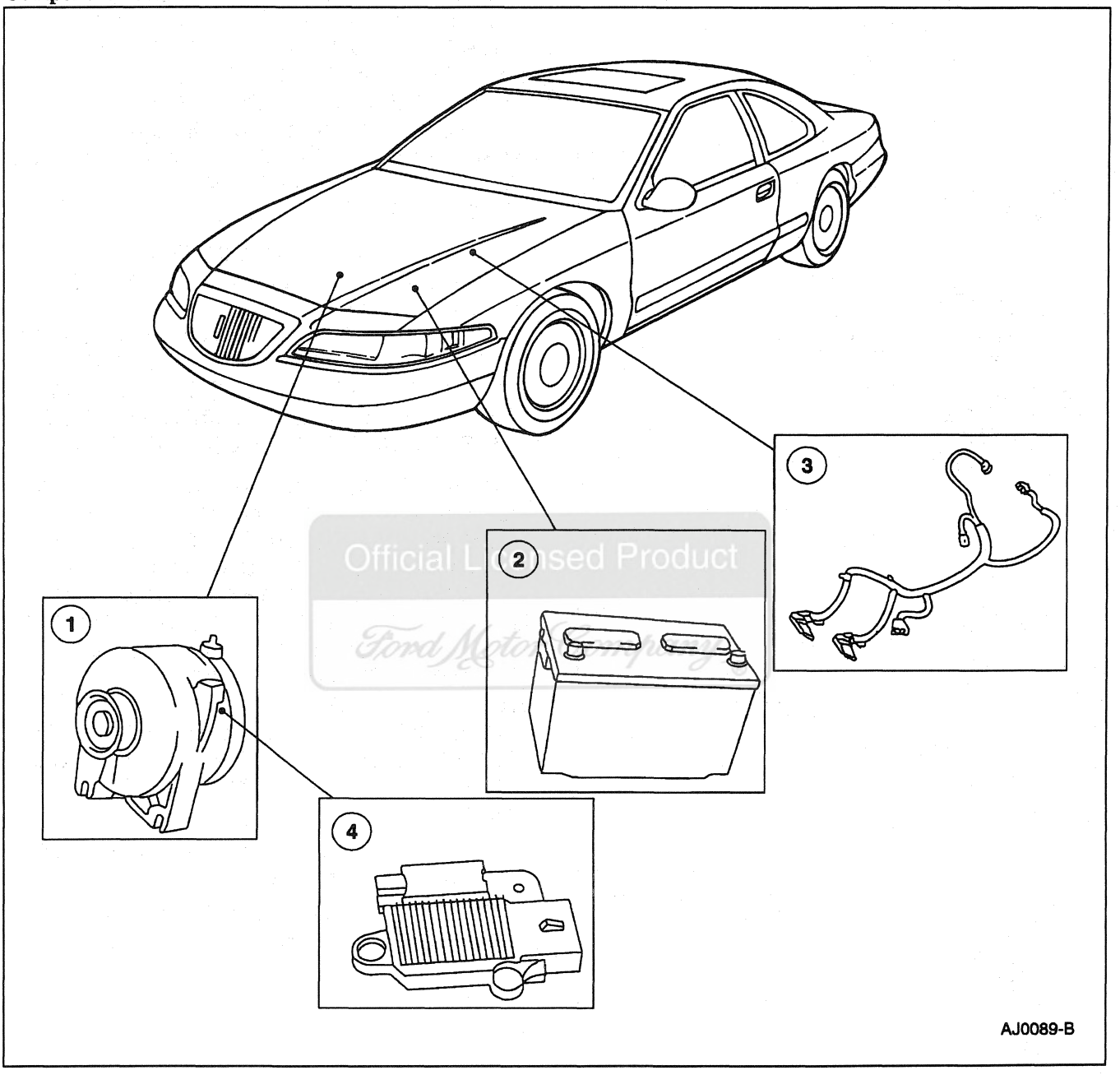

Official Licensed Product
Ford Motor Company

Item	Part Number	Description
1	10300	Generator
2	10655	Battery

Item	Part Number	Description
3	14301	Battery Cable
4	10316	Voltage Regulator

(Continued)

DIAGNOSIS AND TESTING

Charging System

Refer to Electrical and Vacuum Troubleshooting Manual, Cell 12, Charging System for schematic and connector information.

Special Tool(s)

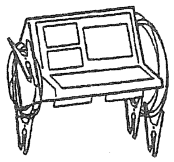 ST1179-A	Alternator, Regulator Battery and Starter Tester 010-00725 or equivalent
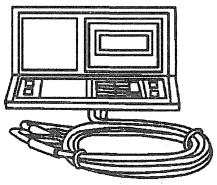 ST1700-A	Small Battery Tester 010-00727 or equivalent
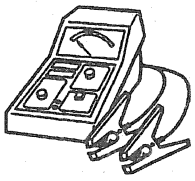 ST1178-A	Power Sensor Plus Electronic Battery Tester 162-R0002 or equivalent
ST1137-A	73 Digital Multimeter 105-R0051 or equivalent
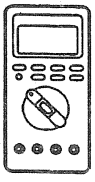 ST1177-A	88 Digital Multimeter 105-R0053 or equivalent

Inspection and Verification

⚠ WARNING: BATTERIES (10655) NORMALLY PRODUCE EXPLOSIVE GASES WHICH CAN CAUSE PERSONAL INJURY. THEREFORE, DO NOT ALLOW FLAMES, SPARKS OR LIGHTED SUBSTANCES TO COME NEAR THE BATTERY. WHEN CHARGING OR WORKING NEAR A BATTERY, ALWAYS SHIELD YOUR FACE AND PROTECT YOUR EYES. ALWAYS PROVIDE VENTILATION.

⚠ WARNING: WHEN LIFTING A PLASTIC-CASED BATTERY, EXCESSIVE PRESSURE ON THE END WALLS COULD CAUSE ACID TO SPEW THROUGH THE VENT CAPS, RESULTING IN PERSONAL INJURY, DAMAGE TO THE VEHICLE OR BATTERY. LIFT WITH A BATTERY CARRIER OR WITH YOUR HANDS ON OPPOSITE CORNERS.

⚠ WARNING: KEEP OUT OF THE REACH OF CHILDREN. BATTERIES CONTAIN SULFURIC ACID. AVOID CONTACT WITH SKIN, EYES, OR CLOTHING. ALSO, SHIELD YOUR EYES WHEN WORKING NEAR THE BATTERY TO PROTECT AGAINST POSSIBLE SPLASHING OF THE ACID SOLUTION. IN CASE OF ACID CONTACT WITH SKIN OR EYES, FLUSH IMMEDIATELY WITH WATER FOR A MINIMUM OF 15 MINUTES AND GET PROMPT MEDICAL ATTENTION. IF ACID IS SWALLOWED, CALL A PHYSICIAN IMMEDIATELY.

1. Verify the customer's concern by operating the engine to duplicate the concern.
2. Inspect to determine if one of the following mechanical or electrical concerns apply:

Official Licensed Product Ford Motor Company

DIAGNOSIS AND TESTING (Continued)

Visual Inspection Chart

Mechanical	Electrical
• Battery • Generator drive belt • Generator pulley	• Battery charge • Fuse(s) power distribution box: fuse link (12GA), fuse link (18GA), fuse junction panel: Fuse 17 (10A) • Electrical connectors • Electrical connections • Battery charge warning indicator • Other electrical systems malfunctions

3. If the inspection reveals obvious concern(s) that can be readily identified, service as required.
4. Measure the open circuit battery voltage. If the battery voltage is less than 12.0 volts, test and recharge the battery before continuing with diagnosis.
5. Observe charging system warning indicator status under the following conditions:
   1 The charging system warning indicator will illuminate with the ignition switch in RUN and the engine OFF.
   2 The charging system warning indicator will be OFF with the engine running.
   3 The charging system warning indicator will be OFF with the ignition switch OFF.
6. Check the battery voltage before and after starting the engine to determine if the battery voltage increases. Refer to the Normal Charging System Voltages chart.

Normal Charging System Voltages

Terminal	A	S	I	Alt B+	Batt	Eng to Bat Gnd
Key OFF	12V	0V	0V	12V	12V	0V
Key On-Engine Off	12V	0V	1-3V	12V	12V	0V
Engine Running	12V-15V	6-8V	12V-15V	12V-15V	12V-15V	0V

7. If the concern(s) remains after the inspection determine the symptom(s) and go to the Symptom Chart.

Ford Licensed Product
Ford Motor Company

Symptom Chart

SYMPTOM CHART

Condition	Possible Source	Action
• The Charging System Warning Indicator is ON with the Engine Running (The Battery Voltage Does Not Increase)	• A Circuit 35 (O/LB). • A Circuit in-line mini-fuse. • B+ Circuit 36 (Y/W). • B+ mega fuse. • I Circuit 904 (LG/R). • Voltage regulator. • Generator.	• GO to Pinpoint Test A.
• The Charging System Warning Indicator is OFF with the Ignition Switch in the RUN Position and the Engine OFF (Battery Voltage Does Not Increase)	• Voltage regulator connector. • I Circuit 905 (LG/R). • Fuse 19 (10A). • Voltage regulator. • Loose or damaged generator. • Harness connector.	• GO to Pinpoint Test B.
• The Charging System Warning Indicator Stays ON with the Engine Running and the Battery Voltage Increases	• Generator. • Voltage regulator.	• GO to Pinpoint Test C.
• The Charging System Warning Indicator is OFF with the Ignition Switch in the RUN Position and the Engine OFF (Battery Voltage Increases)	• Charging system warning indicator lamp bulb. • Instrument cluster. • Generator. • Voltage regulator.	• GO to Pinpoint Test D.

DIAGNOSIS AND TESTING (Continued)

SYMPTOM CHART (Continued)

Condition	Possible Source	Action
• The Charging System Warning Indicator Operates Correctly but the Battery Voltage Does Not Increase	• B+ Circuit 36 (Y/W). • B+ mega fuse. • Loose or damaged harness connector. • Battery cables. • Generator. • Voltage regulator.	• GO to Pinpoint Test E.
• The Battery is Dead or Will Not Stay Charged or Low Battery or Generator Voltage	• Corroded terminal(s). • Loose connection(s). • High key-off load. • Generator. • Voltage regulator.	• GO to Pinpoint Test F.
• The Charging System Warning Indicator Flickers/Is Intermittent	• Loose connection(s). • In-line mini-fuse A Circuit loose. • Fuse 19 (10A) I Circuit loose. • Generator. • Voltage regulator.	• GO to Pinpoint Test G.
• The System Overcharges (Battery Voltage Greater Than 15.5 Volts)	• A Circuit 35 (O/LB). • Generator (low output). • Voltage regulator. • I Circuit 904 (LG/R).	• GO to Pinpoint Test H.
• Battery Leakage or Damage	• A Circuit 35 (O/LB). • Voltage regulator. • Voltage gauge. • Instrument cluster/wiring.	• GO to Pinpoint Test J.
• The Voltage Gauge Reads High or Low	• Generator (low output). • Voltage regulator. • Voltage gauge. • Instrument cluster/wiring.	• GO to Pinpoint Test K.
• The Generator is Noisy	• Loose bolts/brackets. • Drive belt. • Generator/Pulley.	• GO to Pinpoint Test L.
• Radio Interference	• Generator. • Wiring/routing.. • In-vehicle entertainment system.	• GO to Pinpoint Test M.

Off Licensed Product Ford Motor Company

Pinpoint Tests

⚠ **CAUTION: Do not make jumper connections except as directed. Improper connections may damage the voltage regulator (VR)(10316) or fuses/fuse links.**

NOTE: All voltage measurements are referenced to the negative (-) battery post unless otherwise specified.

NOTE: All "ignition switch in RUN" measurements are made with the engine NOT running unless directed to "START ENGINE."

NOTE: When the battery has been disconnected and reconnected, some abnormal drive symptoms may occur while the powertrain control module (PCM)(12A650) relearns its fuel trim. The vehicle may need to be driven 16 km (10 miles) or more to relearn the strategy.

DIAGNOSIS AND TESTING (Continued)

PINPOINT TEST A: THE CHARGING SYSTEM WARNING INDICATOR IS ON WITH THE ENGINE RUNNING (BATTERY VOLTAGE DOES NOT INCREASE)

TEST CONDITIONS	TEST DETAILS/RESULTS/ACTIONS
A1 CHECK A CIRCUIT FUSE LINK (18GA)	
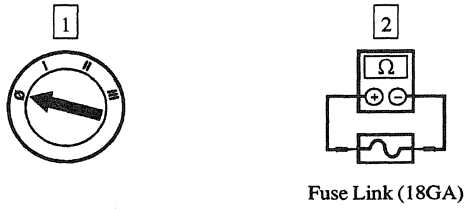	2 Check the A circuit Fuse 20 (15A) in the Power Distribution Box. • Is the fuse OK? → **Yes** GO to **A2.** → **No** REPLACE the Fuse Link (18GA). TEST the system for normal operation.
A2 CHECK CIRCUIT 38 (BK/O)	
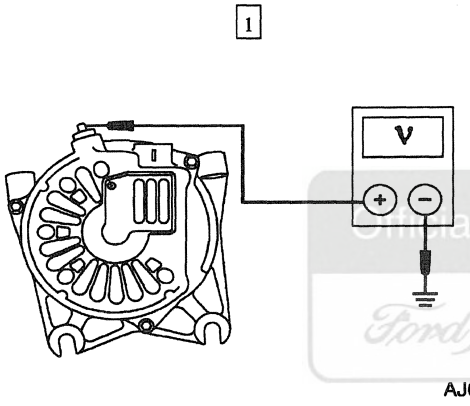	1 Measure the voltage between the B+ terminal at the generator Circuit 38 (BK/O) and ground. • Is the voltage equal to battery positive voltage (B+)? → **Yes** GO to **A3.** → **No** REPAIR Circuit 38 (BK/O). TEST the system for normal operation.

Official Licensed Publication
Ford Motor Company

(Continued)

DIAGNOSIS AND TESTING (Continued)

PINPOINT TEST A: THE CHARGING SYSTEM WARNING INDICATOR IS ON WITH THE ENGINE RUNNING (BATTERY VOLTAGE DOES NOT INCREASE) (Continued)

TEST CONDITIONS	TEST DETAILS/RESULTS/ACTIONS
A3 CHECK CIRCUIT 36 (Y/W)	
1 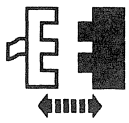 Generator Connector C154 2 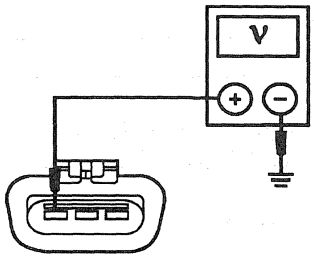 AJ0202-A	2 Measure the voltage between the voltage regulator connector C154 Pin A, Circuit 36 (Y/W) and ground. • Is the voltage equal to battery positive voltage (B+)? → **Yes** GO to **A4**. → **No** REPAIR Circuit 36 (Y/W). TEST the system for normal operation.
A4 CHECK I CIRCUIT 904 (LG/R) FOR AN OPEN	
1 2 Generator Connector C154 3 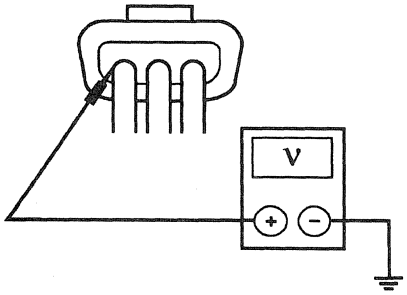 GJ0440-A	3 **NOTE:** The voltage regulator must be connected to the wiring harness for this test. Measure the voltage between the voltage regulator I-terminal, Circuit 904 (LG/R) and ground. • Is the voltage greater than 1 volt? → **Yes** GO to **A5**. → **No** REPAIR Circuit 904 (LG/R) as necessary. TEST the system for normal operation.

(Continued)

Official Licensed Product Ford Motor Company

DIAGNOSIS AND TESTING (Continued)

PINPOINT TEST A: THE CHARGING SYSTEM WARNING INDICATOR IS ON WITH THE ENGINE RUNNING (BATTERY VOLTAGE DOES NOT INCREASE) (Continued)

TEST CONDITIONS	TEST DETAILS/RESULTS/ACTIONS
A5 CHECK GENERATOR OUTPUT	
1 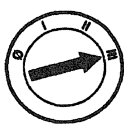 2 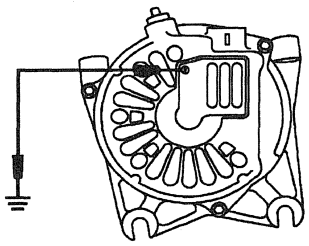 AJ0212-A	2 With the engine running, ground the F pin on the generator/regulator. • Does the battery voltage increase and the charging system warning indicator turn off? → **Yes** REPLACE the generator. TEST the system for normal operation. → **No** REPLACE the generator. TEST the system for normal operation.

Official Licensed Product

PINPOINT TEST B: THE CHARGING SYSTEM WARNING INDICATOR IS OFF WITH THE IGNITION SWITCH IN THE RUN POSITION AND THE ENGINE OFF (BATTERY VOLTAGE DOES NOT INCREASE)

TEST CONDITIONS	TEST DETAILS/RESULTS/ACTIONS
B1 CHECK GENERATOR CONNECTOR C154	
1 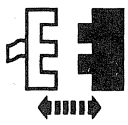 Generator Connector C154	2 Check generator connector C154 for bent, or damaged pins. • Is the connector OK? → **Yes** GO to **B2**. → **No** REPAIR connector C154 as necessary. TEST the system for normal operation.

(Continued)

DIAGNOSIS AND TESTING (Continued)

PINPOINT TEST B: THE CHARGING SYSTEM WARNING INDICATOR IS OFF WITH THE IGNITION SWITCH IN THE RUN POSITION AND THE ENGINE OFF (BATTERY VOLTAGE DOES NOT INCREASE) (Continued)

TEST CONDITIONS	TEST DETAILS/RESULTS/ACTIONS
B2 CHECK GENERATOR GROUNDS	
	1 Check all ground connections between the generator, voltage regulator, and the battery. • Are the ground connections OK? → **Yes** GO to **B3**. → **No** REPAIR connections as necessary. TEST the system for normal operation.
B3 CHECK VOLTAGE AT I CIRCUIT 904 (LG/R)	
1 2 Generator Connector C154 3 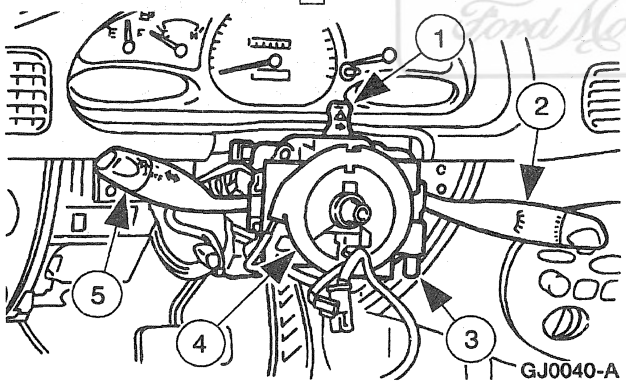 GJ0040-A	3 **NOTE:** The generator connector C154 must be connected to the generator for this test. Measure the voltage between the generator I terminal, Circuit 904 (LG/R) and ground. • Is the voltage greater than 1 volt? → **Yes** REPLACE the generator. → **No** REPAIR Circuit 904 (LG/R) for open circuit. TEST the system for normal operation.

Official Licensed Product
Ford Motor Company

DIAGNOSIS AND TESTING (Continued)

PINPOINT TEST C: THE CHARGING SYSTEM WARNING INDICATOR IS ON WITH THE ENGINE RUNNING AND THE BATTERY VOLTAGE INCREASES

TEST CONDITIONS	TEST DETAILS/RESULTS/ACTIONS
C1 CHECK CONNECTOR C154	
1 Generator Connector C154	2 Make sure the connector C154 is correctly mated to the generator and making contact. • Is the connection OK? → **Yes** GO to **C2**. → **No** REPAIR Connector C154 as necessary. TEST the system for normal operation.
C2 CHECK GENERATOR OUTPUT VOLTAGE	
1 2 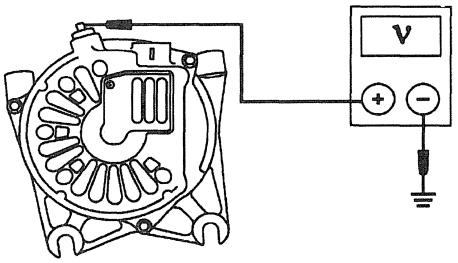 AJ0213-A	2 With the engine running at 2000 RPM, measure the voltage output at the generator B+ terminal. • Is the voltage output less than 16 volts? → **Yes** GO to **C3**. → **No** GO to Pinpoint Test H.

Official Licensed Product
Ford Motor Company

(Continued)

DIAGNOSIS AND TESTING (Continued)

PINPOINT TEST C: THE CHARGING SYSTEM WARNING INDICATOR IS ON WITH THE ENGINE RUNNING AND THE BATTERY VOLTAGE INCREASES (Continued)

TEST CONDITIONS	TEST DETAILS/RESULTS/ACTIONS
C3 CHECK WARNING INDICATOR OPERATION	
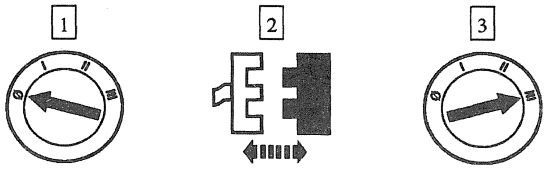 Generator Connector C154	4 With the engine running at idle, check the Warning Indicator. • Is the Warning Indicator on? → **Yes** REPAIR connector C154, I circuit 904 (LG/R) as necessary. TEST the system for normal operation. → **No** GO to Pinpoint Test D.

Official Licensed Product Ford Motor Co.

PINPOINT TEST D: THE CHARGING SYSTEM WARNING INDICATOR IS OFF WITH THE IGNITION SWITCH IN THE RUN POSITION AND THE ENGINE OFF (BATTERY VOLTAGE INCREASES)

TEST CONDITIONS	TEST DETAILS/RESULTS/ACTIONS
D1 CHECK CHARGING SYSTEM WARNING INDICATOR OPERATION	
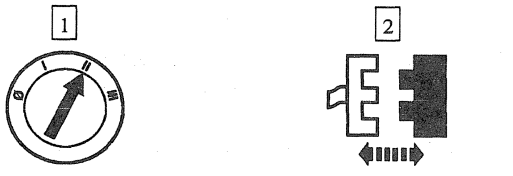 Generator Connector C154 3 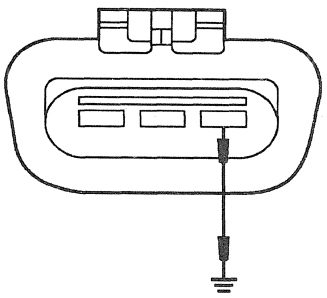 AJ0206-A	3 Ground the generator connector C154 I circuit with the key ON and the engine OFF. • Is the warning indicator on? → **Yes** REPLACE the generator. TEST the system for normal operation. → **No** REPAIR connector C154 I circuit 904 (LG/R) as necessary. TEST the system for normal operation.

DIAGNOSIS AND TESTING (Continued)

PINPOINT TEST E: THE CHARGING SYSTEM WARNING INDICATOR OPERATES CORRECTLY BUT THE BATTERY VOLTAGE DOES NOT INCREASE

TEST CONDITIONS	TEST DETAILS/RESULTS/ACTIONS
E1 CHECK CIRCUIT 38 (BK/O) VOLTAGE	
1 2 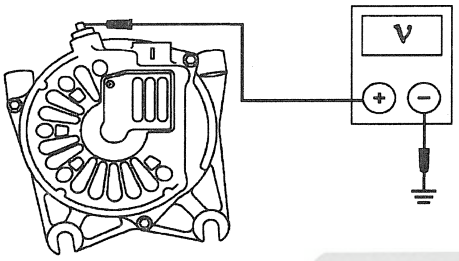 AJ0213-A	2 Check for voltage at generator B+ connector with the key ON and the engine OFF. • Is the voltage equal to battery positive voltage (B+)? → **Yes** GO to **E2.** → **No** SERVICE Circuit 38 (BK/O) as necessary. TEST the system for normal operation.
E2 CHECK GENERATOR CONNECTORS	
1 Generator Connector C154	2 Check the battery and generator connector C154 for corrosion and tightness. • Are the connectors clean and tight? → **Yes** REFER to Component Test—Generator On-vehicle Tests. → **No** SERVICE the connectors as necessary. TEST the system for normal operation.

Official Licensed Product
Ford Motor Company

DIAGNOSIS AND TESTING (Continued)

PINPOINT TEST F: THE BATTERY IS DEAD OR WILL NOT STAY CHARGED OR LOW BATTERY OR GENERATOR VOLTAGE

TEST CONDITIONS	TEST DETAILS/RESULTS/ACTIONS
F1 CHECK BATTERY DRAIN	
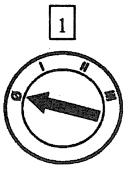	2 Make sure that all interior lights and switches are off and all doors are closed. Perform battery drain test (Refer to Component Tests, Battery—Drain Testing). • Is the drain greater than 0.5 amps? → **Yes** GO to Component Tests—Battery—Drain Testing → **No** GO to **F2**.
F2 CHECK GENERATOR OUTPUT	
	1 Check generator output. (Refer to Component Test, Generator On-vehicle Tests). • Is the generator OK? → **Yes** GO to **F3**. → **No** REPLACE the generator. TEST the system for normal operation.
F3 CHECK BATTERY CONDITION	
	1 Check the battery capacity. Refer to Component Test, Battery—Capacity Test. • Is the battery OK? → **Yes** GO to **F4**. → **No** REPLACE the battery. TEST the system for normal operation.

(Continued)

Official Licensed Product Ford Motor Company

DIAGNOSIS AND TESTING (Continued)

PINPOINT TEST F: THE BATTERY IS DEAD OR WILL NOT STAY CHARGED OR LOW BATTERY OR GENERATOR VOLTAGE (Continued)

TEST CONDITIONS	TEST DETAILS/RESULTS/ACTIONS
F4 CHECK OTHER SYSTEMS FOR DRAINS	
	1 Check for drains from electronic modules. (Refer to Component Test, Battery—Electronic Drains with Shut Off When the Battery Cable is Disconnected.) • Are electronic modules OK? → **Yes** RECHARGE the battery. TEST the system for normal operation. → **No** REPLACE the defective module as necessary. TEST the system for normal operation.

PINPOINT TEST G: THE CHARGING SYSTEM WARNING INDICATOR FLICKERS/IS INTERMITTENT

TEST CONDITIONS	TEST DETAILS/RESULTS/ACTIONS
G1 CHECK POWER TO CIRCUITS 36 (Y/W) AND 904 (LG/R)	
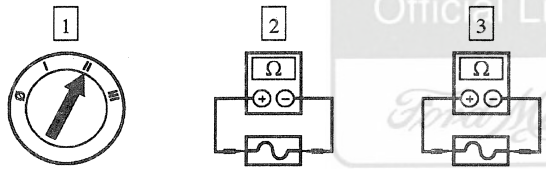	4 Check Fuse 17 (10A) and the Fuse Link (18GA). • Are the fuses OK? → **Yes** GO to G2. → **No** SERVICE as necessary. TEST the system for normal operation.

Official Licensed Product Ford Motor Company

(Continued)

DIAGNOSIS AND TESTING (Continued)

PINPOINT TEST G: THE CHARGING SYSTEM WARNING INDICATOR FLICKERS/IS INTERMITTENT (Continued)

TEST CONDITIONS	TEST DETAILS/RESULTS/ACTIONS
G2 CHECK FIELD CIRCUIT	
1 2 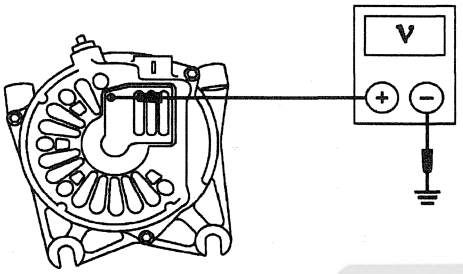 AJ0201-A	2 Using an insulated probe measure voltage at test point F at rear of generator. • Is the voltage equal to battery voltage? → **Yes** GO to **G3**. → **No** REPLACE generator. TEST the system for normal operation.
G3 CHECK THE WARNING SYSTEM INDICATOR OPERATION	
1 	2 With the engine running, increase engine speed. Check the indicator operation and for battery voltage increase. • Does the voltage increase above 15 volts or the indicator flicker? → **Yes** SERVICE Circuit 36 (Y/W) or Circuit 904 (LG/R) as necessary. TEST the system for normal operation. → **No** REPLACE the generator. TEST the system for normal operation.

Official Licensed Product
Ford Motor Company

DIAGNOSIS AND TESTING (Continued)

PINPOINT TEST H: THE SYSTEM OVERCHARGES (BATTERY VOLTAGE GREATER THAN 15.5 VOLTS)

TEST CONDITIONS	TEST DETAILS/RESULTS/ACTIONS
H1 CHECK FOR VOLTAGE DROP	
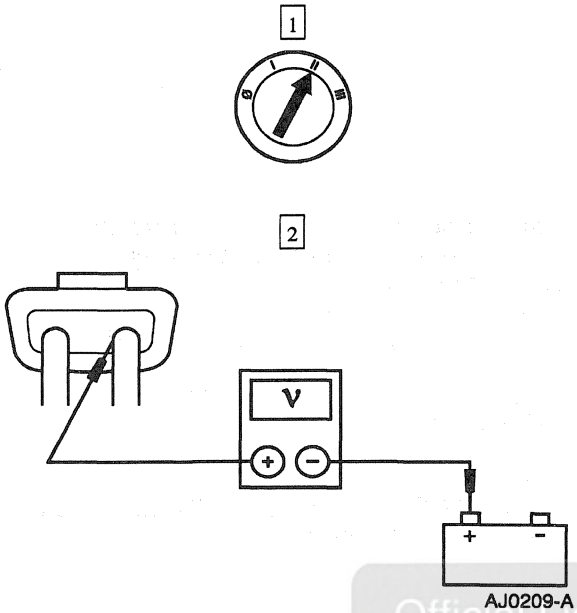 AJ0209-A	2 Check for voltage drop from the battery positive post and the voltage regulator A circuit at connector C154. • Is the voltage drop less than.5 volts? → **Yes** GO to **H2**. → **No** SERVICE Circuit 36 (Y/W) for high resistance as necessary. TEST the system for normal operation.
H2 CHECK BATTERY VOLTAGE	
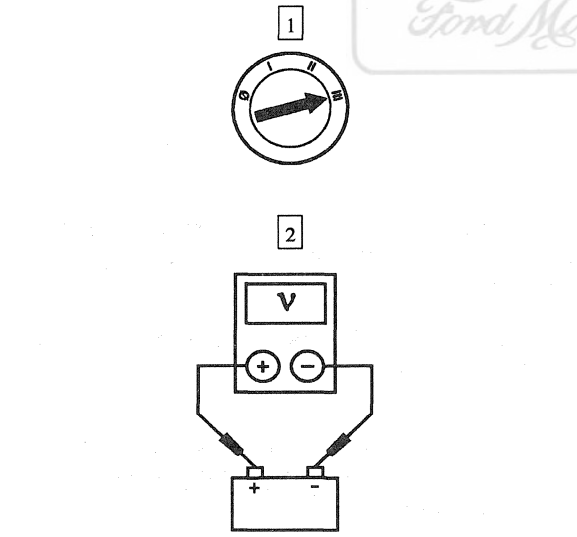 AJ0210-A	2 With the engine running turn off all accessories. Increase the engine speed and monitor the voltage at the battery. • Does battery voltage remain less than 15 volts? → **Yes** GO to **H3**. → **No** GO to **H5**.

Official Licensed Product
Ford Motor Company

(Continued)

DIAGNOSIS AND TESTING (Continued)

PINPOINT TEST H: THE SYSTEM OVERCHARGES (BATTERY VOLTAGE GREATER THAN 15.5 VOLTS) (Continued)

TEST CONDITIONS	TEST DETAILS/RESULTS/ACTIONS
H3 CHECK GENERATOR FOR LOW VOLTAGE	
1 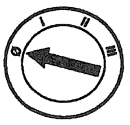 2 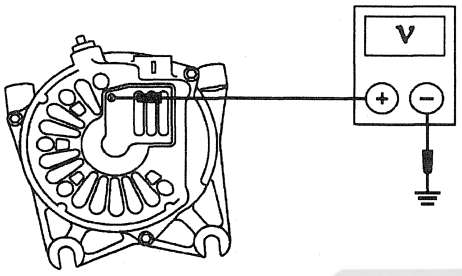 AJ0201-A	2 With the ignition switch OFF, use an insulated probe to measure the voltage at the voltage regulator F terminal. • Does the voltage equal battery voltage? → **Yes** GO to **H4**. → **No** REPLACE the generator. TEST the system for normal operation.
H4 CHECK THE WARNING SYSTEM INDICATOR OPERATION	
1 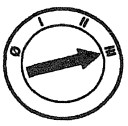	2 With the engine running, increase engine speed and check the indicator operation and for battery voltage increase. • Does the voltage increase above 15 volts or the indicator flicker? → **Yes** SERVICE Circuit 36 (Y/W) or Circuit 904 (LG/R) as necessary. TEST the system for normal operation. → **No** REPLACE the generator. TEST the system for normal operation.

(Continued)

Official Licensed Product
Ford Motor Company

DIAGNOSIS AND TESTING (Continued)

PINPOINT TEST H: THE SYSTEM OVERCHARGES (BATTERY VOLTAGE GREATER THAN 15.5 VOLTS) (Continued)

TEST CONDITIONS	TEST DETAILS/RESULTS/ACTIONS
H5 CHECK VOLTAGE REGULATOR OPERATION	
1 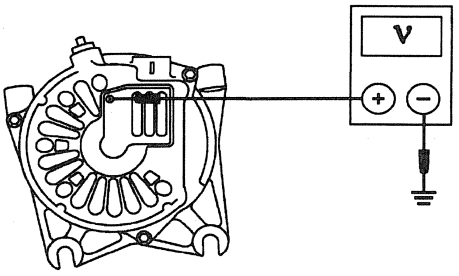 AJ0201-A	1 With the engine running use an insulated probe to monitor the voltage at the F pin while increasing the engine speed. • Does the voltage at pin F increase with higher engine speed? → **Yes** REPLACE the voltage regulator. TEST the system for normal operation. → **No** REPLACE the generator. TEST the system for normal operation.

PINPOINT TEST J: BATTERY LEAKAGE OR DAMAGE

TEST CONDITIONS	TEST DETAILS/RESULTS/ACTIONS
J1 CHECK FOR ACID LEAKAGE DAMAGE	
	1 Check for acid damage to vehicle harnesses and to the body. • Is there acid damage? → **Yes** SERVICE damaged areas as necessary. → **No** GO to **J2**.

Official Licensed Product Ford Motor Company

(Continued)

DIAGNOSIS AND TESTING (Continued)

PINPOINT TEST J: BATTERY LEAKAGE OR DAMAGE (Continued)

TEST CONDITIONS	TEST DETAILS/RESULTS/ACTIONS
J2 CHECK CHARGING SYSTEM FOR OVERCHARGING	
1 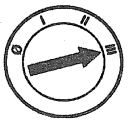 2 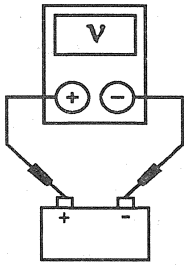 AJ0210-A	2 With the engine running turn off all accessories. Increase the engine speed and monitor the voltage at the battery. • Does battery voltage increase more than 15 volts? → **Yes** GO to Pinpoint Test H. → **No** GO to **J3**.
J3 CHECK BATTERY MOUNTING	
	1 Make sure the battery is properly mounted and level in the battery tray. • Is the battery properly mounted? → **Yes** GO to **J4**. → **No** SERVICE as necessary. TEST the system for normal operation.
J4 CHECK FOR BATTERY CONTACT	
	1 Make sure that there are no fasteners or other parts contacting the battery case causing excess pressure. • Is there anything contacting the battery case? → **Yes** SERVICE as necessary. TEST the system for normal operation. → **No** GO to **J5**.

(Continued)

Official Licensed Product
Ford Motor Company

DIAGNOSIS AND TESTING (Continued)

PINPOINT TEST J: BATTERY LEAKAGE OR DAMAGE (Continued)

TEST CONDITIONS	TEST DETAILS/RESULTS/ACTIONS
J5 CHECK BATTERY CASE FOR DAMAGE	
	1 Check the battery case for defects such as cracks, or poor seals. • Is the battery OK? → **Yes** System is OK. TEST the system for normal operation. → **No** REPLACE the battery. TEST the system for normal operation.

PINPOINT TEST K: THE VOLTAGE GAUGE READS HIGH OR LOW

TEST CONDITIONS	TEST DETAILS/RESULTS/ACTIONS
K1 CHECK BATTERY VOLTAGE	
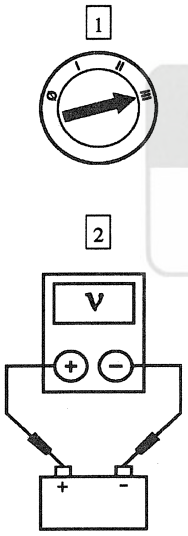 AJ0210-A	2 With the engine running turn off all accessories. Increase the engine speed and monitor the voltage at the battery. • Is the battery voltage more than 15 volts? → **Yes** GO to Pinpoint Test H. → **No** GO to **K2**.

Official Licensed Product
Ford Motor Company

(Continued)

DIAGNOSIS AND TESTING (Continued)

PINPOINT TEST K: THE VOLTAGE GAUGE READS HIGH OR LOW (Continued)

TEST CONDITIONS	TEST DETAILS/RESULTS/ACTIONS
K2 CHECK VOLTAGE GAUGE OPERATION	
1 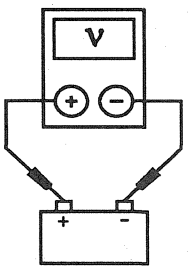 AJ0210-A	1 With the engine running monitor the voltage gauge reading and the battery voltage. • Are the voltage readings consistent? → **Yes** System is operating normally. → **No** REFER to Section 413-01 to continue diagnostics.

PINPOINT TEST L: THE GENERATOR IS NOISY

TEST CONDITIONS	TEST DETAILS/RESULTS/ACTIONS
L1 CHECK FOR ACCESSORY DRIVE NOISE	
	1 Check the drive belt to make sure it is properly installed and aligned; refer to Section 303-05. • Is the drive belt OK? → **Yes** GO to **L2**. → **No** GO to Section 303-05 and SERVICE the accessory drive system as required. TEST the system for normal operation.
L2 CHECK THE GENERATOR MOUNTING	
	1 Check the generator and the generator mounting brackets for loose bolts or misalignment. • Is the generator mounted correctly? → **Yes** REPLACE the generator. TEST the system for normal operation. → **No** INSTALL the generator to specifications. REFER to Section 414-02. TEST the system for normal operation.

Official Licensed Product
Ford Motor Company

DIAGNOSIS AND TESTING (Continued)

PINPOINT TEST M: RADIO INTERFERENCE

TEST CONDITIONS	TEST DETAILS/RESULTS/ACTIONS
M1 CHECK FOR RADIO INTERFERENCE	
1 3 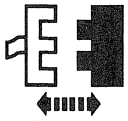 Generator Connector C154	2 Tune the radio to a station where the interference is present. • Is the interference present with the generator connector C154 disconnected? → **Yes** REFER to Section 415-00 to find the cause of the radio interference. TEST the system for normal operation. → **No** REPLACE the generator. TEST the system for normal operation.

Official Licensed Product
Ford Motor Company

Component Tests

Battery—Capacity Test

To perform this test, use a high rate discharge tester, Battery Tester, in conjunction with 73 Digital Multimeter.

1. Turn the tester to the OFF position.
2. Turn the multimeter selector switch to the DV volt position.
3. Connect the tester and multimeter positive test leads to the positive battery post and both negative test leads to the negative battery post. The multimeter clips must contact the battery posts and not the tester clips. Unless this is done, the actual battery terminal voltage will not be indicated.
4. Turn the load control knob in a clockwise direction until the ammeter reads approximately half of the cold cranking amps of the battery.
5. ⚠ **CAUTION: Avoid leaving the high discharge load on the battery for periods longer than 15 seconds.**

   With the ammeter reading the required load for 15 seconds, note the multimeter reading.

   - If the multimeter reading is 9.6 volts at 21°C (70°F) or more, the battery has a good output capacity and will readily accept a charge, if required.
   - If the voltage reading is below 9.6 volts at 21°C (70°F), and the battery is fully charged, the battery is damaged and must be replaced. If unsure about the battery's state of charge, charge the battery.

DIAGNOSIS AND TESTING (Continued)

6. After the battery has been charged, repeat the Battery Capacity Test.
   - If the capacity test battery voltage is still less than 9.6 volts at 21°C (70°F), replace the battery.
   - If the voltage is 9.6 or more at 21°C (70°F), the battery is satisfactory for service.
   - If the battery is found to be discharged only, check for a loose drive belt (8620), loose electrical connection, charging system performance, and perform Battery Drain Testing; refer to Battery—Drain Testing in this section.

Battery—Drain Testing

Check for current drains on the battery in excess of 50 milliamps with all the electrical accessories off and the vehicle at rest. Current drains can be tested with the following procedure.

⚠ WARNING: DO NOT ATTEMPT THIS TEST ON A LEAD-ACID BATTERY THAT HAS RECENTLY BEEN RECHARGED. EXPLOSIVE GASES CAN CAUSE PERSONAL INJURY.

⚠ CAUTION: To prevent damage to the meter, do not crank the engine or operate accessories that draw more than 10A.

NOTE: Many computers draw 10 mA or more continuously.

NOTE: Use an in-line ammeter between the battery positive or negative post and its respective cable.

1. Turn the switch to mA/A dc.
2. Disconnect the battery terminal and touch the probes.
3. Isolate the circuit causing the current drain by pulling out one fuse after another from the fuse junction panel while reading the display.

   The current reading will drop when the fuse on the bad circuit is pulled.
4. Reinstall the fuse and test the components (including connectors) of that circuit to find the defective component(s).

The current reading (current drain) should be less than 0.05 amp. If current drain exceeds 0.05 amp, a constant current drain is present. (Underhood, glove compartment and luggage compartment lamps) that do not shut off properly are all possible sources of current drain.

- If the drain is not caused by a vehicle lamp, remove the fuses from the interior fuse junction panel one at a time, until the cause of the drain is located.
- If the drain is still undetermined, remove the fuses one at a time at the power distribution box to find the problem circuit.

Battery—Electronic Drains Which Shut Off When the Battery Cable Is Disconnected

1. Repeat the steps of the battery drain testing.
2. Without starting the engine, turn the ignition switch to RUN for a moment and then OFF. Wait one minute for the illuminated entry lamps to turn off if equipped.
3. Connect the voltmeter and read the voltage.

The current reading (current drain) should be less than 0.05 amp. If current drain exceeds 0.05 amp after a few minutes, and if this drain did not show in previous tests, the drain is most likely caused by a malfunctioning electronic component. As in previous tests, remove the fuses from the fuse junction panel one at a time to locate the problem circuit.

Generator On-Vehicle Tests

⚠ CAUTION: To prevent damage to the generator (GEN)(10346), do not make jumper wire connections except as directed.

⚠ CAUTION: Do not allow any metal object to come in contact with the housing and the internal diode cooling fins with key on or off. A short circuit will result and burn out the diodes.

NOTE: Battery posts and cable clamps must be clean and tight for accurate meter indications.

NOTE: Refer to the Battery Tester Procedure Manual for complete directions on checking out the charging system.

DIAGNOSIS AND TESTING (Continued)

1. Turn OFF all lamps and electrical components.
2. Place the vehicle in transmission range NEUTRAL and apply the parking brake.
3. Perform the following component tests.

Generator On Vehicle Tests—Load Test

1. Switch the Battery Tester to the ammeter function.
2. Connect the positive and negative leads of the Battery Tester to the corresponding battery terminals.
3. Connect the current probe to the generator B+ output lead, Circuit 38 (BK/O).
4. With the engine running at 2000 rpm, adjust the Battery Tester load bank to determine the output of the generator; refer to the Symptom Chart in this section for diagnostic procedures.

Generator On Vehicle Tests—No-Load Test

1. Switch the Battery Tester to the voltmeter function.
2. Connect the voltmeter positive lead to the generator B+ terminal and the negative lead to ground.
3. Turn all electrical accessories off.
4. With the engine running at 2000 rpm, check the generator output voltage. The voltage should be between 13.0 and 15.0 volts. If not, refer to the Symptom Chart for diagnostic procedures.

SPECIFICATIONS

Official Licensed Product
Ford Motor Company

General Specifications

Item	Specification
Manufacturer	Motorcraft
Voltage	12 Volt
Amps at -17.7°C (0°F) cold crank	650
Minutes-reserve capacity	130
Amps/hrs.-20 hour rate	72

SECTION 414-01 Battery, Mounting and Cables

VEHICLE APPLICATION: Mark VIII

SUBJECT	PAGE
DESCRIPTION AND OPERATION	
Battery and Cables	414-01-2
DIAGNOSIS AND TESTING	
Battery	414-01-3
REMOVAL AND INSTALLATION	
Battery	414-01-3
SPECIFICATIONS	414-01-6

Official Licensed Product
Ford Motor Company

DESCRIPTION AND OPERATION

Battery and Cables

The battery system consists of:

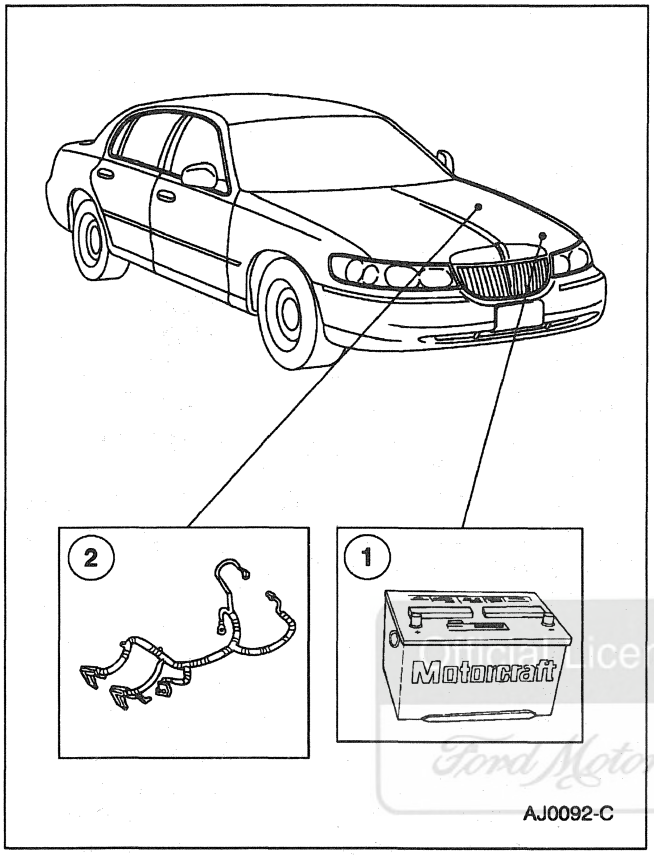

Item	Part Number	Description
1	10655	Battery
2	14300, 14301	Battery Cables

Vehicles are equipped with a 12 volt maintenance-free battery.

WARNING: BATTERIES (10655) NORMALLY PRODUCE EXPLOSIVE GASES WHICH CAN CAUSE PERSONAL INJURY. THEREFORE, DO NOT ALLOW FLAMES, SPARKS OR LIGHTED SUBSTANCES TO COME NEAR THE BATTERY. WHEN CHARGING OR WORKING NEAR A BATTERY, ALWAYS SHIELD YOUR FACE AND PROTECT YOUR EYES. ALWAYS PROVIDE VENTILATION.

WARNING: WHEN LIFTING A BATTERY, EXCESSIVE PRESSURE ON THE END WALLS COULD CAUSE ACID TO SPEW THROUGH THE VENT CAPS, RESULTING IN PERSONAL INJURY. LIFT WITH A BATTERY CARRIER OR WITH YOUR HANDS ON OPPOSITE CORNERS.

WARNING: KEEP OUT OF THE REACH OF CHILDREN. BATTERIES CONTAIN SULFURIC ACID. AVOID CONTACT WITH SKIN, EYES, OR CLOTHING. ALSO, SHIELD YOUR EYES WHEN WORKING NEAR THE BATTERY TO PROTECT AGAINST POSSIBLE SPLASHING OF THE ACID SOLUTION. IN CASE OF ACID CONTACT WITH SKIN OR EYES, FLUSH IMMEDIATELY WITH WATER FOR A MINIMUM OF 15 MINUTES AND GET PROMPT MEDICAL ATTENTION. IF ACID IS SWALLOWED, CALL A PHYSICIAN IMMEDIATELY.

Ford Motor Company strongly recommends that lead-acid batteries be returned to an authorized recycling facility for disposal.

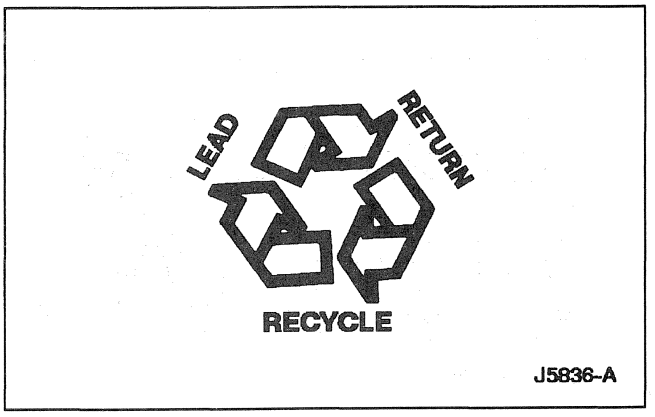

DIAGNOSIS AND TESTING

Battery

Refer to Section 414-00.

REMOVAL AND INSTALLATION

Battery

Removal

WARNING: BATTERIES (10655) NORMALLY PRODUCE EXPLOSIVE GASES WHICH CAN CAUSE PERSONAL INJURY. THEREFORE, DO NOT ALLOW FLAMES, SPARKS OR LIGHTED SUBSTANCES TO COME NEAR THE BATTERY. WHEN CHARGING OR WORKING NEAR A BATTERY, ALWAYS SHIELD YOUR FACE AND PROTECT YOUR EYES. ALWAYS PROVIDE VENTILATION.

WARNING: KEEP OUT OF THE REACH OF CHILDREN. BATTERIES CONTAIN SULFURIC ACID. AVOID CONTACT WITH SKIN, EYES, OR CLOTHING. ALSO, SHIELD YOUR EYES WHEN WORKING NEAR THE BATTERY TO PROTECT AGAINST POSSIBLE SPLASHING OF THE ACID SOLUTION. IN CASE OF ACID CONTACT WITH SKIN OR EYES, FLUSH IMMEDIATELY WITH WATER FOR A MINIMUM OF 15 MINUTES AND GET PROMPT MEDICAL ATTENTION. IF ACID IS SWALLOWED, CALL A PHYSICIAN IMMEDIATELY.

Official Licensed Parts
Ford Motor Company

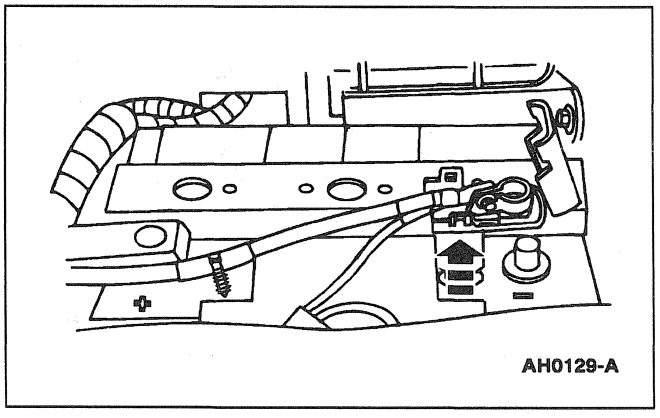

1. Disconnect the battery ground cable (14301).

REMOVAL AND INSTALLATION (Continued)

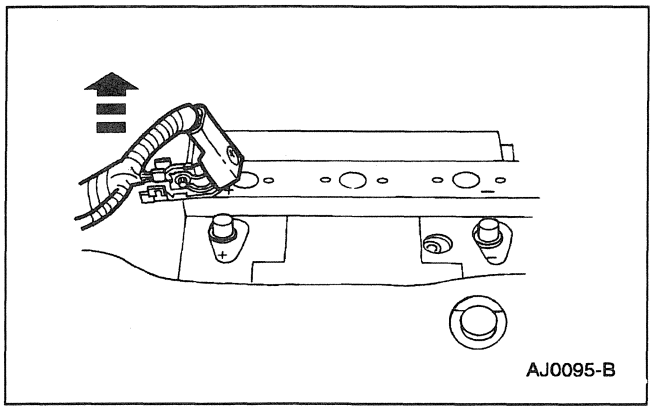

2. Disconnect the battery to starter relay cable (14300).

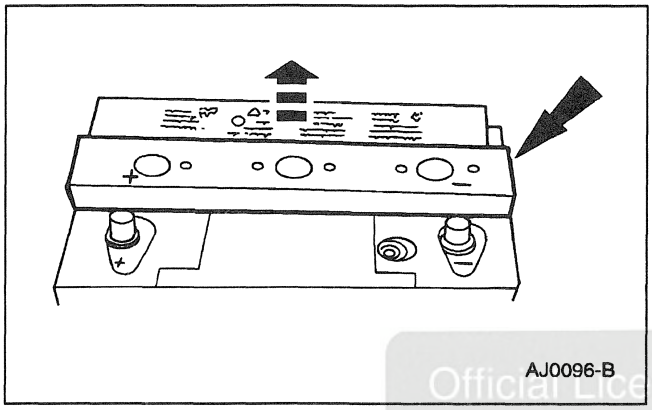

3. Remove the battery heat shield (10A682).

Official Licensed Product
Ford Motor Company

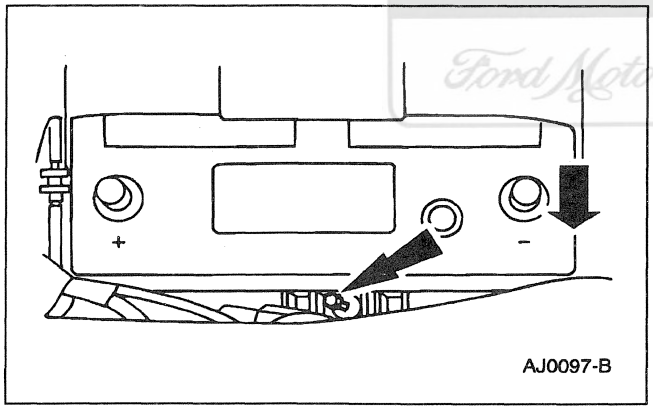

4. Remove the battery hold down clamp (10718).

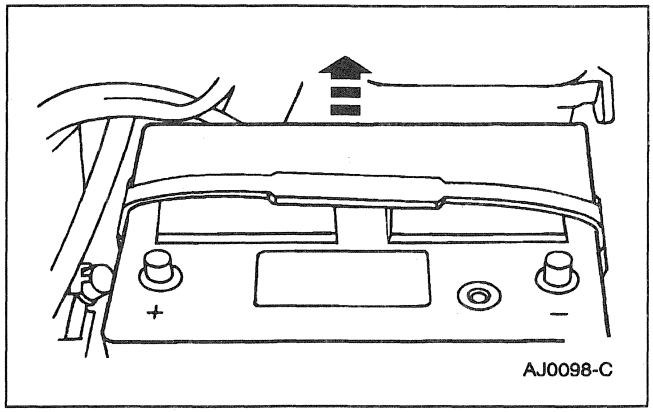

5. **WARNING: WHEN LIFTING A BATTERY, EXCESSIVE PRESSURE ON THE END WALLS COULD CAUSE ACID TO LEAK OUT THROUGH THE VENT CAPS, RESULTING IN PERSONAL INJURY, DAMAGE TO THE VEHICLE OR THE BATTERY.**

   Remove the battery.

REMOVAL AND INSTALLATION (Continued)

Installation

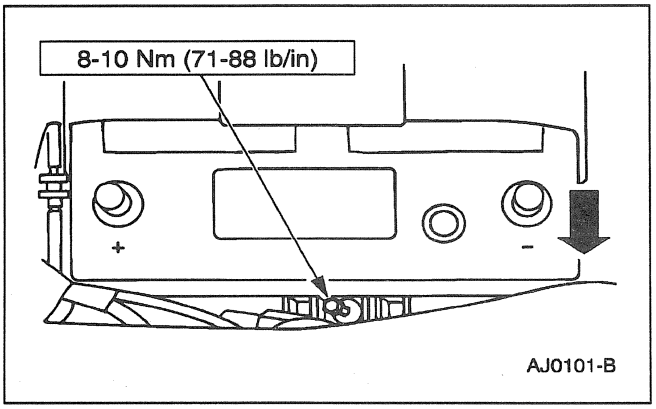

1. Position the battery on the battery tray (10732) and install the battery hold down clamp.

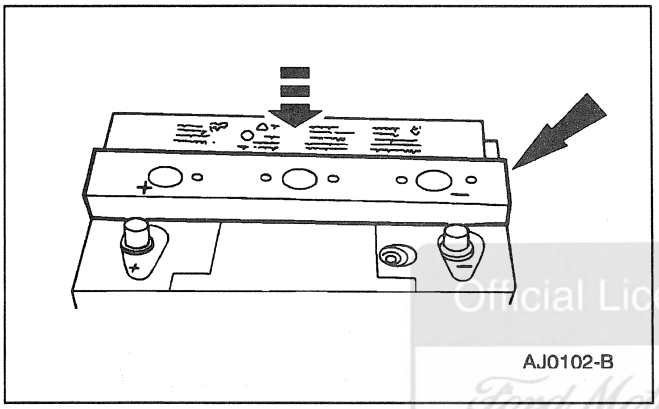

2. Install the battery heat shield.

Official Licensed Product
Ford Motor Company

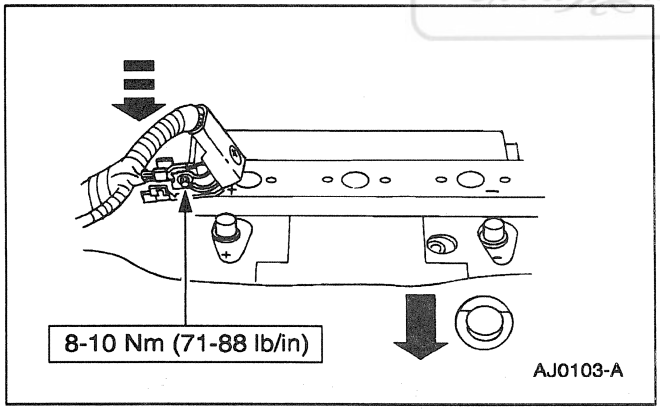

3. Connect the battery to starter relay cable.

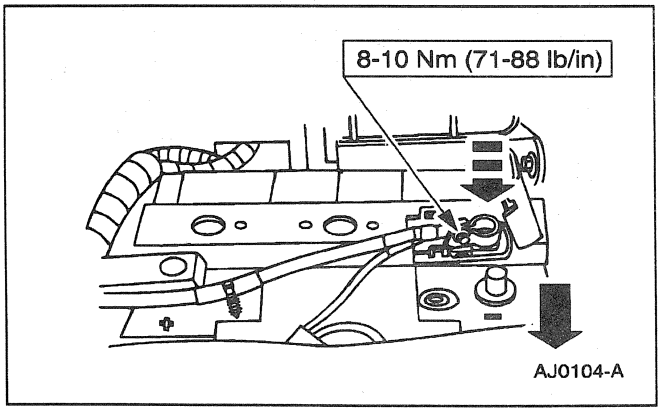

4. **NOTE:** When the battery is disconnected and reconnected, some abnormal drive symptoms may occur while the vehicle relearns it's adaptive strategy. The vehicle may need to be driven 16 km (10 miles) or more to relearn the strategy.

   Connect the battery ground cable.

SPECIFICATIONS

General Specifications

Item	Specification
Manufacturer	Motorcraft
Voltage	12 Volt
Amps at -17.7°C (0°F) cold crank	650
Minutes-reserve capacity	130
Amps/hrs.-20 hour rate	72
Location	Left Front of Engine Compartment

Torque Specifications

Description	Nm	Lb/In
Battery Cable Terminals	8-10	71-88
Battery Hold-Down Clamp Bolts	8-10	71-88

Official Licensed Product
Ford Motor Company

SECTION 414-02 Generator and Regulator

VEHICLE APPLICATION: Mark VIII

SUBJECT	PAGE
DESCRIPTION AND OPERATION	
Generator	414-02-2
DIAGNOSIS AND TESTING	
Generator	414-02-2
REMOVAL AND INSTALLATION	
Generator	414-02-2
SPECIFICATIONS	414-02-5

Official Licensed Product
Ford Motor Company

DESCRIPTION AND OPERATION

Generator

The generator and voltage regulator assembly located as follows:

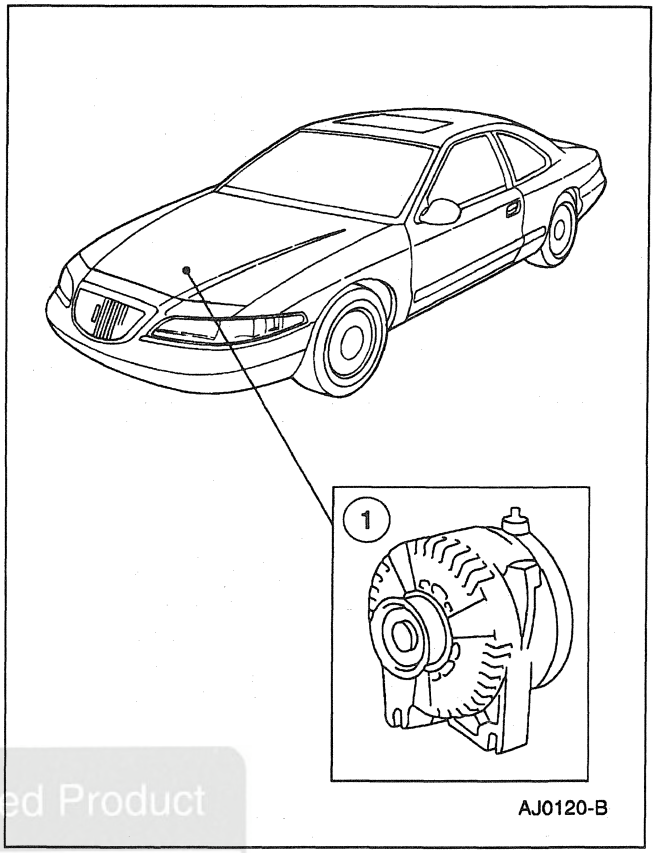

Official Licensed Product
Ford Motor Company

Item	Part Number	Description
1	10300	Generator

DIAGNOSIS AND TESTING

Generator

Refer to Section 414-00.

REMOVAL AND INSTALLATION

Generator

Removal

1. Disconnect the battery ground cable (14301).

REMOVAL AND INSTALLATION (Continued)

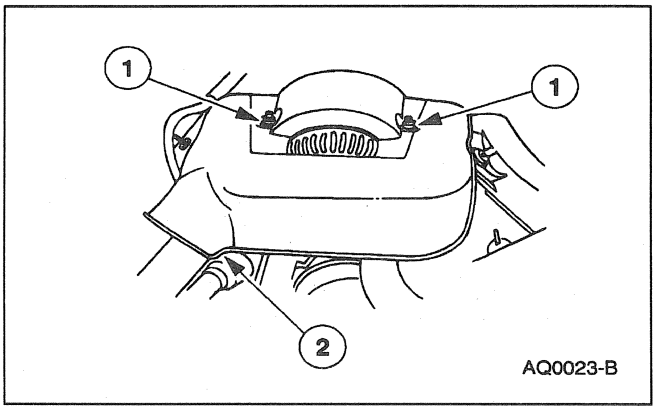

2. Remove the generator cover.
   1 Remove the nuts.
   2 Remove the generator cover.

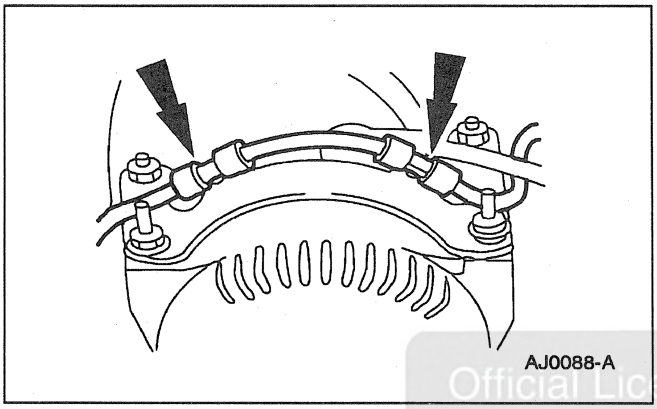

3. Remove the pushpins and the wiring harness.

Official Licensed Product
Ford Motor Company

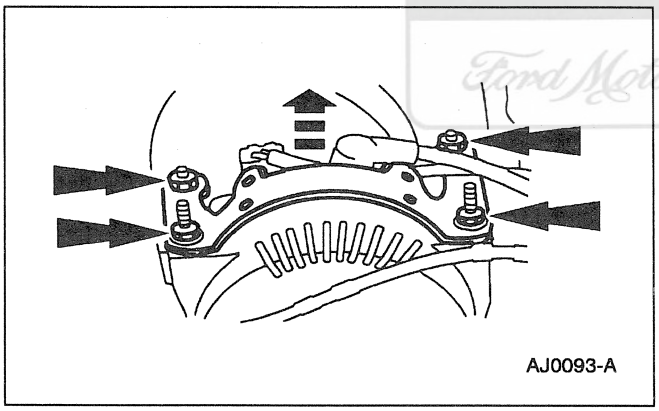

4. Remove the nuts and the stud bolts and generator mounting bracket (10153).

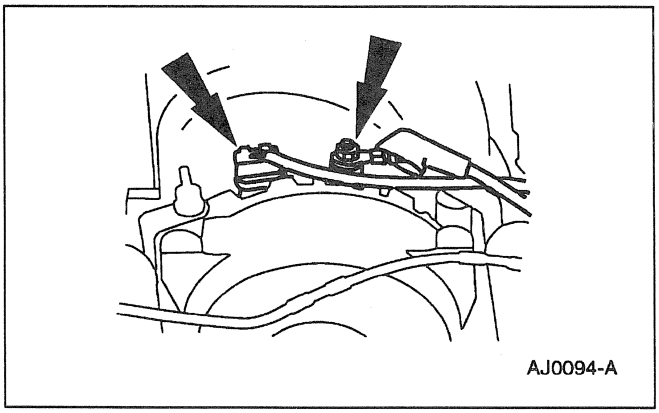

5. Disconnect the electrical connectors.

6. Release the belt tension.

REMOVAL AND INSTALLATION (Continued)

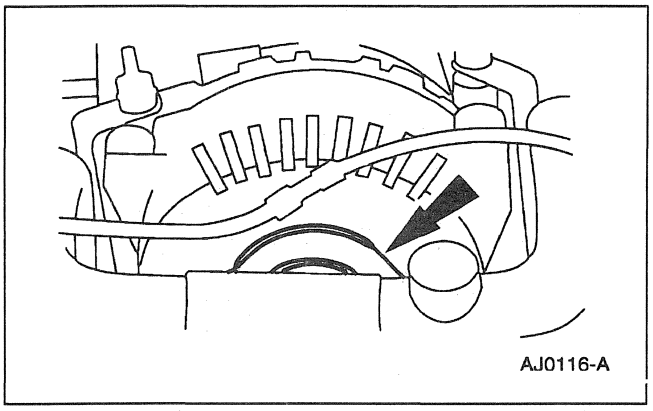

7. Release the belt from the generator (GEN)(10300).

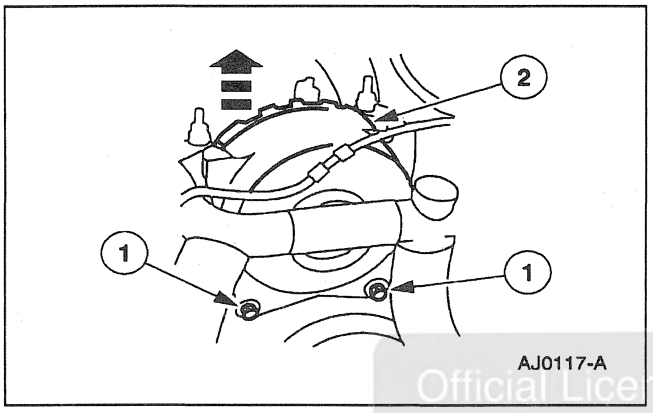

8. Remove the generator.
   1 Loosen the bolts.
   2 Pull the generator straight up to remove from the vehicle.

Official Licensed Product
Ford Motor Company

Installation

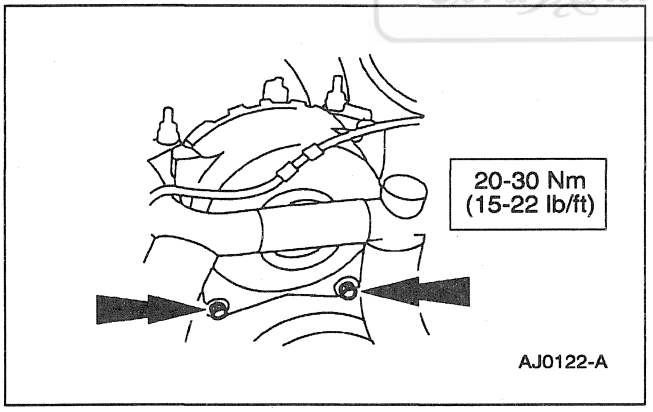

1. Follow the removal procedure in reverse order.

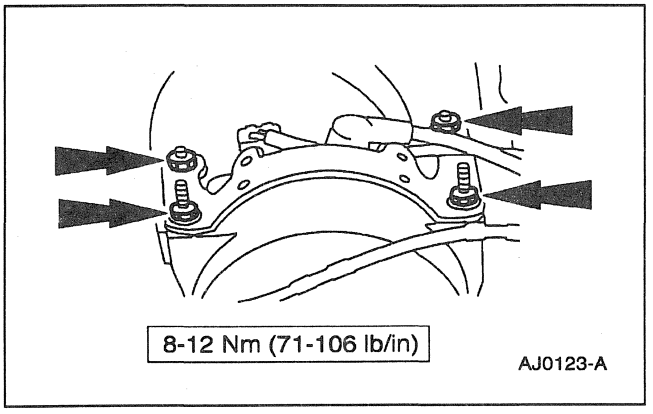

SPECIFICATIONS

General Specifications

Item	Specification
Rating (gen. crank/rev.)	(130 AMP/MAX)
Voltage Regulator Type (10316)	Electronic Integral with Generator

Torque Specifications

Description	Nm	Lb/Ft	Lb/In
Generator Support Bracket Bolts	8-12	—	71-106
Generator Assembly Through Bolts	20-30	15-22	—

Official Licensed Product
Ford Motor Company

SECTION 415-00 Audio Entertainment System — General Information

VEHICLE APPLICATION: Mark VIII

SUBJECT **PAGE**

DIAGNOSIS AND TESTING
Audio Entertainment System 415-00-2
Error Messages 415-00-3
Inspection and Verification 415-00-2
Pinpoint Tests 415-00-6
Symptom Chart 415-00-4
GENERAL PROCEDURES
Tape Player Cleaning 415-00-50

Official Licensed Product
Ford Motor Company

DIAGNOSIS AND TESTING

Audio Entertainment System

Refer to Electrical and Vacuum Troubleshooting Manual, Cell 130, Radio for schematic and connector information.

Special Tool(s)

ST1137-A	73 Digital Multimeter or equivalent 105-R0051

Inspection and Verification

1. Verify the customer concern by operating the audio system to duplicate the condition.
2. Inspect to determine if one of the following mechanical or electrical concerns apply:

Official Licensed Product
Ford Motor Company

DIAGNOSIS AND TESTING (Continued)

Visual Inspection Chart

Mechanical	Electrical
• Radio chassis physically damaged, misaligned, controls inoperative • Digital audio compact disc player physically damaged, misaligned, controls inoperative • Antenna, two-piece antenna cable or on-glass FM antenna and on-glass AM antenna (defroster grid on rear window) physically damaged, misaligned connections • Radio speakers mounting/speaker cones physically damaged, misaligned • Radio ignition interference capacitor, radio frequency interference suppression bond and radio receiver hood bonding strap misaligned, damaged or poor metal-to-metal contact • Mobile telephone handset, mobile telephone microphone, mobile telephone transceiver holder cradle physically damaged, misaligned	• Damaged fuse — Fuse junction panel fuse 2 (10A) — Fuse junction panel fuse 4 (10A) — Power distribution box fuse 10 (20A) • Disconnected electrical connectors • Circuitry open/shorted • Damaged ignition switch

3. If the inspection reveals obvious concern(s) that can be readily identified, repair as required.
4. If the concern(s) remains after the inspection, determine the condition(s) and proceed to Symptom Chart.

Error Messages

Both the premium analog cassette radio chassis and the digital audio compact disc radio chassis will display cassette tape player and CD player inoperative conditions. For code identification, refer to the following table.

Premium Analog Cassette Radio Chassis Tape Error Messages

Message	Possible Cause	Action
ERROR 0	An internal communication malfunction.	REMOVE the radio chassis and SEND it to an authorized Ford audio system repair facility. TEST the system after repair.
ERROR 1	A tape cartridge jam.	CLEAN the tape player using the Ford Tape Player Cleaning Cartridge.
ERROR 2	A tape eject or load malfunction.	REMOVE the radio chassis and SEND it to an authorized Ford audio system repair facility. TEST the system after repair.

10-Disc Digital Audio Compact Disc Changer Error Messages

Message	Possible Cause	Action
NO CD	No magazine is loaded or the magazine is empty.	REFER to the Symptom Chart.
BAD CD	The disc is unreadable.	REPLACE the disc.
TOO HOT	The mechanism is over 75° C (167° F).	ALLOW the unit to cool.
NO DJ	A CD changer to radio chassis communication malfunction or the vehicle is not equipped with a CD changer.	REFER to the Symptom Chart.

Official Licensed Product
Ford Motor Company

DIAGNOSIS AND TESTING (Continued)

Digital Audio Compact Disc Radio Chassis Error Messages

Message	Possible Cause	Action
NO CD	No disc in the slot.	LOAD the disc.
CD HOT	The mechanism is over 75° C (167° F).	ALLOW the unit to cool.
CD-ER 0001	The disc is loaded upside down or is unreadable.	REPLACE the disc.
CD-ER INIT	An internal communication malfunction.	SERVICE the radio chassis.
CD-ER 0002	Eject error.	SERVICE the radio chassis.

(Continued)

Digital Audio Compact Disc Radio Chassis Error Messages

Message	Possible Cause	Action
CD-ER 0100	A computer disc is loaded.	LOAD a Digital audio compact disc.
All Other Messages	Internal malfunctions.	REMOVE the radio chassis and SEND it to an authorized Ford audio system repair facility. TEST the system after repair.

Symptom Chart

Symptom Chart

Condition	Possible Source	Action
• The Radio Tape/Chassis Is Inoperative—Does Not Operate Properly	• Fuse. • Circuitry. • Radio chassis. • Ignition switch.	• GO to Pinpoint Test A.
• The CD Changer Is Inoperative—Does Not Operate Properly	• Fuse. • Circuitry. • Digital audio compact disc changer. • Radio chassis. • Ignition switch.	• GO to Pinpoint Test B.
• The CD Changer Display Is Blank—Does Not Operate Properly	• Fuse. • Circuitry. • Radio chassis. • Digital audio compact disc player. • Ignition switch.	• GO to Pinpoint Test C.
• Noisy Reception	• Suppression equipment. • Circuitry. • Radio antenna isolator. • Radio chassis.	• GO to Pinpoint Test D.
• Noisy Reception—Degraded AM Reception or Continuous Seek in AM	• Short to urethane on the rear glass. • Coaxial cable. • Radio antenna lead in cable. • Circuitry. • Radio chassis.	• GO to Pinpoint Test E.

Ford Licensed Product Ford Motor Company

DIAGNOSIS AND TESTING (Continued)

Symptom Chart (Continued)

Condition	Possible Source	Action
• Noisy Reception—Degraded FM Reception or Continuous Seek in FM	• Radio antenna lead in cable. • Short to urethane on the rear glass. • Circuitry. • Damaged rear glass FM antenna pattern. • Radio chassis.	• GO to Pinpoint Test F.
• Noisy Reception—FM Only	• FM signal out of range.	• INFORM customer of methods for obtaining best reception.
• Poor Quality/Distorted Sound From One or More Speakers (Not All Speakers)	• Circuitry. • Radio speakers. • Radio chassis. • Radio amplifier.	• GO to Pinpoint Test G.
• Poor Quality/Distorted Sound From All of the Speakers	• Circuitry. • Radio chassis. • Radio amplifier.	• GO to Pinpoint Test H.
• No Sound From One or More of the Speakers—Not All Speakers	• Circuitry. • Radio speakers. • Radio chassis. • Radio amplifier.	• GO to Pinpoint Test J.
• No Sound From All of the Speakers	• Circuitry. • Radio chassis. • Radio amplifier. • Radio speakers.	• GO to Pinpoint Test K.
• Tape Player Only Inoperative — Does Not Operate Properly	• Fuse. • Circuitry. • Radio chassis. • Tape player. • Ignition switch.	• REMOVE the radio chassis and SEND it to an authorized Ford audio system repair facility. TEST the system after repair.
• Radio Chassis Display Blank — Radio Chassis Operates	• Ground circuit. • Fuse(s). • Power circuitry. • Radio chassis.	• REMOVE the radio chassis and SEND it to an authorized Ford audio system repair facility. TEST the system after repair.
• Radio Chassis/Tape Player Display Blank — Radio Chassis/Tape Player Operates	• Fuse. • Circuitry. • Radio chassis. • Tape player. • Ignition switch.	• REMOVE the radio chassis and SEND it to an authorized Ford audio system repair facility. TEST the system after repair.

Ford Motor Company

DIAGNOSIS AND TESTING (Continued)

Pinpoint Tests

PINPOINT TEST A: THE RADIO TAPE/CHASSIS IS INOPERATIVE—DOES NOT OPERATE PROPERLY

TEST CONDITIONS	TEST DETAILS/RESULTS/ACTIONS
A1 CHECK THE OPERATION OF THE RADIO CHASSIS	
1 2 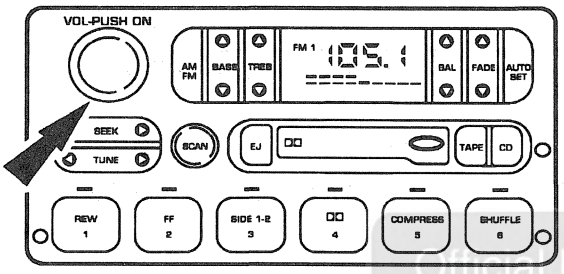 AK1014-A	2 Press the radio power ON button. • Is the display illuminated? → **Yes** GO to **A2**. → **No** GO to **A4**.
A2 CHECK FOR SOUND COMING FROM THE RADIO SPEAKERS	
1 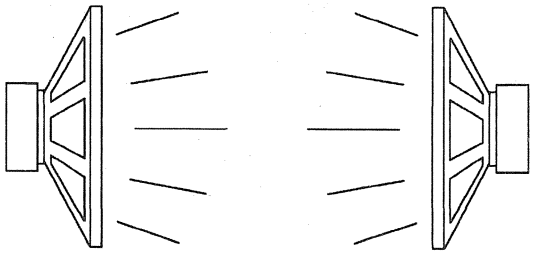 AK1015-A	1 Verify that sound is coming from the radio speakers. • Is sound coming from the radio speakers? → **Yes** GO to **A3**. → **No** GO to Pinpoint Test K.
A3 CONTROL AND FEATURES TEST	
	1 Refer to the Audio Guide for audio system controls.

(Continued)

Official Licensed Product

DIAGNOSIS AND TESTING (Continued)

PINPOINT TEST A: THE RADIO TAPE/CHASSIS IS INOPERATIVE—DOES NOT OPERATE PROPERLY (Continued)

TEST CONDITIONS	TEST DETAILS/RESULTS/ACTIONS
A3 CONTROL AND FEATURES TEST (Continued)	
	2 Verify that all the controls and features operate properly. • Do all the controls and features operate properly? → **Yes** The system is OK. → **No** GO to **A4**.
A4 CHECK FUSE JUNCTION PANEL FUSE 4 (10A)	
1 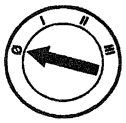 2 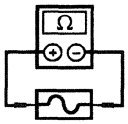 Fuse Junction Panel Fuse 4 (10A)	• Is the fuse OK? → **Yes** REINSTALL the fuse. GO to **A5**. → **No** REPLACE the fuse. TEST the system for normal operation. If the fuse fails again, CHECK for short to ground. REPAIR as necessary.

Official Licensed Product
Ford Motor Company

(Continued)

DIAGNOSIS AND TESTING (Continued)

PINPOINT TEST A: THE RADIO TAPE/CHASSIS IS INOPERATIVE—DOES NOT OPERATE PROPERLY (Continued)

TEST CONDITIONS	TEST DETAILS/RESULTS/ACTIONS
A5 CHECK FOR IGNITION POWER	
 Radio Chassis C257 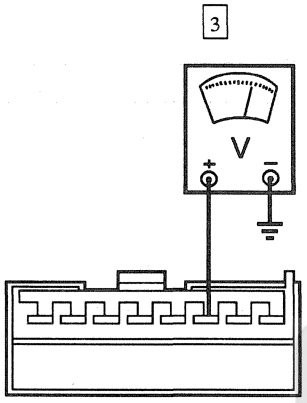 AK1090-A	3 Connect a voltmeter between radio chassis C257-6, circuit 1002 (BK/PK), and ground. • Is the voltage 10 volts or greater? → **Yes** GO to **A6**. → **No** REPAIR circuit 1002 (BK/PK). TEST the system for normal operation.
A6 CHECK THE FUSE JUNCTION PANEL FUSE 2 (10A)	
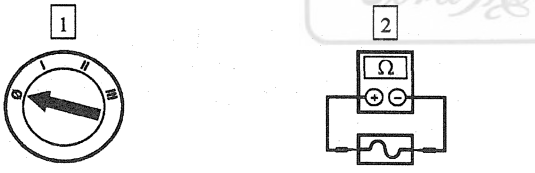 Fuse Junction Panel Fuse 2 (10A)	• Is the fuse OK? → **Yes** REINSTALL the fuse. GO to **A7**. → **No** REPLACE the fuse. TEST the system for normal operation. If the fuse fails again, CHECK for short to ground. REPAIR as necessary.

(Continued)

Official Licensed Product Ford Motor Company

DIAGNOSIS AND TESTING (Continued)

PINPOINT TEST A: THE RADIO TAPE/CHASSIS IS INOPERATIVE—DOES NOT OPERATE PROPERLY (Continued)

TEST CONDITIONS	TEST DETAILS/RESULTS/ACTIONS
A7 CHECK FOR MEMORY POWER	
1 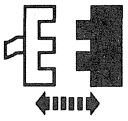 Radio Chassis C257 2 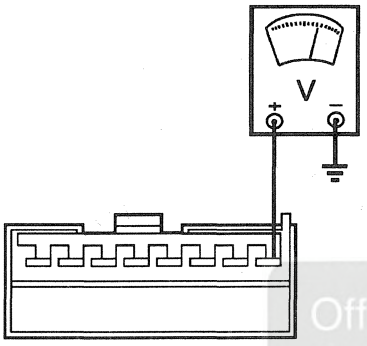 AK1091-A	2 Connect a voltmeter between radio chassis C257-8, circuit 729 (R/W), and ground. • Is the voltage 10 volts or greater? → **Yes** GO to **A8**. → **No** REPAIR circuit 729 (R/W). TEST the system for normal operation.
A8 CHECK CIRCUIT 57 (BK)	
1 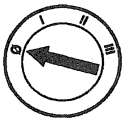 2 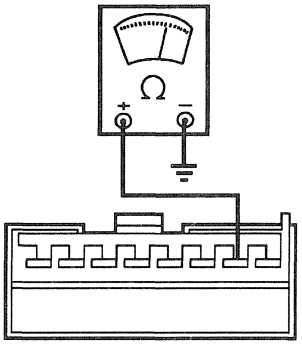 AK1092-A	2 Connect an ohmmeter between radio chassis C257-7, circuit 57 (BK), and ground. • Is the resistance 5 ohms or less? → **Yes** GO to **A9**. → **No** REPAIR circuit 57 (BK). TEST the system for normal operation.

(Continued)

Official Licensed Product
Ford Motor Company

DIAGNOSIS AND TESTING (Continued)

PINPOINT TEST A: THE RADIO TAPE/CHASSIS IS INOPERATIVE—DOES NOT OPERATE PROPERLY (Continued)

TEST CONDITIONS	TEST DETAILS/RESULTS/ACTIONS
A9 CHECK THE GROUND	
1 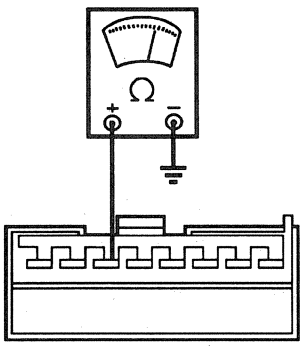 AK1093-A	1 Connect an ohmmeter between radio chassis C257-3, circuit 694 (BK/LG), and ground. • Is the resistance 5 ohms or less? → **Yes** REMOVE the radio chassis and SEND it to an authorized Ford audio system repair facility. TEST the system after repair. → **No** REPAIR circuit 694 (BK/LG). TEST the system for normal operation.

PINPOINT TEST B: THE CD CHANGER IS INOPERATIVE—DOES NOT OPERATE PROPERLY

TEST CONDITIONS	TEST DETAILS/RESULTS/ACTIONS
B1 CHECK THE OPERATION OF THE RADIO CHASSIS	
1 2 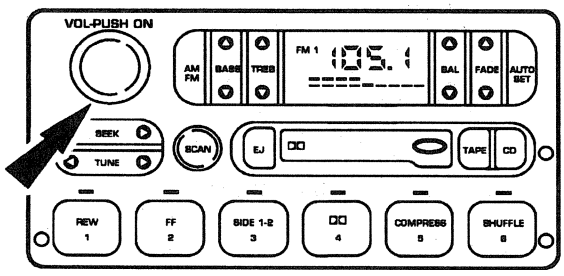 AK1014-A	2 Press the VOL-PUSH ON button. • Is the display illuminated? → **Yes** GO to **B2**. → **No** GO to Pinpoint Test A.

Official Licensed Product
Ford Motor Company

(Continued)

DIAGNOSIS AND TESTING (Continued)

PINPOINT TEST B: THE CD CHANGER IS INOPERATIVE—DOES NOT OPERATE PROPERLY (Continued)

TEST CONDITIONS	TEST DETAILS/RESULTS/ACTIONS
B2 CHECK FOR SOUND COMING FROM THE RADIO SPEAKERS	
1 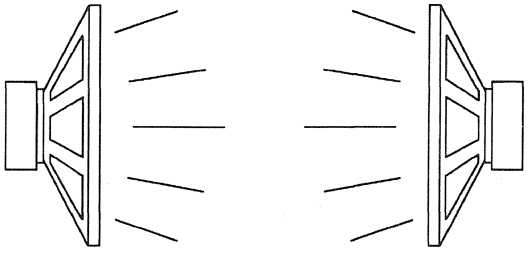 AK1015-A	1 Verify that sound is coming from the radio speakers. • Is sound coming from any of the radio speakers? → **Yes** GO to **B3**. → **No** GO to Pinpoint Test K.
B3 CHECK THE CD CHANGER MAGAZINE LOADING OPERATION	
1 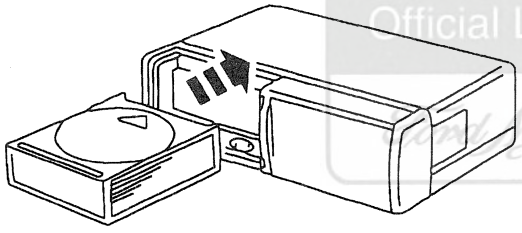 AK1114-A	1 Insert a known good magazine loaded with at least two CDs into the CD changer opening and verify automatic power loading. • Does the power loading function operate properly? → **Yes** GO to **B6**. → **No** GO to **B4**.

Official Licensed Product Ford Motor Company

(Continued)

DIAGNOSIS AND TESTING (Continued)

PINPOINT TEST B: THE CD CHANGER IS INOPERATIVE—DOES NOT OPERATE PROPERLY (Continued)

TEST CONDITIONS	TEST DETAILS/RESULTS/ACTIONS
B4 CHECK FOR POWER TO THE CD CHANGER	
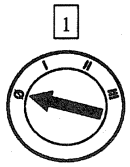 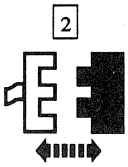 Compact Disc Changer C445 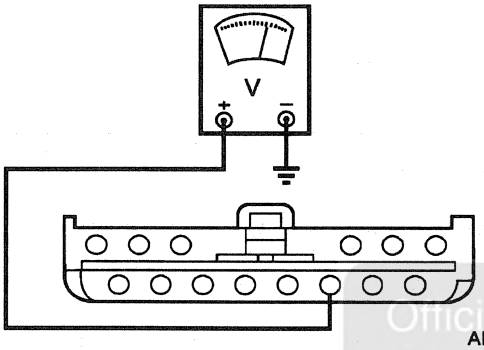 AK1115-A	3 Connect a voltmeter between CD changer C445-3, circuit 797 (LG/P), and ground. • Is the voltage 10 volts or greater? → **Yes** GO to **B5**. → **No** REPAIR circuit 797 (LG/P). TEST the system for normal operation.
B5 CHECK THE CD CHANGER GROUND	
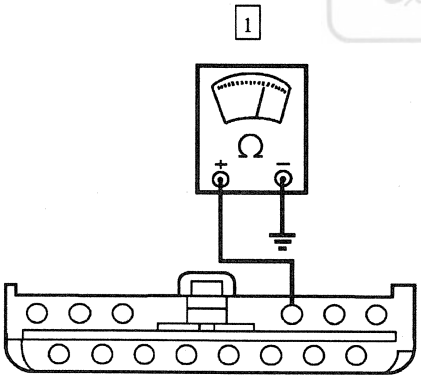 AK1116-A	1 Connect an ohmmeter between CD changer C445-11, circuit 694 (BK/LG), and ground. • Is the resistance 5 ohms or less? → **Yes** REMOVE the radio chassis and SEND it to an authorized Ford audio system repair facility. TEST the system after repair. → **No** REPAIR circuit 694 (BK/LG). TEST the system for normal operation.

Official Licensed Product Ford Motor Company

(Continued)

DIAGNOSIS AND TESTING (Continued)

PINPOINT TEST B: THE CD CHANGER IS INOPERATIVE—DOES NOT OPERATE PROPERLY (Continued)

TEST CONDITIONS	TEST DETAILS/RESULTS/ACTIONS
B6 CHECK THE OPERATION OF THE CD CHANGER	
1 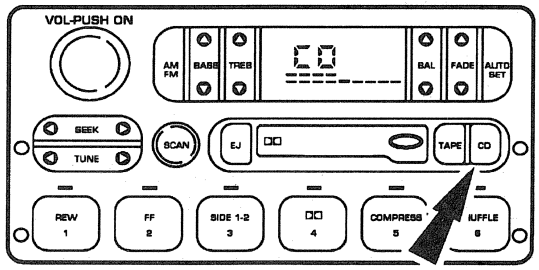 AK1117-A	1 Press the CD button. • Does the display indicate the disc and track number? → **Yes** GO to **B8**. → **No** GO to **B7**.
B7 CHECK THE CIRCUITS BETWEEN THE UNITS	
1 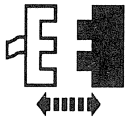 CD Changer C445 2 Radio Chassis 258	3 Measure the resistance between CD changer C445, and radio chassis C258; and between CD changer C445, and ground as follows:

Circuit	CD changer C445 Pin	Radio Chassis C258 Pin
833 (T)	1	1
1068 (LG/BK)	2	6
798 ((LG/R)	4	15
799 (O/BK)	6	7
690 (GY)	7	8
832 (LB/PK)	9	9
856 (P)	13	16

Ford Motor Company

(Continued)

DIAGNOSIS AND TESTING (Continued)

PINPOINT TEST B: THE CD CHANGER IS INOPERATIVE—DOES NOT OPERATE PROPERLY (Continued)

TEST CONDITIONS	TEST DETAILS/RESULTS/ACTIONS
B7 CHECK THE CIRCUITS BETWEEN THE UNITS (Continued)	
	• Is the resistance between CD changer C445 and radio chassis C258 less than 5ohms; and between CD changer C445 and ground greater than 10,000 ohms? → **Yes** GO to **B8**. → **No** Repair the circuit(s) in question. TEST the system for normal operation.
B8 SUBSTITUTE A KNOWN GOOD CD CHANGER	
2 Radio Chassis C258 3 Compact Disc Changer C445 4	1 Substitute a known good CD changer. • Does the system operate properly? → **Yes** REMOVE the CD changer and SEND it to an authorized Ford audio system repair facility. TEST the system after repair. → **No** REMOVE the radio chassis and SEND it to an authorized Ford audio system repair facility. TEST the system after repair.

Official Licensed Product
Ford Motor Company®

PINPOINT TEST C: CD CHANGER DISPLAY IS BLANK — DOES NOT OPERATE PROPERLY

TEST CONDITIONS	TEST DETAILS/RESULTS/ACTIONS
C1 CHECK OPERATION OF THE CD CHANGER	
1 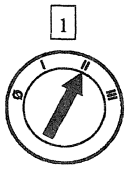	2 Turn on the radio.

(Continued)

DIAGNOSIS AND TESTING (Continued)

PINPOINT TEST C: CD CHANGER DISPLAY IS BLANK — DOES NOT OPERATE PROPERLY (Continued)

TEST CONDITIONS	TEST DETAILS/RESULTS/ACTIONS
C1 CHECK OPERATION OF THE CD CHANGER (Continued)	
	3 Verify the radio chassis is operating properly. Refer to the Owner Guide. 4 Verify that the CD changer power loading function is operating properly. Refer to the Owner Guide for CD loading instructions. • Is the CD changer information displayed on the radio display? → **Yes** GO to Pinpoint Test B. → **No** GO to **C2**.
C2 CHECK FOR SOUND COMING FROM THE RADIO SPEAKERS	
	1 Insert a known good CD and press the CD button. 2 Verify the speaker operation. • Is sound coming from the speakers? → **Yes** GO to **C3**. → **No** GO to Pinpoint Test B.
C3 CHECK RADIO CHASSIS DISPLAY	
	1 Press the AM/FM button. 2 Verify that the radio chassis display is illuminated. • Is the radio chassis display illuminated? → **Yes** GO to **C4**. → **No** GO to Pinpoint Test A.

(Continued)

Official Licensed Product Ford Motor Company

DIAGNOSIS AND TESTING (Continued)

PINPOINT TEST C: CD CHANGER DISPLAY IS BLANK — DOES NOT OPERATE PROPERLY (Continued)

TEST CONDITIONS	TEST DETAILS/RESULTS/ACTIONS
C4 CHECK CIRCUIT 833 (T)	
1 2 Compact Disc Changer C445 3 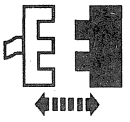 Radio Chassis C258	4 Measure the resistance between compact disc changer C445-1, circuit 833 (T), and radio chassis C258-1, circuit 833 (T); and between compact disc changer C445-1, circuit 833 (T), and ground. • Is the resistance less than 5 ohms between the compact disc changer and the radio chassis; and greater than 10,000 ohms between the compact disc changer, and ground? → **Yes** REMOVE the CD changer and SEND it to an authorized Ford audio system repair facility. TEST the system after repair. → **No** REPAIR circuit 833 (T). TEST the system for normal operation.

Official Licensed Publication
Ford Motor Company

PINPOINT TEST D: NOISY RECEPTION

TEST CONDITIONS	TEST DETAILS/RESULTS/ACTIONS
D1 CHECK THE SUPPRESSION EQUIPMENT	
1 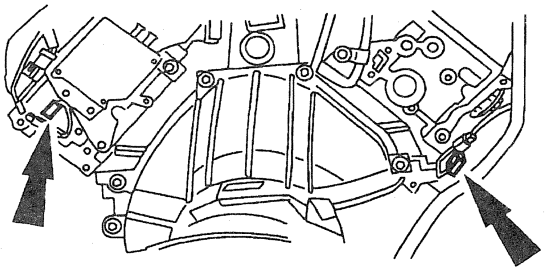 AK1135-A	1 Visually inspect the right and left radio ignition interference capacitors.

(Continued)

DIAGNOSIS AND TESTING (Continued)

PINPOINT TEST D: NOISY RECEPTION (Continued)

TEST CONDITIONS	TEST DETAILS/RESULTS/ACTIONS
D1 CHECK THE SUPPRESSION EQUIPMENT (Continued)	
2 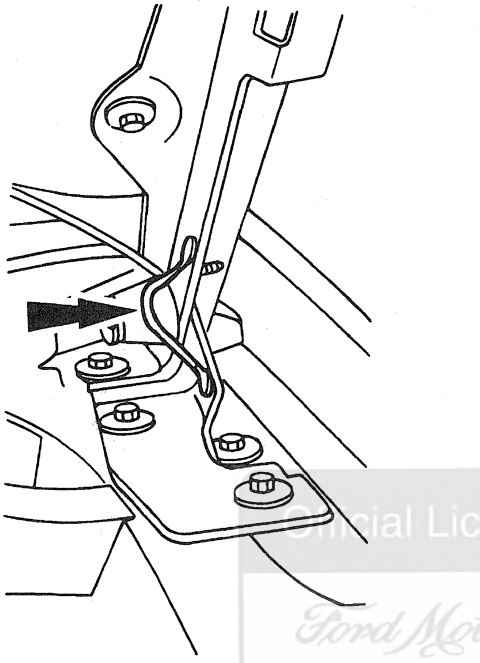 AK1136-A	2 Visually inspect the right and left hood bonding straps.
3 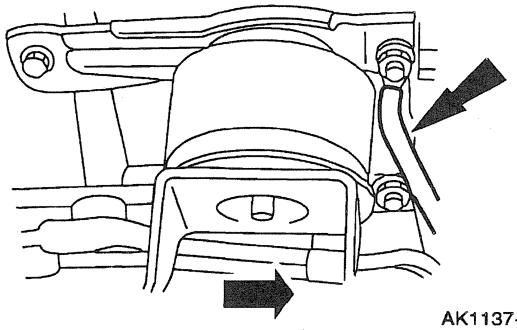 AK1137-A	3 Visually inspect the radio frequency interference suppression bond to the engine mount stud.

Official Licensed Product Ford Motor Company

(Continued)

DIAGNOSIS AND TESTING (Continued)

PINPOINT TEST D: NOISY RECEPTION (Continued)

TEST CONDITIONS	TEST DETAILS/RESULTS/ACTIONS
D1 CHECK THE SUPPRESSION EQUIPMENT (Continued)	
4 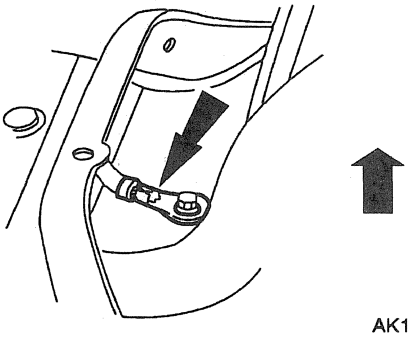 AK1138-A	4 Visually inspect the radio frequency interference suppression bond to the chassis ground. • Are all of the suppression components in place with good metal-to-metal contact? → **Yes** GO to **D2**. → **No** REPLACE or REPAIR the suppression components. TEST the system for normal operation.
D2 CHECK THE RADIO IGNITION INTERFERENCE CAPACITORS	
1 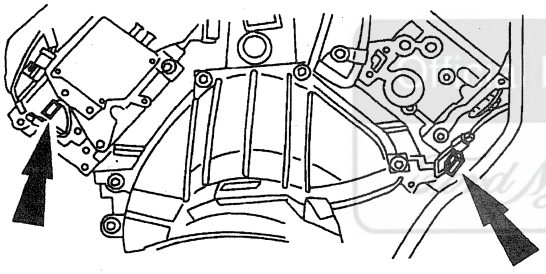 AK1135-A	1 Temporarily install known good radio ignition interference capacitors in place of the existing radio ignition interference capacitor. • Is the noise eliminated? → **Yes** REPLACE the radio ignition interference capacitors. TEST the system for normal operation. → **No** GO to **D3**.
D3 CHECK FOR GENERATOR INTERFERENCE	
1 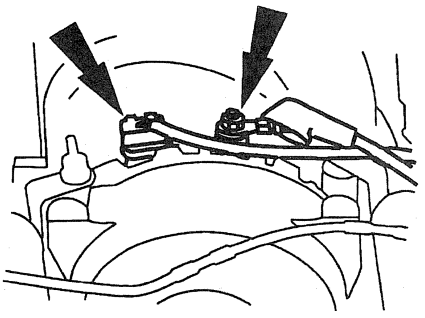 AJ0094-A	1 Disconnect the generator wiring from the voltage regulator. • Is the noise eliminated? → **Yes** REPLACE the generator; REFER to Section 414-02. → **No** GO to **D4**.

(Continued)

DIAGNOSIS AND TESTING (Continued)

PINPOINT TEST D: NOISY RECEPTION (Continued)

TEST CONDITIONS	TEST DETAILS/RESULTS/ACTIONS
D4 CHECK THE AM RECEPTION WITH A SUBSTITUTE RADIO ANTENNA	
1 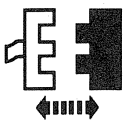 Radio Chassis Antenna Cable	2 Temporarily install a known good radio antenna to the radio chassis. • Is the noise eliminated? → **Yes** GO to Pinpoint Test E. → **No** GO to **D5**.
D5 CHECK THE BODY COMPONENT GROUNDS	
	1 Use a jumper wire to ground the following components to the frame: • Engine. • Fenders. • Quarter panels. • Body sheet metal. • Exhaust system. • Is the noise eliminated? → **Yes** INSTALL a permanent ground strap to the component. TEST the system for normal operation. → **No** REMOVE the radio chassis and SEND it to an authorized Ford audio system repair facility. TEST the system after repair.

Official Licensed Ford Motor Company

DIAGNOSIS AND TESTING (Continued)

PINPOINT TEST E: NOISY RECEPTION — DEGRADED AM RECEPTION OR CONTINUOUS SEEK IN AM

TEST CONDITIONS	TEST DETAILS/RESULTS/ACTIONS
E1 CHECK THE CONNECTIONS ON THE REAR WINDOW DEFROSTER GRID	
1 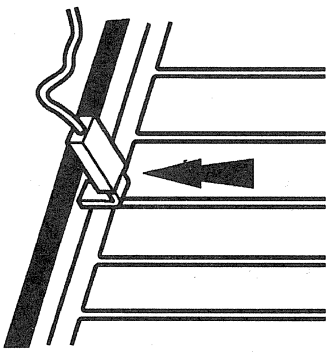 AK1142-A	1 Visually inspect the right and left side rear window defroster grid connections. • Are the connections tight and free of dirt or corrosion? → **Yes** GO to **E2**. → **No** REPAIR the wire terminals and the glass mounted connector tabs. TEST the system for normal operation.
E2 CHECK THE RADIO ANTENNA ISOLATOR CIRCUIT	
1 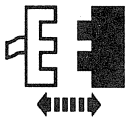 Radio Chassis Antenna Cable 2 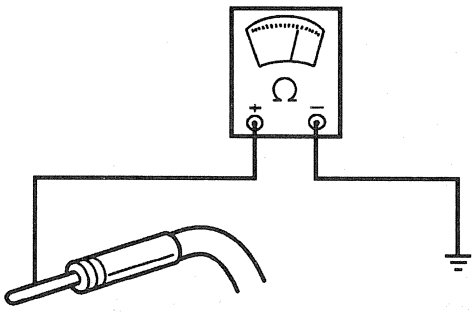 AK1143-A	2 Connect an ohmmeter between the antenna cable center conductor and ground. • Is the resistance between 300-360 ohms? → **Yes** GO to **E4**. → **No** GO to **E3**.

Official Licensed Product
Ford Motor Company

(Continued)

DIAGNOSIS AND TESTING (Continued)

PINPOINT TEST E: NOISY RECEPTION — DEGRADED AM RECEPTION OR CONTINUOUS SEEK IN AM (Continued)

TEST CONDITIONS	TEST DETAILS/RESULTS/ACTIONS
E3 CHECK THE ANTENNA CABLE CENTER CONDUCTOR	
1 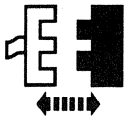 Radio Antenna Isolator Antenna Cable 2 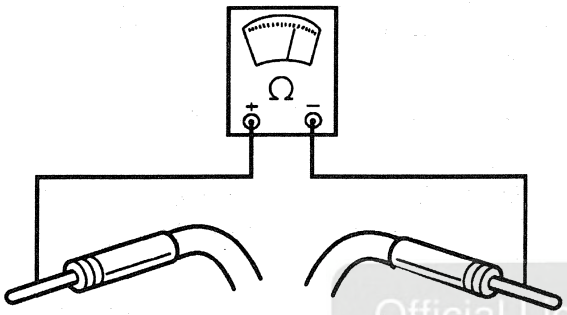 AK1144-A	2 Connect an ohmmeter between the center conductor of the antenna cable at the radio chassis and the center conductor of the antenna cable at the radio antenna isolator. • Is the resistance less than 5 ohms? → **Yes** REPLACE the radio antenna isolator. TEST the system for normal operation. → **No** REPAIR the antenna cable. TEST the system for normal operation.
E4 CHECK THE ANTENNA CABLE TO RADIO ANTENNA ISOLATOR GROUND CIRCUIT	
1 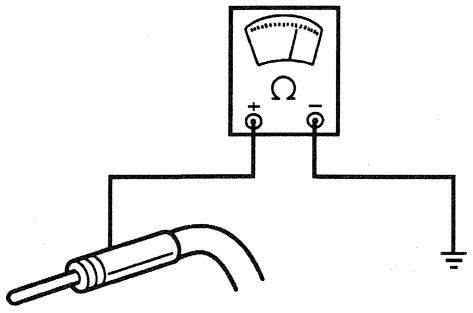 AK1145-A	1 Connect an ohmmeter between the antenna cable outer conductor and ground. • Is the resistance 3 ohms or less? → **Yes** GO to **E6**. → **No** GO to **E5**.

Official Licensed Publication
Ford Motor Company

(Continued)

DIAGNOSIS AND TESTING (Continued)

PINPOINT TEST E: NOISY RECEPTION — DEGRADED AM RECEPTION OR CONTINUOUS SEEK IN AM (Continued)

TEST CONDITIONS	TEST DETAILS/RESULTS/ACTIONS
E5 CHECK THE ANTENNA CABLE OUTER CONDUCTOR	
1 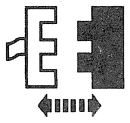 Radio Antenna Isolator Antenna Cable 2 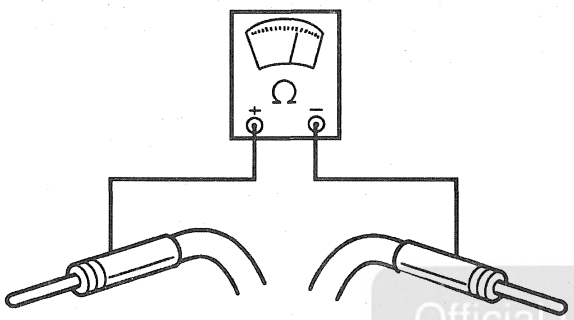 AK1146-A	2 Connect an ohmmeter between the outer conductor of the antenna cable at the radio chassis and the outer conductor of the antenna cable at the radio antenna isolator. • Is the resistance less than 5 ohms? → **Yes** REPLACE the radio antenna isolator. TEST the system for normal operation. → **No** REPAIR the antenna cable. TEST the system for normal operation.
E6 CHECK FOR A SHORT TO THE URETHANE	
1 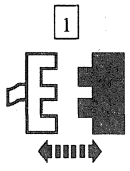 Right and Left Side Rear Window Defroster Grid 2 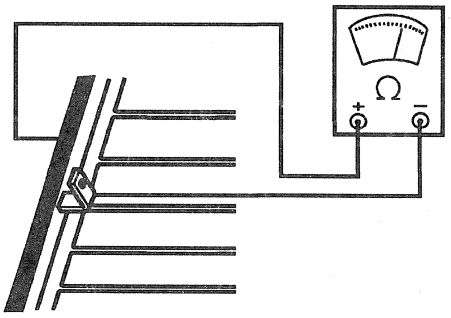 AK1147-A	2 Connect an ohmmeter between both the right and left grid connectors and the urethane retaining the back window glass. • Is the resistance greater than 10 K ohms? → **Yes** GO to **E7**. → **No** REPAIR the rear window mounting urethane for a short to the defroster grid. TEST the system for normal operation.

Official Licensed Ford Motor Company

(Continued)

DIAGNOSIS AND TESTING (Continued)

PINPOINT TEST E: NOISY RECEPTION — DEGRADED AM RECEPTION OR CONTINUOUS SEEK IN AM (Continued)

TEST CONDITIONS	TEST DETAILS/RESULTS/ACTIONS
E7 CHECK FOR DAMAGED DEFROSTER GRID LINES	
1 2 Right and Left Side Rear Window Defroster Grid	
3 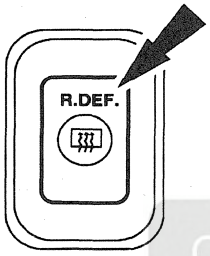 AK1370-A	3 Turn on the rear window defrost switch.
4 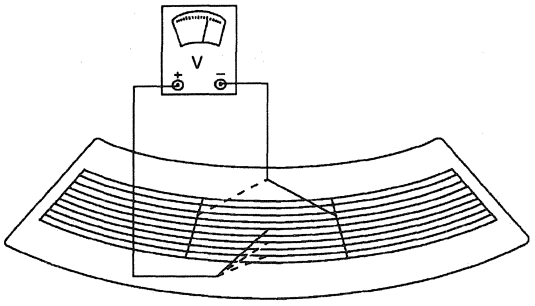 AK1371-A	4 Connect a voltmeter between the center of each horizontal grid line and both adjacent vertical lines in each of the three grid sections. • Is the voltage 1.5 volts or greater? → **Yes** GO to **E8**. → **No** REPAIR the grid line in question for an open circuit between the test probes. TEST the system for normal operation.

Official Licensed Product
Ford Motor Company

(Continued)

DIAGNOSIS AND TESTING (Continued)

PINPOINT TEST E: NOISY RECEPTION — DEGRADED AM RECEPTION OR CONTINUOUS SEEK IN AM (Continued)

TEST CONDITIONS	TEST DETAILS/RESULTS/ACTIONS
E8 CHECK THE RADIO ANTENNA ISOLATOR GROUND TO THE DEFROSTER GRID	
1 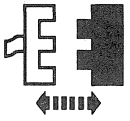 Radio Antenna Isolator Defroster Supply Connection 2 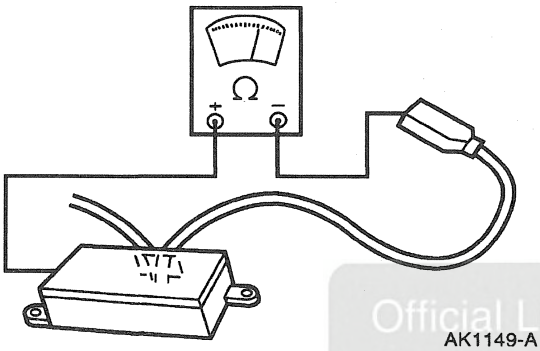 AK1149-A	2 Connect an ohmmeter between the right grid supply wire connector and the radio antenna isolator case. • Is the resistance less than 5 ohms? → **Yes** GO to **E9**. → **No** REPLACE the radio antenna isolator. TEST the system for normal operation.
E9 CHECK THE RADIO ANTENNA ISOLATOR GROUND TO THE VEHICLE	
1 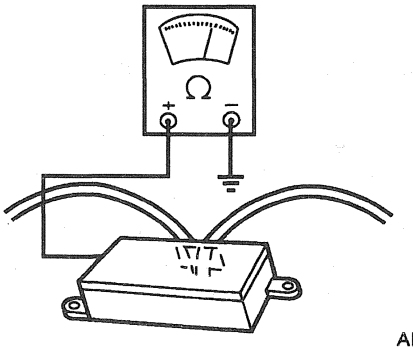 AK1150-A	1 Connect an ohmmeter between the radio antenna isolator case and the ground. • Is the resistance less than 5 ohms? → **Yes** GO to **E10**. → **No** REPLACE the radio antenna isolator. TEST the system for normal operation.

Official Licensed Product Ford Motor Company

(Continued)

DIAGNOSIS AND TESTING (Continued)

PINPOINT TEST E: NOISY RECEPTION — DEGRADED AM RECEPTION OR CONTINUOUS SEEK IN AM (Continued)

TEST CONDITIONS	TEST DETAILS/RESULTS/ACTIONS
E10 CHECK THE RADIO ANTENNA ISOLATOR SUPPLY TO THE DEFROSTER GRID	
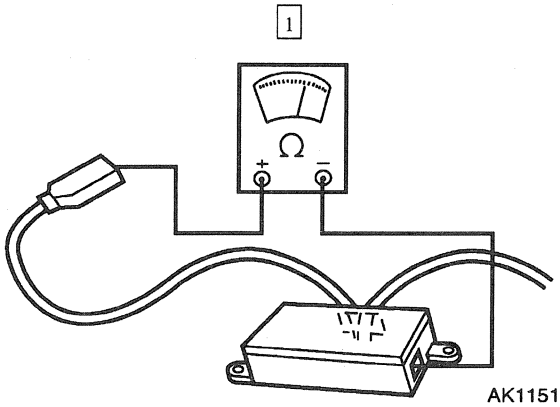 AK1151-A	1 Connect an ohmmeter between the left grid supply wire connector and the antenna isolation module defroster supply pin. • Is the resistance less than 5 ohms? → **Yes** GO to **E11**. → **No** REPLACE the radio antenna isolator. TEST the system for normal operation.
E11 CHECK THE RADIO ANTENNA ISOLATOR FOR AN INTERNAL SHORT	
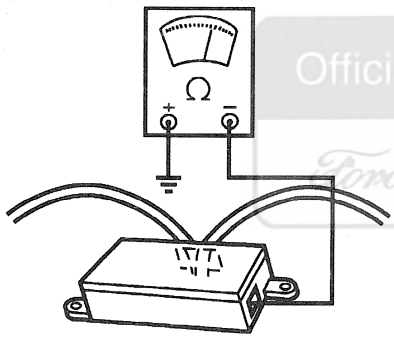 AK1152-A	1 Connect an ohmmeter between the radio antenna isolator defroster supply pin and the ground. • Is the resistance greater than 20 K ohms? → **Yes** REMOVE the radio chassis and SEND it to an authorized Ford audio system repair facility. TEST the system after repair. → **No** REPLACE the radio antenna isolator. TEST the system for normal operation.

Official Licensed Product
Ford Motor Company

DIAGNOSIS AND TESTING (Continued)

PINPOINT TEST F: NOISY RECEPTION — DEGRADED FM RECEPTION OR CONTINUOUS SEEK IN FM

TEST CONDITIONS	TEST DETAILS/RESULTS/ACTIONS
F1 CHECK THE CENTER CONDUCTOR CONNECTION ON THE REAR WINDOW FM ANTENNA PATTERN	
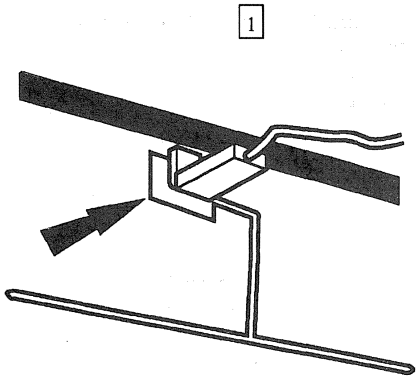 AK1153-B	1 Visually inspect the radio antenna lead in cable connection at the top of the rear glass. • Is the connection tight and free of dirt and corrosion? → **Yes** GO to **F2**. → **No** REPAIR the wire terminal and the glass mounted connector tab. TEST the system for normal operation.
F2 CHECK THE GROUND CONNECTION ON THE REAR WINDOW FM ANTENNA PATTERN	
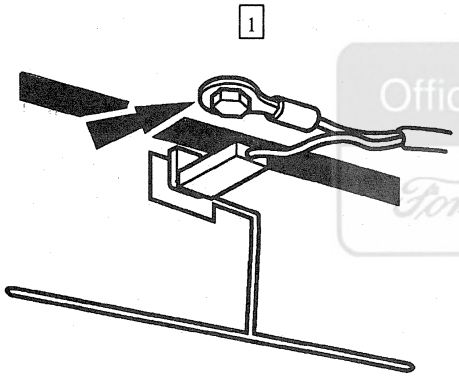 AK1154-B	1 Visually inspect the radio antenna lead in cable ground connection under the headliner near the FM antenna pattern connection. • Is the connection tight and free of dirt and corrosion? → **Yes** GO to **F3**. → **No** REPAIR the connection. TEST the system for normal operation.

Official Licensed Product Ford Motor Company

(Continued)

DIAGNOSIS AND TESTING (Continued)

PINPOINT TEST F: NOISY RECEPTION — DEGRADED FM RECEPTION OR CONTINUOUS SEEK IN FM (Continued)

TEST CONDITIONS	TEST DETAILS/RESULTS/ACTIONS
F3 CHECK THE RADIO ANTENNA ISOLATOR	
1 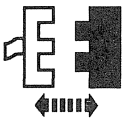 Rear Window Radio Antenna Lead In Cable 2 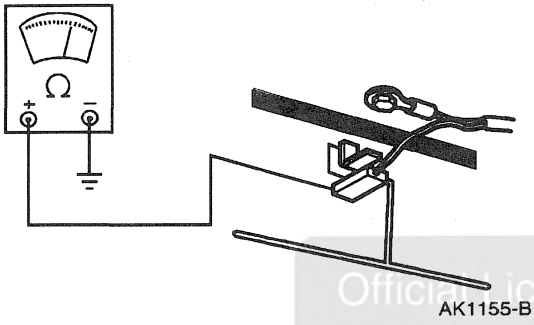 AK1155-B	2 Connect an ohmmeter between the center conductor of the radio antenna lead in cable and ground. • Is the resistance between 300-360 ohms? → **Yes** GO to **F5**. → **No** GO to **F4**.
F4 CHECK THE RADIO ANTENNA LEAD IN CABLE CENTER CONDUCTOR	
1 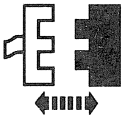 Radio Antenna Isolator Radio Antenna Lead In Cable 2 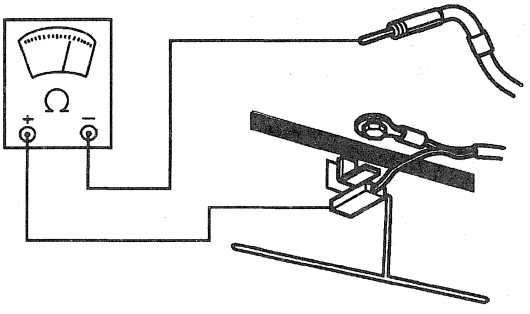 AK1156-B	2 Connect an ohmmeter between the center conductor of the radio antenna lead in cable at the FM antenna and the center conductor of the radio antenna lead in cable at the radio antenna isolator. • Is the resistance less than 5 ohms? → **Yes** REPLACE the radio antenna isolator. TEST the system for normal operation. → **No** REPLACE the radio antenna lead in cable. TEST the system for normal operation.

Official Licensed Product Ford Motor Company

(Continued)

DIAGNOSIS AND TESTING (Continued)

PINPOINT TEST F: NOISY RECEPTION — DEGRADED FM RECEPTION OR CONTINUOUS SEEK IN FM (Continued)

TEST CONDITIONS	TEST DETAILS/RESULTS/ACTIONS
F5 CHECK THE RADIO ANTENNA LEAD IN CABLE TO RADIO ANTENNA ISOLATOR GROUND CIRCUIT	
1 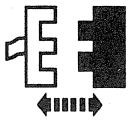 Rear Window Radio Antenna Lead In Cable Ground 2 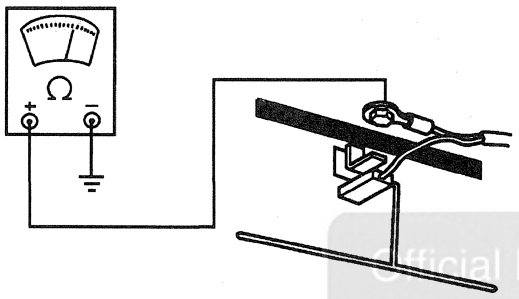 AK1157-B	2 Connect an ohmmeter between the ground lug of the radio antenna lead in cable and ground. • Is the resistance less than 5 ohms? → **Yes** GO to **F7**. → **No** GO to **F6**.
F6 CHECK THE RADIO ANTENNA LEAD IN CABLE OUTER CONDUCTOR	
1 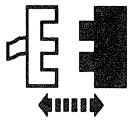 Radio Antenna Isolator Radio Antenna Lead In Cable 2 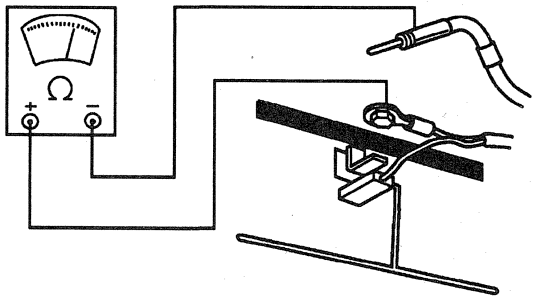 AK1158-B	2 Connect an ohmmeter between the ground lug of the radio antenna lead in cable at the FM antenna and the outer conductor of the radio antenna lead in cable at the radio antenna isolator. • Is the resistance less than 5 ohms? → **Yes** REPLACE the radio antenna isolator. TEST the system for normal operation. → **No** REPLACE the radio antenna lead in cable. TEST the system for normal operation.

Official Licensed Product

(Continued)

DIAGNOSIS AND TESTING (Continued)

PINPOINT TEST F: NOISY RECEPTION — DEGRADED FM RECEPTION OR CONTINUOUS SEEK IN FM (Continued)

TEST CONDITIONS	TEST DETAILS/RESULTS/ACTIONS
F7 CHECK FOR A SHORT TO THE URETHANE	
1 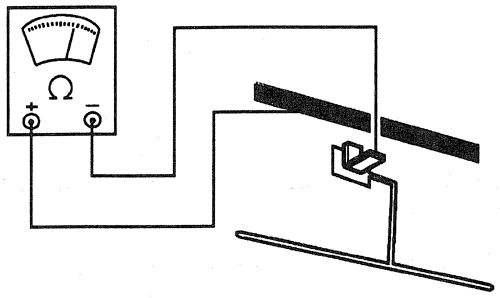 AK1159-B	1 Connect an ohmmeter between the FM antenna pattern connector and the urethane retaining the rear window glass. • Is the resistance greater than 100 K ohms? → **Yes** GO to **F8**. → **No** REPAIR the rear window mounting urethane for a short to the FM antenna pattern. TEST the system for normal operation.
F8 CHECK FOR DAMAGED FM ANTENNA PATTERN LINES	
1 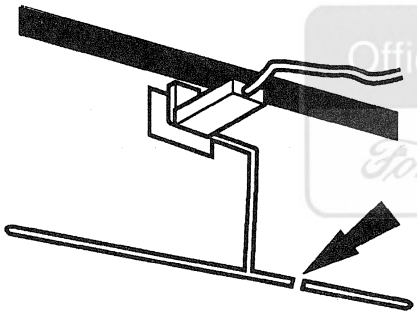 AK1160-B	1 Place a bright lamp inside the vehicle close to the FM antenna pattern. Inspect the FM antenna pattern from the outside of the vehicle for an open or damaged line. • Is the FM antenna pattern in place and continuous? → **Yes** GO to **F9**. → **No** REPAIR the open pattern line. TEST the system for normal operation.
F9 CHECK FOR HIGH RESISTANCE IN THE FM ANTENNA PATTERN	
1 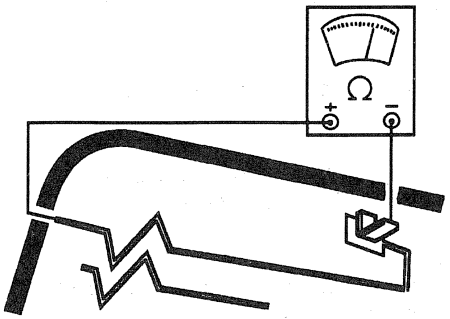 AK1161-B	1 Connect an ohmmeter between both ends of the FM antenna pattern and the FM antenna pattern connector. • Is the resistance less than 5 ohms? → **Yes** GO to **F10**. → **No** REPAIR the open pattern line. TEST the system for normal operation.

Official Licensed Product Ford Motor Company

(Continued)

DIAGNOSIS AND TESTING (Continued)

PINPOINT TEST F: NOISY RECEPTION — DEGRADED FM RECEPTION OR CONTINUOUS SEEK IN FM (Continued)

TEST CONDITIONS	TEST DETAILS/RESULTS/ACTIONS
F10 CHECK THE RADIO ANTENNA ISOLATOR CIRCUIT	
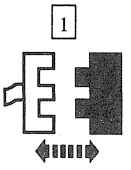 Radio Chassis Antenna Cable 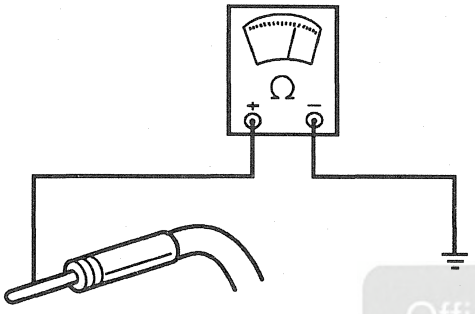 AK1143-A	2 Connect an ohmmeter between the antenna cable center conductor and ground. • Is the resistance between 300-360 ohms? → **Yes** GO to **F12.** → **No** GO to **F11.**
F11 CHECK THE ANTENNA CABLE CENTER CONDUCTOR	
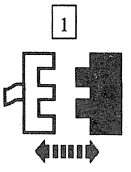 Radio Antenna Isolator Antenna Cable 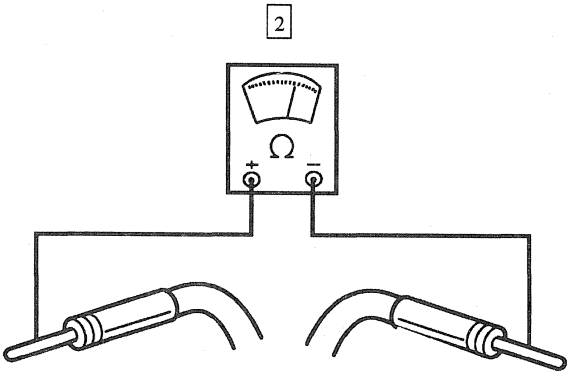 AK1144-A	2 Connect an ohmmeter between the center conductor of the antenna cable at the radio chassis and the center conductor of the antenna cable at the radio antenna isolator. • Is the resistance 5 ohms or less? → **Yes** REPLACE the radio antenna isolator. TEST the system for normal operation. → **No** REPLACE the antenna cable. TEST the system for normal operation.

Official Licensed Product
Ford Motor Company

(Continued)

DIAGNOSIS AND TESTING (Continued)

PINPOINT TEST F: NOISY RECEPTION — DEGRADED FM RECEPTION OR CONTINUOUS SEEK IN FM (Continued)

TEST CONDITIONS	TEST DETAILS/RESULTS/ACTIONS
F12 CHECK THE ANTENNA CABLE TO THE RADIO ANTENNA ISOLATOR GROUND CIRCUIT	
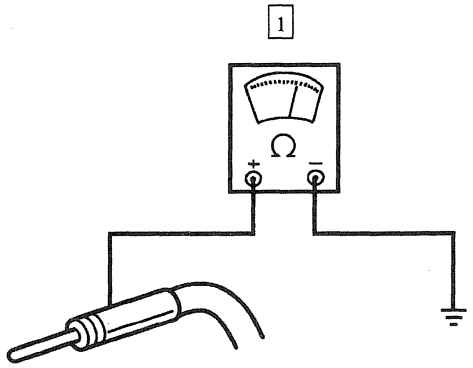 AK1145-A	1 Connect an ohmmeter between the antenna cable outer conductor and ground. • Is the resistance less than 5 ohms? → **Yes** REMOVE the radio chassis and SEND it to an authorized Ford audio system repair facility. TEST the system after repair. → **No** GO to **F13**.
F13 CHECK THE ANTENNA CABLE OUTER CONDUCTOR	
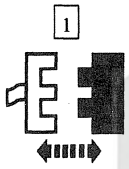 Radio Antenna Isolator Antenna Cable 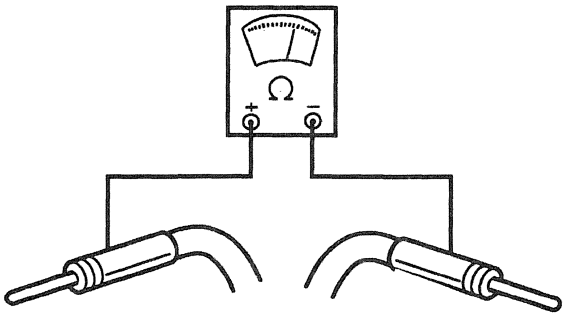 AK1146-A	2 Connect an ohmmeter between the outer conductor of the antenna cable at the radio chassis and the outer conductor of the antenna cable at the radio antenna isolator. • Is the resistance less than 5 ohms? → **Yes** REPLACE the radio antenna isolator. TEST the system for normal operation. → **No** REPLACE the antenna cable. TEST the system for normal operation.

Official Licensed Product
Ford Motor Company

DIAGNOSIS AND TESTING (Continued)

PINPOINT TEST G: POOR QUALITY/DISTORTED SOUND FROM ONE OR MORE SPEAKERS (NOT ALL SPEAKERS)

TEST CONDITIONS	TEST DETAILS/RESULTS/ACTIONS
G1 CHECK FOR RATTLES	
1 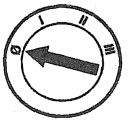	2 Check for loose trim panels, grilles or attachments that might cause rattles in the area of the radio speaker with poor quality/distorted sound. 3 Check for foreign material in the radio speaker cone. • Are there any visible radio speaker concerns? → **Yes** REPAIR the concerns. TEST the system for normal operation. → **No** GO to **G2**.
G2 SUBSTITUTE A KNOWN GOOD RADIO SPEAKER	
2 3 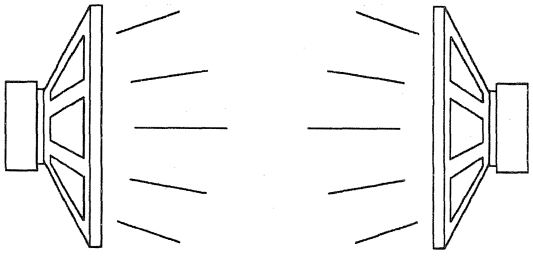 AK1015-A	1 Obtain a known good radio speaker to install temporarily in place of the existing radio speaker with poor quality/distorted sound. 3 Verify that a poor quality/distorted sound condition no longer exists. • Does the system operate properly with the known good radio speaker? → **Yes** REPLACE the existing radio speaker. TEST the system for normal operation. → **No** GO to **G3**.

Official Licensed Product Ford Motor Company

(Continued)

DIAGNOSIS AND TESTING (Continued)

PINPOINT TEST G: POOR QUALITY/DISTORTED SOUND FROM ONE OR MORE SPEAKERS (NOT ALL SPEAKERS) (Continued)

TEST CONDITIONS	TEST DETAILS/RESULTS/ACTIONS
G3 IDENTIFY SPEAKERS WITH POOR QUALITY/DISTORTED SOUND	
1 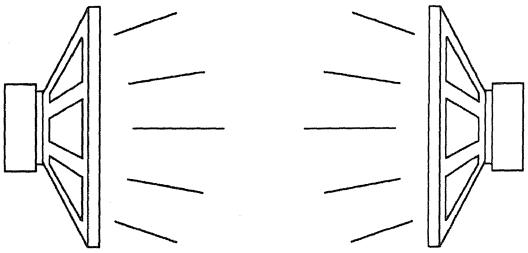 AK1015-A	1 Identify which speakers have poor quality/distorted sound condition. • Is the speaker with poor quality/distorted sound a woofer (JBL®)? → **Yes** GO to **G4**. → **No** GO to **G6**.
G4 CHECK THE WOOFER CIRCUITS FOR A SHORT	
1 2 3 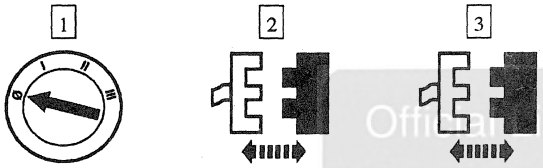 Radio Amplifier C451 Radio Speaker with Poor Quality/Distorted Sound 4 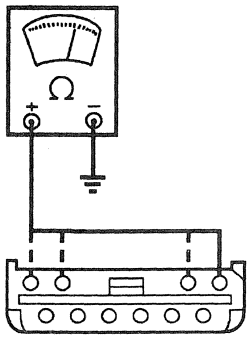 AK1163-A	4 Connect an ohmmeter between ground and the following radio amplifier connector pins for the speaker with poor quality/distorted sound: • Left front or left rear, C451-7, circuit 806 (PK/LB), and C451-8, circuit 819 (LG/W). • Right front or right rear, C451-9, circuit 803 (BR/PK), and C451-10, circuit 822 (BK/LG). • Is the resistance 10 K ohms or greater? → **Yes** GO to **G5**. → **No** REPAIR the circuit with a low resistance for a short to ground. TEST the system for normal operation.

Official Licensed Product Ford Motor Company

(Continued)

DIAGNOSIS AND TESTING (Continued)

PINPOINT TEST G: POOR QUALITY/DISTORTED SOUND FROM ONE OR MORE SPEAKERS (NOT ALL SPEAKERS) (Continued)

TEST CONDITIONS	TEST DETAILS/RESULTS/ACTIONS
G5 CHECK FOR POOR QUALITY/DISTORTED SOUND FROM OTHER RADIO SPEAKERS	
1 Radio Amplifier C451 2 Radio Speaker 3 4 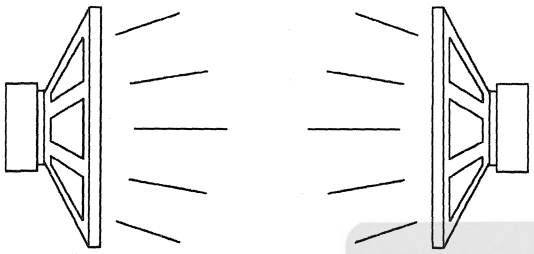 AK1015-A	4 Identify which speakers have poor quality/distorted sound. • Are there other speakers, besides the woofers (JBL®), with poor quality/distorted sound? → **Yes** GO to **G7**. → **No** REMOVE the radio chassis and SEND it to an authorized Ford audio system repair facility. TEST the system after repair.

Official Licensed Product
Ford Motor Company

(Continued)

DIAGNOSIS AND TESTING (Continued)

PINPOINT TEST G: POOR QUALITY/DISTORTED SOUND FROM ONE OR MORE SPEAKERS (NOT ALL SPEAKERS) (Continued)

TEST CONDITIONS	TEST DETAILS/RESULTS/ACTIONS
G6 CHECK THE SPEAKER CIRCUITS FOR A SHORT	
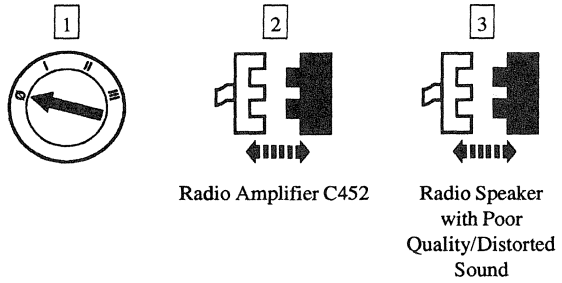 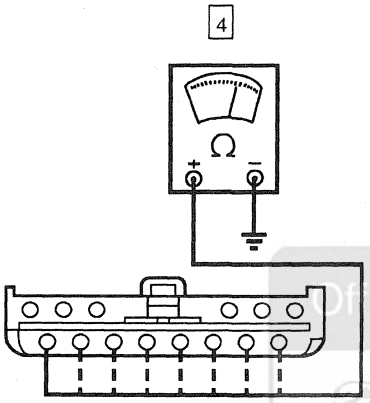	4 Connect an ohmmeter between ground and the following radio amplifier pins for the speaker with poor quality/distorted sound: • Left front, C452-8, circuit 804 (O/LG), and C452-7, circuit 813 (LB/W). • Right front, C452-4, circuit 805 (W/LG), and C452-3, circuit 811 (DG/O). • Left rear, C452-6, circuit 800 (GY/LB), and C452-5, circuit 801 (T/Y). • Right rear, C452-2, circuit 802 (O/R), and C452-1, circuit 824 (W/P). • Is the resistance 10 K ohms or greater? → **Yes** GO to G7. → **No** REPAIR the suspect circuit. TEST the system for normal operation.

Official Licensed Ford Motor Company

(Continued)

DIAGNOSIS AND TESTING (Continued)

PINPOINT TEST G: POOR QUALITY/DISTORTED SOUND FROM ONE OR MORE SPEAKERS (NOT ALL SPEAKERS) (Continued)

TEST CONDITIONS	TEST DETAILS/RESULTS/ACTIONS
G7 CHECK THE RADIO CHASSIS TO RADIO AMPLIFIER CIRCUITS FOR A SHORT	
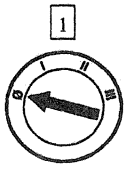 1 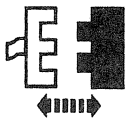 2 Radio Chassis C258 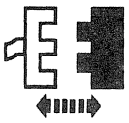 3 Radio Amplifier C453 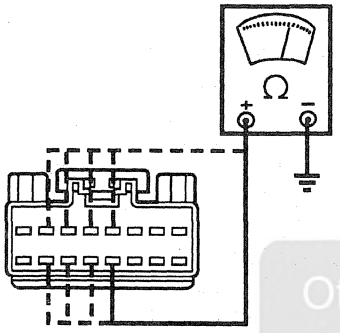 4 AK1165-A	4 Connect an ohmmeter between ground and the following radio chassis connector pins for the speaker with poor quality/distorted sound: • Left front, C258-13, circuit 280 (LG), and C258-12, circuit 857 (W/O). • Right front, C258-5, circuit 279 (W/R), and C258-4, circuit 858 (BR). • Left rear, C258-11, circuit 277 (LB/BK), and C258-10, circuit 859 (Y). • Right rear, C258-3, circuit 278 (P/W), and C258-2, circuit 855 (LB). • Is the resistance 10 K ohms or greater? → **Yes** GO to G8. → **No** REPAIR the suspect circuit. TEST the system for normal operation.
G8 CHECK THE RADIO AMPLIFIER FOR AN INTERNAL CONCERN	
2 3 4 5 Radio Chassis C258 Radio Amplifier C453 Radio Amplifier C451 Radio Amplifier C452 6 7 Radio Speakers	1 Obtain a known good radio amplifier to install temporarily in place of the radio amplifier.

(Continued)

Official Licensed Product
Ford Motor Company

DIAGNOSIS AND TESTING (Continued)

PINPOINT TEST G: POOR QUALITY/DISTORTED SOUND FROM ONE OR MORE SPEAKERS (NOT ALL SPEAKERS) (Continued)

TEST CONDITIONS	TEST DETAILS/RESULTS/ACTIONS
G8 CHECK THE RADIO AMPLIFIER FOR AN INTERNAL CONCERN (Continued)	
	8 Verify that a poor quality/distorted sound condition no longer exists. • Does the system operate properly with the known good radio amplifier? → **Yes** REMOVE the radio amplifier and SEND it to an authorized Ford audio system repair facility. TEST the system after repair. → **No** REMOVE the radio chassis and SEND it to an authorized Ford audio system repair facility. TEST the system after repair.

PINPOINT TEST H: POOR QUALITY/DISTORTED SOUND FROM ALL OF THE SPEAKERS

TEST CONDITIONS	TEST DETAILS/RESULTS/ACTIONS
H1 CHECK FOR CD CHANGER DISTORTION (IF EQUIPPED)	
1 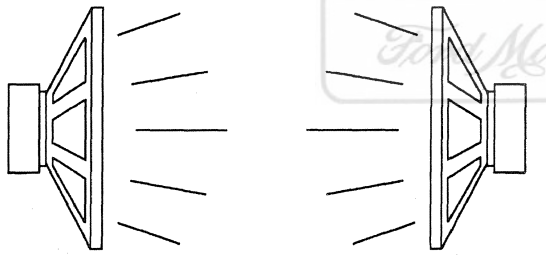 AK1015-A	1 Verify that poor quality/distorted sound condition occurs only during CD changer operation. • Does the poor quality/distorted sound condition occur only during the CD changer operation? → **Yes** GO to **H2**. → **No** GO to **H3**.
H2 SUBSTITUTE A KNOWN GOOD CD CHANGER	
1 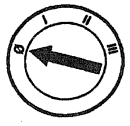	2 Obtain a known good CD changer to install temporarily in place of the CD changer.

(Continued)

Official Licensed Product Ford Motor Company

DIAGNOSIS AND TESTING (Continued)

PINPOINT TEST H: POOR QUALITY/DISTORTED SOUND FROM ALL OF THE SPEAKERS (Continued)

TEST CONDITIONS	TEST DETAILS/RESULTS/ACTIONS
H2 SUBSTITUTE A KNOWN GOOD CD CHANGER (Continued)	
3 4 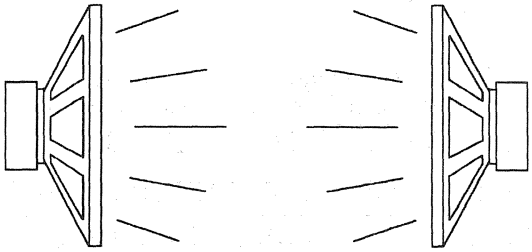 AK1015-A	4 Verify that a poor quality/distorted sound condition no longer exists during CD changer operation. • Does the system operate properly with the known good CD changer? → **Yes** REMOVE the CD changer and SEND it to an authorized Ford audio system repair facility. TEST the system after repair. → **No** REMOVE the radio chassis and SEND it to an authorized Ford audio system repair facility. TEST the system after repair.
H3 SUBSTITUTE A KNOWN GOOD RADIO CHASSIS	
1 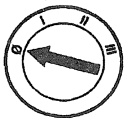 3 	2 Obtain a known good radio chassis to install temporarily in place of the existing radio chassis.

(Continued)

Official Licensed Reproduction
Ford Motor Company

DIAGNOSIS AND TESTING (Continued)

PINPOINT TEST H: POOR QUALITY/DISTORTED SOUND FROM ALL OF THE SPEAKERS (Continued)

TEST CONDITIONS	TEST DETAILS/RESULTS/ACTIONS
H3 SUBSTITUTE A KNOWN GOOD RADIO CHASSIS (Continued)	
4 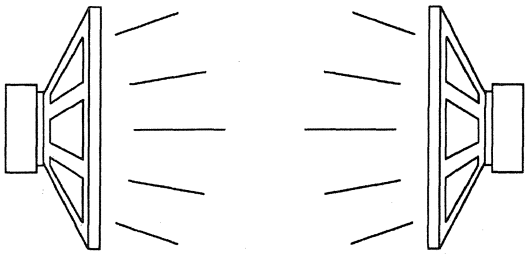 AK1015-A	4 Verify that a poor quality/distorted sound condition no longer exists. • Does the system operate properly with the known good radio chassis? → **Yes** REMOVE the radio chassis and SEND it to an authorized Ford audio system repair facility. TEST the system after repair. → **No** REMOVE the radio amplifier and SEND it to an authorized Ford audio system repair facility. TEST the system after repair.

PINPOINT TEST J: NO SOUND FROM ONE OR MORE OF THE SPEAKERS—NOT ALL SPEAKERS

TEST CONDITIONS	TEST DETAILS/RESULTS/ACTIONS
J1 CHECK FOR SOUND COMING FROM THE RADIO SPEAKERS	
1 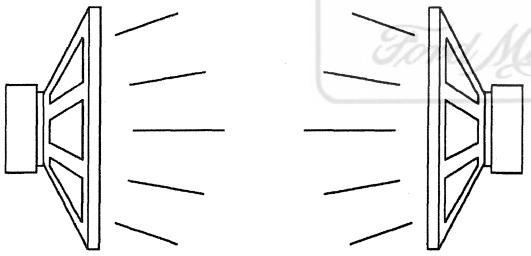 AK1015-A	1 Identify which speakers have no sound. • Is the speaker with no sound a woofer (JBL®)? → **Yes** GO to **J2**. → **No** GO to **J7**.

Official Licensed Product Ford Motor Company

(Continued)

DIAGNOSIS AND TESTING (Continued)

PINPOINT TEST J: NO SOUND FROM ONE OR MORE OF THE SPEAKERS—NOT ALL SPEAKERS (Continued)

TEST CONDITIONS	TEST DETAILS/RESULTS/ACTIONS
J2 CHECK THE CIRCUIT TO THE WOOFER FOR AN OPEN	
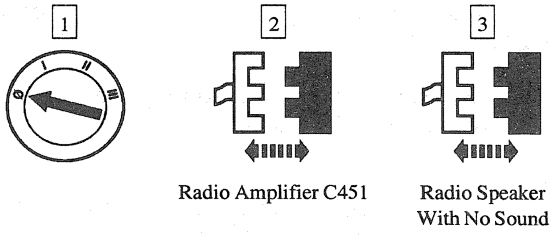 Radio Amplifier C451 — Radio Speaker With No Sound 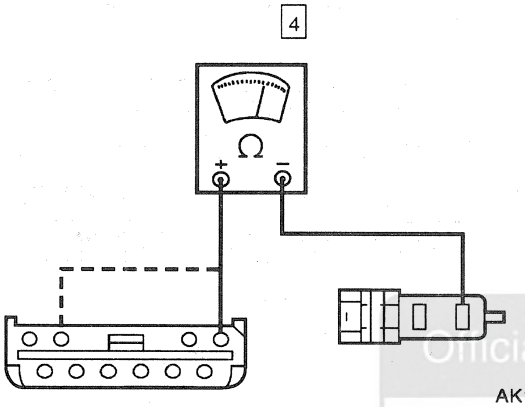 AK1166-A	4 Connect an ohmmeter between the following radio amplifier connector pins and the speaker connector with no sound: • Left front or left rear, C451-7, circuit 806 (PK/LB) • Right front or right rear, C451-9, circuit 803 (BR/PK) • Is the resistance 5 ohms or less? → **Yes** GO to **J3**. → **No** REPAIR the circuit in question. TEST the system for normal operation.
J3 CHECK THE CIRCUIT FROM THE WOOFER FOR AN OPEN	
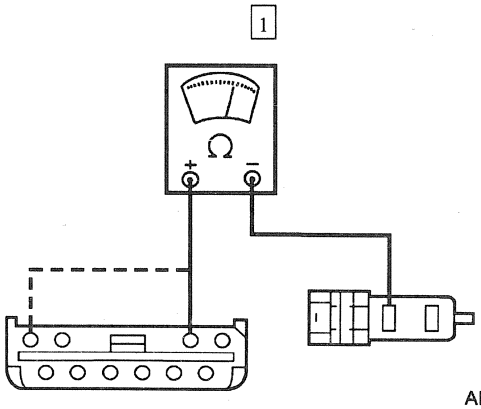 AK1167-A	1 Connect an ohmmeter between the following radio amplifier connector pins and the speaker connector with no sound: • Left front or left rear, C451-8, circuit 819 (LG/W) • Right front or right rear, C451-10, circuit 822 (BK/LG) • Is the resistance 5 ohms or less? → **Yes** GO to **J4**. → **No** REPAIR the circuit in question. TEST the system for normal operation.

(Continued)

Official Licensed Product Ford Motor Company

DIAGNOSIS AND TESTING (Continued)

PINPOINT TEST J: NO SOUND FROM ONE OR MORE OF THE SPEAKERS—NOT ALL SPEAKERS (Continued)

TEST CONDITIONS	TEST DETAILS/RESULTS/ACTIONS
J4 CHECK THE WOOFER CIRCUITS FOR A SHORT	
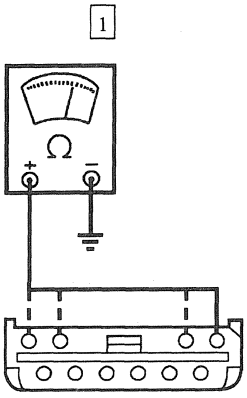 AK1163-A	1 Connect an ohmmeter between ground and the following radio amplifier connector pins for the speaker with no sound: • Left front or left rear, C451-7, circuit 806 (PK/LB), and C451-8, circuit 819 (LG/W). • Right front or right rear, C451-9, circuit 803 (BR/PK), and C451-10, circuit 822 (BK/LG). • Is the resistance 10 K ohms or greater? → **Yes** GO to **J5**. → **No** REPAIR the circuit in question. TEST the system for normal operation.
J5 SUBSTITUTE A KNOWN GOOD RADIO SPEAKER (JBL®)	
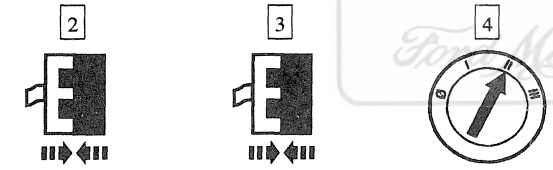	1 Obtain a known good radio speaker to install temporarily in place of the existing radio speaker with no sound.
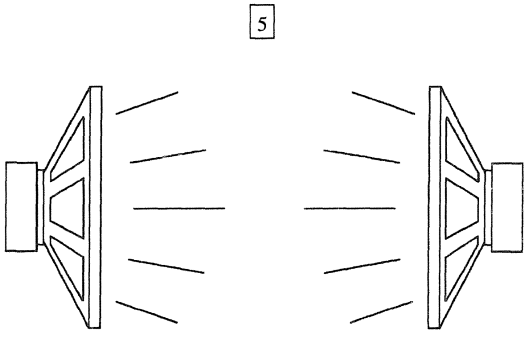 AK1015-A	5 Verify that sound is coming from the known good radio speaker. • Does the system operate properly with the known good radio speaker? → **Yes** REPLACE the existing radio speaker. TEST the system for normal operation. → **No** GO to **J6**.

(Continued)

Official Licensed Reprint Ford Motor Company

DIAGNOSIS AND TESTING (Continued)

PINPOINT TEST J: NO SOUND FROM ONE OR MORE OF THE SPEAKERS—NOT ALL SPEAKERS (Continued)

TEST CONDITIONS	TEST DETAILS/RESULTS/ACTIONS
J6 CHECK FOR SOUND FROM OTHER RADIO SPEAKERS	
1 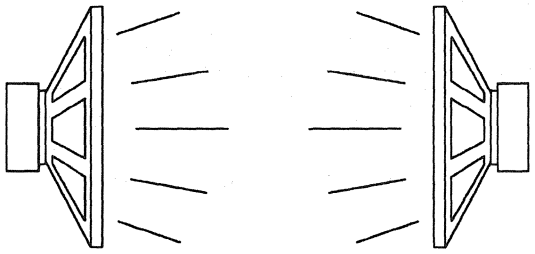 AK1015-A	1 Identify which speakers have no sound. • Are there other speakers with no sound? → **Yes** GO to **J7**. → **No** REMOVE the radio amplifier and SEND it to an authorized Ford audio system repair facility. TEST the system after repair.
J7 CHECK FOR NO SOUND CONDITION DURING CD CHANGER OPERATION (if equipped)	
1 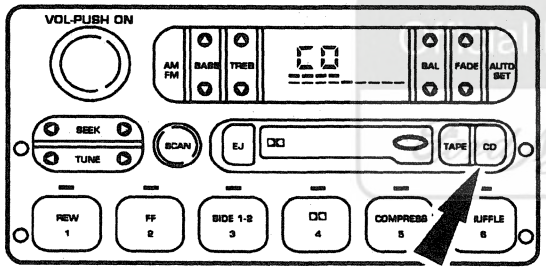 AK1169-A	1 Verify that the no sound condition occurs only during CD changer operation. • Does the no sound condition occur only during the CD changer operation? → **Yes** GO to **J8**. → **No** GO to **J10**.

(Continued)

DIAGNOSIS AND TESTING (Continued)

PINPOINT TEST J: NO SOUND FROM ONE OR MORE OF THE SPEAKERS—NOT ALL SPEAKERS (Continued)

TEST CONDITIONS	TEST DETAILS/RESULTS/ACTIONS
J8 CHECK THE CIRCUITS BETWEEN THE UNITS	
 CD Changer C445 Radio Chassis C258	3 Measure the resistance between CD changer, C445, and radio chassis C258; and between CD changer C445, and ground as follows:

Circuit	CD changer C445 Pin	Radio chassis C258 Pin
833 (T)	1	1
1068 (LG/BK)	2	6
798 ((LG/R)	4	15
799 (O/BK)	6	7
690 (GY)	7	8
832 (LB/PK)	9	9
856 (P)	13	16

- Is the resistance between CD change, C445, and radio chassis C258 less than 5 ohms, and between CD changer C445, and ground greater than 10,000 ohms?

→ **Yes**
GO to **J9**.

→ **No**
Repair the circuit(s) in question. TEST the system for normal operation.

J9 SUBSTITUTE A KNOWN GOOD CD CHANGER	
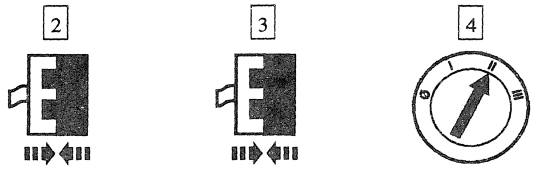 Radio Chassis C258 Compact Disc Changer C445	1 Obtain a known good CD changer to install temporarily in place of the existing CD changer.

(Continued)

Official Licensed Product Ford Motor Company®

DIAGNOSIS AND TESTING (Continued)

PINPOINT TEST J: NO SOUND FROM ONE OR MORE OF THE SPEAKERS—NOT ALL SPEAKERS (Continued)

TEST CONDITIONS	TEST DETAILS/RESULTS/ACTIONS
J9 SUBSTITUTE A KNOWN GOOD CD CHANGER (Continued)	
5 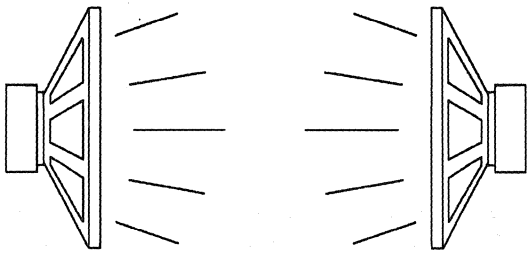 AK1015-A	5 Verify that sound is coming from the radio speakers • Does the system operate properly with the known good CD changer? → **Yes** REMOVE the CD changer and SEND it to an authorized Ford audio system repair facility. TEST the system after repair. → **No** REMOVE the radio chassis changer and SEND it to an authorized Ford audio system repair facility. TEST the system after repair.
J10 CHECK THE CIRCUIT TO THE SPEAKER FOR AN OPEN	
1 2 3 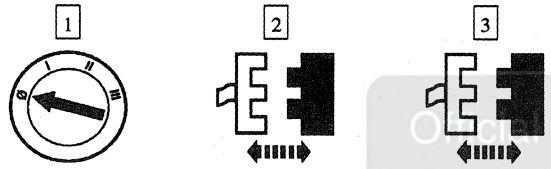 Radio Amplifier C452 Radio Speaker With No Sound 4 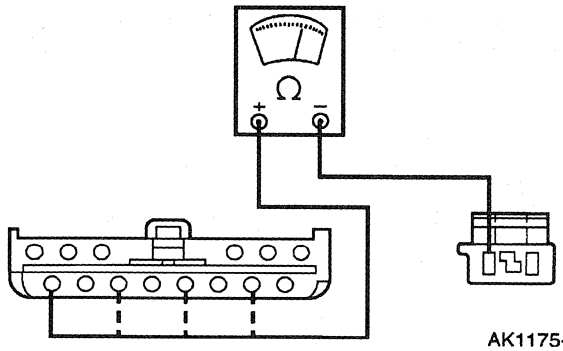 AK1175-A	4 Connect an ohmmeter between the following radio amplifier connector pins and the speaker connector with no sound: • Left front, C452-8, circuit 804 (O/LG). • Right front, C452-4, circuit 805 (W/LG). • Left rear, C452-6, circuit 800 (GY/LB). • Right rear, C452-2, circuit 802 (O/R). • Is the resistance less than 5 ohms? → **Yes** GO to **J11**. → **No** REPAIR the circuit in question. TEST the system for normal operation.

(Continued)

Ford Licensed Product Ford Motor Company

DIAGNOSIS AND TESTING (Continued)

PINPOINT TEST J: NO SOUND FROM ONE OR MORE OF THE SPEAKERS—NOT ALL SPEAKERS (Continued)

TEST CONDITIONS	TEST DETAILS/RESULTS/ACTIONS
J11 CHECK THE CIRCUIT FROM THE SPEAKER FOR AN OPEN	
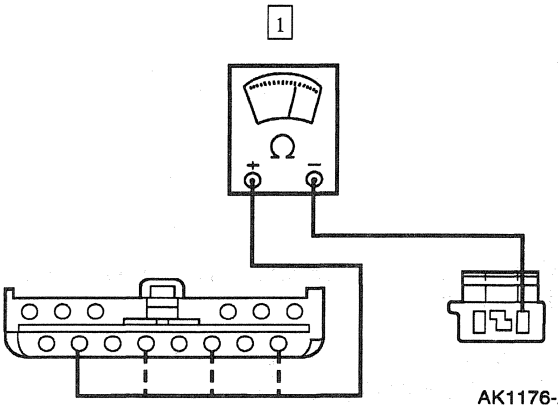 AK1176-A	1 Connect an ohmmeter between the following radio amplifier connector pins and the speaker connector with no sound: • Left front, C452-7, circuit 813 (LB/W). • Right front, C452-3, circuit 811 (DG/O). • Left rear, C452-5, circuit 801 (T/Y). • Right rear, C452-1, circuit 824 (W/P). • Is the resistance 5 ohms or less? → **Yes** GO to **J12**. → **No** REPAIR the circuit in question. TEST the system for normal operation.
J12 CHECK THE SPEAKER CIRCUITS FOR A SHORT	
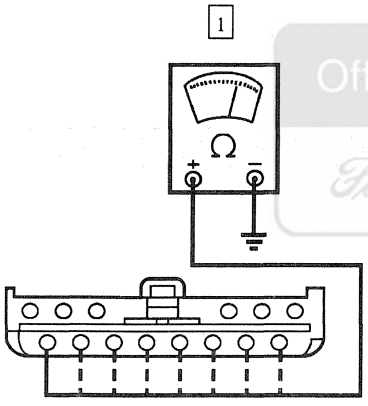 AK1164-A	1 Connect an ohmmeter between the ground and the following radio amplifier connector pins for the speaker with no sound: • Left front, C452-8, circuit 804 (O/LG), and C452-7, circuit 813 (LB/W). • Right front, C452-4, circuit 805 (W/LG), and C452-3, circuit 811, (DG/O). • Left rear, C452-6, circuit 800 (GY/LB), and C452-5, circuit 801 (T/Y). • Right rear, C452-2, circuit 802 (O/R), and C452-1, circuit 824 (W/P). • Is the resistance 10 K ohms or greater? → **Yes** GO to **J13**. → **No** REPAIR the circuit in question. TEST the system for normal operation.
J13 SUBSTITUTE A KNOWN GOOD RADIO SPEAKER	
	1 Obtain a known good radio speaker to install temporarily in place of the existing radio speaker with no sound.

(Continued)

Official Licensee Copy
Ford Motor Company

DIAGNOSIS AND TESTING (Continued)

PINPOINT TEST J: NO SOUND FROM ONE OR MORE OF THE SPEAKERS—NOT ALL SPEAKERS (Continued)

TEST CONDITIONS	TEST DETAILS/RESULTS/ACTIONS
J13 SUBSTITUTE A KNOWN GOOD RADIO SPEAKER (Continued)	
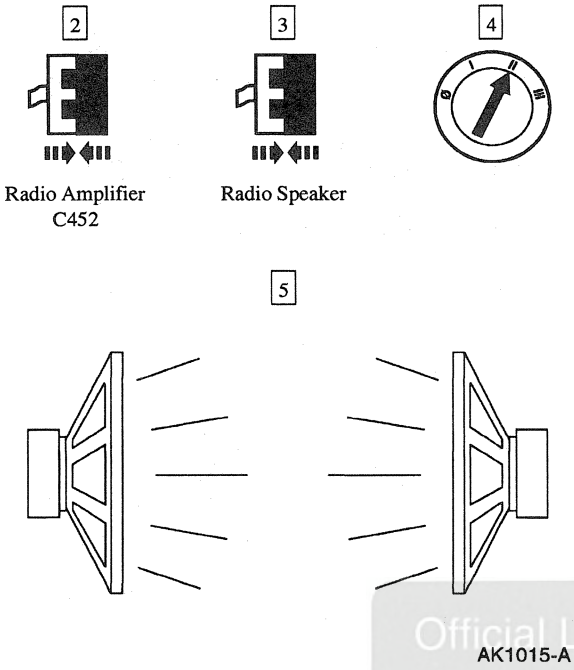	5 Verify that sound is coming from the known good radio speaker . • Does the system operate properly with the known good radio speaker ? → **Yes** REPLACE the existing radio speaker . TEST the system for normal operation. → **No** GO to **J14.**
J14 CHECK THE CIRCUITS BETWEEN THE RADIO AMPLIFIER AND THE RADIO CHASSIS	
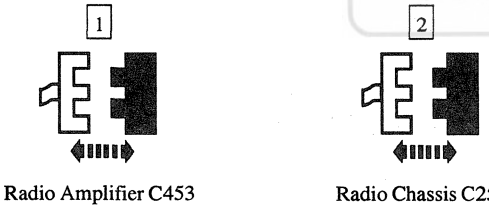	3 Measure the resistance between radio amplifier C453, and radio chassis C258; and between radio chassis C258, and ground as follows:

Circuit	Radio amplifier C453 Pin	Radio chassis C258 Pin
855 (LB)	1	2
858 (BR)	2	4
859 (Y)	3	10
857 (W/O)	4	12
278 (P/W)	5	3
279 (W/R)	6	5
277 (LB/BK)	7	11
280 (LG)	8	13

Official Licensed Product Ford Motor Company

(Continued)

DIAGNOSIS AND TESTING (Continued)

PINPOINT TEST J: NO SOUND FROM ONE OR MORE OF THE SPEAKERS—NOT ALL SPEAKERS (Continued)

TEST CONDITIONS	TEST DETAILS/RESULTS/ACTIONS
J14 CHECK THE CIRCUITS BETWEEN THE RADIO AMPLIFIER AND THE RADIO CHASSIS (Continued)	
	• Is the resistance between radio amplifier C453, and radio chassis C258 less than 5 ohms, and between radio chassis C258, and ground greater than 10,000 ohms? → **Yes** GO to **J15**. → **No** Repair the circuit(s) in question. TEST the system for normal operation.
J15 SUBSTITUTE A KNOWN GOOD RADIO CHASSIS	
2 3 4 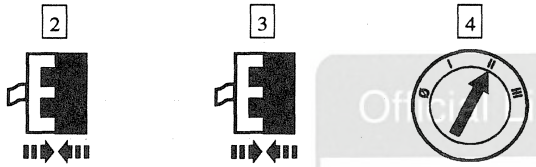 Radio Chassis Amplifier C258 Radio Amplifier C453 5 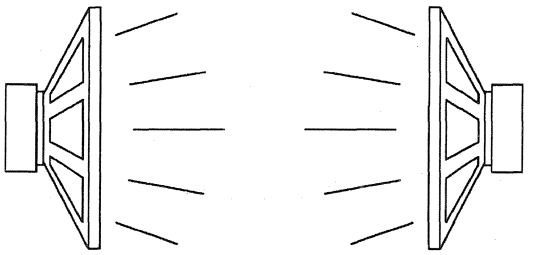 AK1015-A	1 Obtain a known good radio chassis to install temporarily in place of the existing radio chassis . 5 Verify that sound is coming from the radio speakers • Does the system operate properly with the known good radio chassis ? → **Yes** REMOVE the radio chassis and SEND it to an authorized Ford audio system repair facility. TEST the system after repair. → **No** REMOVE the radio amplifier and SEND it to an authorized Ford audio system repair facility. TEST the system after repair.

Official Licensed Product Ford Motor Company

DIAGNOSIS AND TESTING (Continued)

PINPOINT TEST K: NO SOUND FROM ALL OF THE SPEAKERS

TEST CONDITIONS	TEST DETAILS/RESULTS/ACTIONS
K1 CHECK THE OPERATION OF THE RADIO CHASSIS	
1 2 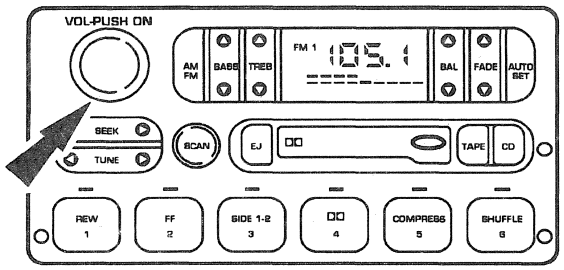 AK1014-A	2 Press the VOL-PUSH ON button. • Is the display illuminated? → **Yes** GO to **K2**. → **No** GO to Pinpoint Test A.
K2 CHECK POWER DISTRIBUTION BOX FUSE 10 (20A)	
1 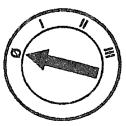 2 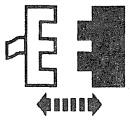 Power Distribution Box Fuse 10 (20A) 3 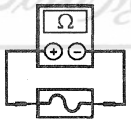 Power Distribution Box Fuse 10 (20A)	• Is the fuse OK? → **Yes** REINSTALL the fuse. GO to **K3**. → **No** REPLACE the fuse. TEST the system for normal operation. If the fuse fails again, CHECK for short to ground; REPAIR as necessary.

(Continued)

Official Ford Licensed Product
Ford Motor Company

DIAGNOSIS AND TESTING (Continued)

PINPOINT TEST K: NO SOUND FROM ALL OF THE SPEAKERS (Continued)

TEST CONDITIONS	TEST DETAILS/RESULTS/ACTIONS
K3 CHECK FOR POWER TO THE RADIO AMPLIFIER	
1 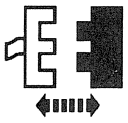 Radio Amplifier Connector C451 2 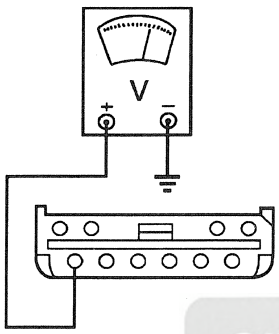 AK1179-B	2 Connect a voltmeter between radio amplifier Pin C451-6, circuit 797 (LG/P), and ground. • Is the voltage 10 volts or greater? → **Yes** GO to **K4**. → **No** REPAIR the circuit 797 (LG/P). TEST the system for normal operation.
K4 CHECK THE RADIO AMPLIFIER GROUND	
1 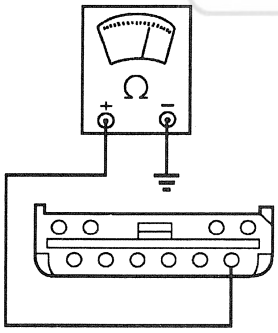 AK1180-B	1 Connect an ohmmeter between radio amplifier Pin C451-1, circuit 694 (BK/LG), and ground. • Is the resistance 5 ohms or less? → **Yes** GO to **K5**. → **No** REPAIR the circuit 694 (BK/LG). TEST the system for normal operation.
K5 SUBSTITUTE A KNOWN GOOD RADIO AMPLIFIER	
2 Radio Amplifier C451 3 	1 Obtain a known good radio amplifier to install temporarily in place of the existing radio amplifier.

(Continued)

Official Licensed Product
Ford Motor Company

DIAGNOSIS AND TESTING (Continued)

PINPOINT TEST K: NO SOUND FROM ALL OF THE SPEAKERS (Continued)

TEST CONDITIONS	TEST DETAILS/RESULTS/ACTIONS
K5 SUBSTITUTE A KNOWN GOOD RADIO AMPLIFIER (Continued)	
4 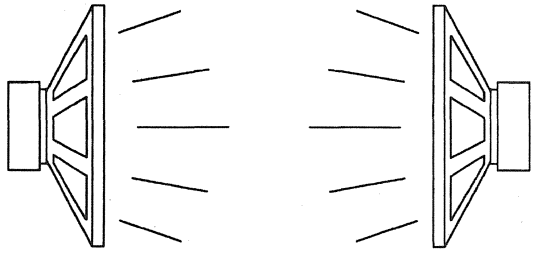 AK1015-A	4 Verify that sound is coming from the radio speakers. • Does the system operate properly with the known good radio amplifier? → **Yes** REMOVE the radio amplifier and send it to an authorized Ford audio system repair facility. TEST the system after repair. → **No** REMOVE the radio chassis and send it to an authorized Ford audio system repair facility. TEST the system after repair.

GENERAL PROCEDURES

Tape Player Cleaning

Official Licensed Product
Ford Motor Company

1. For best performance, it is recommended that the tape player be cleaned once for every 10 to 12 hours of playing time. The tape player should be cleaned using a Ford tape player cleaning cartridge, available at your Ford or Lincoln-Mercury Dealer. The use of other cleaning products is not recommended, as these products could cause damage to the player or cassette tapes.

SECTION 415-01 Receiver and Audio Media Player

VEHICLE APPLICATION: Mark VIII

SUBJECT **PAGE**

DESCRIPTION AND OPERATION
Audio System 415-01-2
DIAGNOSIS AND TESTING
Audio System 415-01-4
REMOVAL AND INSTALLATION
CD Changer 415-01-6
Radio Amplifier 415-01-8
Radio Chassis/Integrated Control Panel 415-01-5
SPECIFICATIONS 415-01-9

Official Licensed Product
Ford Motor Company

DESCRIPTION AND OPERATION

Audio System

The JBL sound system consists of:

- A premium analog cassette radio or a digital audio compact disc radio chassis.
- Four JBL door speakers.
- Four JBL quarter trim mounted speakers.
- A JBL radio amplifier.
- An optional, luggage compartment-mounted 10-Disc digital audio disc changer.

JBL Sound System

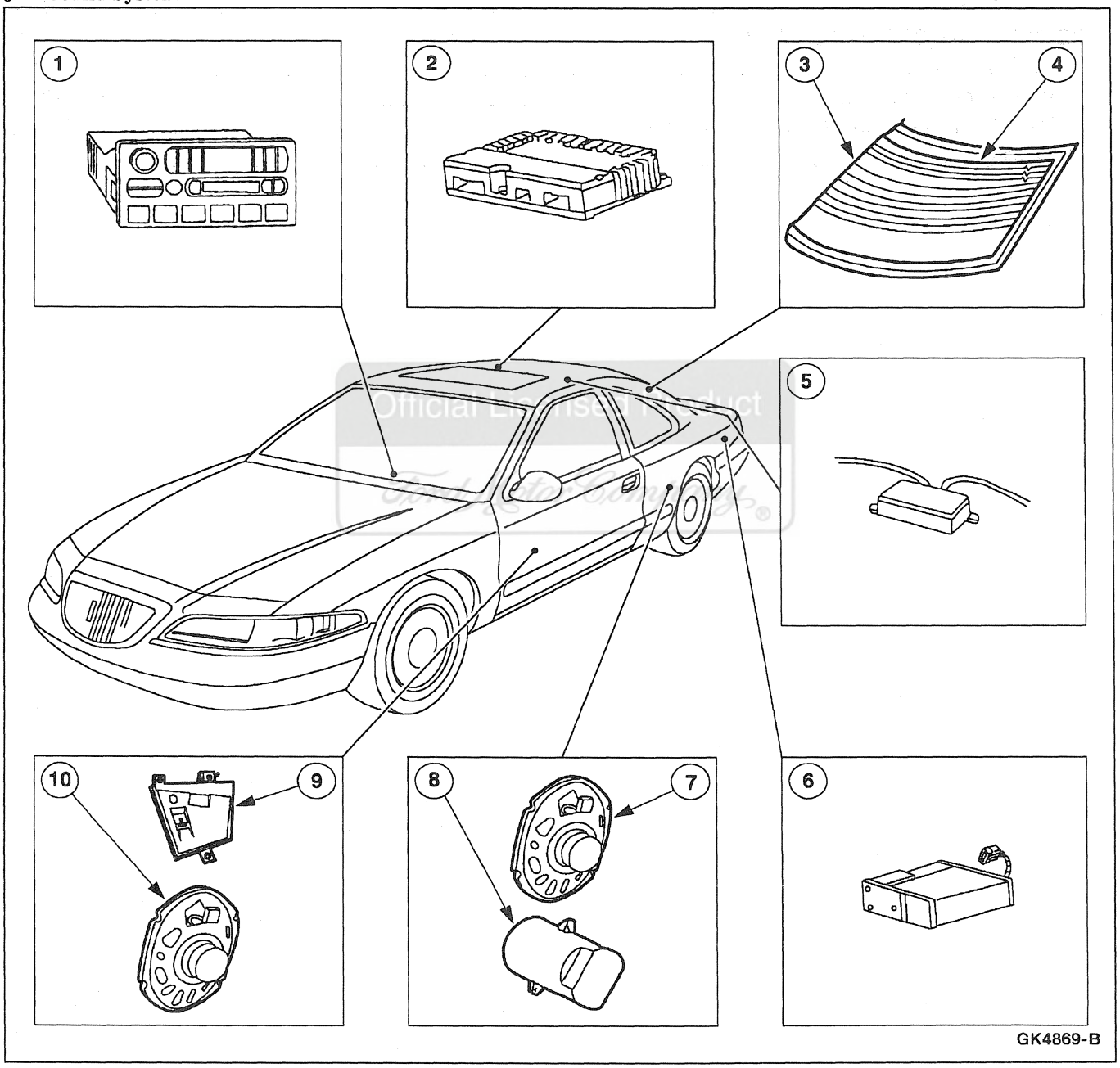

DESCRIPTION AND OPERATION (Continued)

Item	Part Number	Description
1	18806	Radio Chassis (P100)
2	—	Radio Amplifier
3	—	Rear Window Defroster Grid/AM Antenna (Part of 42006)
4	—	FM Antenna Tracing (Part of 42006)

(Continued)

Item	Part Number	Description
5	18K891	Radio Antenna Isolator
6	18D806	Digital Audio Compact Disc Player
7	18808	Radio Speaker, Rear Woofer
8	18808	Radio Speaker, Rear Tweeter
9	18808	Radio Speaker, Front Tweeter
10	18808	Radio Speaker, Front Woofer

Radio Chassis

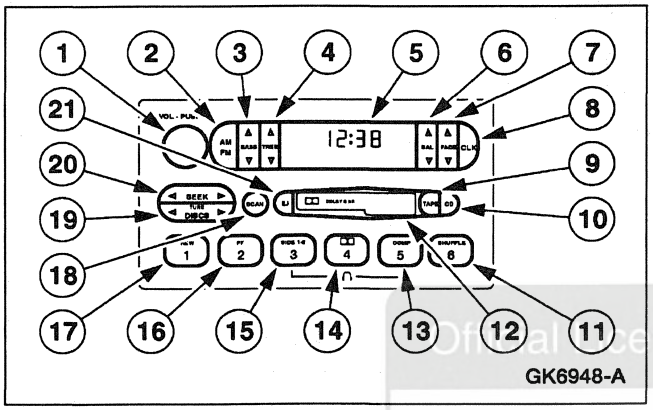

Item	Part Number	Description
1	—	ON/OFF and Volume Control Button
2	—	AM/FM Band Selector
3	—	Bass
4	—	Treble
5	—	Display
6	—	Balance Control
7	—	Fade Control

(Continued)

Item	Part Number	Description
8	—	Clock Button
9	—	Tape Mode Button
10	—	CD Mode Button
11	—	CD Shuffle and Radio Memory Button
12	—	Cassette Loading Port
13	—	Compression and Radio Memory Button
14	—	Dolby and Radio Memory Button
15	—	Cassette Side and Radio Memory Button
16	—	Cassette Fast Forward and Radio Memory Button
17	—	Cassette Rewind and Radio Memory Button
18	—	Tuner Scan Control
19	—	CD Select/Radio Fine Tuning Control
20	—	Tuner Seek Control
21	—	Cassette Eject Button

Official Licensed Product
Ford Motor Company

DESCRIPTION AND OPERATION (Continued)

Radio Frequency Interference Suppression Equipment

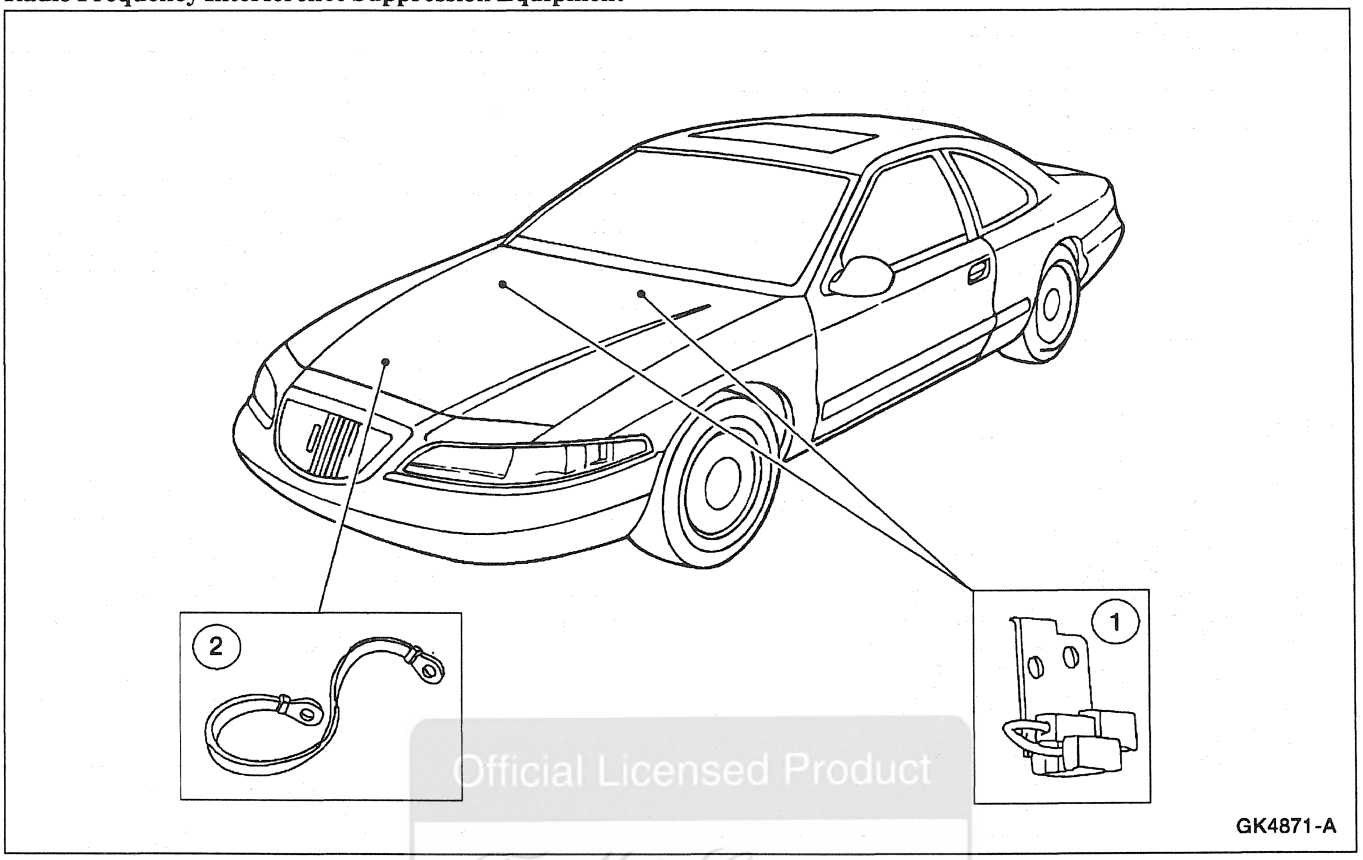

Official Licensed Product
Ford Motor Company

Item	Part Number	Description
1	18801	Radio Ignition Interference Capacitor
2	19A095	Radio Frequency Interference Suppression Bond

The radio suppression equipment reduces interference transmitted through the radio speakers by the engine ignition and electrical system.

DIAGNOSIS AND TESTING

Audio System

Refer to Section 415-00.

REMOVAL AND INSTALLATION

Radio Chassis/Integrated Control Panel

Special Tool(s)

ST1445-A	Radio Removing Tool T87P-19061-A

Removal

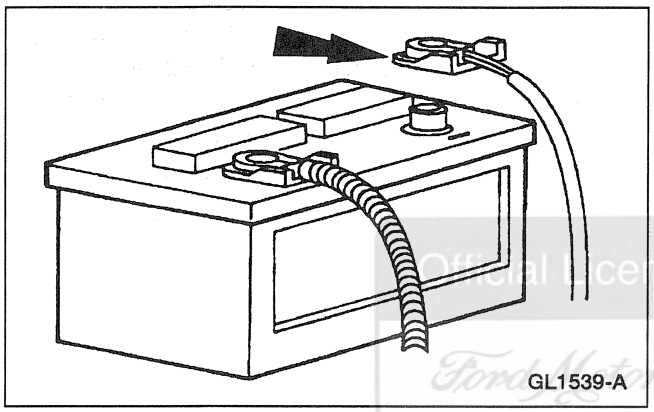
GL1539-A

1. Disconnect the battery ground cable.

Official Licensed Product Ford Motor Company

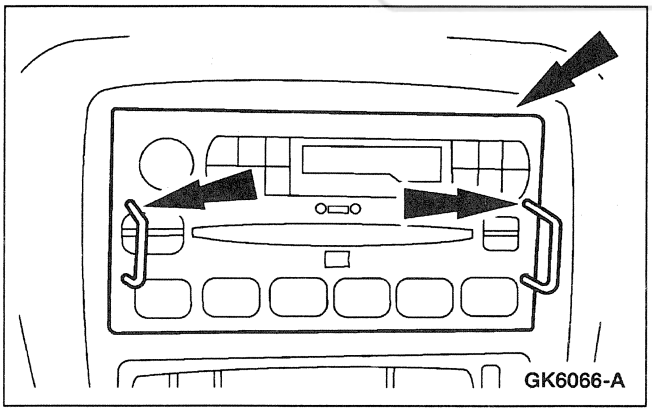
GK6066-A

2. Use Radio Removing Tool to pull out the radio chassis.

REMOVAL AND INSTALLATION (Continued)

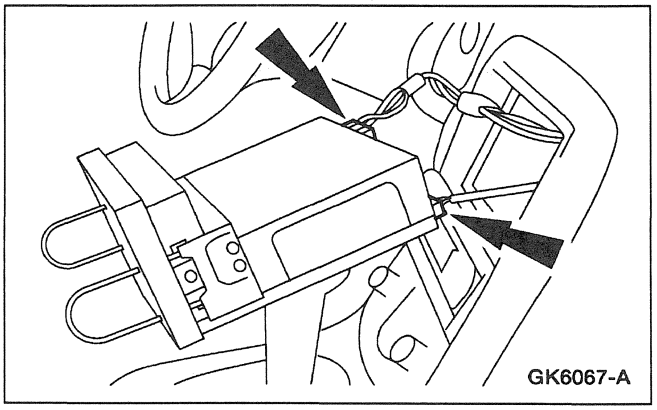

3. Disconnect the radio antenna lead in cable and the radio connectors.

Installation

1. **NOTE:** When the battery is disconnected and reconnected, some abnormal drive symptoms may occur while the vehicle relearns its adaptive strategy. The vehicle may need to be driven 16 km (10 mi) or more to relearn the strategy.

   To install, reverse the removal procedure.

Official Licensed Product
Ford Motor Company

CD Changer

Removal

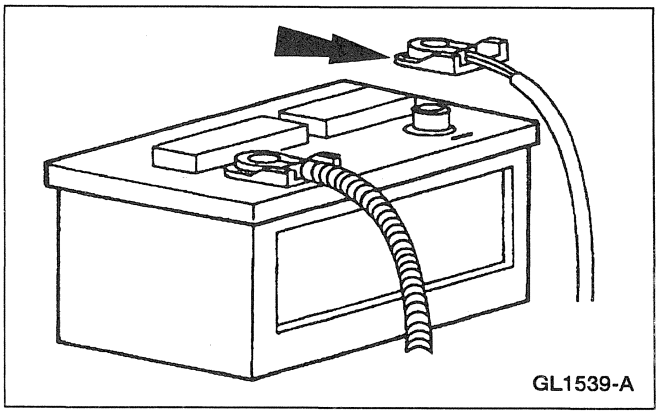

1. Disconnect the battery ground cable.

REMOVAL AND INSTALLATION (Continued)

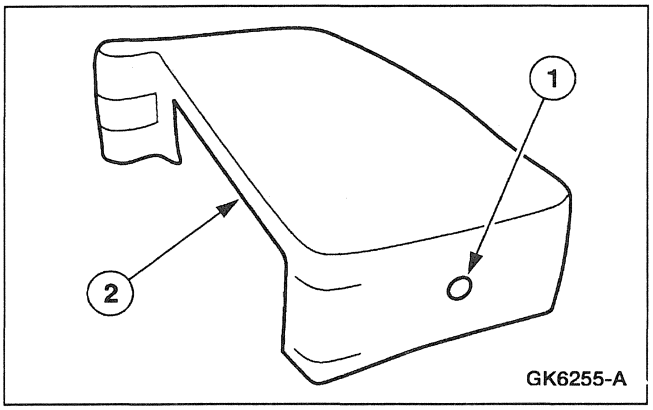

2. Remove the digital audio compact disc player cover.
   1 Remove the pushpin.
   2 Remove the digital audio compact disc player cover.

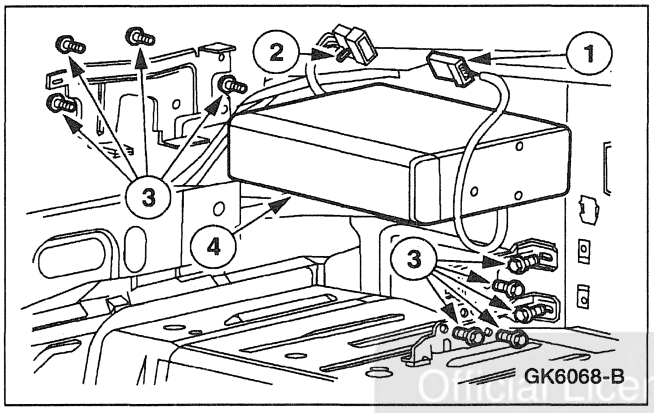

3. Remove the digital audio compact disc player.
   1 Disconnect the electrical connector.
   2 Unclip the wiring.
   3 Remove the retaining bolts.
   4 Remove the digital audio compact disc player.

Official Licensed Product
Ford Motor Company

Installation

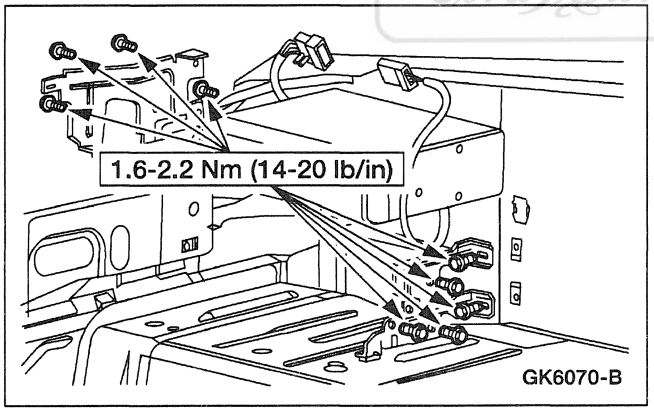

1. **NOTE:** When the battery is disconnected and reconnected, some abnormal drive symptoms may occur while the vehicle relearns its adaptive strategy. The vehicle may need to be driven 16 km (10 mi) or more to relearn the strategy.

   To install, reverse the removal procedure.

REMOVAL AND INSTALLATION (Continued)

Radio Amplifier

Removal

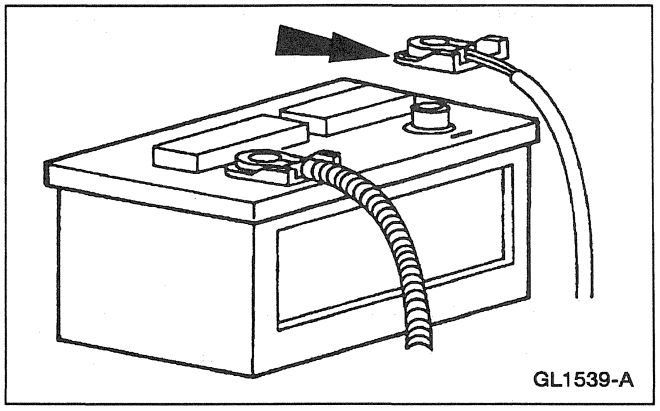

1. Disconnect the battery ground cable.

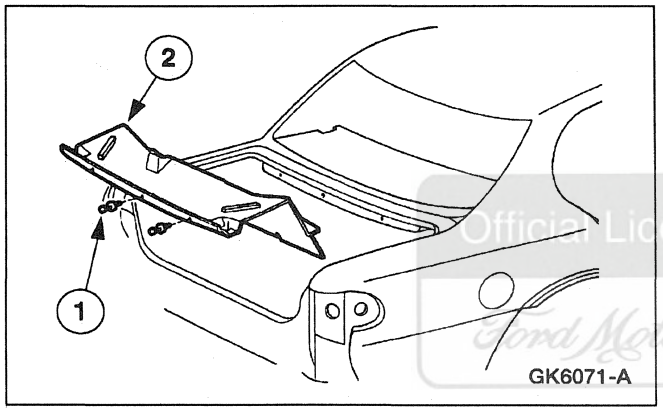

2. Remove the luggage compartment cover.
   1 Remove the pushpins.
   2 Remove the luggage compartment cover.

Official Licensed Product
Ford Motor Company

3. Remove the push pins and pull down the left side of the module tray.

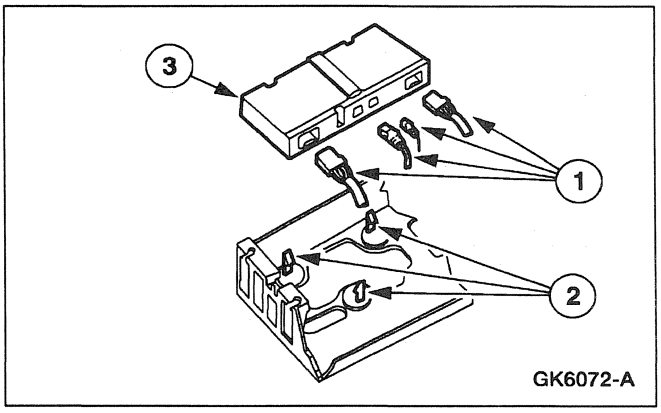

4. Remove the amplifier.
   1 Disconnect the electrical connectors.
   2 Unclip the amplifier.
   3 Remove the amplifier.

REMOVAL AND INSTALLATION (Continued)

Installation

1. **NOTE:** When the battery is disconnected and reconnected, some abnormal drive symptoms may occur while the vehicle relearns its adaptive strategy. The vehicle may need to be driven 16 km (10 mi) or more to relearn the strategy.

   To install, reverse the removal procedure.

SPECIFICATIONS

Torque Specifications

Description	Nm	Lb-In
Battery Ground Cable	7-10	62-88
Digital Audio Compact Disc Player Bolts	1.6-2.2	14-20

Official Licensed Product
Ford Motor Company

SECTION 415-02 Antenna

VEHICLE APPLICATION: Mark VIII

SUBJECT	PAGE
DESCRIPTION AND OPERATION	
Antenna	415-02-2
DIAGNOSIS AND TESTING	
Antenna	415-02-3
REMOVAL AND INSTALLATION	
Antenna	415-02-3
Antenna — Isolator Module	415-02-3
Cable — FM Antenna to Isolator Module	415-02-6
Cable — Radio Chassis to Isolator Module	415-02-4
SPECIFICATIONS	415-02-7

Official Licensed Product
Ford Motor Company

DESCRIPTION AND OPERATION

Antenna

Antenna System Component Location

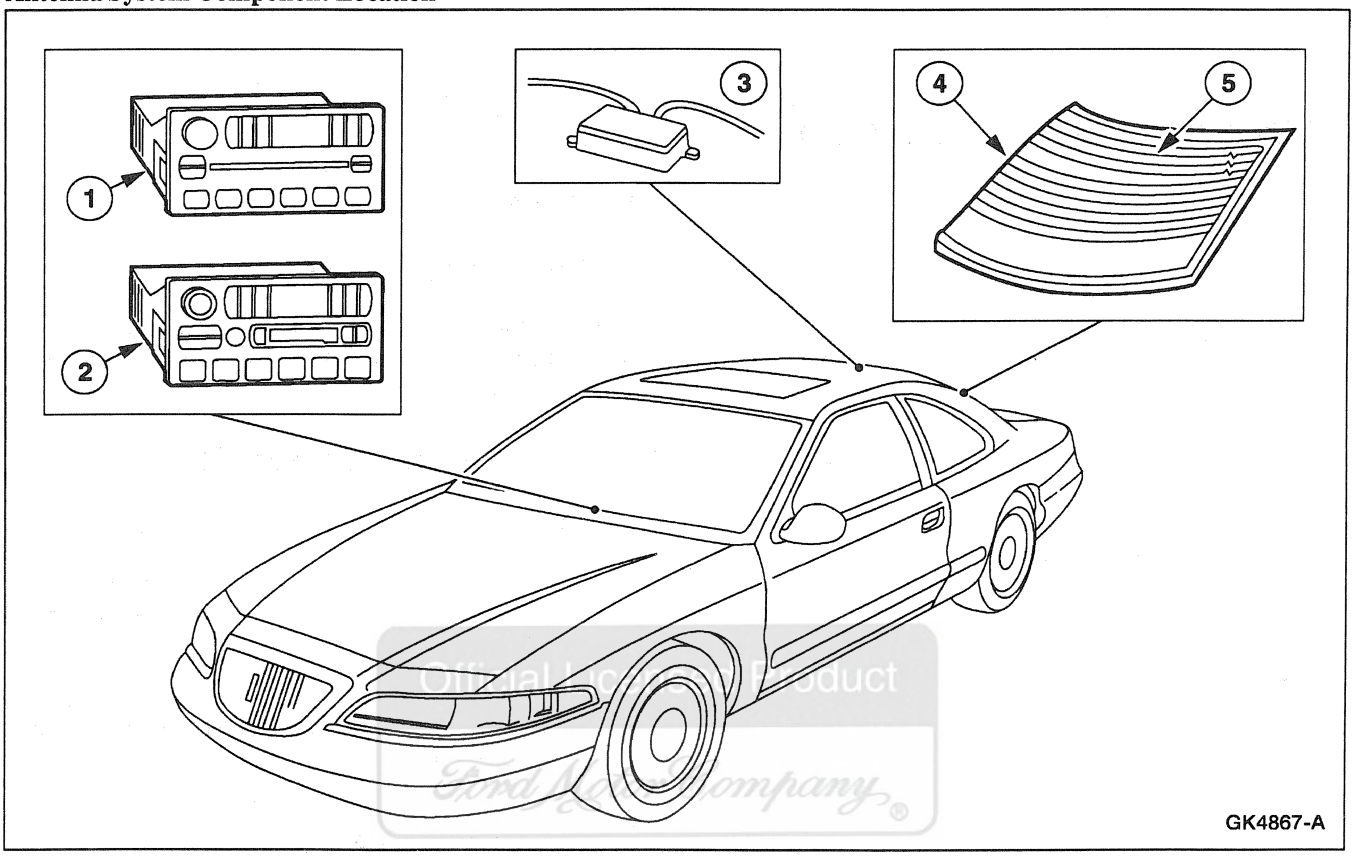

Item	Part Number	Description
1	18806	Radio Chassis (M100)
2	18806	Radio Chassis (P100)
3	18K891	Radio Antenna Isolator
4	—	Rear Window Defroster Grid/AM Antenna (Part of 42006)

Item	Part Number	Description
5	—	FM Antenna Tracing (Part of 42006)

(Continued)

The antenna is concealed on the inside of the back window glass (42006) in all vehicles.

The AM antenna consists of a:

- Rear window defroster grid on the interior of the rear window.
- Radio antenna isolator (18K891) mounted beneath the rear package tray trim.
- Coaxial cable connecting the radio antenna isolator to the radio chassis.

The FM antenna consists of a:

- Conductive tracing on the rear window above the rear window defroster grid.
- Radio antenna isolator mounted beneath the rear package tray trim.
- Radio antenna lead in cable connecting the FM antenna grid to the radio antenna isolator.
- Coaxial cable connecting the radio antenna isolator to the radio chassis.

DIAGNOSIS AND TESTING

Antenna

Refer to Section 415-00.

REMOVAL AND INSTALLATION

Antenna

Removal and Installation

The antenna is integral to the back window glass (42006) and can not be replaced separately; refer to Section 501-11.

Antenna — Isolator Module

Removal

1. Remove the quarter trim panel; refer to Section 501-05.
2. Remove the rear hi-mount lamp (13A613); refer to Section 417-01.
3. Remove the package tray.

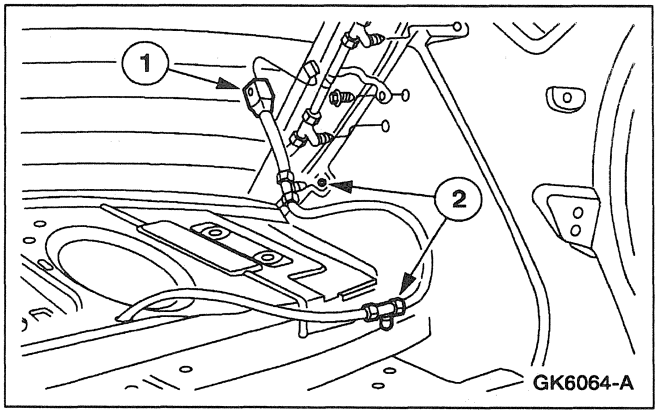

4. Position the rear window defroster grid cables aside.
   1 Disconnect the rear window defroster grid connectors
   2 Unclip the rear window defrost grid cables and position aside.

Official Licensed Product
Ford Motor Company

REMOVAL AND INSTALLATION (Continued)

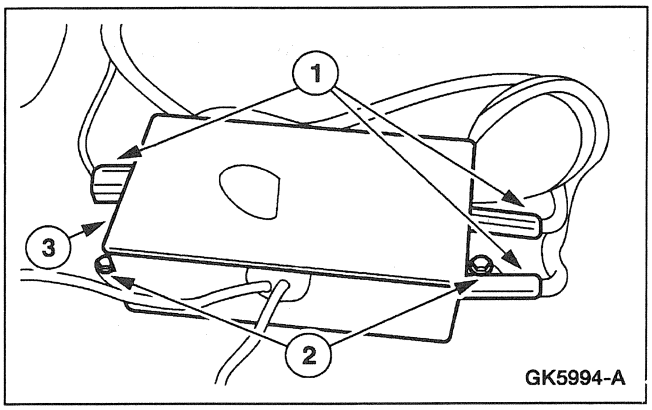

5. Remove the antenna isolator module.
   1 Disconnect the connectors.
   2 Remove the bolts.
   3 Remove the antenna isolator module.

Installation

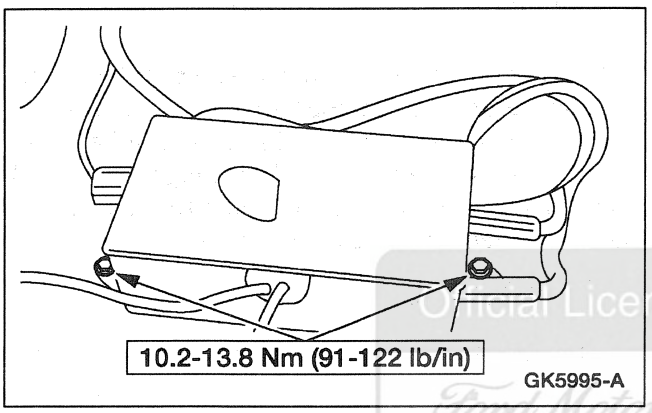

1. To install, reverse the removal procedure.

Official Licensed Product
Ford Motor Company

Cable — Radio Chassis to Isolator Module

Removal

⚠ **CAUTION: The antenna lead in cable is not removable from the rear lamp wiring. If the cable needs to be replaced, leave it in the rear lamp wiring. Install a new cable on top of the rear lamp wiring and secure it with wire ties. Do not cut into the rear lamp wiring to remove the existing antenna lead in cable.**

1. Remove the quarter trim panel; refer to Section 501-05.

2. Remove the rear hi-mount lamp (13A613); refer to Section 417-01.

3. Remove the package tray.

REMOVAL AND INSTALLATION (Continued)

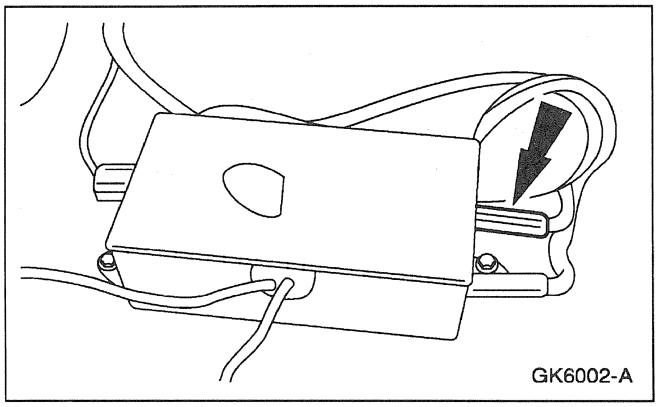

4. Disconnect the antenna lead in cable at the isolator.

5. Remove the radio; refer to Section 415-01.

Installation

⚠ **CAUTION: The antenna lead in cable is not removable from the wiring harness. If the cable needs to be replaced, leave it in the wiring harness. Install a new cable on top of the wiring harness and secure it with wire ties. Do not cut into the wiring harness to remove the existing antenna lead in cable.**

Official Licensed Product
Ford Motor Company

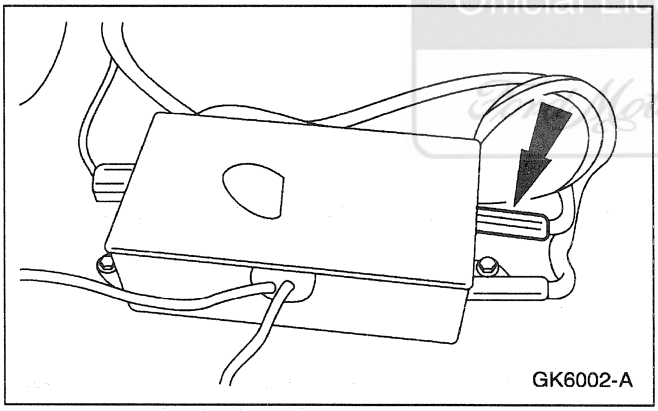

1. Connect the antenna lead in cable at the isolator.

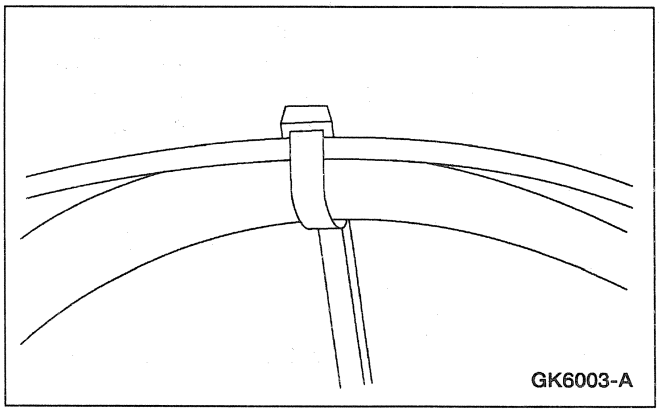

2. Install the new antenna lead in cable on top of the old one and secure it with wire ties.

REMOVAL AND INSTALLATION (Continued)

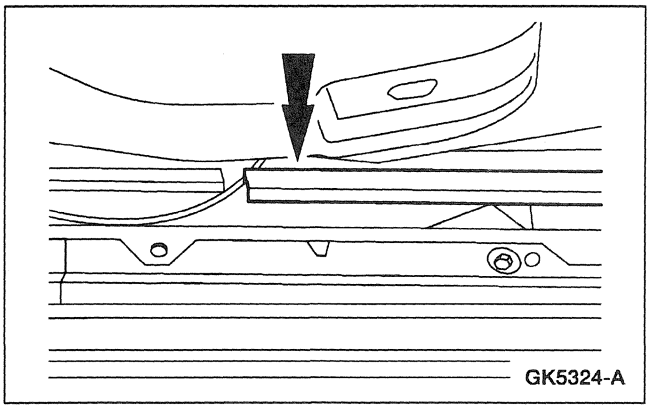

3. Install the new antenna lead in cable in the wiring harness conduit along the rocker panel.

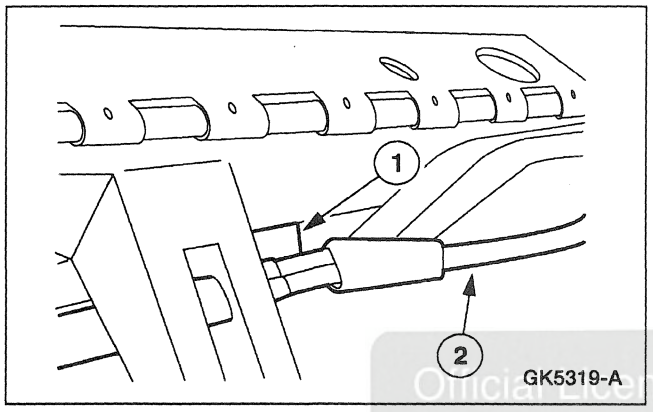

4. Position the antenna lead in cable in the dash.
   1 Install the wire ties.
   2 Position the antenna lead in cable.

Official Licensed Product
Ford Motor Company

5. Install the radio; refer to Section 415-01.
6. Install the package tray.
7. Install the rear hi-mount lamp; refer to Section 417-01.
8. Install the quarter trim panel; refer to Section 501-05.

Cable — FM Antenna to Isolator Module

Removal

1. Remove the quarter trim panel; refer to Section 501-05.
2. Remove the rear hi-mount lamp (13A613); refer to Section 417-01.
3. Remove the package tray.

REMOVAL AND INSTALLATION (Continued)

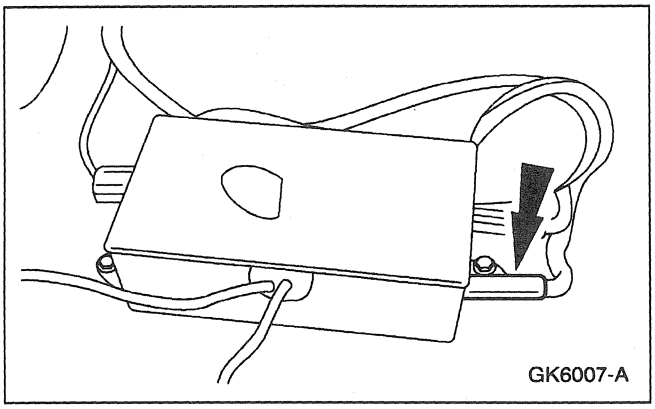

4. Disconnect the antenna lead in cable.

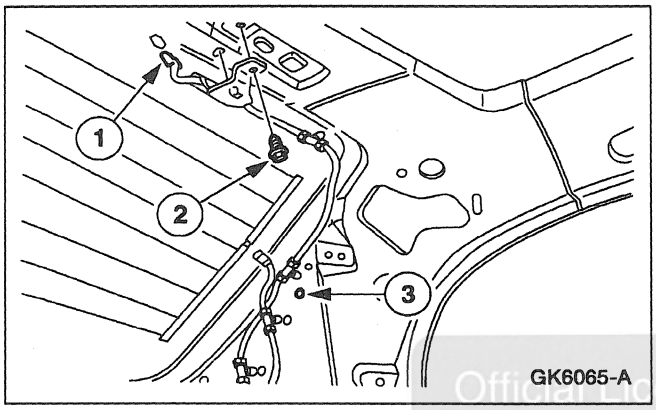

5. Remove the antenna lead in cable.
   1 Disconnect the connector.
   2 Remove the bolt.
   3 Unclip and remove the antenna lead in cable.

Official Licensed Product
Ford Motor Company

Installation

1. To install, reverse the removal procedures.

SPECIFICATIONS

Torque Specifications

Description	Nm	Lb-In
Battery Ground Cable	7-10	62-89
Radio Antenna Isolator Module Bolts	10.2-13.8	91-122

SECTION 415-03 Speakers

VEHICLE APPLICATION: Mark VIII

SUBJECT **PAGE**

DESCRIPTION AND OPERATION
Speakers 415-03-2
DIAGNOSIS AND TESTING
Speakers 415-03-2
REMOVAL AND INSTALLATION
Speaker — Door Mounted 415-03-3
Speaker — Rear 415-03-3
SPECIFICATIONS 415-03-4

Official Licensed Product
Ford Motor Company

DESCRIPTION AND OPERATION

Speakers

The standard JBL speaker system has a two speaker system in each door and quarter trim panel. The two speaker system includes one JBL tweeter and one JBL woofer.

JBL Speaker System

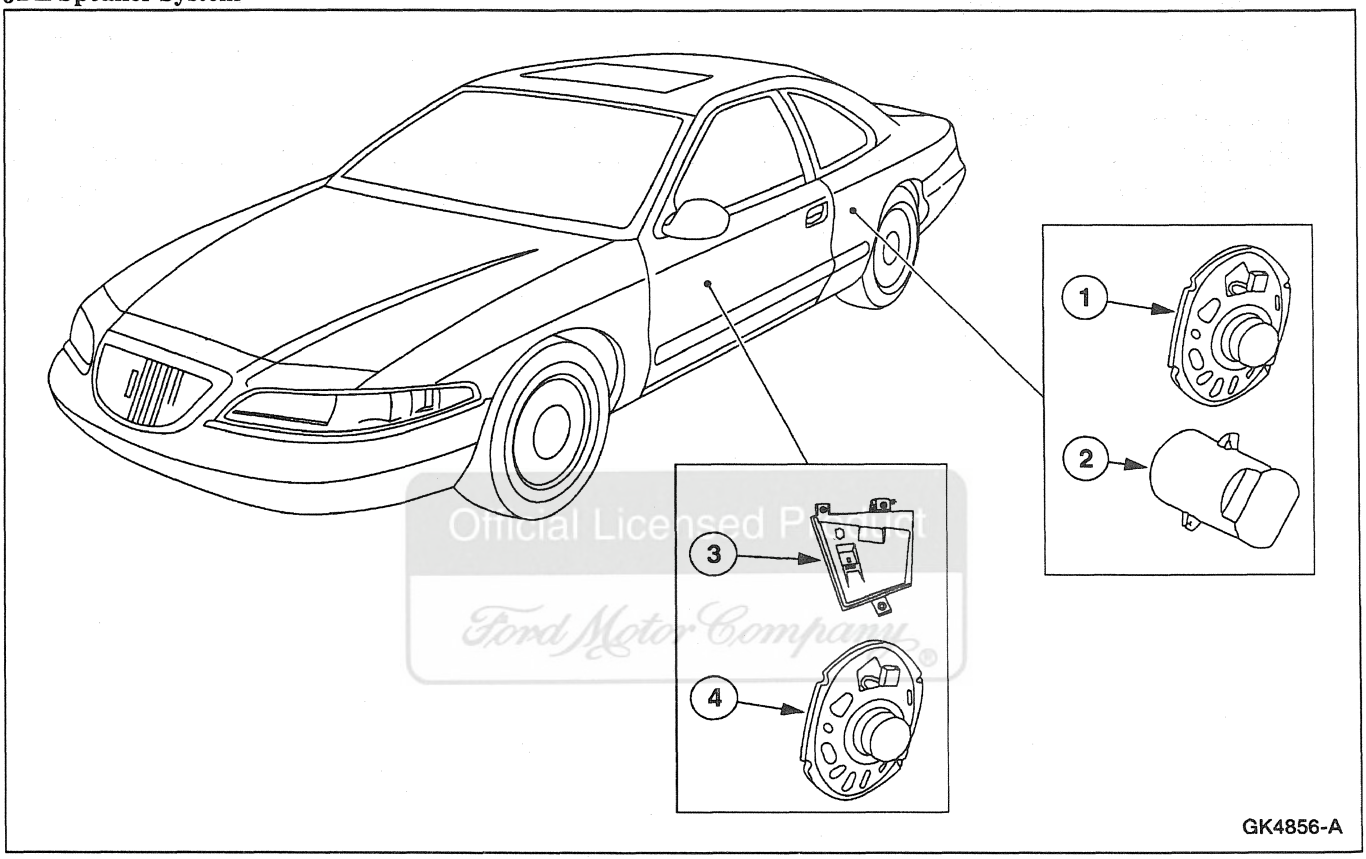

Item	Part Number	Description
1	18808	Radio Speaker, Quarter Trim Woofer
2	18808	Radio Speaker, Quarter Trim Tweeter

(Continued)

Item	Part Number	Description
3	18808	Radio Speaker, Door Tweeter
4	18808	Radio Speaker, Door Woofer

DIAGNOSIS AND TESTING

Speakers

Refer to Section 415-00.

REMOVAL AND INSTALLATION

Speaker — Door Mounted

Removal

1. Remove the door trim panel; refer to Section 501-05.

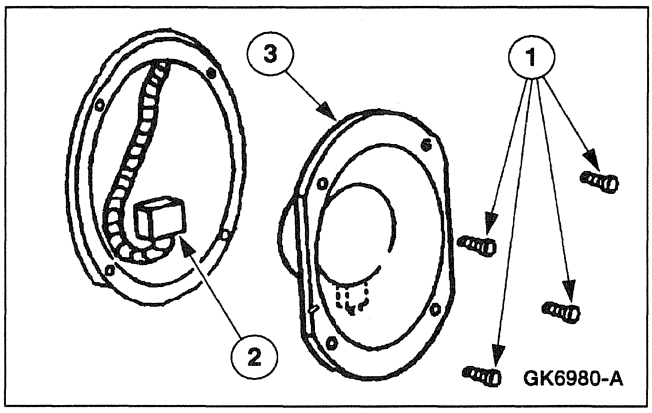

2. Remove the speaker.
   1 Remove the screws.
   2 Disconnect the electrical connector.
   3 Remove the speaker.

Installation

1. To install, reverse the removal procedure.

Official Licensed Product
Ford Motor Company

Speaker — Rear

Removal

1. Remove the quarter trim panel; refer to Section 501-05.

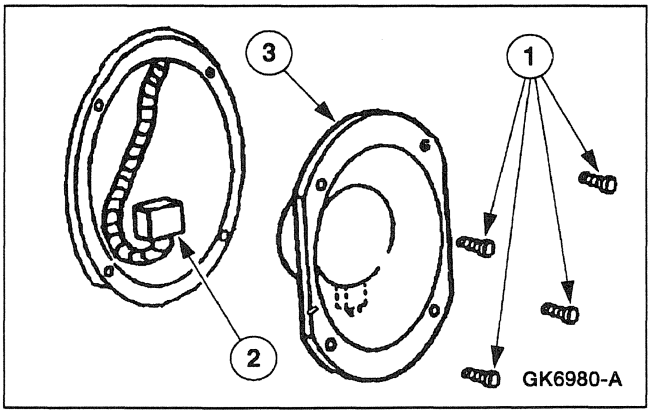

2. Remove the speaker.
   1 Remove the screws.
   2 Disconnect the electrical connector.
   3 Remove the speaker.

Installation

1. To install, reverse the removal procedure.

SPECIFICATIONS

Torque Specifications

Description	Nm	Lb/In
Battery Ground Cable	7-10	62-89

Official Licensed Product
Ford Motor Company

SECTION 417-01 Exterior Lighting

VEHICLE APPLICATION: Mark VIII

SUBJECT **PAGE**

DESCRIPTION AND OPERATION

Exterior Lighting 417-01-3

DIAGNOSIS AND TESTING

Backup Lamps 417-01-132
Inspection and Verification 417-01-132
Pinpoint Tests 417-01-133
Symptom Chart 417-01-132
Headlamps 417-01-5
Inspection and Verification 417-01-6
SCIL Active Command Index 417-01-9
SCIL Diagnostic Trouble Code (DTC) Index 417-01-6
SCIL Parameter Identification (PID) Index 417-01-8
Pinpoint Tests 417-01-11
Symptom Chart 417-01-10
Headlamps (With Autolamps) 417-01-69
Inspection and Verification 417-01-69
SCIL Active Command Index 417-01-72
SCIL Diagnostic Trouble Code (DTC) Index 417-01-70
SCIL Parameter Identification (PID) Index 417-01-72
Pinpoint Tests 417-01-74
Symptom Chart 417-01-73
Parking, Rear or License Lamps 417-01-119
Inspection and Verification 417-01-120
SCIL Active Command Index 417-01-123
SCIL Diagnostic Trouble Code (DTC) Index 417-01-120
SCIL Parameter Identification (PID) Index 417-01-122
Pinpoint Tests 417-01-125
Symptom Chart 417-01-124
Stoplamps 417-01-77
Inspection and Verification 417-01-77
SCIL Active Command Index 417-01-80
SCIL Diagnostic Trouble Code (DTC) Index 417-01-78
SCIL Parameter Identification (PID) Index 417-01-80
Pinpoint Tests 417-01-82
Symptom Chart 417-01-81
Turn Signal/Cornering/Hazard Lamps 417-01-90
Inspection and Verification 417-01-91
SCIL Active Command Index 417-01-94
SCIL Diagnostic Trouble Code (DTC) Index 417-01-91
SCIL Parameter Identification (PID) Index 417-01-93
Pinpoint Tests 417-01-95
Symptom Chart 417-01-95

REMOVAL AND INSTALLATION

Ballast — Low Beam Headlamp Bulb 417-01-152
Bulb — Headlamp 417-01-139
Lamp Assembly — Headlamp 417-01-136
Lamp Assembly — Hi-Mount Lamp 417-01-143
Lamp Assembly — Rear Lamp 417-01-144

Official Licensed Product Ford Motor Company

SUBJECT PAGE

Lamp Assembly — Stoplamp 417-01-142
Lamp Switch — Brake Pedal Position 417-01-149
Lamp Switch — Headlamp 417-01-146
Photocell/Amplifier 417-01-151

GENERAL PROCEDURES

Headlamp Adjustment 417-01-154
Headlamp Adjustment — Photocell/Amplifier 417-01-156

SPECIFICATIONS 417-01-156

Official Licensed Product
Ford Motor Company

DESCRIPTION AND OPERATION

Exterior Lighting

Exterior Lighting Components:

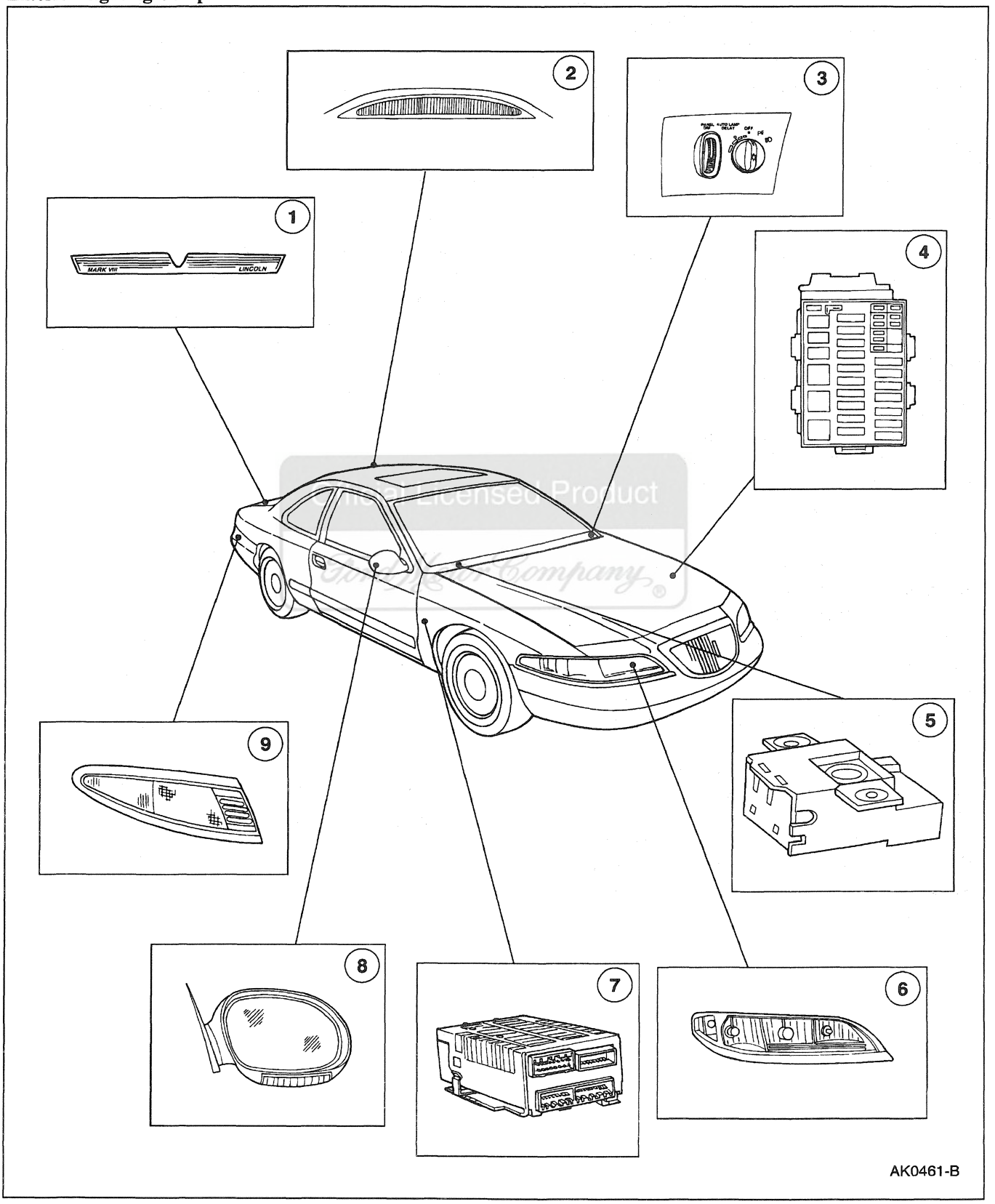

DESCRIPTION AND OPERATION (Continued)

Item	Part Number	Description
1	13A565	Neon Parking/Stoplamp
2	13A613	Rear Hi-Mount Lamp
3	11654	Headlamp Switch
4	14516	Power Distribution Box
5	13A018	Light Sensor Amplifier
6	13008	Headlamp
7	—	Steering Column/Ignition/Lighting (SCIL) Module
8	—	Illuminated Outside Rear View Mirror
9	13404	Tail Lamp/Stoplamp

(Continued)

Headlamps

- The low beam headlamps are high intensity discharge (HID) lighting. The steering column/ignition/lighting (SCIL) module controls the power source to the individual headlamp ballasts depending on the position of the autolamp switch, the headlamp switch (11654) and the dimmer switch.
- Power for both headlamp ballasts is constantly supplied to the SCIL module through a 60A maxifuse in the power distribution box and harness (14516) and through fuse junction panel fuse 19 (10A) for the LH ballast and fuse 25 (10A) for the RH ballast.
- The SCIL module will supply power to the LH and RH headlamp ballasts if the headlamp switch is in the low beam position and the headlamp switch is turned on or the autolamp system is operating.
- The SCIL module also monitors the windshield wiper operation. When the windshield wipers are turned to low or high speed, the SCIL module will turn on the low beam headlamps. If the windshield wipers are turned off, the headlamps will be turned off unless the autolamps are operating. The SCIL module uses a timing feature to detect intermittent wiper mode and will not turn on the headlamps in this mode. This function can be disabled through the vehicle settings on the message center indicator module.
- The high beam headlamps are halogen bulbs. The high beam headlamps are powered by the high beam relay located in the power distribution box and harness . The high beam relay is activated by the SCIL module which grounds the high beam relay coil when the dimmer switch is pulled toward the steering wheel (3600) . The first dimmer switch detent is flash-to-pass position and will illuminate the high beams until released. The second dimmer switch detent position is the high beam position and will illuminate the high beams until the dimmer switch is pulled to this position again.
- The SCIL module also controls the battery saver feature. If the headlamps are left on, the battery saver feature will automatically turn the headlamps off if:
  - — The ignition switch is turned to OFF.
  - — The headlamp switch is in the HEAD position.
  - — Ten minutes expire since the last input.

The SCIL module battery saver function will also turn the interior demand lighting off after 30 minutes expire. Refer to Section 417-02.

Headlamp Delay System — Autolamp

The autolamp system:

- Provides light sensitive ON-OFF control of exterior lamps.

Ford Licensed Product

DESCRIPTION AND OPERATION (Continued)

- Allows exterior lamps to remain lit for up to three minutes upon exiting the vehicle.
- Is controlled by the light sensor amplifier (13A018), located under the finish panel at the top right corner of the instrument panel (04320) , and the SCIL module.
- ON-OFF control and time delay adjustment is controlled by the headlamp switch . Turn the headlamp switch to the AUTOLAMP position, then adjust the time from minimum to maximum delay.
- Displays the current time delay period in the message center.

Daytime Running Lamps

Refer to Section 417-04.

Headlamp Switch

- Controls the parking lamps, headlamps and autolamp functions.
- The chime will sound if the headlamp switch is in PARK or HEAD position and the driver door is opened.

Panel Dim Switch

- Controls instrument panel illumination intensity by rotating the thumbwheel.
- Rotating the thumbwheel to the full up position turns ON the interior lamps.

Stoplamps

Consist of:

- Two rear lamps.
- Neon parking/stoplamp.
- Rear hi-mount lamp (13A613).

Turn Signal and Hazard Lamps

The turn signal system consists of:

- Multi-function switch (13K359).
- Steering column/ignition/lighting (SCIL) module.
- Redundant directional flashers in the outside rear view mirrors.
- Turn signal bulbs and circuitry.

The multi-function switch is an integrated switch design. When the multi-function switch is activated in either direction, or the hazard switch is engaged, a request is made from the multi-function switch to the SCIL module to flash the appropriate turn signal lamps, mirror indicators and turn signal indicators in the instrument cluster. The instrument cluster is equipped with a relay to provide an audible click anytime one or both of the indicators illuminates.

Official Licensee Ford Motor Company

DIAGNOSIS AND TESTING

Headlamps

Refer to Electrical and Vacuum Troubleshooting Manual, Cell 87, Automatic Headlamps/Delayed Exit for schematic and connector information.

DIAGNOSIS AND TESTING (Continued)

Refer to Electrical and Vacuum Troubleshooting Manual, Cell 58, Lighting Control Module for schematic and connector information.

Special Tool(s)

ST1137-A	73 Digital Multimeter or equivalent 105-R0051
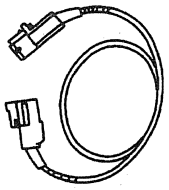 ST1695-A	Diagnostic Cable or equivalent F7LB-15A200-CA
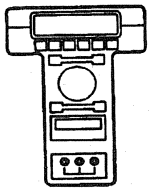 ST1217-A	New Generation STAR (NGS) Tester or equivalent 418-F048 (007-00500)

Inspection and Verification

1. **NOTE:** If the headlamp switch loses power, the steering column/ignition/lighting (SCIL) module will automatically default to the autolamp mode. With the ignition switch in RUN, the autolamp function will turn on the exterior lamps and the instrument panel lighting depending on the input of the light sensor amplifier as in normal operation. However, the exit delay will be defaulted to the full three minutes.

   Verify the customer concern by operating the headlamp/autolamp system to duplicate the condition.
2. Inspect to determine if one of the following electrical concerns apply:

Visual Inspection Chart

Electrical
• Circuitry open/shorted • Damaged light sensor amplifier • Damaged power distribution box fuse 2 (15A), fuse junction panel fuse 19 (10A), 26 (15A), 1 (10A), 25 (10A), 13 (15A), 7 (15A), 12 (10A) and 31 (10A) • Damaged headlamp switch • Burned-out bulb

3. If the concern remains after the inspection, connect the New Generation STAR (NGS) Tester to the data link connector (DLC) located beneath the instrument panel and select the vehicle to be tested from the NGS menu. If the NGS does not communicate with the vehicle:
   - checked that the program card is properly installed.
   - check the connections to the vehicle.
   - check the ignition switch position.
4. If the NGS still does not communicate with the vehicle, refer to the New Generation STAR Tester manual.
5. Perform the DATA LINK DIAGNOSTIC TEST. If the NGS responds with:
   - CKT914, CKT915 or CKT70 = ALL ECUS NO RESP/NOT EQUIP, refer to Section 418-00.
   - NO RESP/NOT EQUIP for SCIL module, go to Pinpoint Test H.
   - SYSTEM PASSED, retrieve and record the continuous diagnostic trouble codes (DTCs), erase the continuous DTCs and perform self-test diagnostics for the SCIL module.
6. If the DTCs retrieved are related to the concern, go to SCIL Diagnostic Trouble Code (DTC) Index to continue diagnostics.
7. If no DTCs related to the concern are retrieved, proceed to Symptom Chart to continue diagnostics.

SCIL Diagnostic Trouble Code (DTC) Index

SCIL Diagnostic Trouble Code (DTC) Index

DTC	Description	DTC Caused By	Action
C1446	Brake Switch Circuit Failure	SCIL	REFER to Section 206-05.
B1246	Panel Dim Potentiometer Switch Circuit Failure	SCIL	REFER to Section 417-02.

(Continued)

Official Licensed Product Ford Motor Company

DIAGNOSIS AND TESTING (Continued)

SCIL Diagnostic Trouble Code (DTC) Index

DTC	Description	DTC Caused By	Action
B1312	Lamp Headlamp Input Circuit Short to Battery	SCIL	GO to Pinpoint Test G.
B1334	Luggage Compartment Door Ajar Circuit Short to Ground	SCIL	REFER to Section 417-02.
B1342	ECU is Defective	SCIL	GO to Pinpoint Test A.
B1353	Ignition Key-In Circuit Open	SCIL	REFER to Section 501-12.
B1360	Ignition Run/ACC Circuit Open	SCIL	REFER to Section 501-12.
B1364	Ignition Run/Start Circuit Open	SCIL	REFER to Section 501-12.
B1446	Wiper Park Sense Circuit Failure	SCIL	GO to Pinpoint Test B.
B1485	Brake Pedal Input Short to B+	SCIL	GO to Pinpoint Test R.
B1490	Right Front Door Handle Short to Ground	SCIL	This is an invalid DTC. Do not attempt to repair.
B1498	Luggage Compartment Door Punch Out Sensor Shorted to Ground	SCIL	This is an invalid DTC. Do not attempt to repair.
B1509	Flash-to-Pass Switch Circuit Short to Battery	SCIL	GO to Pinpoint Test C.
B1522	Hood Switch Circuit Short to Ground	SCIL	REFER to Section 419-01A.
B1562	Door Lock Cylinder Circuit Short to Ground	SCIL	REFER to Section 419-01A.
B1566	Door Ajar Circuit Short to Ground	SCIL	REFER to Section 417-02.
B1600	PATS Ignition Key Transponder Signal Is Not Received	SCIL	REFER to Section 419-01B.
B1601	PATS Received Incorrect Key Code From Ignition Key Transponder	SCIL	REFER to Section 419-01B.
B1676	Battery Voltage Out of Range	SCIL	GO to Pinpoint Test D.
B1682	PATS is Disabled (Check Link Between PATS and Transponder)	SCIL	REFER to Section 419-01B.
B1687	Dome Lamp Input Circuit Short to Battery	SCIL	REFER to Section 417-02.
B1689	Autolamp Delay Circuit Failure	SCIL	GO to Pinpoint Test E.
B1796	Headlamp Low Beam Circuit Short to Battery	SCIL	GO to Pinpoint Test G.
B1875	Turn Signal/Hazard Switch Signal Circuit Short to Battery	SCIL	GO to Pinpoint Test V.
B1980	Bulb Outage Condition Detected	SCIL	GO to Pinpoint Test F.
B2328	Steering Column Reach Feedback Potentiometer Circuit Failure	SCIL	REFER to Section 211-05.
B2332	Steering Column Tilt Feedback Potentiometer Circuit Failure	SCIL	REFER to Section 211-05.
B2351	Steering Column Switch Signal Circuit Failure	SCIL	REFER to Section 211-05.
U1027	SCP Invalid or Missing Data for Engine RPM	PCM	REFER to Powertrain Control/Emissions Diagnosis Manual [1].
U1041	SCP Invalid or Missing Data for Vehicle Speed	ABS	REFER to Section 206-09, Inspection and Verification to continue diagnosis.
U1057	SCP Invalid or Missing Data for Vehicle Configuration	SCIL	REFER to Section 501-16, Inspection and Verification to continue diagnosis.

(Continued)

1 Can be purchased as a separate item.

DIAGNOSIS AND TESTING (Continued)

SCIL Diagnostic Trouble Code (DTC) Index

DTC	Description	DTC Caused By	Action
U1059	SCP Invalid or Missing Data for Transmission/Transaxle/PRNDL	PCM	REFER to Powertrain Control/Emissions Diagnosis Manual [2].
U1123	SCP Invalid or Missing Data for Odometer	ABS	REFER to Section 206-09, Inspection and Verification to continue diagnosis.
U1147	SCP Invalid or Missing Data for Vehicle Security	PCM	PERFORM J1850 Communication Network Diagnostics. GO to Communication Network Diagnostics in Section 418-00.
U1180	SCP Invalid or Missing Data for Personalization (Memory) Features	DDM	GO to Section 501-09, Inspection and Verification to continue diagnosis.
U1181	SCP Invalid or Missing Data for Personalization (Memory) Features	DDM	GO to Section 501-09, Inspection and Verification to continue diagnosis.
U1197	SCP Invalid or Missing Data for Door Locks	DDM	GO to Section 501-14B, Inspection and Verification to continue diagnosis.
U1198	SCP Invalid or Missing Data for External Access (Doors)	DDM	GO to Section 501-14B, Inspection and Verification to continue diagnosis.
U1199	SCP Invalid or Missing Data for External Access (Doors)	DDM	GO to Section 417-02, Inspection and Verification to continue diagnosis.
U1211	SCP Invalid or Missing Data for Restraints	DSM	GO to Section 413-08, Inspection and Verification to continue diagnosis.
U1222	SCP Invalid or Missing Data for Interior Lamps	DDM	GO to Section 501-14B, Inspection and Verification to continue diagnosis.

Official Licensed Product Ford Motor Company

SCIL Parameter Identification (PID) Index

SCIL Parameter Identification Index

PID	Description	Expected Values
CCNTSCI	Number of Continuous DTCs on SCIL	one count per bit
BOO__SCI	Brake Switch Input	ON, OFF
PRK__BRK	Parking Brake Switch Input	ON, OFF
TILT	Steering Column Tilt Switch	SHORT, UP, DOWN, OFF
TELESCP	Steering Column Telescope Switch	SHORT, IN, OUT, OFF
TILTPOS	Tilt Position Sensor	SENSED, notSEN
TELEPOS	Telescope Position Sensor	SENSED, notSEN
TURN__SW	Left and Right Turn Signal Switch	OFF, LEFT, RIGHT, SHORT
LBEAMSW	Low Beam Switch	ON, OFF
HBEAMSW	High Beam Switch	ON, OFF
PARK__SW	Parking Lamp Switch	ON, OFF
LIGHTSN	Ambient Light	DAY, NIGHT
FLASH	Flash to Pass Switch	ON, OFF
FTURN__L	Left and Right Front Turn Lamp	R__OPEN, L__OPEN, L/R__OPEN OK
RTURN__L	Left and Right Rear Turn Lamp	R__OPEN, L__OPEN, L/R__OPEN OK
TAILLMP	Left and Right Tail Lamp	OPEN, OK
LOWBEAM	Low Beam Lamp	R__OPEN, L__OPEN, L/R__OPEN OK
AUTOLMP	Autolamp Switch	ON, OFF

(Continued)

2 Can be purchased as a separate item.

DIAGNOSIS AND TESTING (Continued)

SCIL Parameter Identification Index

PID	Description	Expected Values
ALP__IMP	Autolamp Analog Input	0-100%
DOMESW	Dome Lamp Switch	ACTIVE, notACT
PANLDIM	Panel Dim Intensity Switch	0-100%
HOOD__SW	Hood Ajar Switch	AJAR, CLOSED
DECKLID	Decklid Ajar Switch	AJAR, CLOSED
P__DR__SW	Passenger Door Ajar Switch	AJAR, CLOSED
IGN__KEY	Ignition Key In/Out	IN, OUT
IGN__SCI	Ignition Switch	START, RUN, OFF, ACCSSY
WPPRKSW	Windshield Wiper Park Sense	notPRK, PARKED
NUMKEYS	Number of Ignition Key Codes Supported	BCD (valid range 0-16)
DRLKCYL	Door Lock Cylinder	ON, OFF
ENABLE	PATS System Status	ON, OFF
FAILSAF	PATS System Status	ON, OFF

SCIL Active Command Index

SCIL Active Command Index

Active Command	Display	Action
PID LATCH	PID LATCH	ON, OFF
ONE TOUCH WINDOW DWN & ACCY DELAY	ACCY RLY	ON, OFF
WARNING LAMPS AND CHIME	CHIME	ON, OFF
	ANTI-THEFT	ON, OFF
	AUTOLMP	ON, OFF
	HIGH BEAM	ON, OFF
INTERIOR COURTESY LAMPS	INT LAMPS MIRRORLMP	ON, OFF ON, OFF
DECKLID RELEASE	RELEASE	ON, OFF
TURN SIGNAL AND MARKER LAMPS	LF TURN	ON, OFF
	RF TURN	ON, OFF
	LR TURN	ON, OFF
	RR TURN	ON, OFF
	PARKLAMPS	ON, OFF
HEADLAMP CONTROL	LEFT LOW	ON, OFF
	RIGHT LOW	ON, OFF
	HIGH BEAM	ON, OFF
	DRUN LAMP	ON, OFF
	LF CORNER	ON, OFF
	RF CORNER	ON, OFF
HORN CONTROL	HORN	ON, OFF
BACKLIGHTING INTENSITY	INTENSITY	0%-100%
COURTESY LAMP INTENSITY	INTENSITY	0%-100%
DOOR AJAR SIGNAL	DOOR AJAR	ON, OFF
TRANSMIT SIGNAL COMMAND	TRANSMIT	ON, OFF

(Continued)

Ford Motor Company

DIAGNOSIS AND TESTING (Continued)

SCIL Active Command Index

Active Command	Display	Action
BRAKE SYSTEM	BRK/SHIFT	ON, OFF
	PARK BRK	ON, OFF
STEERING COLUMN CONTROL	TILT UP	ONE SECOND TIME OUT
	TILT DOWN	ONE SECOND TIME OUT
	TELSCP IN	ONE SECOND TIME OUT
	TELSCPOUT	ONE SECOND TIME OUT
KEYCODE ERASE TIME SET	MINUTES	8-63 MINUTES

Symptom Chart

Refer to the Electrical and Vacuum Troubleshooting Manual for connector numbers cited in the pinpoint tests.

Symptom Chart

Condition	Possible Source	Action
• No Communication With the Steering Column/Ignition/Lighting Module	• SCIL module. • Circuitry.	• GO to Pinpoint Test H.
• Low Beams Flash On and Turn Off	• Headlamp bulb.	• REPLACE the headlamp bulbs according to Ford specifications.
• One Low Beam Headlamp Is Inoperative	• Circuitry. • Fuse. • SCIL module. • Headlamp bulb.	• GO to Pinpoint Test J.
• The Low Beams Are Inoperative	• SCIL module. • Headlamp switch. • Circuitry.	• GO to Pinpoint Test K.
• The High Beams Are Inoperative	• SCIL module. • Multi-function switch. • High beam headlamp relay. • Circuitry.	• GO to Pinpoint Test L.
• One High Beam Headlamp Is Inoperative	• Circuitry. • Bulb.	• REPAIR as required.
• The Headlamps Are On Continuously — Low Beam	• SCIL module. • Circuitry.	• GO to Pinpoint Test M.
• The Headlamps Are On Continuously — High Beam	• SCIL module. • High beam headlamp relay. • Circuitry.	• GO to Pinpoint Test N.
• The Flash-to-Pass Feature Is Inoperative	• SCIL module. • Multi-function switch. • Circuitry.	• GO to Pinpoint Test P.
• High Beam Indicator Inoperative	• SCIL module. • Hybrid electronic instrument cluster (HEC). • Circuitry.	• REFER to Section 413-01.
• High Beam Indicator Always On	• SCIL module. • Circuitry. • HEC.	• REFER to Section 413-01.

Official Licensed Product Ford Motor Company

DIAGNOSIS AND TESTING (Continued)

Pinpoint Tests

PINPOINT TEST A: DTC B1342: ECU DEFECTIVE

TEST CONDITIONS	TEST DETAILS/RESULTS/ACTIONS
A1 REPEAT THE SELF TEST	
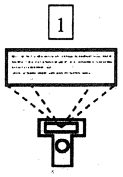 Clear SCIL Module DTCs 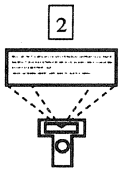 SCIL Module Self-Test	• Is DTC B1342 retrieved? → **Yes** REPLACE the SCIL module. RETEST the system. → **No** REPAIR any retrieved DTCs. RETEST the system.

PINPOINT TEST B: DTC B1446: WIPER PARK SENSE CIRCUIT FAILURE

TEST CONDITIONS	TEST DETAILS/RESULTS/ACTIONS
B1 CHECK PID WPPRKSW	
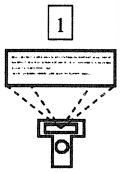 SCIL Module PID WPPRKSW	• Does PID WPPRKSW indicate not PRK? → **Yes** GO to **B2**. → **No** GO to **B4**.

Official Licensed Ford Motor Company

(Continued)

DIAGNOSIS AND TESTING (Continued)

PINPOINT TEST B: DTC B1446: WIPER PARK SENSE CIRCUIT FAILURE (Continued)

TEST CONDITIONS	TEST DETAILS/RESULTS/ACTIONS
B2 REPEAT THE SELF-TEST	
1 SCIL Module Self-Test	• Is DTC B1446 retrieved? → **Yes** REPLACE the Steering Column/Ignition/Lighting (SCIL) module. RETEST the system. → **No** GO to **B3**.
B3 CHECK FOR AN INTERMITTENT SHORT TO VOLTAGE	
1 SCIL Module Active Command PIDLATCH 2 Select PID WPPRKSW	3 Tap on the connectors and flex the harness between the windshield wiper motor and the SCIL module. • Does PID WPPRKSW change states? → **Yes** REPAIR the harness or connector flexed when PID latched for an intermittent short to voltage. RETEST the system. → **No** CHECK the windshield wiper operation, particularly for binding or blocked linkage. REFER to Section 501-16.

Official Licensed Product Ford Motor Company

(Continued)

DIAGNOSIS AND TESTING (Continued)

PINPOINT TEST B: DTC B1446: WIPER PARK SENSE CIRCUIT FAILURE (Continued)

TEST CONDITIONS	TEST DETAILS/RESULTS/ACTIONS
B4 CHECK THE WINDSHIELD WIPER MOTOR	
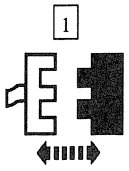 Windshield Wiper Motor C197 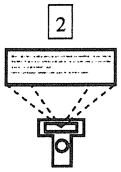 SCIL Module PID WPPRKSW	• Does PID WPPRKSW read PARKED? → **Yes** GO to **B5**. → **No** GO to **B7**.
B5 CHECK THE SCIL MODULE	
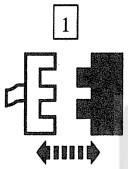 SCIL Module C288 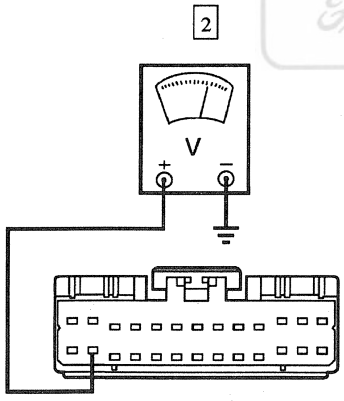 AK1222-A	2 Connect a voltmeter between SCIL module C288-15, circuit 28 (BK/PK) and ground. • Is the voltage reading B+? → **Yes** GO to **B6**. → **No** REPLACE the SCIL module. RETEST the system.

Official Licensed Product
Ford Motor Company

(Continued)

DIAGNOSIS AND TESTING (Continued)

PINPOINT TEST B: DTC B1446: WIPER PARK SENSE CIRCUIT FAILURE (Continued)

TEST CONDITIONS	TEST DETAILS/RESULTS/ACTIONS
B6 CHECK CIRCUIT 28 (BK/PK) FOR SHORT TO B+	
1 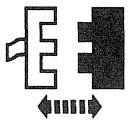 Windshield Wiper Control Module C226 2 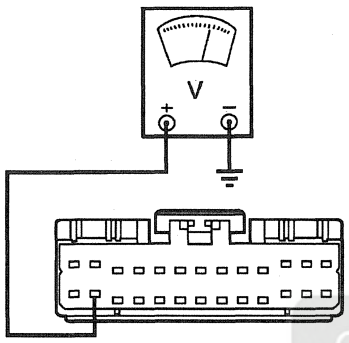 AK1222-A	2 Connect a voltmeter between SCIL module C288, circuit 28 (BK/PK), and ground. • Is the voltage reading B+? → **Yes** REPAIR circuit 28 (BK/PK). RETEST the system. → **No** REPLACE the windshield wiper control module. RETEST the system.
B7 CHECK THE WINDSHIELD WIPER SYSTEM	
1 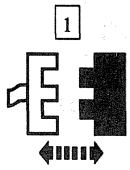 Windshield Wiper Control Module C226 2 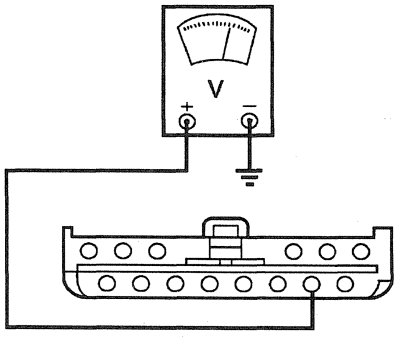 AK1223-A	2 Connect a voltmeter between windshield wiper control module C226-6, circuit 28 (BK/PK), and ground. • Is the voltage reading B+? → **Yes** REPAIR circuit 28 (BK/PK). RETEST the system. → **No** REFER to Section 501-16.

Official Licensed Product
Ford Motor Company

DIAGNOSIS AND TESTING (Continued)

PINPOINT TEST C: DTC B1509: FLASH-TO-PASS SWITCH CIRCUIT SHORT TO BATTERY

TEST CONDITIONS	TEST DETAILS/RESULTS/ACTIONS
C1 CHECK FOR DTC B1875	
	1 Check the continuous DTCs recorded during inspection and verification. • Are both DTCs B1509 and B1875 stored as continuous DTCs? → **Yes** REPAIR circuit 1041 (BR/O). RETEST the system. → **No** GO to **C2**.
C2 CHECK PID FLASH	
1 SCIL Module PID FLASH	• Does PID FLASH read ON? → **Yes** GO to **C5**. → **No** GO to **C3**.
C3 CHECK PID HBEAMSW	
1 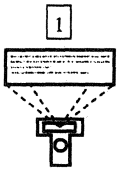 SCIL Module PID HBEAMSW	• Does PID HBEAMSW read ON? → **Yes** GO to **C5**. → **No** GO to **C4**.

(Continued)

Official Licensed Product
Ford Motor Company®

DIAGNOSIS AND TESTING (Continued)

PINPOINT TEST C: DTC B1509: FLASH-TO-PASS SWITCH CIRCUIT SHORT TO BATTERY (Continued)

TEST CONDITIONS	TEST DETAILS/RESULTS/ACTIONS
C4 CHECK CIRCUIT 1042 (R/O) FOR A SHORT TO VOLTAGE	
1 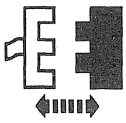 SCIL Module C286 2 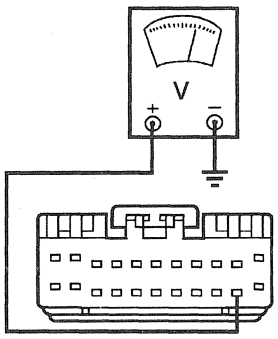 AK1224-A	2 Connect a voltmeter between steering column/ignition/lighting (SCIL) module C286-21, circuit 1042 (R/O), and ground. • Is the voltage reading B+? → **Yes** REPAIR circuit 1042 (R/O). RETEST the system. → **No** GO to **C6**.
C5 CHECK FOR DTC	
1 SCIL Module C286 2 SCIL Module Self-Test	• Is DTC **B1509** retrieved? → **Yes** REPLACE the SCIL module. RETEST the system. → **No** USE the SCIL module active command PID LATCH to identify intermittent concern. RETEST the system.

Official Licensed Product
Ford Motor Company

(Continued)

DIAGNOSIS AND TESTING (Continued)

PINPOINT TEST C: DTC B1509: FLASH-TO-PASS SWITCH CIRCUIT SHORT TO BATTERY (Continued)

TEST CONDITIONS	TEST DETAILS/RESULTS/ACTIONS
C6 CHECK PIDS FLASH AND HBEAMSW WITH THE MULTI-FUNCTION SWITCH DISCONNECTED	
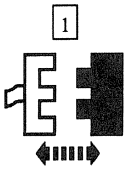 Multi-Function Switch 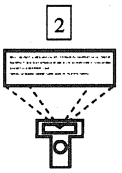 SCIL Module PID FLASH and HBEAMSW	• Does PID FLASH or HBEAMSW read ON? → **Yes** GO to **C7**. → **No** REPLACE the multi-function switch. RETEST the system.
C7 CHECK PIDS FLASH AND HBEAMSW WITH THE SCIL MODULE DISCONNECTED	
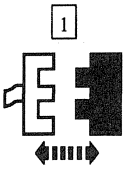 SCIL Module C286 SCIL Module PID FLASH and HBEAMSW	• Does either PID FLASH or HBEAMSW read ON? → **Yes** REPLACE the SCIL module. RETEST the system. → **No** REPAIR circuit 1042 (R/O). RETEST the system.

Official Licensed Product Ford Motor Company

DIAGNOSIS AND TESTING (Continued)

PINPOINT TEST D: DTC B1676: BATTERY VOLTAGE OUT OF RANGE

TEST CONDITIONS	TEST DETAILS/RESULTS/ACTIONS
D1 CHECK THE BATTERY VOLTAGE	
1 2 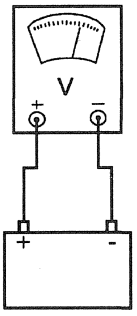 AH0206-A	2 Connect a voltmeter between the positive and negative post of the battery. • Is the voltage less than 10 volts? → **Yes** REPAIR the battery or charging system. REFER to Section 414-00. → **No** GO to **D2**.
D2 CHECK THE CHARGING SYSTEM	
1 3 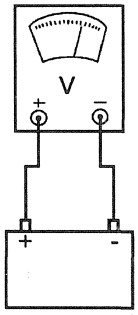 AH0206-A	2 Increase the engine speed to 2000 rpm. 3 Connect a voltmeter between the positive and negative post of the battery. • Is the voltage over 16 volts? → **Yes** REPAIR the battery or charging system. REFER to Section 414-00. → **No** GO to **D3**.

(Continued)

Official Licensed Product
Ford Motor Company

DIAGNOSIS AND TESTING (Continued)

PINPOINT TEST D: DTC B1676: BATTERY VOLTAGE OUT OF RANGE (Continued)

TEST CONDITIONS	TEST DETAILS/RESULTS/ACTIONS
D3 CHECK THE GROUNDS	
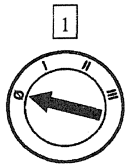 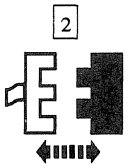 SCIL Module 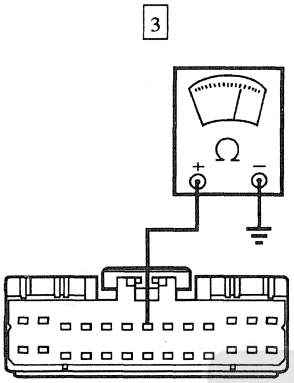 AK1225-A 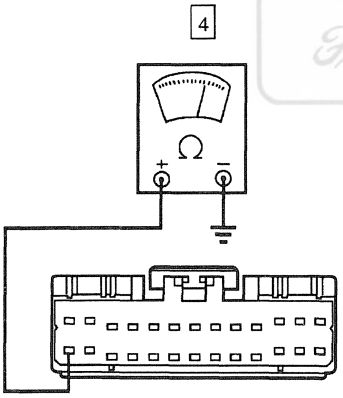 AK1226-A	3 Connect an ohmmeter between SCIL module C287-7, circuit 57 (BK), and ground. 4 Connect an ohmmeter between SCIL module C288-14, circuit 875 (BK/LB), and ground. • Are both readings 5 ohms or less? → **Yes** The system is operating properly. CHECK SCIL module C287 and C288 for loose, corroded or pushed out terminals. CLEAR DTCs and RETEST the system. → **No** REPAIR circuit 57 (BK) or circuit 875 (BK/LB) for a high resistance short or an open. RETEST the system.

Official Licensed Product
Ford Motor Company

DIAGNOSIS AND TESTING (Continued)

PINPOINT TEST E: DTC B1689: AUTOLAMP DELAY CIRCUIT FAILURE

TEST CONDITIONS	TEST DETAILS/RESULTS/ACTIONS
E1 CHECK AUTOLAMP PID	
1 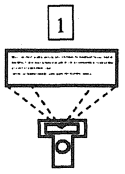 SCIL Module PID AUTOLMP	2 Turn the autolamp switch from stop to stop. • Does PID AUTOLMP read OFF with the switch in the OFF position? → **Yes** GO to **E12.** → **No** GO to **E2.**
E2 CHECK THE SWITCH SUPPLY	
1 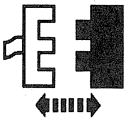 Headlamp Switch C262 2 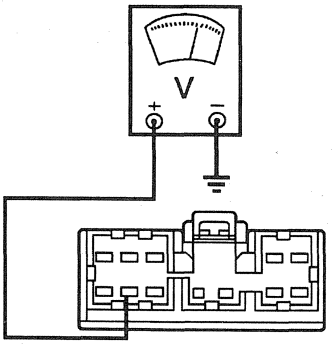 AK1227-A	2 Connect a voltmeter between headlamp switch C262-7, circuit 1055 (W/LG), and ground. • Is the voltage reading B+? → **Yes** GO to **E3.** → **No** GO to **E6.**

Official Licensed Product
Ford Motor Company

(Continued)

DIAGNOSIS AND TESTING (Continued)

PINPOINT TEST E: DTC B1689: AUTOLAMP DELAY CIRCUIT FAILURE (Continued)

TEST CONDITIONS	TEST DETAILS/RESULTS/ACTIONS
E3 CHECK CIRCUIT 188 (W/BK) FOR A SHORT TO GROUND	
1 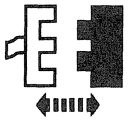 SCIL Module C286 2 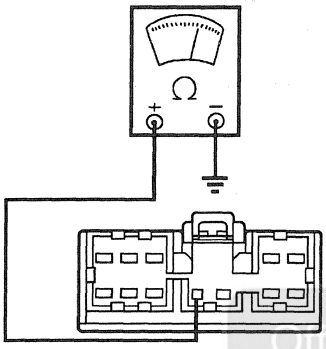 AK1228-A	2 Connect an ohmmeter between headlamp switch C262-9, circuit 188 (W/BK), and ground. • Is the resistance 10 kohms or less? → **Yes** REPAIR circuit 188 (W/BK). RETEST the system. → **No** GO to **E4**.
E4 CHECK PID ALP__IMP WITH BATTERY INPUT	
1 SCIL Module PID ALP__IMP 2 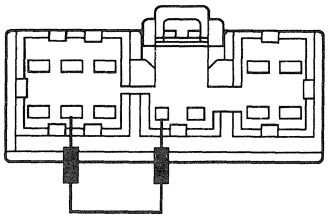 AK1229-A	2 Connect a jumper wire between headlamp switch C262-7, circuit 1055 (W/LG), and headlamp switch C262-9, circuit 188 (W/BK). • Does PID ALP__IMP read 0%? → **Yes** REPLACE the headlamp switch. RETEST the system. → **No** GO to **E5**.

Official Licensed Product
Ford Motor Company

(Continued)

DIAGNOSIS AND TESTING (Continued)

PINPOINT TEST E: DTC B1689: AUTOLAMP DELAY CIRCUIT FAILURE (Continued)

TEST CONDITIONS	TEST DETAILS/RESULTS/ACTIONS
E5 CHECK CIRCUIT 188 (W/BK)	
1 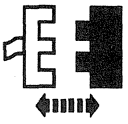 SCIL Module C286 2 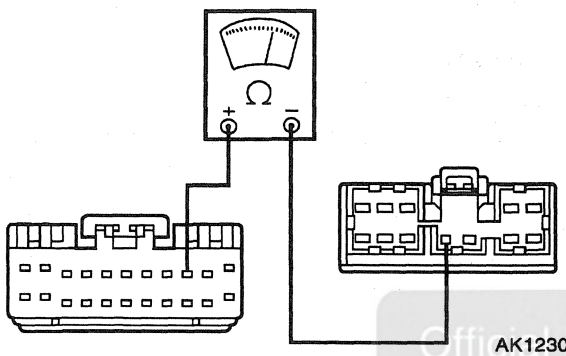 AK1230-A	2 Connect an ohmmeter between steering column/ignition/lighting (SCIL) module C286-9 and headlamp switch C262-9, circuit 188 (W/BK). • Is the resistance less than 5 ohms? → **Yes** REPLACE the SCIL module. RETEST the system. → **No** REPAIR circuit 188 (W/BK). RETEST the system.
E6 CHECK FOR DEFAULT MODE	
1 Headlamp Switch C262	2 Cover the autolamp light sensor amplifier located on the top right of the instrument panel. • Does the LH low beam headlamp turn on with all other exterior lamps when the SCIL module defaults to ON? → **Yes** REPAIR circuit 1055 (W/LG) for an open between the fuse junction panel and the headlamp switch. → **No** GO to **E7**.

Official Licensed Product Ford Motor Company

(Continued)

DIAGNOSIS AND TESTING (Continued)

PINPOINT TEST E: DTC B1689: AUTOLAMP DELAY CIRCUIT FAILURE (Continued)

TEST CONDITIONS	TEST DETAILS/RESULTS/ACTIONS
E7 CHECK THE SUPPLY CIRCUIT	
1 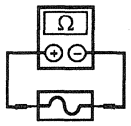 Fuse Junction Panel Fuse 19 (10A)	• Is the fuse OK? → **Yes** REPAIR circuit 1055 (W/LG). RETEST the system. → **No** GO to **E8**.
E8 CHECK THE LH LOW BEAM CIRCUIT	
1 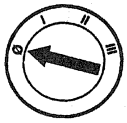 2 LH Low Beam Ballast C1003 3 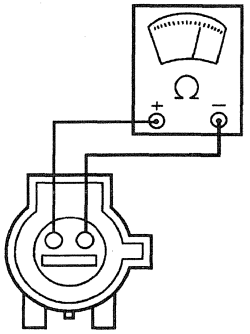 AK1437-A	3 Connect an ohmmeter between the LH low beam ballast C1003, circuit 57 (BK), and circuit 160 (DB/W). • Is the resistance reading 10 kohms or less? → **Yes** GO to **E9**. → **No** GO to **E10**.

Ford Motor Company

(Continued)

DIAGNOSIS AND TESTING (Continued)

PINPOINT TEST E: DTC B1689: AUTOLAMP DELAY CIRCUIT FAILURE (Continued)

TEST CONDITIONS	TEST DETAILS/RESULTS/ACTIONS
E9 CHECK CIRCUIT 160 (DB/W) FOR A SHORT TO GROUND	
1 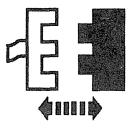 SCIL Module C287 2 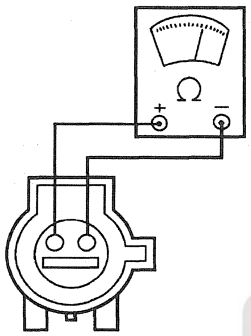 AK1437-A	2 Connect an ohmmeter between the LH low beam ballast C1003, circuit 57 (BK), and circuit 160 (DB/W). • Is the resistance reading 10 kohms or less? → **Yes** REPAIR circuit 160 (DB/W). RETEST the system. → **No** REPLACE the SCIL module. RETEST the system.
E10 CHECK FOR A SYSTEM SHORT TO GROUND	
1 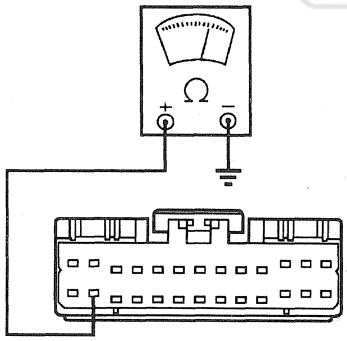 AK1231-A	1 Connect an ohmmeter between the SCIL module C287-15, circuit 1055 (W/LG), and ground. • Is the resistance 10 kohms or less? → **Yes** GO to **E11**. → **No** REPLACE the SCIL module. RETEST the system.

Official Licensed Product
Ford Motor Company

(Continued)

DIAGNOSIS AND TESTING (Continued)

PINPOINT TEST E: DTC B1689: AUTOLAMP DELAY CIRCUIT FAILURE (Continued)

TEST CONDITIONS	TEST DETAILS/RESULTS/ACTIONS
E11 CHECK THE HEADLAMP SWITCH FOR A SHORT TO GROUND	
1 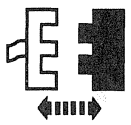 Headlamp Switch C262 2 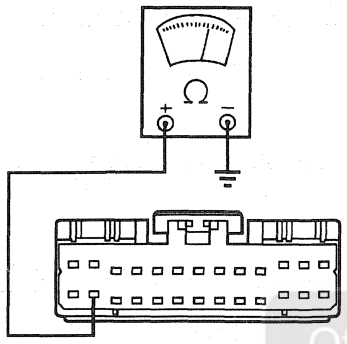 AK1231-A	2 Connect an ohmmeter between SCIL module C287-15, circuit 1055 (W/LG), and ground. • Is the resistance 10 kohms or less? → **Yes** REPAIR circuit 1055 (W/LG). RETEST the system. → **No** REPLACE the headlamp switch. RETEST the system.
E12 REPEAT THE SELF-TEST	
1 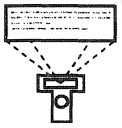 SCIL Module Self-Test	• Is DTC B1689 retrieved? → **Yes** REPLACE the SCIL module. RETEST the system. → **No** GO to **E13**.

Official Licensed Product
Ford Motor Company

(Continued)

DIAGNOSIS AND TESTING (Continued)

PINPOINT TEST E: DTC B1689: AUTOLAMP DELAY CIRCUIT FAILURE (Continued)

TEST CONDITIONS	TEST DETAILS/RESULTS/ACTIONS
E13 CHECK FOR AN INTERMITTENT CONCERN	
1 SCIL Module Active Command PIDLATCH 2 Select PID AUTOLMP	3 Tap on the connectors and flex the harness between the headlamp switch and the SCIL module. • Does PID AUTOLMP change states? → **Yes** REPAIR the intermittent open or a short to ground in circuit 188 (W/BK). → **No** The system is operating properly at this time.

PINPOINT TEST F: DTC B1980: BULB OUTAGE CONDITION DETECTED

TEST CONDITIONS	TEST DETAILS/RESULTS/ACTIONS
F1 CHECK THE LOW BEAM HEADLAMPS	
1 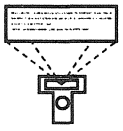 SCIL Module PID LOWBEAM	2 Turn headlamp switch to HEAD with multi-function switch in LOW BEAM position. • Does PID LOWBEAM read OK? → **Yes** LEAVE the headlamp switch in the HEAD position and GO to **F2**. → **No** GO to **F6**.

(Continued)

DIAGNOSIS AND TESTING (Continued)

PINPOINT TEST F: DTC B1980: BULB OUTAGE CONDITION DETECTED (Continued)

TEST CONDITIONS	TEST DETAILS/RESULTS/ACTIONS
F2 CHECK THE TAIL LAMPS	
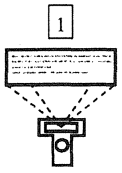 SCIL Module PID TAILLMP	• Does PID TAILLMP read OK? → **Yes** GO to **F3**. → **No** GO to **F13**.
F3 CHECK THE LEFT TURN LAMPS	
     SCIL Module PIDs FTURN__L and RTURN__L	3 Actuate the turn signal switch to the LEFT turn position. • Do PIDs FTURN__L and RTURN__L read OK? → **Yes** GO to **F4**. → **No** GO to Pinpoint Test W.

Official Licensed Product Ford Motor Company

(Continued)

DIAGNOSIS AND TESTING (Continued)

PINPOINT TEST F: DTC B1980: BULB OUTAGE CONDITION DETECTED (Continued)

TEST CONDITIONS	TEST DETAILS/RESULTS/ACTIONS
F4 CHECK THE RIGHT TURN LAMPS	
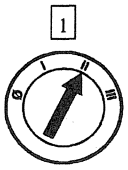 1 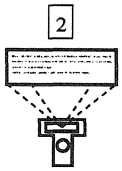 2 SCIL Module PIDs FTURN__L and RTURN__L	3 Actuate the turn signal switch to the RIGHT turn position. • Do PIDs FTURN__L and RTURN__L read OK? → **Yes** GO to **F5**. → **No** GO to Pinpoint Test W.
F5 REPEAT THE SELF-TEST	
 1 SCIL Module Self-Test	2 Turn the headlamps and turn signals OFF. • Is DTC B1980 retrieved? → **Yes** REPLACE the steering column/ignition/lighting (SCIL) module. RETEST the system. → **No** CHECK for moisture, loose bulbs or loose connections at lamp housings and lamp sockets. REPAIR as required. RETEST the system.

Official Licensed Product
Ford Motor Company

(Continued)

DIAGNOSIS AND TESTING (Continued)

PINPOINT TEST F: DTC B1980: BULB OUTAGE CONDITION DETECTED (Continued)

TEST CONDITIONS	TEST DETAILS/RESULTS/ACTIONS
F6 CHECK PID LOWBEAM	
[1] SCIL Module PID LOWBEAM	• Does PID LOWBEAM read L__OPEN or L/R__OPEN? → **Yes** GO to **F8**. → **No** GO to **F9**.
F7 CHECK THE BALLAST GROUND	
[1] 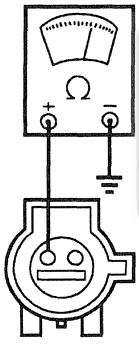 AK1232-A	[1] Connect an ohmmeter between suspect ballast connector, LH ballast C1003 or RH ballast C1004, circuit 57 (BK), and ground. • Is the resistance 5 ohms or less? → **Yes** REPLACE the headlamp bulb; refer to Bulb — Headlamp. RETEST the system. → **No** REPAIR circuit 57 (BK). RETEST the system.

Official Licensed Product
Ford Motor Company

(Continued)

DIAGNOSIS AND TESTING (Continued)

PINPOINT TEST F: DTC B1980: BULB OUTAGE CONDITION DETECTED (Continued)

TEST CONDITIONS	TEST DETAILS/RESULTS/ACTIONS
F8 CHECK THE SUPPLY CIRCUIT — LH LOW BEAM	
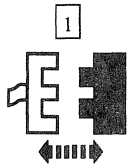 LH Ballast C1003 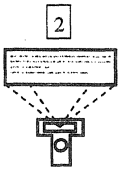 SCIL Module Active Command HEADLAMP CONTROL 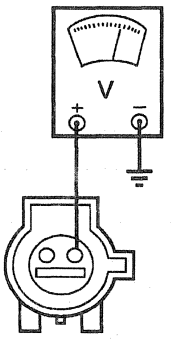 AK1233-A 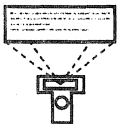 Trigger LEFT LOW ON	3 Connect a voltmeter between LH headlamp ballast C1003, circuit 160 (DB/W), and ground. • Is the voltage reading B+? → **Yes** GO to **F7**. → **No** GO to **F10**.

Official Licensed Product
Ford Motor Company

(Continued)

DIAGNOSIS AND TESTING (Continued)

PINPOINT TEST F: DTC B1980: BULB OUTAGE CONDITION DETECTED (Continued)

TEST CONDITIONS	TEST DETAILS/RESULTS/ACTIONS
F9 CHECK THE SUPPLY CIRCUIT—RH LOW BEAM	
1 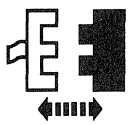 RH Ballast C1004 2 SCIL Module Active Command HEADLAMP CONTROL 3 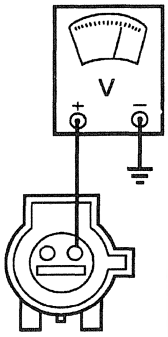 AK1233-A 4 Trigger RIGHT LOW ON	3 Connect a voltmeter between RH headlamp ballast C1004, circuit 161 (DG/O), and ground. • Is the voltage reading B+? → **Yes** GO to **F7**. → **No** GO to **F11**.

Official Licensed Product
Ford Motor Company

(Continued)

DIAGNOSIS AND TESTING (Continued)

PINPOINT TEST F: DTC B1980: BULB OUTAGE CONDITION DETECTED (Continued)

TEST CONDITIONS	TEST DETAILS/RESULTS/ACTIONS
F10 CHECK CIRCUIT 160 (DB/W) FOR AN OPEN	
1 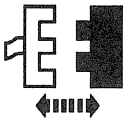 SCIL Module C287	
2 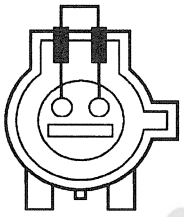 AK1236-A	2 Connect a jumper wire between LH ballast harness C1003, circuit 160 (DB/W), and circuit 57 (BK).
3 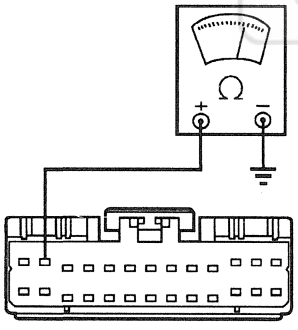 AK1235-A	3 Connect an ohmmeter between SCIL module C287-2, circuit 160 (DB/W), and ground. • Is the resistance less than 5 ohms? → **Yes** GO to **F12**. → **No** REPAIR circuit 160 (DB/W). RETEST the system.

Official Licensed Product
Ford Motor Company

(Continued)

DIAGNOSIS AND TESTING (Continued)

PINPOINT TEST F: DTC B1980: BULB OUTAGE CONDITION DETECTED (Continued)

TEST CONDITIONS	TEST DETAILS/RESULTS/ACTIONS
F11 CHECK CIRCUIT 161 (DG/O) FOR AN OPEN	
1 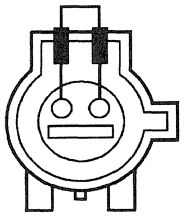 AK1236-A	1 Connect a jumper wire between RH ballast harness C1004, circuit 161 (DG/O), and circuit 57 (BK).
2 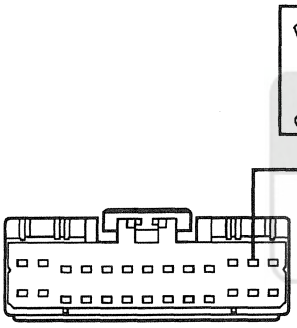 AK1239-A	2 Connect an ohmmeter between SCIL module C287-12, circuit 161 (DG/O), and ground. • Is the resistance less than 5 ohms? → **Yes** GO to **F12**. → **No** REPAIR circuit 161 (DG/O) for an open. RETEST the system.

Official Licensed Product
Ford Motor Company

(Continued)

DIAGNOSIS AND TESTING (Continued)

PINPOINT TEST F: DTC B1980: BULB OUTAGE CONDITION DETECTED (Continued)

TEST CONDITIONS	TEST DETAILS/RESULTS/ACTIONS
F12 RECHECK THE SCIL MODULE OUTPUT	
1 SCIL Module C287	
2 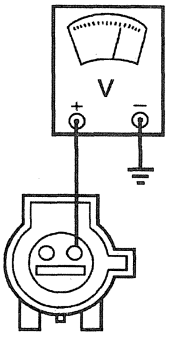 AK1233-A	2 Connect a voltmeter to suspect headlamp ballast C1003, circuit 160 (DB/W)(LH), or C1004, circuit 161 (DG/O)(RH).
3 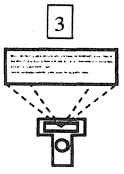 SCIL Module Active Command HEADLAMP CONTROL	4 Trigger suspect headlamp ballast ON, LEFT LOW, (LH headlamp) or RIGHT LOW, (RH headlamp). • Is the voltage reading B+? → **Yes** REPLACE the headlamp bulb; REFER to Bulb — Headlamp. RETEST the system. → **No** REPLACE the SCIL module. RETEST the system.

Official Licensed Product
Ford Motor Company

(Continued)

DIAGNOSIS AND TESTING (Continued)

PINPOINT TEST F: DTC B1980: BULB OUTAGE CONDITION DETECTED (Continued)

TEST CONDITIONS	TEST DETAILS/RESULTS/ACTIONS
F13 CHECK THE SCIL MODULE OUTPUT TO THE TAIL LAMPS	
1 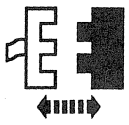 LH and RH Rear Tail Lamp Bulbs 2 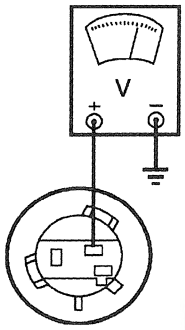 AK1321-A	2 Connect a voltmeter between LH rear tail lamp socket C429, circuit 109 (P/W), and ground. • Is 10 volts or more present? → **Yes** REPLACE the tail lamp bulb(s). RETEST the system. → **No** GO to **F14**.
F14 CHECK TAIL LAMP GROUNDS	
1 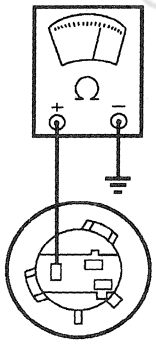 AK1319-A	1 Connect an ohmmeter between LH rear tail lamp socket C429, circuit 57 (BK), and ground; and between RH rear tail lamp socket C430, circuit 57 (BK), and ground. • Is the resistance 5 ohms or less on both circuits? → **Yes** GO to **F15**. → **No** REPAIR circuit 57 (BK). RETEST the system.

Official Licensed Product
Ford Motor Company

(Continued)

DIAGNOSIS AND TESTING (Continued)

PINPOINT TEST F: DTC B1980: BULB OUTAGE CONDITION DETECTED (Continued)

TEST CONDITIONS	TEST DETAILS/RESULTS/ACTIONS
F15 CHECK CIRCUIT 109 (P/W) FOR AN OPEN	
1 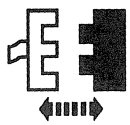 SCIL Module C289	
2 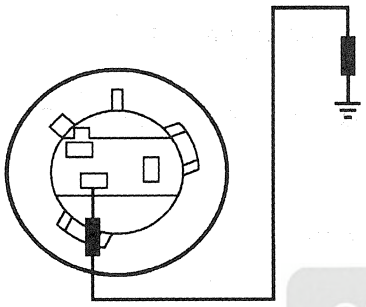 AK1320-A	2 Connect a jumper wire between LH rear tail lamp socket C429, circuit 109 (P/W), and ground.
3 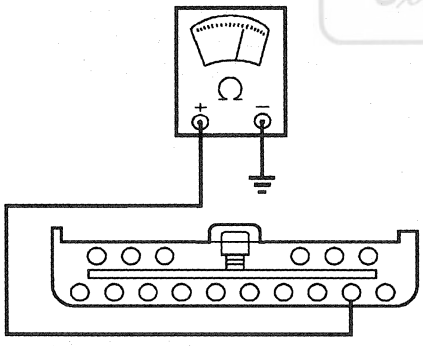 AK1240-A	3 Connect an ohmmeter between SCIL module C289-2, circuit 109 (P/W), and ground. • Is the resistance 5 ohms or less? → **Yes** REPLACE the SCIL module. RETEST the system. → **No** REPAIR circuit 109 (P/W). RETEST the system.

Official Licensed Product
Ford Motor Company

DIAGNOSIS AND TESTING (Continued)

PINPOINT TEST G: DTC B1312: LAMP HEADLAMP INPUT CIRCUIT SHORT TO BATTERY/DTC B1796: HEADLAMP LOW BEAM CIRCUIT SHORT TO BATTERY

TEST CONDITIONS	TEST DETAILS/RESULTS/ACTIONS
G1 CHECK FOR A CONTINUOUS DTC B1312	
1 SCIL Module Self-Test	2 Make sure the headlamp switch is in the OFF position. • Is DTC B1312 retrieved as a continuous DTC only? → **Yes** GO to **G2**. → **No** GO to **G8**.
G2 CHECK FOR DTC B1796	
	1 Check results from the self-test in step G1. • Is DTC B1796 retrieved during the self-test? → **Yes** GO to **G7**. → **No** GO to **G3**.
G3 CHECK THE PARK INPUT	
1 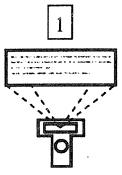 SCIL Module PID PARK__SW	2 Turn the headlamp switch to the HEAD position. • Does PID PARK__SW read ON? → **Yes** GO to **G11**. → **No** GO to **G4**.

(Continued)

Official Licensed Product
Ford Motor Company

DIAGNOSIS AND TESTING (Continued)

PINPOINT TEST G: DTC B1312: LAMP HEADLAMP INPUT CIRCUIT SHORT TO BATTERY/DTC B1796: HEADLAMP LOW BEAM CIRCUIT SHORT TO BATTERY (Continued)

TEST CONDITIONS	TEST DETAILS/RESULTS/ACTIONS
G4 CHECK THE STEERING COLUMN/IGNITION/LIGHTING (SCIL) MODULE INPUT	
1 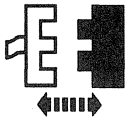 SCIL Module C288 2 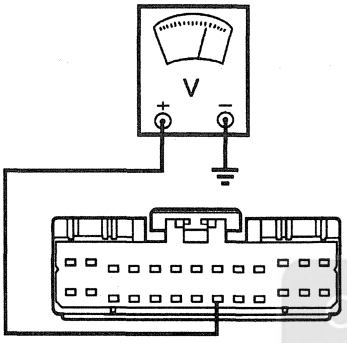 AK1245-A	2 Connect a voltmeter between SCIL module C288-21, circuit 1032 (W/BK), and ground. • Is the voltage reading B+? → **Yes** REPLACE the SCIL module. RETEST the system. → **No** GO to **G5**.
G5 CHECK CIRCUIT 1032 (W/BK) FOR AN OPEN	
1 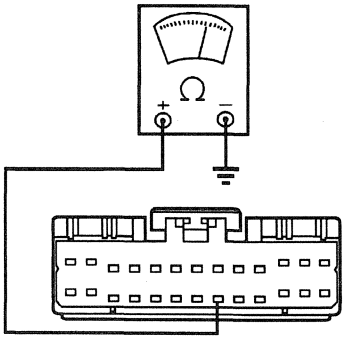 AK1246-A	1 Connect an ohmmeter between SCIL module C288-21, circuit 1032 (W/BK), and ground. • Is the resistance 10 kohms or less? → **Yes** GO to **G6**. → **No** REPAIR circuit 1032 (W/BK). RETEST the system.

Official Licensed Product Ford Motor Company

(Continued)

DIAGNOSIS AND TESTING (Continued)

PINPOINT TEST G: DTC B1312: LAMP HEADLAMP INPUT CIRCUIT SHORT TO BATTERY/DTC B1796: HEADLAMP LOW BEAM CIRCUIT SHORT TO BATTERY (Continued)

TEST CONDITIONS	TEST DETAILS/RESULTS/ACTIONS
G6 CHECK FOR A SHORTED HEADLAMP SWITCH	
1 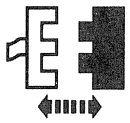 Headlamp Switch C262 2 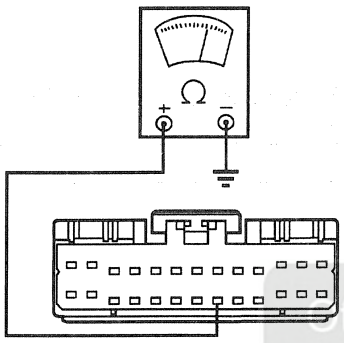 AK1246-A	2 Connect an ohmmeter between SCIL module C288-21, circuit 1032 (W/BK), and ground. • Is the resistance 10 kohms or less? → **Yes** REPAIR circuit 1032 (W/BK). RETEST the system. → **No** REPLACE the headlamp switch. RETEST the system.
G7 CHECK THE HEADLAMP SWITCH	
1 Headlamp Switch C262 2 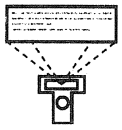 SCIL Module PID LBEAMSW	• Does PID LBEAMSW read ON? → **Yes** GO to **G9**. → **No** REPLACE the headlamp switch. RETEST the system.

Official Licensed Product
Ford Motor Company

(Continued)

DIAGNOSIS AND TESTING (Continued)

PINPOINT TEST G: DTC B1312: LAMP HEADLAMP INPUT CIRCUIT SHORT TO BATTERY/DTC B1796: HEADLAMP LOW BEAM CIRCUIT SHORT TO BATTERY (Continued)

TEST CONDITIONS	TEST DETAILS/RESULTS/ACTIONS
G8 CHECK CIRCUIT 1032 (W/BK)	
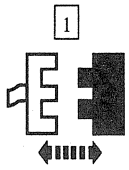 Headlamp Switch C262 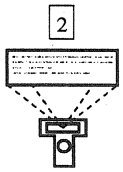 SCIL Module PID PARK__SW	• Does PID PARK__SW read ON? → **Yes** GO to **G10**. → **No** REPLACE the headlamp switch. RETEST the system.
G9 CHECK THE SCIL MODULE FOR SHORTED CIRCUIT 1033 (R/Y)	
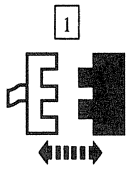 SCIL Module C288 SCIL Module PID LBEAMSW	• Does PID LBEAMSW read ON? → **Yes** REPLACE the SCIL module. RETEST the system. → **No** REPAIR circuit 1033 (R/Y). RETEST the system.
G10 CHECK THE SCIL MODULE FOR SHORTED CIRCUIT 1032(W/BK)	
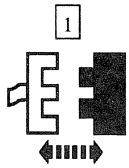 SCIL Module C288 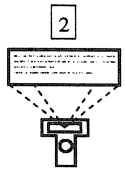 SCIL Module PID PARK__SW	• Does PID PARK__SW read ON? → **Yes** REPLACE the SCIL module. RETEST the system. → **No** REPAIR circuit 1032 (W/BK). RETEST the system.

Official Licensed Product Ford Motor Company

(Continued)

DIAGNOSIS AND TESTING (Continued)

PINPOINT TEST G: DTC B1312: LAMP HEADLAMP INPUT CIRCUIT SHORT TO BATTERY/DTC B1796: HEADLAMP LOW BEAM CIRCUIT SHORT TO BATTERY (Continued)

TEST CONDITIONS	TEST DETAILS/RESULTS/ACTIONS
G11 CHECK FOR AN INTERMITTENT SHORT TO VOLTAGE	
1 SCIL Module Active Command PIDLATCH 2 Select PID PARK__SW	3 Tap on the connectors and flex the harness between the headlamp switch and the SCIL module. • Does PID PARK__SW change states? → **Yes** REPAIR the harness or connector flexed when PID latched for an intermittent short to voltage. RETEST the system. → **No** System operating properly at this time.

PINPOINT TEST H: NO COMMUNICATION WITH THE STEERING COLUMN/IGNITION/LIGHTING MODULE

TEST CONDITIONS	TEST DETAILS/RESULTS/ACTIONS
H1 CHECK CIRCUIT 875 (BK/LB) FOR AN OPEN	
1 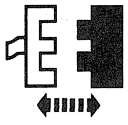 SCIL Module C288 2 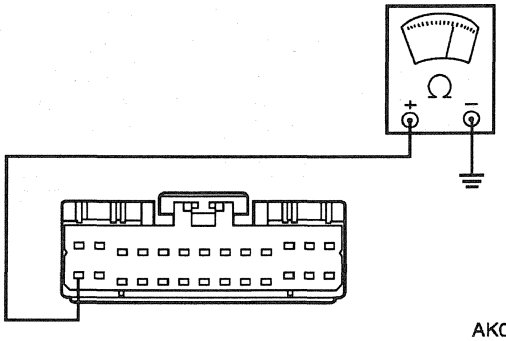 AK0313-B	2 Connect an ohmmeter between the steering column/ ignition/lighting (SCIL) module C288-14, circuit 875 (BK/LB), and ground. • Is the resistance 5 ohms or less? → **Yes** GO to **H2**. → **No** REPAIR circuit 875 (BK/LB). RETEST the system.

(Continued)

DIAGNOSIS AND TESTING (Continued)

PINPOINT TEST H: NO COMMUNICATION WITH THE STEERING COLUMN/IGNITION/LIGHTING MODULE (Continued)

TEST CONDITIONS	TEST DETAILS/RESULTS/ACTIONS
H2 CHECK CIRCUIT 57 (BK) FOR AN OPEN	
1 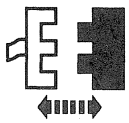 SCIL Module C287 2 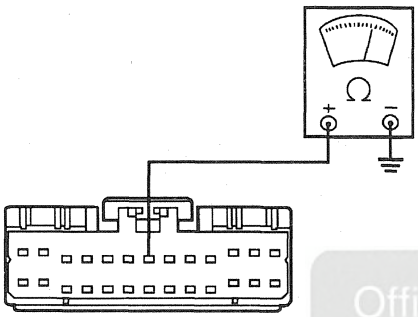 AK0314-B	2 Connect an ohmmeter between the SCIL module C287-7, circuit 57 (BK), and ground. • Is the resistance 5 ohms or less? → **Yes** GO to **H3**. → **No** REPAIR circuit 57 (BK). RETEST the system.
H3 CHECK FOR B+ SUPPLY ON THE SCIL MODULE CONNECTOR C287	
1 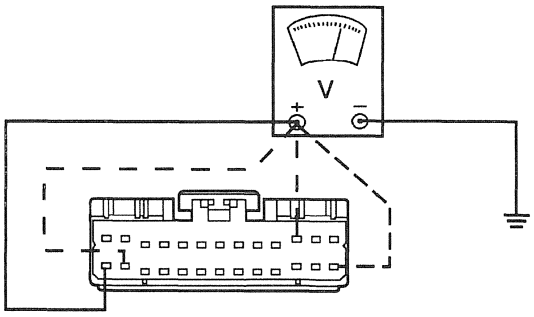 AK1260-A	1 Connect a voltmeter between each of the following SCIL module C287 pins and ground as follows: • C287-14, circuit 906 (R/O). • C287-26, circuit 19 (LB/R). • C287-15, circuit 1055 (W/LG). • C287-11, circuit 1056 (DB/LG). • Is the voltage reading on any circuit B+? → **Yes** REFER to Section 418-00. → **No** For each suspect circuit, REFER to the Electrical and Vacuum Troubleshooting Manual, Cell 58, Lighting Control Module and Cell 11, Circuit Protection/Fuse Panel to identify the subsystem in need of repair. REPAIR as required. GO to **H4**.

Official Licensed Product Ford Motor Company

(Continued)

DIAGNOSIS AND TESTING (Continued)

PINPOINT TEST H: NO COMMUNICATION WITH THE STEERING COLUMN/IGNITION/LIGHTING MODULE (Continued)

TEST CONDITIONS	TEST DETAILS/RESULTS/ACTIONS
H4 CHECK FOR B+ SUPPLY ON THE SCIL MODULE CONNECTOR C289	
1 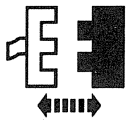 SCIL Module C289 2 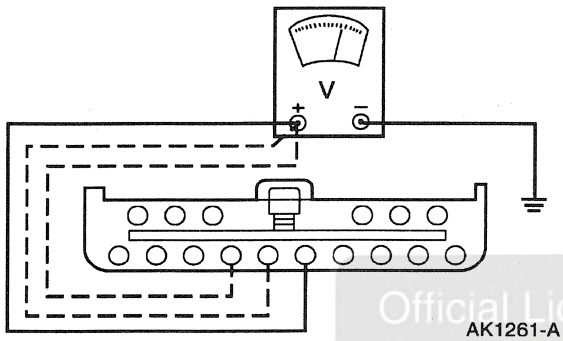 AK1261-A	2 Connect a voltmeter between each SCIL module C289 pins, and ground as follows: • C289-5, circuit 1058 (BR/W). • C289-6, circuit 1057 (O/BK). • C289-7, circuit 908 (PK/LG). • Is the voltage reading on any circuit B+? → **Yes** REFER to Section 418-00. → **No** For each suspect circuit, REFER to the Electrical and Vacuum Troubleshooting Manual, Cell 58, Lighting Control Module and Cell 11, Circuit Protection/Fuse Panel to identify the subsystem in need of repair. REPAIR as required. RESTORE the vehicle. REPEAT the SCIL module self test.

Official Licensed Product
Ford Motor Company

DIAGNOSIS AND TESTING (Continued)

PINPOINT TEST J: ONE LOW BEAM HEADLAMP IS INOPERATIVE

NOTE: Due to varying wattage ratings and resulting current draw, certain aftermarket headlamp bulbs may cause the steering column/ignition/lighting (SCIL) module to shut down the short circuit protection resulting in the low beams becoming inoperative. Verify that the bulbs meet Ford specifications.

TEST CONDITIONS	TEST DETAILS/RESULTS/ACTIONS
J1 CHECK FOR DTCS	
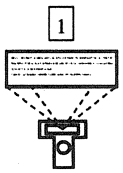 SCIL Module Self-Test	• Is DTC B1980 or B1689 retrieved? → **Yes** REFER to the SCIL Diagnostic Trouble Code (DTC) Index to address the DTC(s). → **No** GO to **J2**.
J2 CHECK THE LH LOW BEAM HEADLAMP FOR FAILURE	
	1 Turn the headlamp switch to the HEAD position. 2 Wait at least 90 seconds. 3 Inspect the LH low beam headlamp. • Is the LH low beam headlamp completely inoperative? → **Yes** GO to **J6**. → **No** GO to **J3**.
J3 CHECK THE LH LOW BEAM HEADLAMP FOR PARTIAL OPERATION	
	1 Inspect the output of the LH low beam headlamp. • Is the LH low beam headlamp output dim or discolored? → **Yes** REPLACE the LH low beam headlamp bulb. RETEST the system. → **No** GO to **J4**.

Official Licensed Product
Ford Motor Company

(Continued)

DIAGNOSIS AND TESTING (Continued)

PINPOINT TEST J: ONE LOW BEAM HEADLAMP IS INOPERATIVE (Continued)

TEST CONDITIONS	TEST DETAILS/RESULTS/ACTIONS
J4 CHECK THE RH LOW BEAM HEADLAMP FOR FAILURE	
	1 Inspect the RH low beam headlamp. • Is the RH low beam headlamp completely inoperative? → **Yes** GO to **J9**. → **No** GO to **J5**.
J5 CHECK THE RH LOW BEAM HEADLAMP FOR PARTIAL OPERATION	
	1 Inspect the output of the RH low beam headlamp. • Is the RH low beam headlamp output dim or discolored? → **Yes** REPLACE the RH low beam headlamp bulb. RETEST the system. → **No** CHECK all connectors between the SCIL module and the low beam headlamp bulb for damage, partial connection or contamination. CHECK the operation of the autolamp headlamp function. CHECK all of the circuits involved for partial open circuits or partial shorts-to-ground. REPAIR as necessary. RETEST the system.

Official Licensed Product
Ford Motor Company

(Continued)

DIAGNOSIS AND TESTING (Continued)

PINPOINT TEST J: ONE LOW BEAM HEADLAMP IS INOPERATIVE (Continued)

TEST CONDITIONS	TEST DETAILS/RESULTS/ACTIONS
J6 CHECK THE LH LOW BEAM HEADLAMP BALLAST FOR VOLTAGE	
1 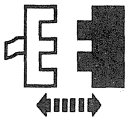 LH Low Beam Headlamp Ballast C1003 2 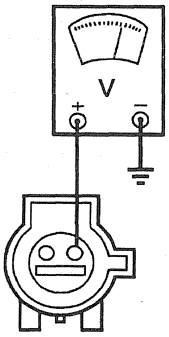 AK1233-A	2 Wait four seconds. Connect a voltmeter between LH low beam headlamp ballast connector C1003, circuit 160 (DB/W), and ground. • Is the voltage reading B+? → **Yes** GO to **J14**. → **No** GO to **J7**.
J7 CHECK CIRCUIT 1055 (W/LG) FOR AN OPEN	
1 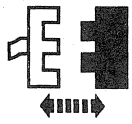 SCIL Module C287 2 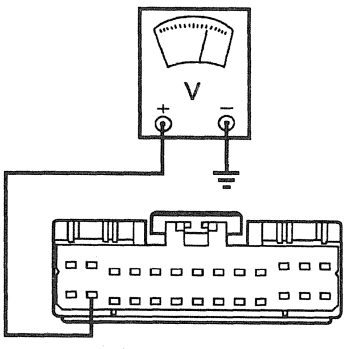 AK1343-A	2 Connect a voltmeter between SCIL module C287-15, circuit 1055 (W/LG), and ground. • Is the voltage reading B+? → **Yes** GO to **J8**. → **No** REPAIR circuit 1055 (W/LG).

Official Licensed Product
Ford Motor Company

(Continued)

DIAGNOSIS AND TESTING (Continued)

PINPOINT TEST J: ONE LOW BEAM HEADLAMP IS INOPERATIVE (Continued)

TEST CONDITIONS	TEST DETAILS/RESULTS/ACTIONS
J8 CHECK CIRCUIT 160 (DB/W) FOR A SHORT TO GROUND	
1 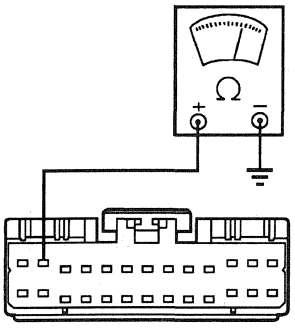 AK1235-A	1 Connect an ohmmeter between SCIL module C287-2, circuit 160 (DB/W), and ground. • Is the resistance 10 kohms or less? → **Yes** REPAIR circuit 160 (DB/W). RETEST the system. → **No** REPLACE the SCIL module. RETEST the system.
J9 CHECK THE RH LOW BEAM HEADLAMP BALLAST FOR VOLTAGE	
1 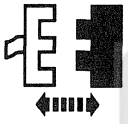 RH Low Beam Headlamp Ballast C1004 2 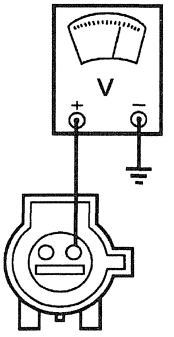 AK1233-A	2 Wait four seconds. Connect a voltmeter between RH low beam headlamp ballast connector C1004, circuit 161 (DG/O), and ground. • Is the voltage reading B+? → **Yes** GO to **J15**. → **No** GO to **J10**.

Official Licensed Product
Ford Motor Company

(Continued)

DIAGNOSIS AND TESTING (Continued)

PINPOINT TEST J: ONE LOW BEAM HEADLAMP IS INOPERATIVE (Continued)

TEST CONDITIONS	TEST DETAILS/RESULTS/ACTIONS
J10 CHECK RH LOW BEAM HEADLAMP SUPPLY	
1 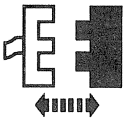 SCIL Module C287 2 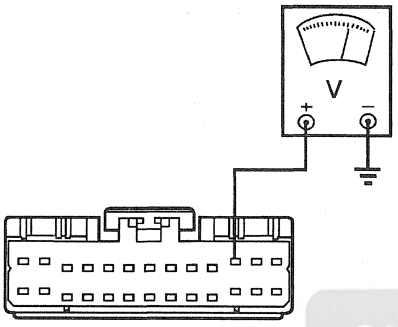 AK1342-A	2 Connect a voltmeter between SCIL module C287-11, circuit 1056 (DB/LG), and ground. • Is the voltage reading B+? → **Yes** GO to **J13**. → **No** GO to **J11**.
J11 CHECK FUSE JUNCTION PANEL FUSE 25 (10A)	
1 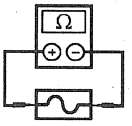 Fuse Junction Panel Fuse 25 (10A)	• Is the fuse OK? → **Yes** REPAIR circuit 1056 (DB/LG). RETEST the system. → **No** GO to **J12**.

Official Licensed Product
Ford Motor Company

(Continued)

DIAGNOSIS AND TESTING (Continued)

PINPOINT TEST J: ONE LOW BEAM HEADLAMP IS INOPERATIVE (Continued)

TEST CONDITIONS	TEST DETAILS/RESULTS/ACTIONS
J12 CHECK CIRCUIT 1056 (DB/LG)	
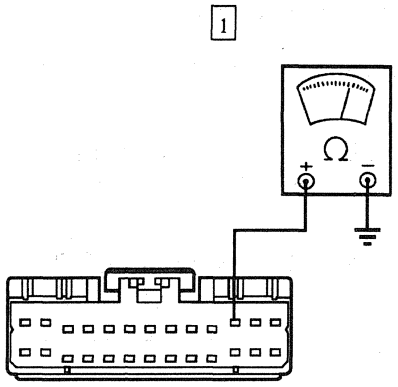 AK1237-A	1 Connect an ohmmeter between the SCIL module C287-11, circuit 1056 (DB/LG), and ground. • Is the resistance 10 kohms or less? → **Yes** REPAIR circuit 1056 (DB/LG). RETEST the system. → **No** GO to **J13**.
J13 CHECK CIRCUIT 161 (DG/O) FOR A SHORT TO GROUND	
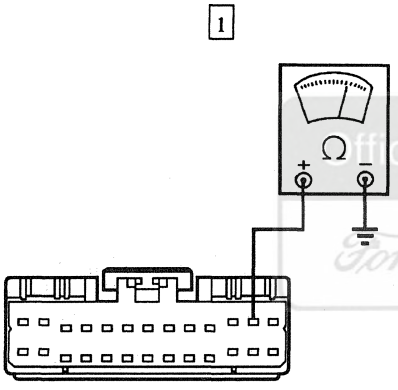 AK1239-A	1 Connect an ohmmeter between the SCIL module C287-12, circuit 161 (DG/O), and ground. • Is the resistance 10 kohms or less? → **Yes** REPAIR circuit 161 (DG/O). RETEST the system. → **No** REPLACE the SCIL module. RETEST the system.
J14 CROSS THE LH BEAM TO THE RH LOW BEAM BALLAST	
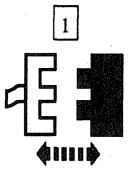 RH Low Beam Headlamp C1012	2 Turn the headlamp switch to OFF. 3 Connect the LH low beam headlamp to the RH low beam ballast. Use Diagnostic Cable wire harness F7LZ-15A200-CA.

(Continued)

Official Licensed Product Ford Motor Company

DIAGNOSIS AND TESTING (Continued)

PINPOINT TEST J: ONE LOW BEAM HEADLAMP IS INOPERATIVE (Continued)

TEST CONDITIONS	TEST DETAILS/RESULTS/ACTIONS
J14 CROSS THE LH BEAM TO THE RH LOW BEAM BALLAST (Continued)	
	4 Turn the headlamp switch to HEAD. • Does the LH low beam headlamp illuminate? → **Yes** REPLACE the LH low beam ballast. RETEST the system. → **No** REPLACE the LH low beam headlamp bulb; REFER to Bulb — Headlamp. RETEST the system.
J15 CROSS THE RH LOW BEAM TO THE LH LOW BEAM BALLAST	
1 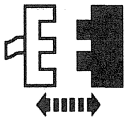 LH Low Beam Headlamp C1011	2 Turn the headlamp switch to OFF. 3 Connect the RH low beam headlamp to the LH low beam ballast. Use Diagnostic Cable wire harness F7LZ-15A200-CA. 4 Turn the headlamp switch to HEAD. • Does the RH low beam headlamp illuminate? → **Yes** REPLACE the RH low beam ballast. RETEST the system. → **No** REPLACE the RH low beam headlamp bulb; REFER to Bulb — Headlamp. RETEST the system.

Official Licensed Product
Ford Motor Company

DIAGNOSIS AND TESTING (Continued)

PINPOINT TEST K: THE LOW BEAMS ARE INOPERATIVE

TEST CONDITIONS	TEST DETAILS/RESULTS/ACTIONS
K1 CHECK CIRCUIT 1033 (R/Y) FOR A SHORT TO GROUND	
NOTE: Due to varying wattage ratings and resulting current draw, certain aftermarket headlamp bulbs may cause the steering column/ignition/lighting (SCIL) module to shut down the short circuit protection resulting in the low beams becoming inoperative. Verify that the headlamp bulbs meet Ford specifications.	
1 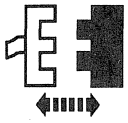 Headlamp Switch C262 2 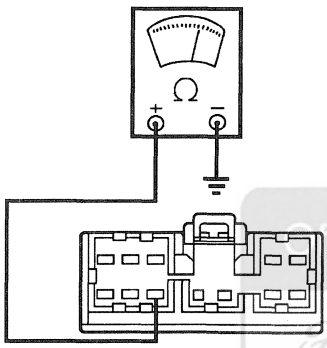 AK1247-A	2 Connect an ohmmeter between headlamp switch C262-8, circuit 1033 (R/Y), and ground. • Is the resistance 2000 ohms or less? → **Yes** REPAIR circuit 1033 (R/Y). RETEST the system. → **No** GO to **K2**.
K2 CHECK THE HEADLAMP SWITCH	
1 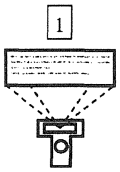 SCIL Module PID LBEAMSW 2 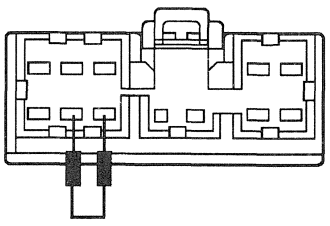 AK1248-A	2 Connect a jumper wire between headlamp switch C262-7, circuit 1055 (W/LG), and C262-8, circuit 1033 (R/Y). • Does PID LBEAMSW read ON? → **Yes** REPLACE the headlamp switch. RETEST the system. → **No** GO to **K3**.

Official Licensed Product Ford Motor Company

(Continued)

DIAGNOSIS AND TESTING (Continued)

PINPOINT TEST K: THE LOW BEAMS ARE INOPERATIVE (Continued)

TEST CONDITIONS	TEST DETAILS/RESULTS/ACTIONS
K3 CHECK CIRCUIT 1033 (R/Y) FOR AN OPEN	
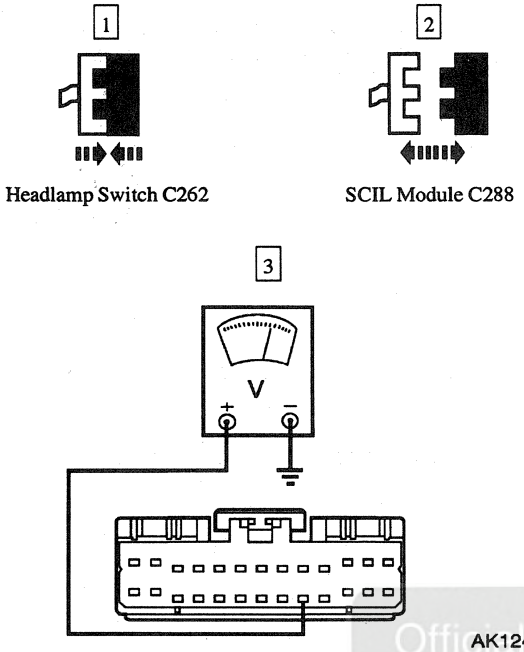	3 Connect a voltmeter between steering column/ignition/lighting SCIL module C288-22, circuit 1033 (R/Y), and ground. 4 Turn the headlamp switch to the HEAD position. • Is the voltage reading B+? → **Yes** REPLACE the SCIL module. RETEST the system. → **No** REPAIR circuit 1033 (R/Y). RETEST the system.

Official Licensed Product
Ford Motor Company

DIAGNOSIS AND TESTING (Continued)

PINPOINT TEST L: THE HIGH BEAMS ARE INOPERATIVE

TEST CONDITIONS	TEST DETAILS/RESULTS/ACTIONS
L1 COMMAND THE HIGH BEAM HEADLAMPS ON	
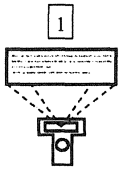 1 SCIL Module Active Command HEADLAMP CONTROL 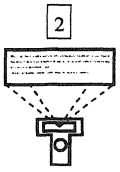 2 Trigger HIGH BEAM ON	• Do the high beam headlamps turn ON? → **Yes** GO to **L2**. → **No** GO to **L9**.
L2 CHECK PID HBEAMSW	
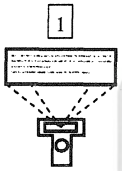 1 SCIL Module PID HBEAMSW	2 Turn the headlamp switch to the HEAD position. 3 Activate the multi-function switch to the HIGH BEAM position. • Does PID HBEAMSW read ON? → **Yes** REPLACE the steering column/ignition lighting (SCIL) module. RETEST the system. → **No** GO to **L3**.

(Continued)

Official Licensed Product
Ford Motor Company

DIAGNOSIS AND TESTING (Continued)

PINPOINT TEST L: THE HIGH BEAMS ARE INOPERATIVE (Continued)

TEST CONDITIONS	TEST DETAILS/RESULTS/ACTIONS
L3 CHECK PID FLASH	
1 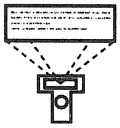 SCIL Module PID FLASH	2 Activate the Flash-to-Pass Switch. • Does PID FLASH read ON? → **Yes** REPLACE the multi-function switch. REFER to Section 211-05. RETEST the system. → **No** GO to **L4**.
L4 CHECK THE SWITCH FEED	
1 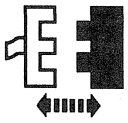 Multi-Function Switch C215 2 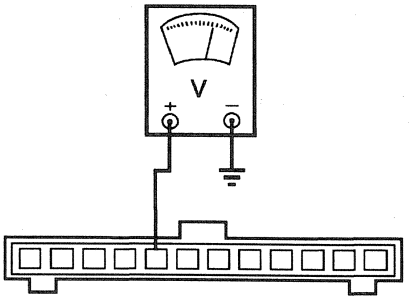 AK1250-A	2 Connect a voltmeter between multi-function switch C215-5, circuit 1041 (BR/O), and ground. • Is the voltage between 4.5 and 5.5 volts? → **Yes** GO to **L5**. → **No** GO to **L7**.

Official Licensed Product
Ford Motor Company

(Continued)

DIAGNOSIS AND TESTING (Continued)

PINPOINT TEST L: THE HIGH BEAMS ARE INOPERATIVE (Continued)

TEST CONDITIONS	TEST DETAILS/RESULTS/ACTIONS
L5 CHECK CIRCUIT 1042 (R/O)	
1 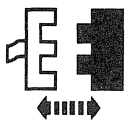 SCIL Module C286 2 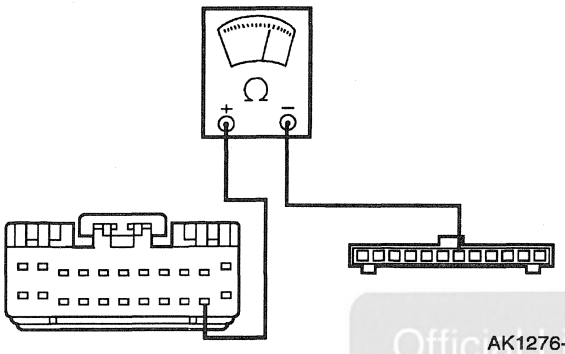 AK1276-A	2 Connect an ohmmeter between SCIL module C286-21 and multi-function switch C215-7, circuit 1042 (R/O). • Is the resistance 5 ohms or less? → **Yes** GO to **L6**. → **No** REPAIR circuit 1042 (R/O). RETEST the system.
L6 CHECK CIRCUIT 1042 (R/O) FOR A SHORT TO GROUND	
1 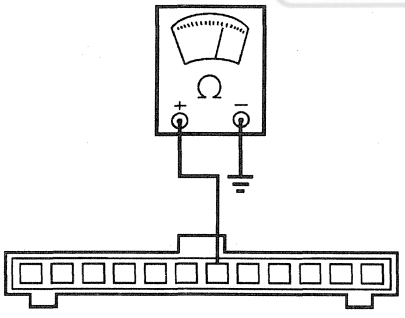 AK1277-A	1 Connect an ohmmeter between multi-function switch C215-7, circuit 1042 (R/O), and ground. • Is the resistance 10 kohms or less? → **Yes** REPAIR circuit 1042 (R/O). RETEST the system. → **No** REPLACE the multi-function switch. REFER to Section 211-05. RETEST the system.

Officially Licensed Product
Ford Motor Company

(Continued)

DIAGNOSIS AND TESTING (Continued)

PINPOINT TEST L: THE HIGH BEAMS ARE INOPERATIVE (Continued)

TEST CONDITIONS	TEST DETAILS/RESULTS/ACTIONS
L7 CHECK CIRCUIT 1041 (BR/O) FOR AN OPEN	
1 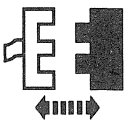 SCIL Module C286 2 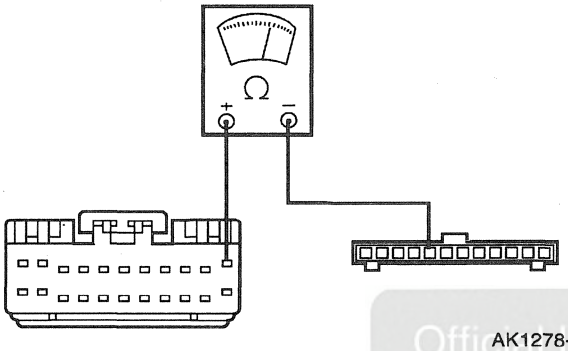 AK1278-A	2 Connect an ohmmeter between SCIL module C286-11 and multi-function switch C215-5, circuit 1041 (BR/O). • Is the resistance 5 ohms or less? → **Yes** GO to **L8**. → **No** REPAIR circuit 1041 (BR/O). RETEST the system.
L8 CHECK CIRCUIT 1041 (BR/O) FOR A SHORT TO GROUND	
1 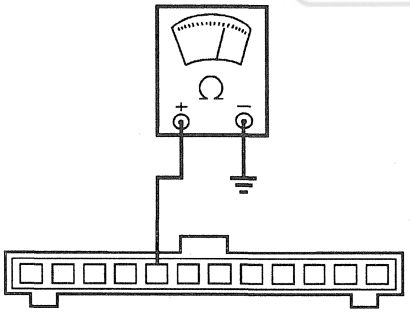 AK1279-A	1 Connect an ohmmeter between multi-function switch C215-5, circuit 1041 (BR/O), and ground. • Is the resistance 10 kohms or less? → **Yes** REPAIR circuit 1041 (BR/O). RETEST the system. → **No** REPLACE the SCIL module. RETEST the system.

Official Licensed Product
Ford Motor Company

(Continued)

DIAGNOSIS AND TESTING (Continued)

PINPOINT TEST L: THE HIGH BEAMS ARE INOPERATIVE (Continued)

TEST CONDITIONS	TEST DETAILS/RESULTS/ACTIONS
L9 CHECK THE RELAY SUPPLY	
1 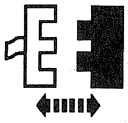 High Beam Relay 2 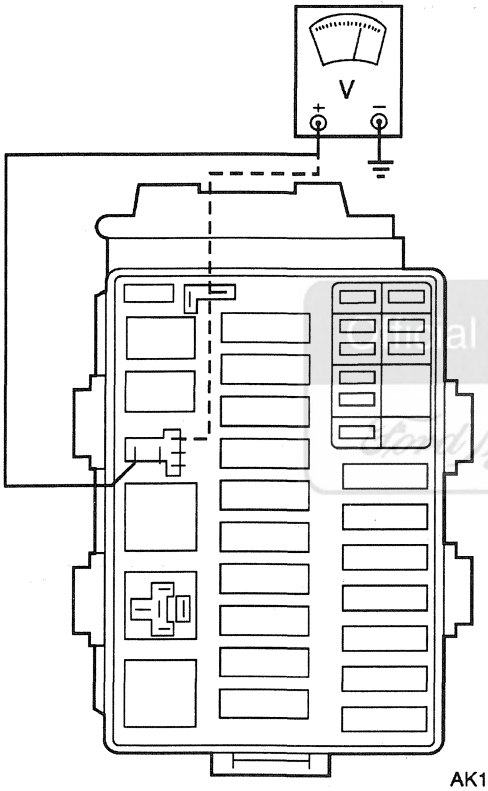 AK1280-A	2 Connect a voltmeter between high beam relay C1019-3, circuit 12 (LG/BK), and ground; then pin C1019-2, circuit 12 (LG/BK) and ground. • Is the voltage reading B+? → **Yes** GO to **L10**. → **No** GO to **L13**.

(Continued)

Ford Motor Company Licensed Product

DIAGNOSIS AND TESTING (Continued)

PINPOINT TEST L: THE HIGH BEAMS ARE INOPERATIVE (Continued)

TEST CONDITIONS	TEST DETAILS/RESULTS/ACTIONS
L10 CHECK CIRCUIT 218 (W/P) FOR VOLTAGE	
1 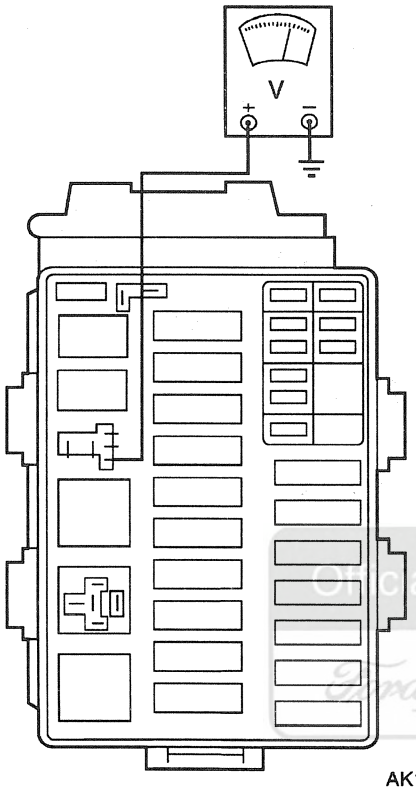 AK1316-A	1 Connect a voltmeter between high beam relay C1019-1, circuit 218 (W/P), and ground. • Is the voltage reading B+? → **Yes** REPAIR circuit 218 (W/P). RETEST the system. → **No** GO to **L11**.

Official Licensed Product
Ford Motor Company

(Continued)

DIAGNOSIS AND TESTING (Continued)

PINPOINT TEST L: THE HIGH BEAMS ARE INOPERATIVE (Continued)

TEST CONDITIONS	TEST DETAILS/RESULTS/ACTIONS
L11 CHECK THE SCIL MODULE OUTPUT	
1 SCIL Module Active Command HEADLAMP CONTROL 2 Trigger HIGH BEAM ON 3 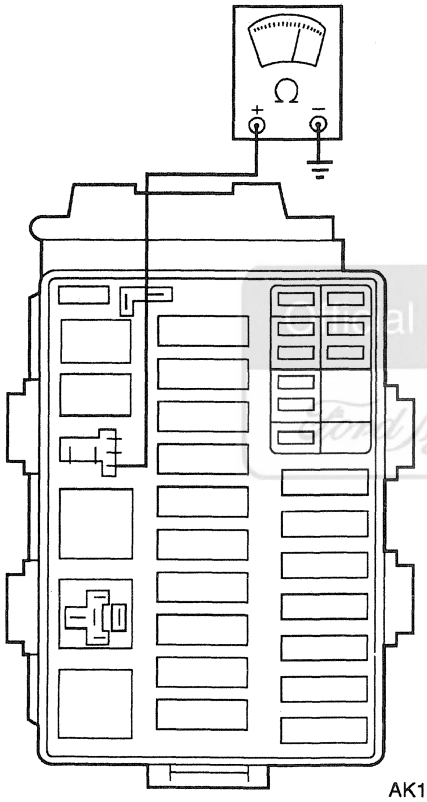 AK1281-A	3 Connect an ohmmeter between high beam relay C1019-1, circuit 218 (W/P), and ground. • Is the resistance 5 ohms or less? → **Yes** Trigger HIGH BEAM OFF and GO to **L12.** → **No** GO to **L15.**

Ford Motor Company

(Continued)

DIAGNOSIS AND TESTING (Continued)

PINPOINT TEST L: THE HIGH BEAMS ARE INOPERATIVE (Continued)

TEST CONDITIONS	TEST DETAILS/RESULTS/ACTIONS
L12 CHECK THE RELAY OUTPUT CIRCUIT	
[1] 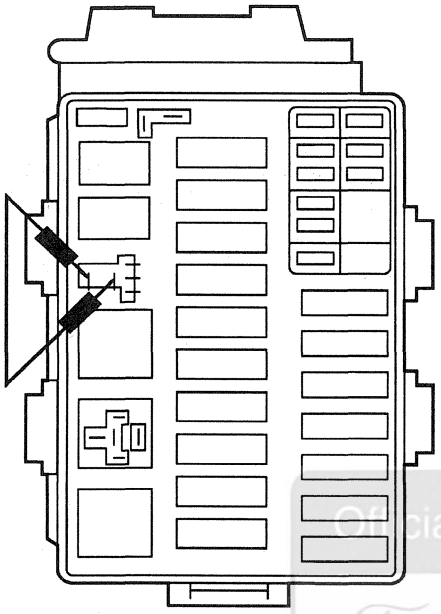 AK1282-A	[1] Connect a jumper wire between high beam relay C1019-3, circuit 12 (LG/BK), and high beam relay C1019-5, circuit 932 (GY/W). • Do the high beam headlamps turn ON? → **Yes** REPLACE the high beam relay. RETEST the system. → **No** REPAIR circuit 932 (GY/W). RETEST the system.
L13 CHECK POWER DISTRIBUTION BOX FUSE 2 (15A)	
[1] 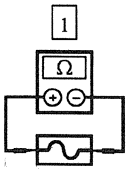 Power Distribution Box Fuse 2 (15A)	• Is the fuse OK? → **Yes** REPAIR circuit 12 (LG/BK). RETEST the system. → **No** GO to **L14**.

(Continued)

Official Licensed Product
Ford Motor Company

DIAGNOSIS AND TESTING (Continued)

PINPOINT TEST L: THE HIGH BEAMS ARE INOPERATIVE (Continued)

TEST CONDITIONS	TEST DETAILS/RESULTS/ACTIONS
L14 CHECK CIRCUIT 12 (LG/BK)	
1 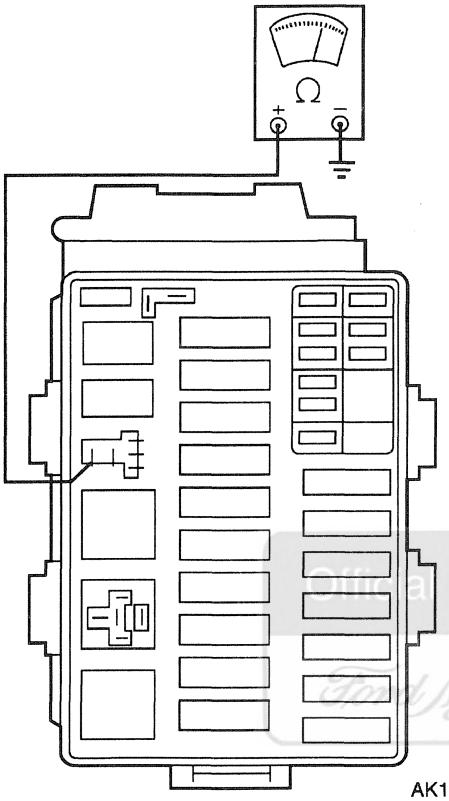 AK1283-A	1 Connect an ohmmeter between high beam relay C1019-3, circuit 12 (LG/BK), and ground. • Is the resistance 10 kohms or less? → **Yes** REPAIR circuit 12 (LG/BK). RETEST the system. → **No** REPAIR circuit 932 (GY/W). RETEST the system.

Official Licensed Product
Ford Motor Company

(Continued)

DIAGNOSIS AND TESTING (Continued)

PINPOINT TEST L: THE HIGH BEAMS ARE INOPERATIVE (Continued)

TEST CONDITIONS	TEST DETAILS/RESULTS/ACTIONS
L15 CHECK CIRCUIT 218 (W/P)	
1 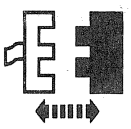 SCIL Module C288 2 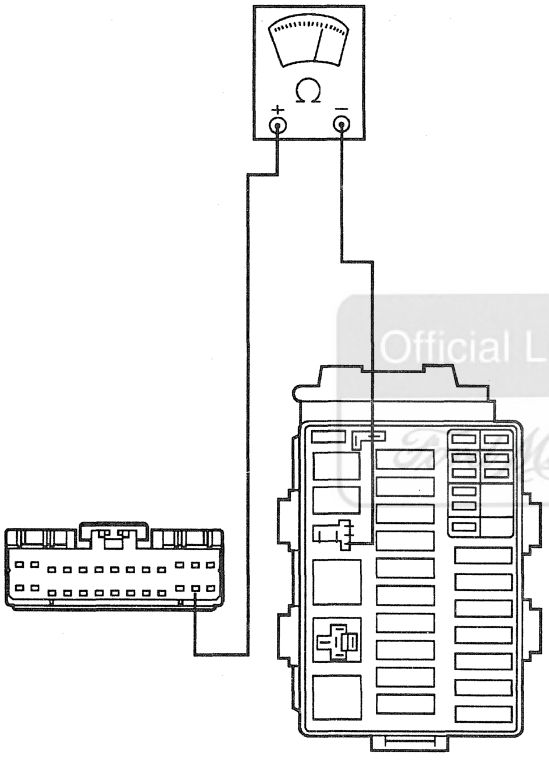 AK1284-A	2 Connect an ohmmeter between SCIL module C288-25 and high beam relay C1019-1, circuit 218 (W/P). • Is the resistance 5 ohms or less? → **Yes** REPLACE the SCIL module. RETEST the system. → **No** REPAIR circuit 218 (W/P). RETEST the system.

Official Licensed Product
Ford Motor Company

DIAGNOSIS AND TESTING (Continued)

PINPOINT TEST M: THE HEADLAMPS ARE ON CONTINUOUSLY — LOW BEAM

TEST CONDITIONS	TEST DETAILS/RESULTS/ACTIONS
M1 CHECK THE LH FRONT HEADLAMP	
	1 Make sure that the headlamps, autolamps and windshield wipers are turned OFF. • Is the LH low beam headlamp always on? → **Yes** GO to **M2**. → **No** GO to **M3**.
M2 CHECK CIRCUIT 160 (DB/W) FOR A SHORT TO B+	
1 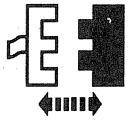 SCIL Module C287	2 Check the LH low beam headlamp. • Is the LH low beam headlamp on? → **Yes** REPAIR circuit 160 (DB/W). RETEST the system. → **No** REPLACE the steering column/ignition/lighting (SCIL) module. RETEST the system.
M3 CHECK CIRCUIT 161 (DG/O) FOR A SHORT TO B+	
1 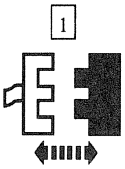 SCIL Module C287	2 Check the RH low beam headlamp. • Is the RH low beam headlamp on? → **Yes** REPAIR circuit 161 (DG/O). RETEST the system. → **No** REPLACE the SCIL module. RETEST the system.

Official Licensed Reprint
Ford Motor Company

DIAGNOSIS AND TESTING (Continued)

PINPOINT TEST N: THE HEADLAMPS ARE ON CONTINUOUSLY — HIGH BEAMS

TEST CONDITIONS	TEST DETAILS/RESULTS/ACTIONS
N1 CHECK THE HIGH BEAMS WITH THE RELAY REMOVED	
[1] 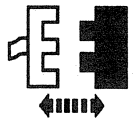 High Beam Relay	• Are the high beams OFF? → **Yes** GO to **N2.** → **No** REPAIR circuit 932 (GY/W). RETEST the system.
N2 CHECK CIRCUIT 218 (W/P)	
[1] 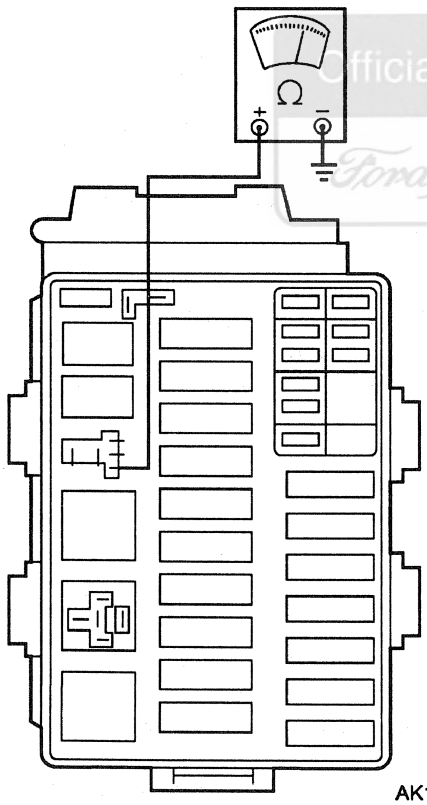 AK1281-A	[1] Connect an ohmmeter between high beam relay C1019-1, circuit 218 (W/P), and ground. • Is the resistance 10 kohms or less? → **Yes** GO to **N3.** → **No** REPLACE the high beam relay. RETEST the system.

Official Licensed Product Ford Motor Company

(Continued)

DIAGNOSIS AND TESTING (Continued)

PINPOINT TEST N: THE HEADLAMPS ARE ON CONTINUOUSLY — HIGH BEAMS (Continued)

TEST CONDITIONS	TEST DETAILS/RESULTS/ACTIONS
N3 CHECK THE STEERING COLUMN/IGNITION/LIGHTING (SCIL) MODULE	
1 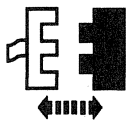 SCIL Module C288 2 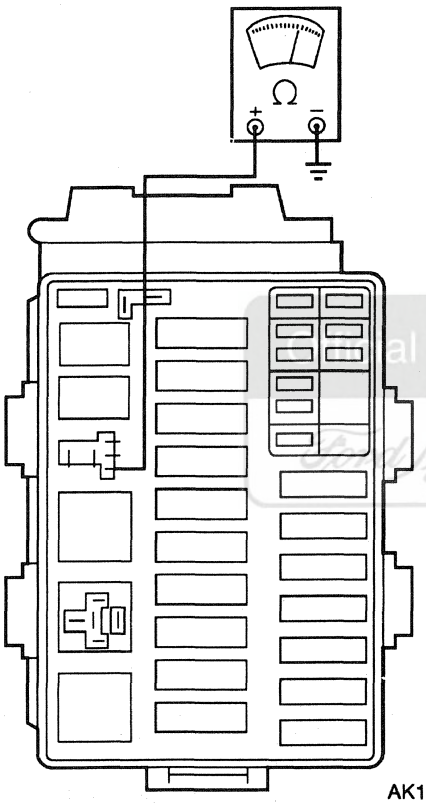 AK1281-A	2 Connect an ohmmeter between high beam relay C1019-1, circuit 218 (W/P), and ground. • Is the resistance 10 kohms or less? → **Yes** REPAIR circuit 218 (W/P). RETEST the system. → **No** REPLACE the SCIL module. RETEST the system.

Digital Licensed Product
Ford Motor Company

DIAGNOSIS AND TESTING (Continued)

PINPOINT TEST P: THE FLASH-TO-PASS FEATURE IS INOPERATIVE

TEST CONDITIONS	TEST DETAILS/RESULTS/ACTIONS
P1 CHECK CIRCUIT 1041 (BR/O) FOR VOLTAGE	
1 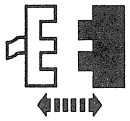 Multi-Function Switch C215 2 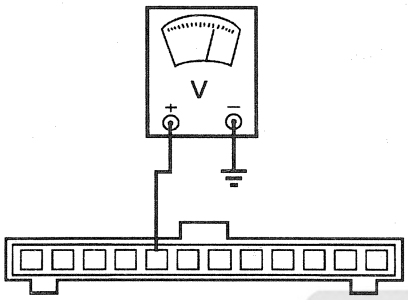 AK1250-A	2 Connect a voltmeter between multi-function switch C215-5, circuit 1041 (BR/O), and ground. • Is the voltage between 4.5 and 5.5 volts? → **Yes** GO to **P4**. → **No** GO to **P2**.
P2 CHECK CIRCUIT 1041 (BR/O) FOR A SHORT TO GROUND	
1 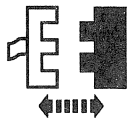 SCIL Module C286 2 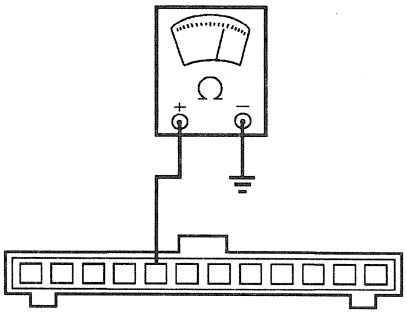 AK1279-A	2 Connect an ohmmeter between multi-function switch C215-5, circuit 1041 (BR/O), and ground. • Is the resistance 10 kohms or less? → **Yes** REPAIR circuit 1041 (BR/O). RETEST the system. → **No** GO to **P3**.

Official Licensed Product
Ford Motor Company

(Continued)

DIAGNOSIS AND TESTING (Continued)

PINPOINT TEST P: THE FLASH-TO-PASS FEATURE IS INOPERATIVE (Continued)

TEST CONDITIONS	TEST DETAILS/RESULTS/ACTIONS
P3 CHECK CIRCUIT 1041 (BR/O) FOR AN OPEN	
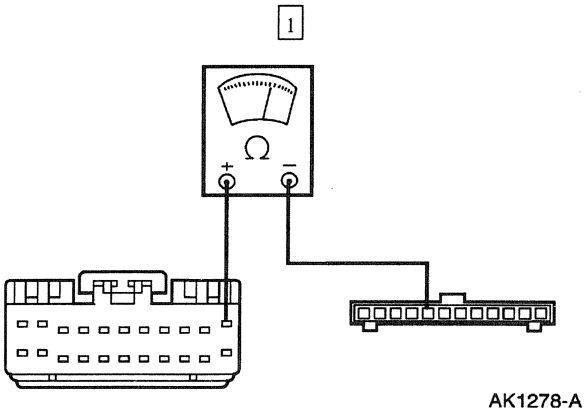 AK1278-A	1 Connect an ohmmeter between steering column/ignition/lighting (SCIL) module C286-11 and multi-function switch C215-5, circuit 1041 (BR/O). • Is the resistance 5 ohms or less? → **Yes** REPLACE the steering column/ignition/lighting control (SCIL) module. RETEST the system. → **No** REPAIR circuit 1041 (BR/O). RETEST the system.
P4 CHECK CIRCUIT 1042 (R/O) FOR A SHORT TO GROUND	
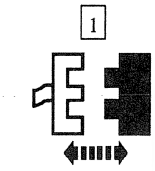 SCIL Module C286 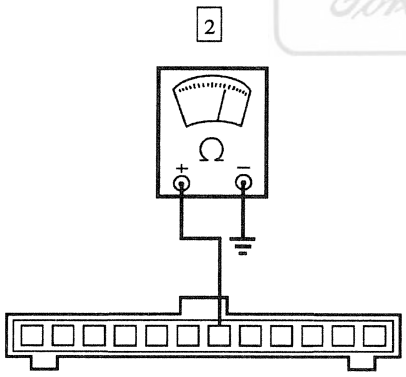 AK1277-A	2 Connect an ohmmeter between multi-function switch C215-7, circuit 1042 (R/O), and ground. • Is the resistance 10 kohms or less? → **Yes** REPAIR circuit 1042 (R/O). RETEST the system. → **No** GO to **P5**.

Official Licensed Product
Ford Motor Company

(Continued)

DIAGNOSIS AND TESTING (Continued)

PINPOINT TEST P: THE FLASH-TO-PASS FEATURE IS INOPERATIVE (Continued)

TEST CONDITIONS	TEST DETAILS/RESULTS/ACTIONS
P5 CHECK CIRCUIT 1042 (R/O) FOR AN OPEN	
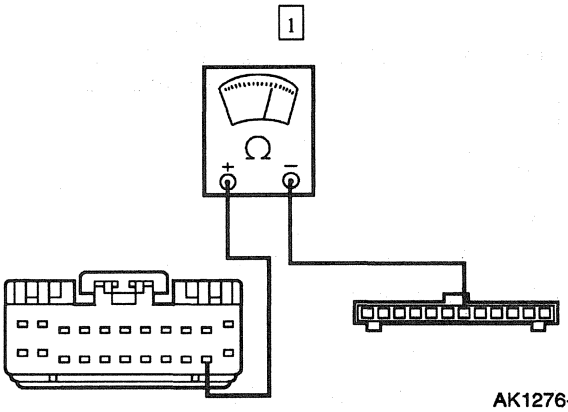	1 Connect an ohmmeter between SCIL module C286-21 and multi-function switch C215-7, circuit 1042 (R/O). • Is the resistance 5 ohms or less? → **Yes** GO to **P6**. → **No** REPAIR circuit 1042 (R/O). RETEST the system.
P6 CHECK THE MULTI-FUNCTION SWITCH	
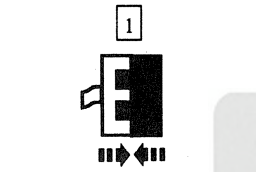 Multi-Function Switch C215 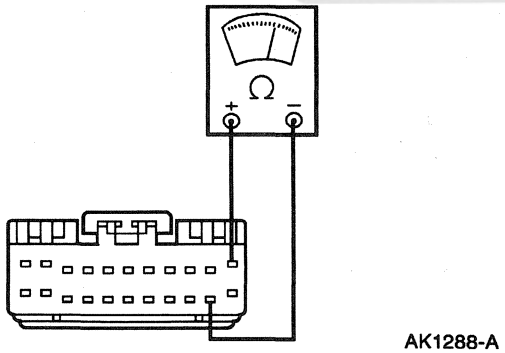	2 Connect an ohmmeter between SCIL module C286-11, circuit 1041 (BR/O), and SCIL C286-21, circuit 1042 (R/O).

(Continued)

Official Licensed Product
Ford Motor Company

DIAGNOSIS AND TESTING (Continued)

PINPOINT TEST P: THE FLASH-TO-PASS FEATURE IS INOPERATIVE (Continued)

TEST CONDITIONS	TEST DETAILS/RESULTS/ACTIONS
P6 CHECK THE MULTI-FUNCTION SWITCH (Continued)	
	3 Measure the resistance with multi-function switch in OFF, FLASH-TO-PASS, and HIGH BEAM positions. • Is the resistance between 300 and 360 ohms in FLASH-TO-PASS, between 2000 and 2400 ohms in HIGH BEAM, and greater than 10,000 ohms in OFF? → **Yes** REPLACE the SCIL module. RETEST the system. → **No** REPLACE the multi-function switch. RETEST the system.

Headlamps (With Autolamps)

Refer to Electrical and Vacuum Troubleshooting Manual, Cell 87, Automatic Headlamps/Delayed Exit for schematic and connector information.

Special Tool(s)

ST1137-A	73 Digital Multimeter or equivalent 105-R0051
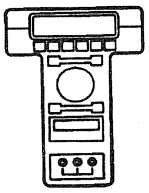 ST1217-A	New Generation STAR (NGS) Tester 418-F048 (007-00500)

Inspection and Verification

1. **NOTE:** If the headlamp switch loses power, the steering column/ignition/lighting (SCIL) module will automatically default to the autolamp mode. With the ignition switch in RUN, the autolamp function will turn on the exterior lamps and the instrument panel lighting depending on the input of the light sensor amplifier as in normal operation. However, the exit delay will be defaulted to the full three minutes.

   Verify the customer concern by operating the autolamp system to duplicate the condition.
2. Inspect to determine if one of the following mechanical or electrical concerns apply:

Official Licensed Product Ford Motor Company

DIAGNOSIS AND TESTING (Continued)

Visual Inspection Chart

Mechanical	Electrical
• Damaged light sensor amplifier • Damaged headlamp switch	• Circuitry open/shorted

3. If the concern remains after the inspection, connect the New Generation STAR (NGS) Tester to the data link connector (DLC) located beneath the instrument panel and select the vehicle to be tested from the NGS menu. If the NGS does not communicate with the vehicle:
   - checked that the program card is properly installed.
   - check the connections to the vehicle.
   - check the ignition switch position.
4. If the NGS still does not communicate with the vehicle, refer to the New Generation STAR Tester manual.
5. Perform the DATA LINK DIAGNOSTIC TEST. If the NGS responds with:
   - CKT914, CKT915 or CKT70 = ALL ECUS NO RESP/NOT EQUIP, refer to Section 418-00.
   - NO RESP/NOT EQUIP for SCIL module, go to Pinpoint Test H.
   - SYSTEM PASSED, retrieve and record the continuous diagnostic trouble codes (DTCs), erase the continuous DTCs and perform self-test diagnostics for the SCIL module.
6. If the DTCs retrieved are related to the concern, go to SCIL Diagnostic Trouble Code (DTC) Index to continue diagnostics.
7. If no DTCs related to the concern are retrieved, proceed to Symptom Chart to continue diagnostics.

SCIL Diagnostic Trouble Code (DTC) Index

SCIL Diagnostic Trouble Code (DTC) Index

DTC	Description	DTC Caused By	Action
C1446	Brake Switch Circuit Failure	SCIL	REFER to Section 206-05.
B1246	Panel Dim Potentiometer Switch Circuit Failure	SCIL	REFER to Section 417-02.
B1312	Lamp Headlamp Input Circuit Short to Battery	SCIL	GO to Pinpoint Test G.
B1334	Luggage Compartment Door Ajar Circuit Short to Ground	SCIL	REFER to Section 417-02.
B1342	ECU is Defective	SCIL	GO to Pinpoint Test A.
B1353	Ignition Key-In Circuit Open	SCIL	REFER to Section 501-12.
B1360	Ignition Run/ACC Circuit Open	SCIL	REFER to Section 501-12.
B1364	Ignition Run/Start Circuit Open	SCIL	REFER to Section 501-12.
B1446	Wiper Park Sense Circuit Failure	SCIL	GO to Pinpoint Test B.
B1485	Brake Pedal Input Short to B+	SCIL	GO to Pinpoint Test R.
B1490	Right Front Door Handle Short to Ground	SCIL	This is an invalid DTC. Do not attempt to repair.
B1498	Luggage Compartment Door Punch Out Sensor Shorted to Ground	SCIL	This is an invalid DTC. Do not attempt to repair.
B1509	Flash-to-Pass Switch Circuit Short to Battery	SCIL	GO to Pinpoint Test C.
B1522	Hood Switch Circuit Short to Ground	SCIL	REFER to Section 419-01A.
B1562	Door Lock Cylinder Circuit Short to Ground	SCIL	REFER to Section 419-01A.
B1566	Door Ajar Circuit Short to Ground	SCIL	REFER to Section 417-02.
B1600	PATS Ignition Key Transponder Signal Is Not Received	SCIL	REFER to Section 419-01B.

(Continued)

Official Licensed Product Ford Motor Company

DIAGNOSIS AND TESTING (Continued)

SCIL Diagnostic Trouble Code (DTC) Index

DTC	Description	DTC Caused By	Action
B1601	PATS Received Incorrect Key Code From Ignition Key Transponder	SCIL	REFER to Section 419-01B.
B1676	Battery Voltage Out of Range	SCIL	GO to Pinpoint Test D.
B1682	PATS is Disabled (Check Link Between PATS and Transponder)	SCIL	REFER to Section 419-01B.
B1687	Dome Lamp Input Circuit Short to Battery	SCIL	REFER to Section 417-02.
B1689	Autolamp Delay Circuit Failure	SCIL	GO to Pinpoint Test E.
B1796	Headlamp Low Beam Circuit Short to Battery	SCIL	GO to Pinpoint Test G.
B1875	Turn Signal/Hazard Switch Signal Circuit Short to Battery	SCIL	GO to Pinpoint Test V.
B1980	Bulb Outage Condition Detected	SCIL	GO to Pinpoint Test F.
B2328	Steering Column Reach Feedback Potentiometer Circuit Failure	SCIL	REFER to Section 211-05.
B2332	Steering Column Tilt Feedback Potentiometer Circuit Failure	SCIL	REFER to Section 211-05.
B2351	Steering Column Switch Signal Circuit Failure	SCIL	REFER to Section 211-05.
U1027	SCP Invalid or Missing Data for Engine RPM	PCM	REFER to Powertrain Control/Emissions Diagnosis Manual [3].
U1041	SCP Invalid or Missing Data for Vehicle Speed	ABS	REFER to Section 206-09, Inspection and Verification to continue diagnosis.
U1057	SCP Invalid or Missing Data for Vehicle Configuration	SCIL	REFER to Section 501-16, Inspection and Verification to continue diagnosis.
U1059	SCP Invalid or Missing Data for Transmission/Transaxle/PRNDL	PCM	REFER to Powertrain Control/Emissions Diagnosis Manual [3].
U1123	SCP Invalid or Missing Data for Odometer	ABS	REFER to Section 206-09, Inspection and Verification to continue diagnosis.
U1147	SCP Invalid or Missing Data for Vehicle Security	PCM	PERFORM J1850 Communication Network Diagnostics. GO to Communication Network Diagnostics in Section 418-00.
U1180	SCP Invalid or Missing Data for Personalization (Memory) Features	DDM	GO to Section 501-09, Inspection and Verification to continue diagnosis.
U1181	SCP Invalid or Missing Data for Personalization (Memory) Features	DDM	GO to Section 501-09, Inspection and Verification to continue diagnosis.
U1197	SCP Invalid or Missing Data for Door Locks	DDM	GO to Section 501-14B, Inspection and Verification to continue diagnosis.
U1198	SCP Invalid or Missing Data for External Access (Doors)	DDM	GO to Section 501-14B, Inspection and Verification to continue diagnosis.
U1199	SCP Invalid or Missing Data for External Access (Doors)	DDM	GO to Section 417-02, Inspection and Verification to continue diagnosis.
U1211	SCP Invalid or Missing Data for Restraints	DSM	GO to Section 413-08, Inspection and Verification to continue diagnosis.
U1222	SCP Invalid or Missing Data for Interior Lamps	DDM	GO to Section 501-14B, Inspection and Verification to continue diagnosis.

Official Licensed Product
Ford Motor Company

3 Can be purchased as a separate item.

DIAGNOSIS AND TESTING (Continued)

SCIL Parameter Identification (PID) Index

SCIL Parameter Identification Index

PID	Description	Expected Values
CCNTSCI	Number of Continuous DTCs on SCIL	one count per bit
BOO__SCI	Brake Switch Input	ON, OFF
PRK__BRK	Parking Brake Switch Input	ON, OFF
TILT	Steering Column Tilt Switch	SHORT, UP, DOWN, OFF
TELESCP	Steering Column Telescope Switch	SHORT, IN, OUT, OFF
TILTPOS	Tilt Position Sensor	SENSED, notSEN
TELEPOS	Telescope Position Sensor	SENSED, notSEN
TURN__SW	Left and Right Turn Signal Switch	OFF, LEFT, RIGHT, SHORT
LBEAMSW	Low Beam Switch	ON, OFF
HBEAMSW	High Beam Switch	ON, OFF
PARK__SW	Parking Lamp Switch	ON, OFF
LIGHTSN	Ambient Light	DAY, NIGHT
FLASH	Flash to Pass Switch	ON, OFF
FTURN__L	Left and Right Front Turn Lamp	R__OPEN, L__OPEN, L/R__OPEN OK
RTURN__L	Left and Right Rear Turn Lamp	R__OPEN, L__OPEN, L/R__OPEN OK
TAILLMP	Left and Right Tail Lamp	OPEN, OK
LOWBEAM	Low Beam Lamp	R__OPEN, L__OPEN, L/R__OPEN OK
AUTOLMP	Autolamp Switch	ON, OFF
ALP__IMP	Autolamp Analog Input	0-100%
DOMESW	Dome Lamp Switch	ACTIVE, notACT
PANLDIM	Panel Dim Intensity Switch	0-100%
HOOD__SW	Hood Ajar Switch	AJAR, CLOSED
DECKLID	Decklid Ajar Switch	AJAR, CLOSED
P__DR__SW	Passenger Door Ajar Switch	AJAR, CLOSED
IGN__KEY	Ignition Key In/Out	IN, OUT
IGN__SCI	Ignition Switch	START, RUN, OFF, ACCSSY
WPPRKSW	Windshield Wiper Park Sense	notPRK, PARKED
NUMKEYS	Number of Ignition Key Codes Supported	BCD (valid range 0-16)
DRLKCYL	Door Lock Cylinder	ON, OFF
ENABLE	PATS System Status	ON, OFF
FAILSAF	PATS System Status	ON, OFF

Official Licensed Product Ford Motor Company

SCIL Active Command Index

SCIL Active Command Index

Active Command	Display	Action
PID LATCH	PID LATCH	ON, OFF
ONE TOUCH WINDOW DWN & ACCY DELAY	ACCY RLY	ON, OFF
WARNING LAMPS AND CHIME	CHIME	ON, OFF
	ANTI-THEFT	ON, OFF
	AUTOLMP	ON, OFF

(Continued)

DIAGNOSIS AND TESTING (Continued)

SCIL Active Command Index

Active Command	Display	Action
	HIGH BEAM	ON, OFF
INTERIOR COURTESY LAMPS	INT LAMPS MIRRORLMP	ON, OFF ON, OFF
DECKLID RELEASE	RELEASE	ON, OFF
TURN SIGNAL AND MARKER LAMPS	LF TURN	ON, OFF
	RF TURN	ON, OFF
	LR TURN	ON, OFF
	RR TURN	ON, OFF
	PARKLAMPS	ON, OFF
HEADLAMP CONTROL	LEFT LOW	ON, OFF
	RIGHT LOW	ON, OFF
	HIGH BEAM	ON, OFF
	DRUN LAMP	ON, OFF
	LF CORNER	ON, OFF
	RF CORNER	ON, OFF
HORN CONTROL	HORN	ON, OFF
BACKLIGHTING INTENSITY	INTENSITY	0%-100%
COURTESY LAMP INTENSITY	INTENSITY	0%-100%
DOOR AJAR SIGNAL	DOOR AJAR	ON, OFF
TRANSMIT SIGNAL COMMAND	TRANSMIT	ON, OFF
BRAKE SYSTEM	BRK/SHIFT	ON, OFF
	PARK BRK	ON, OFF
STEERING COLUMN CONTROL	TILT UP	ONE SECOND TIME OUT
	TILT DOWN	ONE SECOND TIME OUT
	TELSCP IN	ONE SECOND TIME OUT
	TELSCPOUT	ONE SECOND TIME OUT
KEYCODE ERASE TIME SET	MINUTES	8-63 MINUTES

Symptom Chart

Refer to the Electrical and Vacuum Troubleshooting Manual for connector numbers cited in the pinpoint tests.

DIAGNOSIS AND TESTING (Continued)

Symptom Chart

Condition	Possible Source	Action
• The Autolamps are Inoperative	• Circuitry. • Light sensor amplifier. • Headlamp switch. • SCIL module.	• GO to Pinpoint Test Q.

Pinpoint Tests

PINPOINT TEST Q: THE AUTOLAMPS ARE INOPERATIVE

TEST CONDITIONS	TEST DETAILS/RESULTS/ACTIONS
Q1 CHECK PID LIGHTSN	
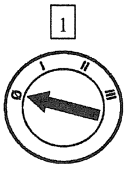 1 4 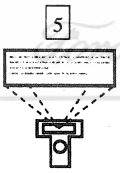 5 SCIL Module PID LIGHTSN	2 Cover the light sensor amplifier. 3 Set autolamp adjustment to MAX delay setting. • Does PID LIGHTSN read NIGHT? → **Yes** GO to **Q5**. → **No** GO to **Q2**.

Official Licensed Product Ford Motor Company

(Continued)

DIAGNOSIS AND TESTING (Continued)

PINPOINT TEST Q: THE AUTOLAMPS ARE INOPERATIVE (Continued)

TEST CONDITIONS	TEST DETAILS/RESULTS/ACTIONS
Q2 CHECK CIRCUIT 221 (O/W) FOR A SHORT TO GROUND	
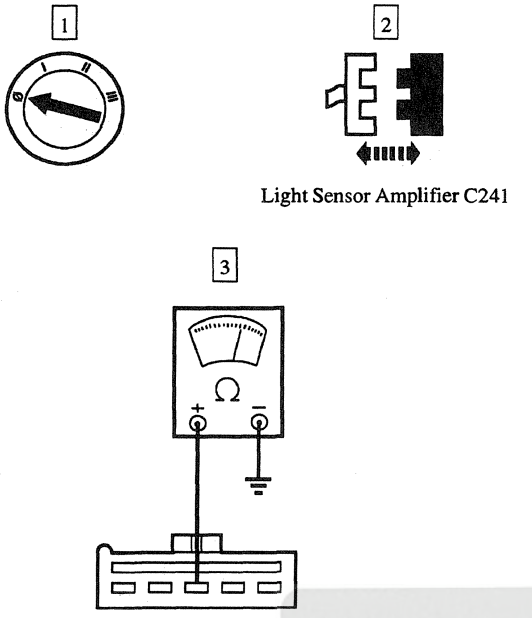 Light Sensor Amplifier C241 AK1285-A	3 Connect an ohmmeter between light sensor amplifier C241, circuit 221 (O/W), and ground. • Is the resistance less than 2000 ohms? → **Yes** REPAIR circuit 221 (O/W). RETEST the system. → **No** GO to **Q3**.
Q3 CHECK LIGHT SENSOR AMPLIFIER	
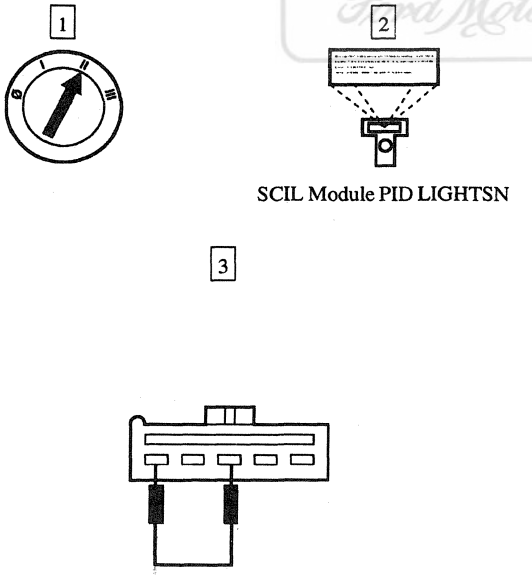 SCIL Module PID LIGHTSN AK1286-A	3 Connect a jumper wire between light sensor amplifier C241, circuit 221 (O/W), and circuit 640 (R/Y). • Does PID LIGHTSN read NIGHT? → **Yes** REPLACE the light sensor amplifier. RETEST the system. → **No** LEAVE the jumper wire in place and GO to **Q4**.

Official Licensed Product Ford Motor Company

(Continued)

DIAGNOSIS AND TESTING (Continued)

PINPOINT TEST Q: THE AUTOLAMPS ARE INOPERATIVE (Continued)

TEST CONDITIONS	TEST DETAILS/RESULTS/ACTIONS
Q4 CHECK CIRCUIT 221 (O/W) FOR OPEN	
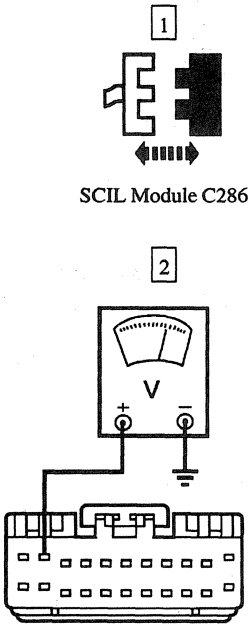 SCIL Module C286 AK1287-A	2 Connect a voltmeter to steering column/ignition/lighting (SCIL) module C286-2, circuit 221 (O/W). • Is the voltage reading B+? → **Yes** REPLACE the SCIL module. RETEST the system. → **No** REPAIR circuit 221 (O/W). RETEST the system.
Q5 CHECK THE HEADLAMP SWITCH	
 Headlamp Switch C262 SCIL Module PID ALP__IMP	• Does PID ALP__IMP read 0%? → **Yes** GO to **Q6**. → **No** REPLACE the headlamp switch. RETEST the system.

(Continued)

Official Licensed Product Ford Motor Company

DIAGNOSIS AND TESTING (Continued)

PINPOINT TEST Q: THE AUTOLAMPS ARE INOPERATIVE (Continued)

TEST CONDITIONS	TEST DETAILS/RESULTS/ACTIONS
Q6 CHECK CIRCUIT 188 (W/BK) FOR A SHORT TO BATTERY	
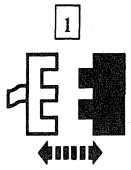 SCIL Module C286 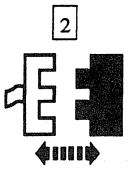 SCIL Module PID ALP__IMP	• Does PID ALP__IMP read 0%? → **Yes** REPLACE the SCIL module. RETEST the system. → **No** REPAIR circuit 188 (W/BK). RETEST the system.

Stoplamps

Refer to Electrical and Vacuum Troubleshooting Manual, Cell 58, Lighting Control Module for schematic and connector information.

Refer to Electrical and Vacuum Troubleshooting Manual, Cell 90, Turn/Stop/Hazard Lamps for schematic and connector information.

Special Tool(s)

 ST1137-A	73 Digital Multimeter or equivalent 105-R0051
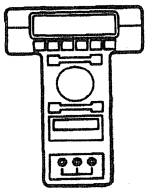 ST1217-A	New Generation STAR (NGS) Tester or equivalent 418-F048 (007-00500)

Inspection and Verification

1. **NOTE:** If the headlamp switch loses power, the steering column/ignition/lighting (SCIL) module will automatically default to the autolamp mode. With the ignition switch in RUN, the autolamp function will turn on the exterior lamps and the instrument panel lighting depending on the input of the light sensor amplifier as in normal operation. However, the exit delay will be defaulted to the full three minutes.

   Verify the customer concern by operating the stoplamp system to duplicate the condition.
2. Inspect to determine if one of the following electrical concerns apply:

Visual Inspection Chart

Electrical
• Circuitry • Damaged fuses: fuse junction panel fuse 32 (15A), 19 (10A), 26 (15A), 1 (10A), 25 (10A), 13 (15A), 7 (15A), 12 (15A) and 31 (10A) • Damaged brake pedal position (BPP) switch • Damaged connectors

Official Licensed Ford Motor Company

DIAGNOSIS AND TESTING (Continued)

3. If the concern remains after the inspection, connect the New Generation STAR (NGS) Tester to the data link connector (DLC) located beneath the instrument panel and select the vehicle to be tested from the NGS menu. If the NGS does not communicate with the vehicle:
   - checked that the program card is properly installed.
   - check the connections to the vehicle.
   - check the ignition switch position.
4. If the NGS still does not communicate with the vehicle, refer to the New Generation STAR Tester manual.
5. Perform the DATA LINK DIAGNOSTIC TEST. If the NGS responds with:
   - CKT914, CKT915 or CKT70 = ALL ECUS NO RESP/NOT EQUIP, refer to Section 418-00.
   - NO RESP/NOT EQUIP for SCIL module, go to Pinpoint Test H.
   - SYSTEM PASSED, retrieve and record the continuous diagnostic trouble codes (DTCs), erase the continuous DTCs and perform self-test diagnostics for the SCIL module.
6. If the DTCs retrieved are related to the concern, go to SCIL Diagnostic Trouble Code (DTC) Index to continue diagnostics.
7. If no DTCs related to the concern are retrieved, proceed to Symptom Chart to continue diagnostics.

SCIL Diagnostic Trouble Code (DTC) Index

SCIL Diagnostic Trouble Code (DTC) Index

DTC	Description	DTC Caused By	Action
C1446	Brake Switch Circuit Failure	SCIL	REFER to Section 206-05.
B1246	Panel Dim Potentiometer Switch Circuit Failure	SCIL	REFER to Section 417-02.
B1312	Lamp Headlamp Input Circuit Short to Battery	SCIL	GO to Pinpoint Test G.
B1334	Luggage Compartment Door Ajar Circuit Short to Ground	SCIL	REFER to Section 417-02.
B1342	ECU is Defective	SCIL	GO to Pinpoint Test A.
B1353	Ignition Key-In Circuit Open	SCIL	REFER to Section 501-12.
B1360	Ignition Run/ACC Circuit Open	SCIL	REFER to Section 501-12.
B1364	Ignition Run/Start Circuit Open	SCIL	REFER to Section 501-12.
B1446	Wiper Park Sense Circuit Failure	SCIL	GO to Pinpoint Test B.
B1485	Brake Pedal Input Short to B+	SCIL	GO to Pinpoint Test R.
B1490	Right Front Door Handle Short to Ground	SCIL	This is an invalid DTC. Do not attempt to repair.
B1498	Luggage Compartment Door Punch Out Sensor Shorted to Ground	SCIL	This is an invalid DTC. Do not attempt to repair.
B1509	Flash-to-Pass Switch Circuit Short to Battery	SCIL	GO to Pinpoint Test C.
B1522	Hood Switch Circuit Short to Ground	SCIL	REFER to Section 419-01A.
B1562	Door Lock Cylinder Circuit Short to Ground	SCIL	REFER to Section 419-01A.
B1566	Door Ajar Circuit Short to Ground	SCIL	REFER to Section 417-02.
B1600	PATS Ignition Key Transponder Signal Is Not Received	SCIL	REFER to Section 419-01B.

(Continued)

Official Licensed Product Ford Motor Company

DIAGNOSIS AND TESTING (Continued)

SCIL Diagnostic Trouble Code (DTC) Index

DTC	Description	DTC Caused By	Action
B1601	PATS Received Incorrect Key Code From Ignition Key Transponder	SCIL	REFER to Section 419-01B.
B1676	Battery Voltage Out of Range	SCIL	GO to Pinpoint Test D.
B1682	PATS is Disabled (Check Link Between PATS and Transponder)	SCIL	REFER to Section 419-01B.
B1687	Dome Lamp Input Circuit Short to Battery	SCIL	REFER to Section 417-02.
B1689	Autolamp Delay Circuit Failure	SCIL	GO to Pinpoint Test E.
B1796	Headlamp Low Beam Circuit Short to Battery	SCIL	GO to Pinpoint Test G.
B1875	Turn Signal/Hazard Switch Signal Circuit Short to Battery	SCIL	GO to Turn Signal Lamps/Hazard Flasher Lamps.
B1980	Bulb Outage Condition Detected	SCIL	GO to Pinpoint Test F.
B2328	Steering Column Reach Feedback Potentiometer Circuit Failure	SCIL	REFER to Section 211-05.
B2332	Steering Column Tilt Feedback Potentiometer Circuit Failure	SCIL	REFER to Section 211-05.
B2351	Steering Column Switch Signal Circuit Failure	SCIL	REFER to Section 211-05.
U1027	SCP Invalid or Missing Data for Engine RPM	PCM	REFER to Powertrain Control/Emissions Diagnosis Manual [4].
U1041	SCP Invalid or Missing Data for Vehicle Speed	ABS	REFER to Section 206-09, Inspection and Verification to continue diagnosis.
U1057	SCP Invalid or Missing Data for Vehicle Configuration	SCIL	REFER to Section 501-16, Inspection and Verification to continue diagnosis.
U1059	SCP Invalid or Missing Data for Transmission/Transaxle/PRNDL	PCM	REFER to Powertrain Control/Emissions Diagnosis Manual [4].
U1123	SCP Invalid or Missing Data for Odometer	ABS	REFER to Section 206-09, Inspection and Verification to continue diagnosis.
U1147	SCP Invalid or Missing Data for Vehicle Security	PCM	PERFORM J1850 Communication Network Diagnostics. GO to Communication Network Diagnostics in Section 418-00.
U1180	SCP Invalid or Missing Data for Personalization (Memory) Features	DDM	GO to Section 501-09, Inspection and Verification to continue diagnosis.
U1181	SCP Invalid or Missing Data for Personalization (Memory) Features	DDM	GO to Section 501-09, Inspection and Verification to continue diagnosis.
U1197	SCP Invalid or Missing Data for Door Locks	DDM	GO to Section 501-14B, Inspection and Verification to continue diagnosis.
U1198	SCP Invalid or Missing Data for External Access (Doors)	DDM	GO to Section 501-14B, Inspection and Verification to continue diagnosis.
U1199	SCP Invalid or Missing Data for External Access (Doors)	DDM	GO to Section 417-02, Inspection and Verification to continue diagnosis.
U1211	SCP Invalid or Missing Data for Restraints	DSM	GO to Section 413-08, Inspection and Verification to continue diagnosis.
U1222	SCP Invalid or Missing Data for Interior Lamps	DDM	GO to Section 501-14B, Inspection and Verification to continue diagnosis.

4 Can be purchased as a separate item.

DIAGNOSIS AND TESTING (Continued)

SCIL Parameter Identification (PID) Index

SCIL Parameter Identification Index

PID	Description	Expected Values
CCNTSCI	Number of Continuous DTCs on SCIL	one count per bit
BOO__SCI	Brake Switch Input	ON, OFF
PRK__BRK	Parking Brake Switch Input	ON, OFF
TILT	Steering Column Tilt Switch	SHORT, UP, DOWN, OFF
TELESCP	Steering Column Telescope Switch	SHORT, IN, OUT, OFF
TILTPOS	Tilt Position Sensor	SENSED, notSEN
TELEPOS	Telescope Position Sensor	SENSED, notSEN
TURN__SW	Left and Right Turn Signal Switch	OFF, LEFT, RIGHT, SHORT
LBEAMSW	Low Beam Switch	ON, OFF
HBEAMSW	High Beam Switch	ON, OFF
PARK__SW	Parking Lamp Switch	ON, OFF
LIGHTSN	Ambient Light	DAY, NIGHT
FLASH	Flash to Pass Switch	ON, OFF
FTURN__L	Left and Right Front Turn Lamp	R__OPEN, L__OPEN, L/R__OPEN OK
RTURN__L	Left and Right Rear Turn Lamp	R__OPEN, L__OPEN, L/R__OPEN OK
TAILLMP	Left and Right Tail Lamp	OPEN, OK
LOWBEAM	Low Beam Lamp	R__OPEN, L__OPEN, L/R__OPEN OK
AUTOLMP	Autolamp Switch	ON, OFF
ALP__IMP	Autolamp Analog Input	0-100%
DOMESW	Dome Lamp Switch	ACTIVE, notACT
PANLDIM	Panel Dim Intensity Switch	0-100%
HOOD__SW	Hood Ajar Switch	AJAR, CLOSED
DECKLID	Decklid Ajar Switch	AJAR, CLOSED
P__DR__SW	Passenger Door Ajar Switch	AJAR, CLOSED
IGN__KEY	Ignition Key In/Out	IN, OUT
IGN__SCI	Ignition Switch	START, RUN, OFF, ACCSSY
WPPRKSW	Windshield Wiper Park Sense	notPRK, PARKED
NUMKEYS	Number of Ignition Key Codes Supported	BCD (valid range 0-16)
DRLKCYL	Door Lock Cylinder	ON, OFF
ENABLE	PATS System Status	ON, OFF
FAILSAF	PATS System Status	ON, OFF

Official Licensed Product Ford Motor Company

SCIL Active Command Index

SCIL Active Command Index

Active Command	Display	Action
PID LATCH	PID LATCH	ON, OFF
ONE TOUCH WINDOW DWN & ACCY DELAY	ACCY RLY	ON, OFF
WARNING LAMPS AND CHIME	CHIME	ON, OFF
	ANTI-THEFT	ON, OFF
	AUTOLMP	ON, OFF

(Continued)

DIAGNOSIS AND TESTING (Continued)

SCIL Active Command Index

Active Command	Display	Action
	HIGH BEAM	ON, OFF
INTERIOR COURTESY LAMPS	INT LAMPS MIRRORLMP	ON, OFF ON, OFF
DECKLID RELEASE	RELEASE	ON, OFF
TURN SIGNAL AND MARKER LAMPS	LF TURN	ON, OFF
	RF TURN	ON, OFF
	LR TURN	ON, OFF
	RR TURN	ON, OFF
	PARKLAMPS	ON, OFF
HEADLAMP CONTROL	LEFT LOW	ON, OFF
	RIGHT LOW	ON, OFF
	HIGH BEAM	ON, OFF
	DRUN LAMP	ON, OFF
	LF CORNER	ON, OFF
	RF CORNER	ON, OFF
HORN CONTROL	HORN	ON, OFF
BACKLIGHTING INTENSITY	INTENSITY	0%-100%
COURTESY LAMP INTENSITY	INTENSITY	0%-100%
DOOR AJAR SIGNAL	DOOR AJAR	ON, OFF
TRANSMIT SIGNAL COMMAND	TRANSMIT	ON, OFF
BRAKE SYSTEM	BRK/SHIFT	ON, OFF
	PARK BRK	ON, OFF
STEERING COLUMN CONTROL	TILT UP	ONE SECOND TIME OUT
	TILT DOWN	ONE SECOND TIME OUT
	TELSCP IN	ONE SECOND TIME OUT
	TELSCPOUT	ONE SECOND TIME OUT
KEYCODE ERASE TIME SET	MINUTES	8-63 MINUTES

Symptom Chart

Symptom Chart

Condition	Possible Source	Action
• No Communication With the Steering Column/Ignition/Lighting Control Module	• SCIL module. • Circuitry.	• GO to Pinpoint Test H.
• The Stoplamps Are Inoperative — All Stoplamps	• Circuitry. • Fuse. • Brake pedal position (BPP) switch. • SCIL module.	• GO to Pinpoint Test R.
• The Stoplamps Are Inoperative — Not All Stoplamps	• Circuitry. • SCIL module.	• GO to Pinpoint Test S.
• The Stoplamps Are Inoperative — High-Mount Stoplamp/Neon Stoplamp	• Circuitry.	• GO to Pinpoint Test T.

DIAGNOSIS AND TESTING (Continued)

Symptom Chart (Continued)

Condition	Possible Source	Action
• One Or More Stoplamps Are Inoperative	• Circuitry. • Damaged bulb.	• REPAIR as required.
• The Stoplamps Are On Continuously	• SCIL module. • BPP switch. • Circuitry.	• GO to Pinpoint Test U.

Pinpoint Tests

PINPOINT TEST R: THE STOPLAMPS ARE INOPERATIVE — ALL STOPLAMPS

TEST CONDITIONS	TEST DETAILS/RESULTS/ACTIONS
R1 CHECK THE SUPPLY TO THE BRAKE PEDAL POSITION (BPP) SWITCH	
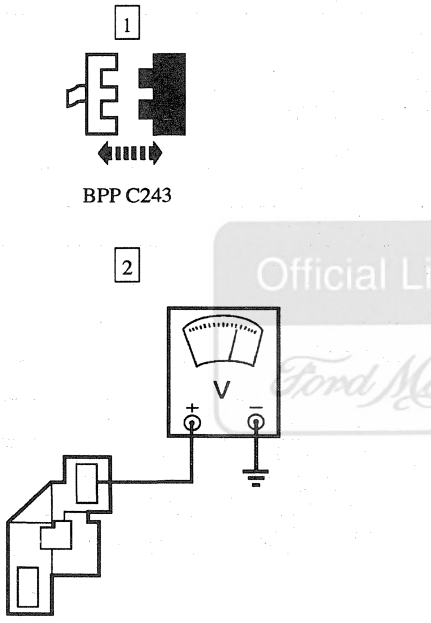 AK1292-A	2 Connect a voltmeter between BPP C243, circuit 10 (LG/R), and ground. • Is the voltage reading B+? → **Yes** GO to **R5**. → **No** GO to **R2**.
R2 CHECK FUSE JUNCTION PANEL FUSE 32 (15A)	
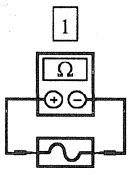 Fuse Junction Panel Fuse 32 (15A)	• Is the fuse OK? → **Yes** REPAIR circuit 10 (LG/R). RETEST the system. → **No** GO to **R3**.

(Continued)

Official Licensed Product Ford Motor Company

DIAGNOSIS AND TESTING (Continued)

PINPOINT TEST R: THE STOPLAMPS ARE INOPERATIVE — ALL STOPLAMPS (Continued)

TEST CONDITIONS	TEST DETAILS/RESULTS/ACTIONS
R3 CHECK CIRCUIT 10 (LG/R) FOR A SHORT	
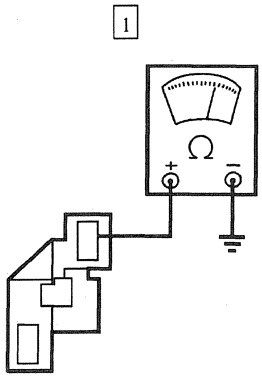 AK1293-A	1 Connect an ohmmeter between BPP C243, circuit 10 (LG/R), and ground. • Is the resistance 10 kohms or less? → **Yes** REPAIR circuit 10 (LG/R). RETEST the system. → **No** GO to **R4**.
R4 CHECK CIRCUIT 511 (LG) FOR A SHORT	
Neon Parking/Stoplamp Ballast C403 Rear High-Mount Lamp Bulbs 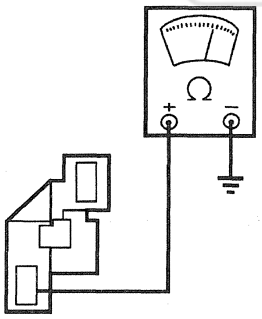 AK1294-A	3 Connect an ohmmeter between BPP C243, circuit 511 (LG), and ground. • Is the resistance 10 ohms or less? → **Yes** REPAIR circuit 511 (LG). RETEST the system. → **No** REPLACE fuse junction panel fuse 32 (15A). RETEST the system.

Official Licensed Product Ford Motor Company

(Continued)

DIAGNOSIS AND TESTING (Continued)

PINPOINT TEST R: THE STOPLAMPS ARE INOPERATIVE — ALL STOPLAMPS (Continued)

TEST CONDITIONS	TEST DETAILS/RESULTS/ACTIONS
R5 CHECK THE BRAKE PEDAL POSITION (BPP) SWITCH	
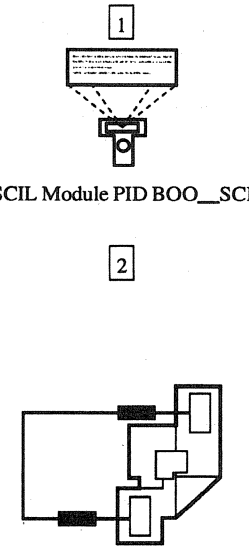	2 Connect a jumper wire between BPP switch C243, circuit 10 (LG/R), and BPP switch C243, circuit 511 (LG). • Does PID BOO__SCI read ON? → **Yes** REPLACE the BPP switch. RETEST the system. → **No** REPAIR circuit 511 (LG). RETEST the system.

Officially Licensed Product Ford Motor Company

PINPOINT TEST S: THE STOPLAMPS ARE INOPERATIVE — NOT ALL STOPLAMPS

TEST CONDITIONS	TEST DETAILS/RESULTS/ACTIONS
S1 CHECK FOR REAR HIGH-MOUNT STOPLAMP OPERATION	
	1 Apply the brake pedal. • Does the rear high-mount stoplamp come on? → **Yes** GO to **S2**. → **No** GO to Pinpoint Test R.

(Continued)

DIAGNOSIS AND TESTING (Continued)

PINPOINT TEST S: THE STOPLAMPS ARE INOPERATIVE — NOT ALL STOPLAMPS (Continued)

TEST CONDITIONS	TEST DETAILS/RESULTS/ACTIONS
S2 CHECK PID BOO__SCI	
1 SCIL Module PID BOO__SCI	2 Apply the brake pedal. • Does PID BOO__SCI read ON? → **Yes** GO to **S3**. → **No** REPAIR circuit 511 (LG). RETEST the system.
S3 CHECK FOR DTC B1980	
1 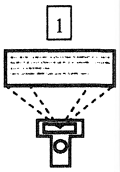 SCIL Module Self-Test	• Is DTC B1980 retrieved? → **Yes** GO to Pinpoint Test F. → **No** GO to **S4**.

Official Licensed Product
Ford Motor Company

(Continued)

DIAGNOSIS AND TESTING (Continued)

PINPOINT TEST S: THE STOPLAMPS ARE INOPERATIVE — NOT ALL STOPLAMPS (Continued)

TEST CONDITIONS	TEST DETAILS/RESULTS/ACTIONS
S4 CHECK FOR TURN SIGNAL OPERATION	
1 	2 Operate both left and right turn signals. • Do both left and right rear turn signals operate properly? → **Yes** REPLACE the SCIL module. RETEST the system. → **No** GO to Turn Signal/Cornering/Hazard Flasher Lamps.

PINPOINT TEST T: THE STOPLAMPS ARE INOPERATIVE — HIGH-MOUNT STOPLAMP/NEON STOPLAMP

Official Licensed Product Ford Motor Company

TEST CONDITIONS	TEST DETAILS/RESULTS/ACTIONS
T1 CHECK FOR STOPLAMP OPERATION	
	1 Apply the brake pedal. • Do the stoplamps come on? → **Yes** GO to **T2**. → **No** GO to Pinpoint Test R.
T2 CHECK FOR REAR HIGH-MOUNT STOPLAMP OPERATION	
	1 Apply the brake pedal. • Does the rear high-mount stoplamp come on? → **Yes** GO to **T5**. → **No** GO to **T3**.

(Continued)

DIAGNOSIS AND TESTING (Continued)

PINPOINT TEST T: THE STOPLAMPS ARE INOPERATIVE — HIGH-MOUNT STOPLAMP/NEON STOPLAMP (Continued)

TEST CONDITIONS	TEST DETAILS/RESULTS/ACTIONS
T3 CHECK NEON STOPLAMP	
	1 Apply the brake pedal. • Does the neon stoplamp come on? → **Yes** GO to **T4**. → **No** REPAIR circuit 511 (LG). RETEST the system.
T4 CHECK CIRCUIT 57 (BK) FOR AN OPEN	
1 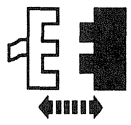 Rear High-Mount Stoplamp C346 2 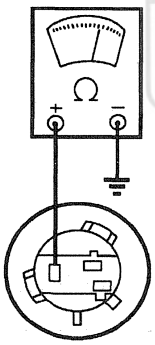 AK1319-A	2 Connect an ohmmeter between rear high-mount stoplamp C346, circuit 57 (BK), and ground. • Is the resistance 5 ohms or less? → **Yes** REPAIR circuit 511 (LG). RETEST the system. → **No** REPAIR circuit 57 (BK). RETEST the system.

Official Licensed Product
Ford Motor Company

(Continued)

DIAGNOSIS AND TESTING (Continued)

PINPOINT TEST T: THE STOPLAMPS ARE INOPERATIVE — HIGH-MOUNT STOPLAMP/NEON STOPLAMP (Continued)

TEST CONDITIONS	TEST DETAILS/RESULTS/ACTIONS
T5 CHECK CIRCUIT 511 (LG) FOR AN OPEN	
1 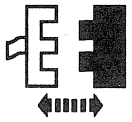 Neon Parking/Stoplamp Ballast C403 2 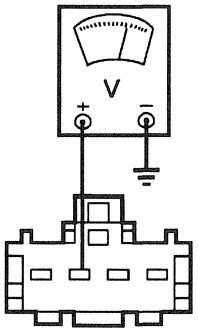 AK1296-A	2 Connect a voltmeter between neon parking/stoplamp ballast C403, circuit 511 (LG), and ground. 3 Apply the brake pedal. • Is the voltage reading B+? → **Yes** GO to **T6**. → **No** REPAIR circuit 511 (LG). RETEST the system.
T6 CHECK THE GROUND	
1 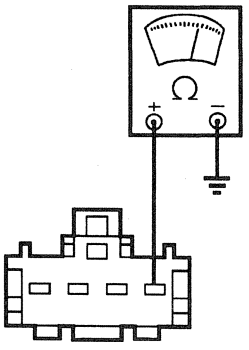 AK1297-A	1 Connect an ohmmeter between neon parking/stoplamp ballast C403, circuit 57 (BK), and ground. • Is the resistance 5 ohms or less? → **Yes** REPLACE the neon parking/stoplamp. RETEST the system. → **No** REPAIR circuit 57 (BK). RETEST the system.

Official Licensed Product
Ford Motor Company

DIAGNOSIS AND TESTING (Continued)

PINPOINT TEST U: THE STOPLAMPS ARE ON CONTINUOUSLY

TEST CONDITIONS	TEST DETAILS/RESULTS/ACTIONS
U1 CHECK PID BOO__SCI	
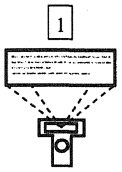 SCIL Module PID BOO__SCI	• Does PID BOO__SCI read ON? → **Yes** GO to **U2**. → **No** GO to **U5**.
U2 CHECK THE BRAKE PEDAL POSITION (BPP) SWITCH FOR A SHORT	
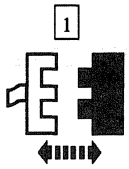 BPP Switch C243 SCIL Module PID BOO__SCI	• Does PID BOO__SCI read ON? → **Yes** GO to **U3**. → **No** REPLACE the BPP switch. RETEST the system.
U3 CHECK NEON STOPLAMP FOR A SHORT	
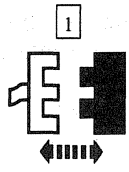 Neon Parking/Stoplamp C403 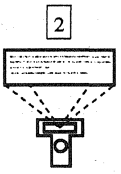 SCIL Module PID BOO__SCI	• Does PID BOO__SCI read ON? → **Yes** GO to **U4**. → **No** REPLACE the neon parking/stoplamp ballast. RETEST the system.

(Continued)

Official Licensed Product
Ford Motor Company

DIAGNOSIS AND TESTING (Continued)

PINPOINT TEST U: THE STOPLAMPS ARE ON CONTINUOUSLY (Continued)

TEST CONDITIONS	TEST DETAILS/RESULTS/ACTIONS
U4 CHECK THE STEERING COLUMN/IGNITION/LIGHTING (SCIL) MODULE FOR A SHORT	
1 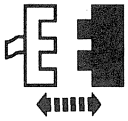 SCIL Module C288 2 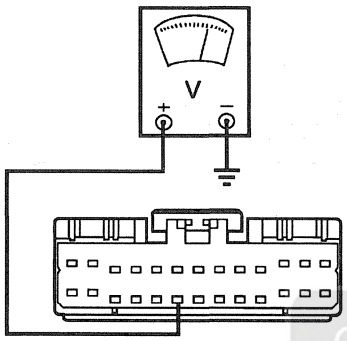 AK1298-A	2 Connect a voltmeter between SCIL module C288-19, circuit 511 (LG), and ground. • Is the voltage reading 0 volts? → **Yes** REPLACE the SCIL module. RETEST the system. → **No** REPAIR circuit 511 (LG). RETEST the system.
U5 CHECK FOR AN INTERMITTENT CONDITION	
1 SCIL Module Active Command PIDLATCH 2 Select PID BOO__SCI	3 Tap on the connectors and flex the harness between the BPP switch, SCIL module and the stoplamps. • Does PID BOO__SCI change states? → **Yes** REPAIR the intermittent short to B+ in circuit 511 (LG). → **No** The system is operating properly at this time.

Official Licensed Product Ford Motor Company

Turn Signal/Cornering/Hazard Lamps

Refer to Electrical and Vacuum Troubleshooting Manual, Cell 58, Lighting Control Module for schematic and connector information.

Refer to Electrical and Vacuum Troubleshooting Manual, Cell 90, Turn/Stop/Hazard Lamps for schematic and connector information.

DIAGNOSIS AND TESTING (Continued)

Refer to Electrical and Vacuum Troubleshooting Manual, Cell 91, Cornering Lamps for schematic and connector information.

Special Tool(s)

ST1137-A	73 Digital Multimeter or equivalent 105-R0051
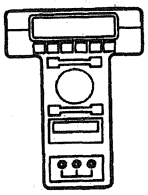 ST1217-A	New Generation STAR (NGS) Tester or equivalent 418-F048 (007-00500)

Inspection and Verification

1. **NOTE:** If the headlamp switch loses power, the steering column/ignition/lighting (SCIL) module will automatically default to the autolamp mode. With the ignition switch in RUN, the autolamp function will turn on the exterior lamps and the instrument panel lighting depending on the input of the light sensor amplifier as in normal operation. However, the exit delay will be defaulted to the full three minutes.

   Verify the customer concern by operating the turn signal/hazard flasher lamps to duplicate the condition.
2. Inspect to determine if any of the following electrical concerns apply:

Visual Inspection Chart

Electrical
• Circuitry open/shorted • Damaged fuse: Fuse Junction Panel fuse 7 (15A), 13 (15A), 31 (10A), 12 (15A), 26 (15A), 1 (10A), 25 (10A) • Damaged multi-function switch • Miniature bulb open • Damaged SCIL module

3. If the concern remains after the inspection, connect the New Generation STAR (NGS) Tester to the data link connector (DLC) located beneath the instrument panel and select the vehicle to be tested from the NGS menu. If the NGS does not communicate with the vehicle:
   - checked that the program card is properly installed.
   - check the connections to the vehicle.
   - check the ignition switch position.
4. If the NGS still does not communicate with the vehicle, refer to the New Generation STAR Tester manual.
5. Perform the DATA LINK DIAGNOSTIC TEST. If the NGS responds with:
   - CKT914, CKT915 or CKT70 = ALL ECUS NO RESP/NOT EQUIP, refer to Section 418-00.
   - NO RESP/NOT EQUIP for SCIL module, go to Pinpoint Test H.
   - SYSTEM PASSED, retrieve and record the continuous diagnostic trouble codes (DTCs), erase the continuous DTCs and perform self-test diagnostics for the SCIL module.
6. If the DTCs retrieved are related to the concern, go to SCIL Diagnostic Trouble Code (DTC) Index to continue diagnostics.
7. If no DTCs related to the concern are retrieved, proceed to Symptom Chart to continue diagnostics.

SCIL Diagnostic Trouble Code (DTC) Index

SCIL Diagnostic Trouble Code (DTC) Index

DTC	Description	DTC Caused By	Action
C1446	Brake Switch Circuit Failure	SCIL	REFER to Section 206-05.
B1246	Panel Dim Potentiometer Switch Circuit Failure	SCIL	REFER to Section 417-02.

(Continued)

DIAGNOSIS AND TESTING (Continued)

SCIL Diagnostic Trouble Code (DTC) Index

DTC	Description	DTC Caused By	Action
B1312	Lamp Headlamp Input Circuit Short to Battery	SCIL	GO to Pinpoint Test G.
B1334	Luggage Compartment Door Ajar Circuit Short to Ground	SCIL	REFER to Section 417-02.
B1342	ECU is Defective	SCIL	GO to Pinpoint Test A.
B1353	Ignition Key-In Circuit Open	SCIL	REFER to Section 501-12.
B1360	Ignition Run/ACC Circuit Open	SCIL	REFER to Section 501-12.
B1364	Ignition Run/Start Circuit Open	SCIL	REFER to Section 501-12.
B1446	Wiper Park Sense Circuit Failure	SCIL	GO to Pinpoint Test B.
B1485	Brake Pedal Input Short to B+	SCIL	GO to Pinpoint Test R.
B1490	Right Front Door Handle Short to Ground	SCIL	This is an invalid DTC. Do not attempt to repair.
B1498	Luggage Compartment Door Punch Out Sensor Shorted to Ground	SCIL	This is an invalid DTC. Do not attempt to repair.
B1509	Flash-to-Pass Switch Circuit Short to Battery	SCIL	GO to Pinpoint Test C.
B1522	Hood Switch Circuit Short to Ground	SCIL	REFER to Section 419-01A.
B1562	Door Lock Cylinder Circuit Short to Ground	SCIL	REFER to Section 419-01A.
B1566	Door Ajar Circuit Short to Ground	SCIL	REFER to Section 417-02.
B1600	PATS Ignition Key Transponder Signal Is Not Received	SCIL	REFER to Section 419-01B.
B1601	PATS Received Incorrect Key Code From Ignition Key Transponder	SCIL	REFER to Section 419-01B.
B1676	Battery Voltage Out of Range	SCIL	GO to Pinpoint Test D.
B1682	PATS is Disabled (Check Link Between PATS and Transponder)	SCIL	REFER to Section 419-01B.
B1687	Dome Lamp Input Circuit Short to Battery	SCIL	REFER to Section 417-02.
B1689	Autolamp Delay Circuit Failure	SCIL	GO to Pinpoint Test E.
B1796	Headlamp Low Beam Circuit Short to Battery	SCIL	GO to Pinpoint Test G.
B1875	Turn Signal/Hazard Switch Signal Circuit Short to Battery	SCIL	GO to Pinpoint Test V.
B1980	Bulb Outage Condition Detected	SCIL	GO to Pinpoint Test F.
B2328	Steering Column Reach Feedback Potentiometer Circuit Failure	SCIL	REFER to Section 211-05.
B2332	Steering Column Tilt Feedback Potentiometer Circuit Failure	SCIL	REFER to Section 211-05.
B2351	Steering Column Switch Signal Circuit Failure	SCIL	REFER to Section 211-05.
U1027	SCP Invalid or Missing Data for Engine RPM	PCM	REFER to Powertrain Control/Emissions Diagnosis Manual [5].
U1041	SCP Invalid or Missing Data for Vehicle Speed	ABS	REFER to Section 206-09, Inspection and Verification to continue diagnosis.
U1057	SCP Invalid or Missing Data for Vehicle Configuration	SCIL	REFER to Section 501-16, Inspection and Verification to continue diagnosis.

(Continued)

5 Can be purchased as a separate item.

DIAGNOSIS AND TESTING (Continued)

SCIL Diagnostic Trouble Code (DTC) Index

DTC	Description	DTC Caused By	Action
U1059	SCP Invalid or Missing Data for Transmission/Transaxle/PRNDL	PCM	REFER to Powertrain Control/Emissions Diagnosis Manual [6].
U1123	SCP Invalid or Missing Data for Odometer	ABS	REFER to Section 206-09, Inspection and Verification to continue diagnosis.
U1147	SCP Invalid or Missing Data for Vehicle Security	PCM	PERFORM J1850 Communication Network Diagnostics. GO to Communication Network Diagnostics in Section 418-00.
U1180	SCP Invalid or Missing Data for Personalization (Memory) Features	DDM	GO to Section 501-09, Inspection and Verification to continue diagnosis.
U1181	SCP Invalid or Missing Data for Personalization (Memory) Features	DDM	GO to Section 501-09, Inspection and Verification to continue diagnosis.
U1197	SCP Invalid or Missing Data for Door Locks	DDM	GO to Section 501-14B, Inspection and Verification to continue diagnosis.
U1198	SCP Invalid or Missing Data for External Access (Doors)	DDM	GO to Section 501-14B, Inspection and Verification to continue diagnosis.
U1199	SCP Invalid or Missing Data for External Access (Doors)	DDM	GO to Section 417-02, Inspection and Verification to continue diagnosis.
U1211	SCP Invalid or Missing Data for Restraints	DSM	GO to Section 413-08, Inspection and Verification to continue diagnosis.
U1222	SCP Invalid or Missing Data for Interior Lamps	DDM	GO to Section 501-14B, Inspection and Verification to continue diagnosis.

Official Licensed Product

SCIL Parameter Identification (PID) Index

SCIL Parameter Identification Index

PID	Description	Expected Values
CCNTSCI	Number of Continuous DTCs on SCIL	one count per bit
BOO__SCI	Brake Switch Input	ON, OFF
PRK__BRK	Parking Brake Switch Input	ON, OFF
TILT	Steering Column Tilt Switch	SHORT, UP, DOWN, OFF
TELESCP	Steering Column Telescope Switch	SHORT, IN, OUT, OFF
TILTPOS	Tilt Position Sensor	SENSED, notSEN
TELEPOS	Telescope Position Sensor	SENSED, notSEN
TURN__SW	Left and Right Turn Signal Switch	OFF, LEFT, RIGHT, SHORT
LBEAMSW	Low Beam Switch	ON, OFF
HBEAMSW	High Beam Switch	ON, OFF
PARK__SW	Parking Lamp Switch	ON, OFF
LIGHTSN	Ambient Light	DAY, NIGHT
FLASH	Flash to Pass Switch	ON, OFF
FTURN__L	Left and Right Front Turn Lamp	R__OPEN, L__OPEN, L/R__OPEN OK
RTURN__L	Left and Right Rear Turn Lamp	R__OPEN, L__OPEN, L/R__OPEN OK
TAILLMP	Left and Right Tail Lamp	OPEN, OK
LOWBEAM	Low Beam Lamp	R__OPEN, L__OPEN, L/R__OPEN OK
AUTOLMP	Autolamp Switch	ON, OFF

(Continued)

6 Can be purchased as a separate item.

DIAGNOSIS AND TESTING (Continued)

SCIL Parameter Identification Index

PID	Description	Expected Values
ALP__IMP	Autolamp Analog Input	0-100%
DOMESW	Dome Lamp Switch	ACTIVE, notACT
PANLDIM	Panel Dim Intensity Switch	0-100%
HOOD__SW	Hood Ajar Switch	AJAR, CLOSED
DECKLID	Decklid Ajar Switch	AJAR, CLOSED
P__DR__SW	Passenger Door Ajar Switch	AJAR, CLOSED
IGN__KEY	Ignition Key In/Out	IN, OUT
IGN__SCI	Ignition Switch	START, RUN, OFF, ACCSSY
WPPRKSW	Windshield Wiper Park Sense	notPRK, PARKED
NUMKEYS	Number of Ignition Key Codes Supported	BCD (valid range 0-16)
DRLKCYL	Door Lock Cylinder	ON, OFF
ENABLE	PATS System Status	ON, OFF
FAILSAF	PATS System Status	ON, OFF

SCIL Active Command Index

SCIL Active Command Index

Active Command	Display	Action
PID LATCH	PID LATCH	ON, OFF
ONE TOUCH WINDOW DWN & ACCY DELAY	ACCY RLY	ON, OFF
WARNING LAMPS AND CHIME	CHIME	ON, OFF
	ANTI-THEFT	ON, OFF
	AUTOLMP	ON, OFF
	HIGH BEAM	ON, OFF
INTERIOR COURTESY LAMPS	INT LAMPS MIRRORLMP	ON, OFF ON, OFF
DECKLID RELEASE	RELEASE	ON, OFF
TURN SIGNAL AND MARKER LAMPS	LF TURN	ON, OFF
	RF TURN	ON, OFF
	LR TURN	ON, OFF
	RR TURN	ON, OFF
	PARKLAMPS	ON, OFF
HEADLAMP CONTROL	LEFT LOW	ON, OFF
	RIGHT LOW	ON, OFF
	HIGH BEAM	ON, OFF
	DRUN LAMP	ON, OFF
	LF CORNER	ON, OFF
	RF CORNER	ON, OFF
HORN CONTROL	HORN	ON, OFF
BACKLIGHTING INTENSITY	INTENSITY	0%-100%
COURTESY LAMP INTENSITY	INTENSITY	0%-100%
DOOR AJAR SIGNAL	DOOR AJAR	ON, OFF
TRANSMIT SIGNAL COMMAND	TRANSMIT	ON, OFF

(Continued)

DIAGNOSIS AND TESTING (Continued)

SCIL Active Command Index

Active Command	Display	Action
BRAKE SYSTEM	BRK/SHIFT	ON, OFF
	PARK BRK	ON, OFF
STEERING COLUMN CONTROL	TILT UP	ONE SECOND TIME OUT
	TILT DOWN	ONE SECOND TIME OUT
	TELSCP IN	ONE SECOND TIME OUT
	TELSCPOUT	ONE SECOND TIME OUT
KEYCODE ERASE TIME SET	MINUTES	8-63 MINUTES

Symptom Chart

Symptom Chart

Condition	Possible Source	Action
• No Communication With the Steering Column/Ignition/Lighting Control Module	• Steering column/ignition/lighting (SCIL) control module. • Circuitry.	• GO to Pinpoint Test H.
• The Turn Signal Lamps Are Never On — One Or More	• Circuitry. • SCIL module. • Multi-function switch . • Fuse.	• GO to Pinpoint Test W.
• The Hazard Flasher Lamps Are Never On — Turn Signals Are Operative	• SCIL module. • Multi-function switch.	• REPAIR the multi-function switch; REFER to Section 211-05.
• The Individual Cornering Lamp Is Inoperative	• Circuitry open. • Damaged miniature bulb . • SCIL module.	• GO to Pinpoint Test X.
• The Individual Cornering Lamp Is On Continuously	• Circuitry open/shorted. • SCIL module.	• GO to Pinpoint Test Y.

Office Licensed Product Ford Motor Company

Pinpoint Tests

PINPOINT TEST V: DTC B1875: TURN SIGNAL/HAZARD SWITCH SIGNAL CIRCUIT SHORT TO BATTERY

TEST CONDITIONS	TEST DETAILS/RESULTS/ACTIONS
V1 CHECK FOR DTC B1509	
	1 Check the continuous DTCs recorded during Inspection and Verification. • Are both DTCs B1509 and B1875 stored as continuous DTCs? → **Yes** REPAIR circuit 1041 (BR/O). RETEST the system. → **No** GO to **V2**.

(Continued)

DIAGNOSIS AND TESTING (Continued)

PINPOINT TEST V: DTC B1875: TURN SIGNAL/HAZARD SWITCH SIGNAL CIRCUIT SHORT TO BATTERY (Continued)

TEST CONDITIONS	TEST DETAILS/RESULTS/ACTIONS
V2 CHECK TURN__SW PID	
1 SCIL Module PID TURN__SW	• Does PID TURN__SW read OFF? → **Yes** GO to **V3**. → **No** GO to **V4**.
V3 CHECK CIRCUIT 375 (Y/LG) FOR A SHORT TO VOLTAGE	
1 SCIL Module C286 2 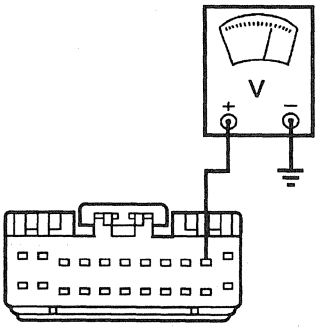 AK1299-A	2 Connect a voltmeter between steering column/ignition/lighting control (SCIL) module C286-10, circuit 375 (Y/LG), and ground. • Is the voltage reading B+? → **Yes** REPAIR circuit 375 (Y/LG). RETEST the system. → **No** REPLACE the SCIL module. RETEST the system.

Official Licensed Product
Ford Motor Company

(Continued)

DIAGNOSIS AND TESTING (Continued)

PINPOINT TEST V: DTC B1875: TURN SIGNAL/HAZARD SWITCH SIGNAL CIRCUIT SHORT TO BATTERY (Continued)

TEST CONDITIONS	TEST DETAILS/RESULTS/ACTIONS
V4 CHECK PID TURN__SW WITH THE MULTI-FUNCTION SWITCH DISCONNECTED	
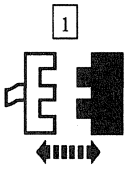 Multi-Function Switch Connector C215 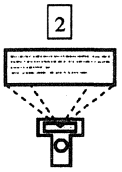 SCIL Module PID TURN__SW	• Does PID TURN__SW read OFF? → **Yes** REPLACE the multi-function switch. REFER to Section 211-05. RETEST the system. → **No** GO to **V5**.
V5 CHECK PID TURN__SW WITH SCIL MODULE DISCONNECTED	
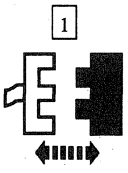 SCIL Module C286 SCIL Module PID TURN__SW	• Does PID TURN__SW read OFF? → **Yes** REPAIR the short between circuit 1041 (BR/O) and circuit 375 (Y/LG). RETEST the system. → **No** REPLACE the SCIL module. RETEST the system.

Official Licensed Product Ford Motor Company

PINPOINT TEST W: THE TURN SIGNAL LAMPS ARE NEVER ON — ONE OR MORE

TEST CONDITIONS	TEST DETAILS/RESULTS/ACTIONS
W1 CHECK ALL TURN SIGNALS	
	[1] Activate the left turn signals.

(Continued)

DIAGNOSIS AND TESTING (Continued)

PINPOINT TEST W: THE TURN SIGNAL LAMPS ARE NEVER ON — ONE OR MORE (Continued)

TEST CONDITIONS	TEST DETAILS/RESULTS/ACTIONS
W1 CHECK ALL TURN SIGNALS (Continued)	
	2 Activate the right turn signals. • Are all turn signals inoperative? → **Yes** GO to **W25**. → **No** GO to **W2**.
W2 CHECK THE LEFT TURN SIGNALS	
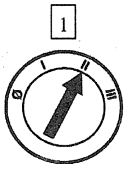	1 Activate the left turn signals. • Are both LH front and rear turn signals inoperative? → **Yes** GO to **W3**. → **No** GO to **W10**.
W3 COMMAND THE LH TURN SIGNAL ON	
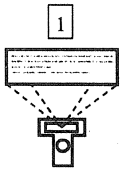 SCIL Module Active Command TURN SIGNAL AND MARKER LAMPS 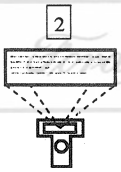 Trigger LF TURN ON	• Does the LH front turn signal lamp turn on? → **Yes** GO to **W4**. → **No** GO to **W5**.

Licensed Product Ford Motor Company

(Continued)

DIAGNOSIS AND TESTING (Continued)

PINPOINT TEST W: THE TURN SIGNAL LAMPS ARE NEVER ON — ONE OR MORE (Continued)

TEST CONDITIONS	TEST DETAILS/RESULTS/ACTIONS
W4 CHECK THE MULTI-FUNCTION SWITCH	
1 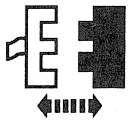 SCIL Module C286 2 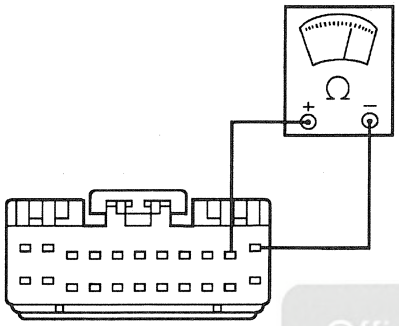 AK1440-A	2 Connect an ohmmeter between steering column/ignition/lighting (SCIL) module C286-11, circuit 1041 (BR/O), and SCIL C286-10, circuit 375 (Y/LG). 3 Actuate the turn signal lever to the LH turn position. • Is the resistance reading between 300-360 ohms? → **Yes** REPLACE the SCIL module. RETEST the system. → **No** REPLACE the multi-function switch. REFER to Section 211-05. RETEST the system.

Official Licensed Product
Ford Motor Company

(Continued)

DIAGNOSIS AND TESTING (Continued)

PINPOINT TEST W: THE TURN SIGNAL LAMPS ARE NEVER ON — ONE OR MORE (Continued)

TEST CONDITIONS	TEST DETAILS/RESULTS/ACTIONS
W5 CHECK FUSE JUNCTION PANEL FUSE 7 (15A)	
1 Fuse Junction Panel Fuse 7 (15A)	• Is the fuse OK? → **Yes** REPAIR circuit 1057 (O/BK). RETEST the system. → **No** GO to **W6**.
W6 CHECK CIRCUIT 1057 (O/BK) FOR A SHORT TO GROUND	
1 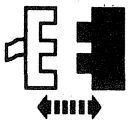 SCIL Module C289 2 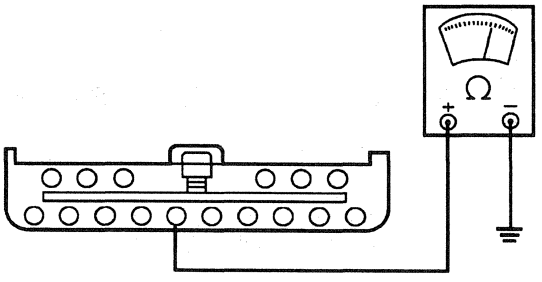 AK1438-A	2 Connect an ohmmeter between SCIL module C289-6, circuit 1057 (O/BK), and ground. • Is the resistance 5 ohms or less? → **Yes** REPAIR circuit 1057 (O/BK). RETEST the system. → **No** GO to **W7**.

Official Licensed Product
Ford Motor Company

(Continued)

DIAGNOSIS AND TESTING (Continued)

PINPOINT TEST W: THE TURN SIGNAL LAMPS ARE NEVER ON — ONE OR MORE (Continued)

TEST CONDITIONS	TEST DETAILS/RESULTS/ACTIONS
W7 CHECK CIRCUIT 380 (P/Y) FOR A SHORT	
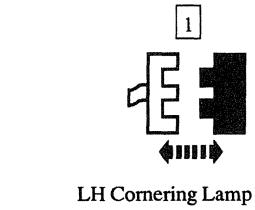 LH Cornering Lamp Bulb 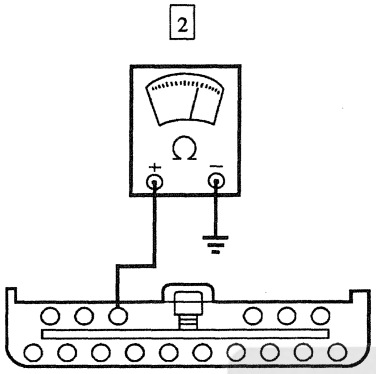 AK1306-A	2 Connect an ohmmeter between SCIL module C289-14, circuit 380 (P/Y), and ground. • Is the voltage reading 10 kohms or less? → **Yes** REPAIR circuit 380 (P/Y). RETEST the system. → **No** GO to **W8**.
W8 CHECK CIRCUIT 3 (LG/W) FOR A SHORT	
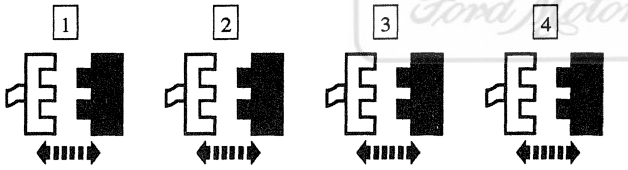 SCIL Module C287 — LH Front Turn Signal Bulb — LH Outside Rear View Mirror C509 — Hybrid Electronic Instrument Cluster C293 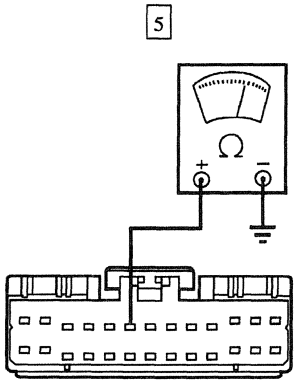 AK1302-A	5 Connect an ohmmeter between SCIL module C287-6, circuit 3 (LG/W), and ground. • Is the voltage reading 10 kohms or less? → **Yes** REPAIR circuit 3 (LG/W). RETEST the system. → **No** GO to **W9**.

Official Licensed Product Ford Motor Company

(Continued)

DIAGNOSIS AND TESTING (Continued)

PINPOINT TEST W: THE TURN SIGNAL LAMPS ARE NEVER ON — ONE OR MORE (Continued)

TEST CONDITIONS	TEST DETAILS/RESULTS/ACTIONS
W9 CHECK CIRCUIT 9 (LG/R) FOR A SHORT TO GROUND	
1 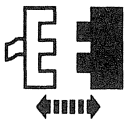 LH Rear Turn Signal Bulb 2 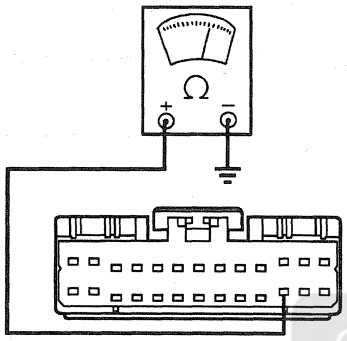 AK1301-A	2 Connect an ohmmeter between SCIL module C287-24, circuit 9 (LG/R), and ground. • Is the voltage reading 10 kohms or less? → **Yes** REPAIR circuit 9 (LG/R). RETEST the system. → **No** REPLACE the SCIL module. RETEST the system.
W10 CHECK THE RIGHT TURN SIGNALS	
1 	1 Activate the right turn signals. • Are both RH front and rear turn signals inoperative? → **Yes** GO to **W11**. → **No** GO to **W18**.

Official Licensed Product
Ford Motor Company

(Continued)

DIAGNOSIS AND TESTING (Continued)

PINPOINT TEST W: THE TURN SIGNAL LAMPS ARE NEVER ON — ONE OR MORE (Continued)

TEST CONDITIONS	TEST DETAILS/RESULTS/ACTIONS
W11 COMMAND THE RH TURN SIGNAL ON	
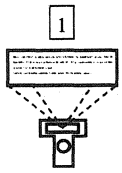 SCIL Module Active Command TURN SIGNAL AND MARKER LAMPS 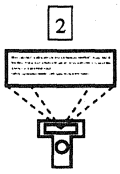 Trigger RF TURN ON	• Does the RH front turn signal lamp turn on? → **Yes** GO to **W12.** → **No** GO to **W13.**
W12 CHECK THE MULTI-FUNCTION SWITCH	
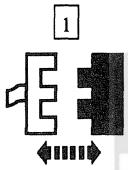 SCIL Module Connector C286 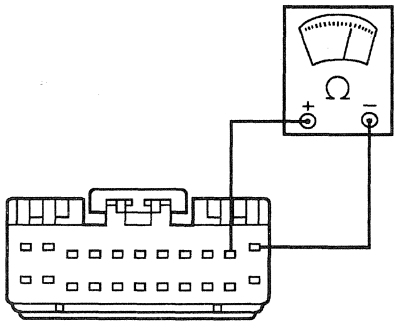 AK1440-A	2 Connect an ohmmeter between SCIL module C286-11, circuit 1041 (BR/O), and Pin C286-10, circuit 375 (Y/LG).

Official Licensed Product
Ford Motor Company

(Continued)

DIAGNOSIS AND TESTING (Continued)

PINPOINT TEST W: THE TURN SIGNAL LAMPS ARE NEVER ON — ONE OR MORE (Continued)

TEST CONDITIONS	TEST DETAILS/RESULTS/ACTIONS
W12 CHECK THE MULTI-FUNCTION SWITCH (Continued)	
	3 Actuate the turn signal lever to the RH turn position. • Is the resistance reading between 2000 - 2400 ohms? → **Yes** REPLACE the SCIL module. RETEST the system. → **No** REPLACE the multi-function switch. REFER to Section 211-05. RETEST the system.
W13 CHECK FUSE 13 (15A)	
1 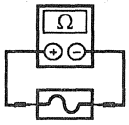 Fuse Junction Panel Fuse 13 (10A)	• Is the fuse OK? → **Yes** REPAIR circuit 1058 (BR/W). RETEST the system. → **No** GO to **W14**.

Official Licensed Product
Ford Motor Company

(Continued)

DIAGNOSIS AND TESTING (Continued)

PINPOINT TEST W: THE TURN SIGNAL LAMPS ARE NEVER ON — ONE OR MORE (Continued)

TEST CONDITIONS	TEST DETAILS/RESULTS/ACTIONS
W14 CHECK CIRCUIT 1058 (BR/W) FOR A SHORT TO GROUND	
1 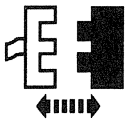 SCIL Module C289 2 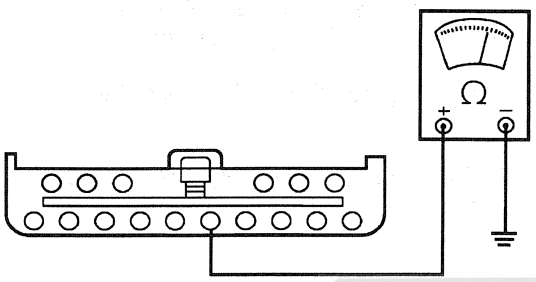 AK1439-A	2 Connect an ohmmeter between SCIL module C289-5, circuit 1058 (BR/W), and ground. • Is the resistance 5 ohms or less? → **Yes** REPAIR circuit 1058 (BR/W). RETEST the system. → **No** GO to **W15**.
W15 CHECK CIRCUIT 379 (BR/W) FOR A SHORT	
1 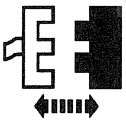 RH Cornering Lamp Bulb 2 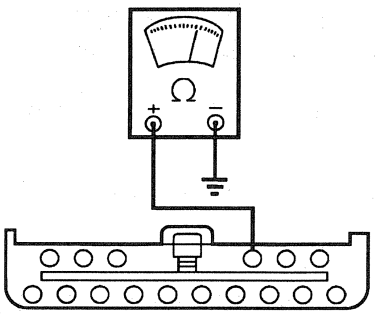 AK1309-A	2 Connect an ohmmeter between SCIL module C289-13, circuit 379 (BR/W), and ground. • Is the voltage reading 10 kohms or less? → **Yes** REPAIR circuit 379 (BR/W). RETEST the system. → **No** GO to **W16**.

Official Licensed Product
Ford Motor Company

(Continued)

DIAGNOSIS AND TESTING (Continued)

PINPOINT TEST W: THE TURN SIGNAL LAMPS ARE NEVER ON — ONE OR MORE (Continued)

TEST CONDITIONS	TEST DETAILS/RESULTS/ACTIONS
W16 CHECK CIRCUIT 2 (W/LB) FOR A SHORT	
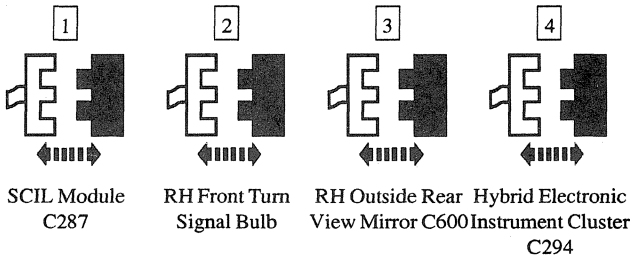 1 SCIL Module C287 2 RH Front Turn Signal Bulb 3 RH Outside Rear View Mirror C600 4 Hybrid Electronic Instrument Cluster C294	
5 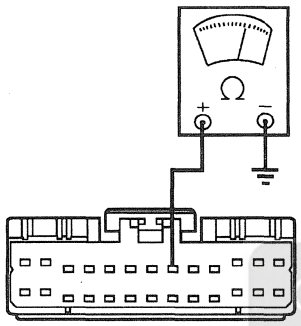 AK1303-A	5 Connect an ohmmeter between SCIL module C287-8, circuit 2 (W/LB), and ground. • Is the voltage reading 10 kohms or less? → **Yes** REPAIR circuit 2 (W/LB). RETEST the system. → **No** GO to **W17**.
W17 CHECK CIRCUIT 5 (O/LB) FOR A SHORT TO GROUND	
1 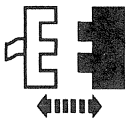 RH Rear Turn Signal Bulb	
2 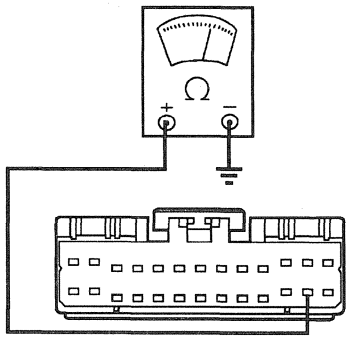 AK1300-A	2 Connect an ohmmeter between SCIL module C287-25, circuit 5 (O/LB), and ground. • Is the voltage reading 10 kohms or less? → **Yes** REPAIR circuit 5 (O/LB). RETEST the system. → **No** REPLACE the SCIL module. RETEST the system.

Official Licensed Product

(Continued)

DIAGNOSIS AND TESTING (Continued)

PINPOINT TEST W: THE TURN SIGNAL LAMPS ARE NEVER ON — ONE OR MORE (Continued)

TEST CONDITIONS	TEST DETAILS/RESULTS/ACTIONS
W18 CHECK THE LH FRONT TURN SIGNALS	
	1 Activate the left turn signals. • Are the LH front turn signals inoperative? → **Yes** GO to **W23**. → **No** GO to **W19**.
W19 CHECK THE LH REAR TURN SIGNALS	
	1 Activate the left turn signals. • Is the LH rear turn signal inoperative? → **Yes** GO to **W22**. → **No** GO to **W20**.
W20 CHECK THE RH REAR TURN SIGNALS	
	1 Activate the right turn signals. • Are the RH front turn signals inoperative? → **Yes** GO to **W24**. → **No** GO to **W21**.

(Continued)

Unauthorized Licensed Product
Ford Motor Company

DIAGNOSIS AND TESTING (Continued)

PINPOINT TEST W: THE TURN SIGNAL LAMPS ARE NEVER ON — ONE OR MORE (Continued)

TEST CONDITIONS	TEST DETAILS/RESULTS/ACTIONS
W21 CHECK CIRCUIT 5 (O/LB) FOR A SHORT TO GROUND	
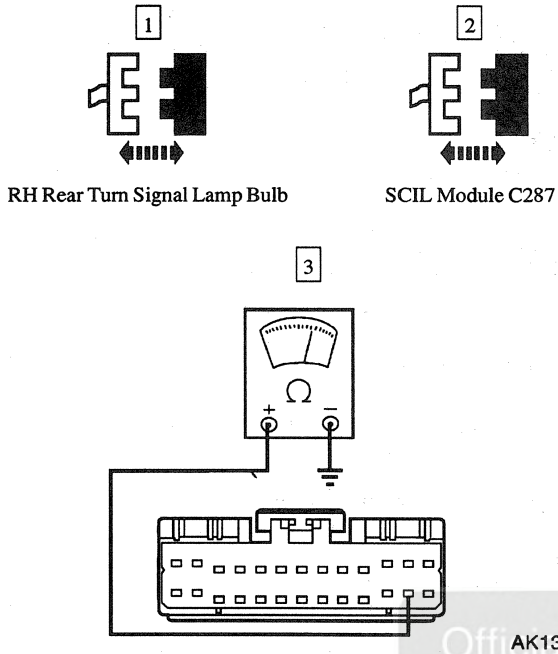	3 Connect an ohmmeter between SCIL module C287-25, circuit 5 (LG/O), and ground. • Is the resistance 10 kohms or less? → **Yes** REPAIR circuit 5 (O/LB). RETEST the system. → **No** REPLACE the SCIL module. RETEST the system.
W22 CHECK CIRCUIT 9 (LG/O) FOR A SHORT TO GROUND	
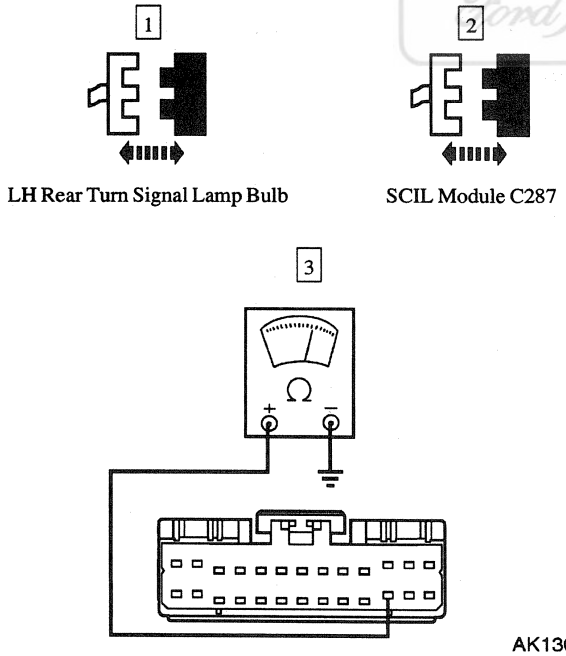	3 Connect an ohmmeter between SCIL module C287-24, circuit 9 (LG/O), and ground. • Is the resistance 10 kohms or less? → **Yes** REPAIR circuit 9 (LG/O). RETEST the system. → **No** REPLACE the SCIL module. RETEST the system.

Official Licensed Product Ford Motor Company

(Continued)

DIAGNOSIS AND TESTING (Continued)

PINPOINT TEST W: THE TURN SIGNAL LAMPS ARE NEVER ON — ONE OR MORE (Continued)

TEST CONDITIONS	TEST DETAILS/RESULTS/ACTIONS
W23 CHECK CIRCUIT 3 (LG/W) FOR A SHORT TO GROUND	
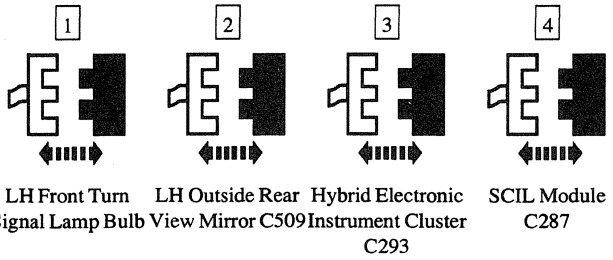 1 LH Front Turn Signal Lamp Bulb 2 LH Outside Rear View Mirror C509 3 Hybrid Electronic Instrument Cluster C293 4 SCIL Module C287 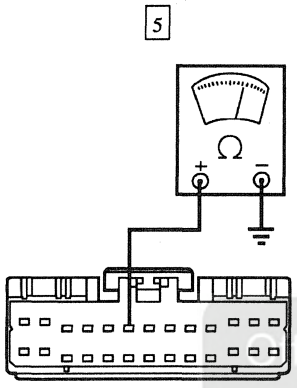 AK1302-A	5 Connect an ohmmeter between SCIL module C287-6, circuit 3 (LG/W), and ground. • Is the resistance 10 kohms or less? → **Yes** REPAIR circuit 3 (LG/W). RETEST the system. → **No** REPLACE the SCIL module. RETEST the system.
W24 CHECK CIRCUIT 2 (W/LB) FOR A SHORT TO GROUND	
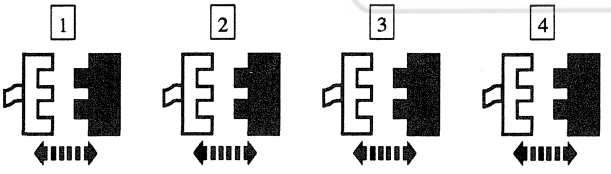 1 RH Front Turn Signal Lamp Bulb 2 RH Outside Rear View Mirror C600 3 Hybrid Electronic Instrument Cluster C294 4 SCIL Module C287 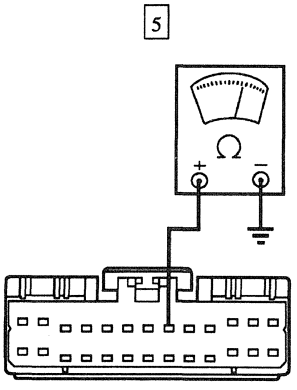 AK1303-A	5 Connect an ohmmeter between SCIL module C287-8, circuit 2 (W/LB), and ground. • Is the resistance 10 kohms or less? → **Yes** REPAIR circuit 2 (W/LB). RETEST the system. → **No** REPLACE the SCIL module. RETEST the system.

(Continued)

Official Licensed Product

DIAGNOSIS AND TESTING (Continued)

PINPOINT TEST W: THE TURN SIGNAL LAMPS ARE NEVER ON — ONE OR MORE (Continued)

TEST CONDITIONS	TEST DETAILS/RESULTS/ACTIONS
W25 CHECK CIRCUIT 1041 (BR/O) FOR VOLTAGE	
1 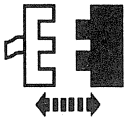 Multi-Function Switch C215 2 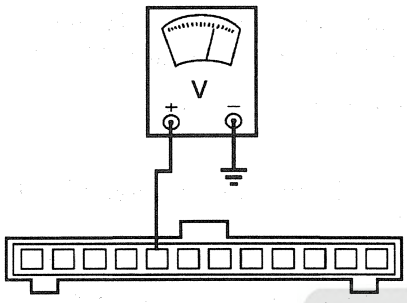 AK1250-A	2 Connect a voltmeter between multi-function switch C215-5, circuit 1041 (BR/O), and ground. • Is the voltage between 4.7 and 5.3 volts? → **Yes** GO to **W28**. → **No** GO to **W26**.
W26 CHECK CIRCUIT 1041 (BR/O) FOR A SHORT TO GROUND	
1 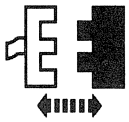 SCIL Module C286 2 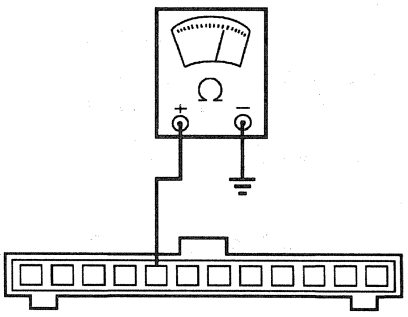 AK1279-A	2 Connect an ohmmeter between multi-function switch C215-5, circuit 1041 (BR/O), and ground. • Is the resistance 10 kohms or less? → **Yes** REPAIR circuit 1041 (BR/O). RETEST the system. → **No** GO to **W27**.

Official Licensed Product
Ford Motor Company

(Continued)

DIAGNOSIS AND TESTING (Continued)

PINPOINT TEST W: THE TURN SIGNAL LAMPS ARE NEVER ON — ONE OR MORE (Continued)

TEST CONDITIONS	TEST DETAILS/RESULTS/ACTIONS
W27 CHECK CIRCUIT 1041 (BR/O) FOR AN OPEN	
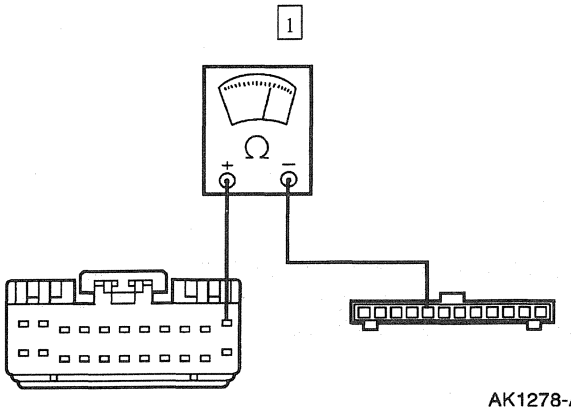 AK1278-A	1 Connect an ohmmeter between SCIL module C286-11 and multi-function switch C215-5, circuit 1041 (BR/O). • Is the resistance 5 ohms or less? → **Yes** REPLACE the SCIL module. RETEST the system. → **No** REPAIR circuit 1041 (BR/O). RETEST the system.
W28 CHECK CIRCUIT 375 (Y/LG) FOR A SHORT TO GROUND	
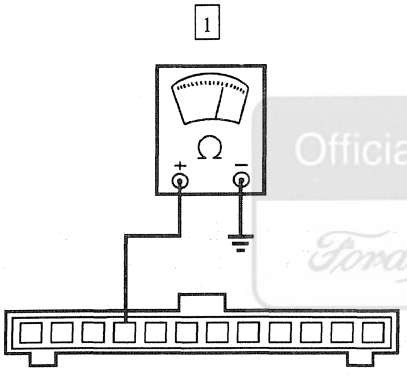 AK1317-A	1 Connect an ohmmeter between multi-function switch C215-4, circuit 375 (Y/LG), and ground. • Is the resistance 10 kohms or less? → **Yes** REPAIR circuit 375 (Y/LG). RETEST the system. → **No** GO to **W29**.
W29 CHECK CIRCUIT 375 (Y/LG) FOR AN OPEN	
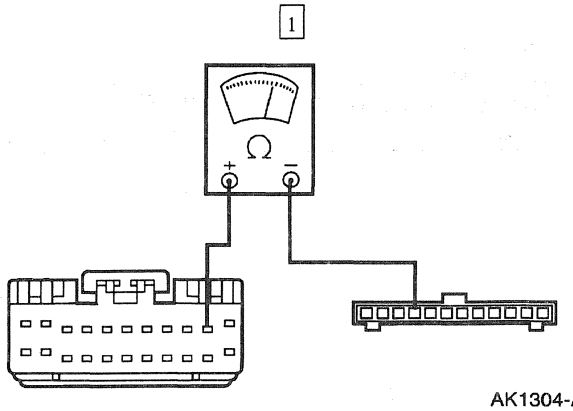 AK1304-A	1 Connect an ohmmeter between SCIL module C286-10 and multi-function switch C215-4, circuit 375 (Y/LG). • Is the resistance 5 ohms or less? → **Yes** GO to **W30**. → **No** REPAIR circuit 375 (Y/LG). RETEST the system.

(Continued)

Official Licensed Product
Ford Motor Company

DIAGNOSIS AND TESTING (Continued)

PINPOINT TEST W: THE TURN SIGNAL LAMPS ARE NEVER ON — ONE OR MORE (Continued)

TEST CONDITIONS	TEST DETAILS/RESULTS/ACTIONS
W30 CHECK THE MULTI-FUNCTION SWITCH	
1 Multi-Function Switch Connector	
2 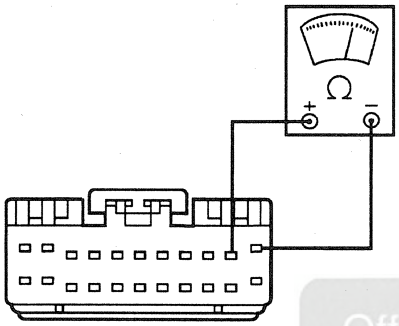 AK1440-A	2 Connect an ohmmeter between SCIL module C286-11, circuit 1041 (BR/O), and SCIL module C286-10, circuit 375 (Y/LG).
	3 Measure the resistance with the multi-function switch in LH turn, RH turn and hazard positions. • Is the resistance between 300 and 360 ohms in LH turn, between 2000 and 2400 ohms in RH turn and greater than 10,000 ohms in hazard? → **Yes** REPLACE the SCIL module. RETEST the system. → **No** REPLACE the multi-function switch. REFER to Section 211-05. RETEST the system.

Official Licensed Product
Ford Motor Company

DIAGNOSIS AND TESTING (Continued)

PINPOINT TEST X: THE INDIVIDUAL CORNERING LAMP IS INOPERATIVE

TEST CONDITIONS	TEST DETAILS/RESULTS/ACTIONS
X1 CHECK TURN SIGNAL OPERATION	
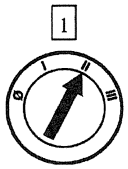	2 Operate the left and right turn signals. • Do the turn signals operate properly? → **Yes** GO to **X2**. → **No** GO to Turn Signal/Cornering/Hazard Lamps.
X2 CHECK THE LH CORNERING LAMPS	
	2 Turn the headlamp switch to the HEAD position. 3 Actuate the multi-function switch to the left turn position. • Does the LH cornering lamp come on? → **Yes** GO to **X8**. → **No** GO to **X3**.

Official Licensed Product
Ford Motor Company

(Continued)

DIAGNOSIS AND TESTING (Continued)

PINPOINT TEST X: THE INDIVIDUAL CORNERING LAMP IS INOPERATIVE (Continued)

TEST CONDITIONS	TEST DETAILS/RESULTS/ACTIONS
X3 COMMAND THE LH FRONT CORNERING LAMP ON	
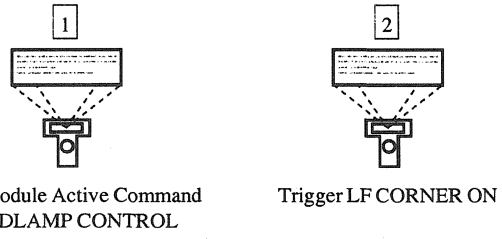 SCIL Module Active Command HEADLAMP CONTROL Trigger LF CORNER ON	• Does the LH cornering lamp come on? → **Yes** REPLACE the steering column/ignition/lighting (SCIL) module. RETEST the system. → **No** TRIGGER LF CORNER OFF. GO to **X4**.
X4 CHECK FOR SUPPLY TO THE LH CORNERING LAMP	
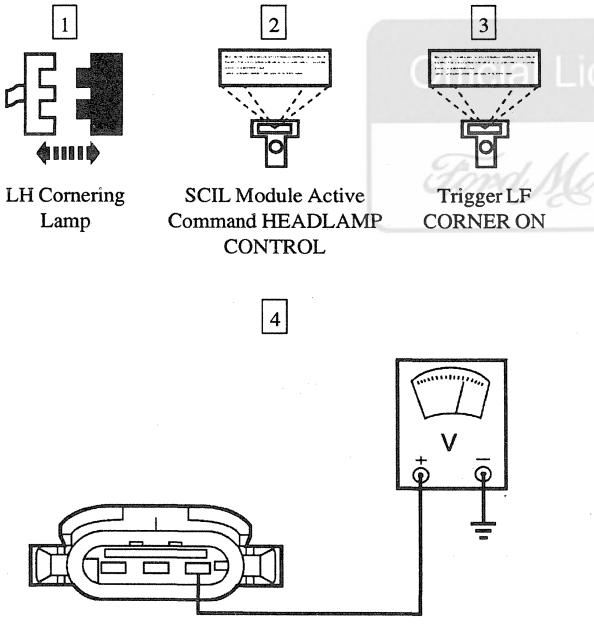 LH Cornering Lamp SCIL Module Active Command HEADLAMP CONTROL Trigger LF CORNER ON AK1305-A	4 Connect a voltmeter between LH cornering lamp connector C107, circuit 380 (P/Y), and ground. • Is the voltage reading B+? → **Yes** TRIGGER LF CORNER OFF. GO to **X7**. → **No** TRIGGER LF CORNER OFF. GO to **X5**.

Ford Licensed Product
Ford Motor Company

(Continued)

DIAGNOSIS AND TESTING (Continued)

PINPOINT TEST X: THE INDIVIDUAL CORNERING LAMP IS INOPERATIVE (Continued)

TEST CONDITIONS	TEST DETAILS/RESULTS/ACTIONS
X5 CHECK CIRCUIT 380 (P/Y) FOR A SHORT TO GROUND	
1 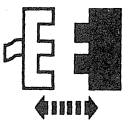 SCIL Module C289 2 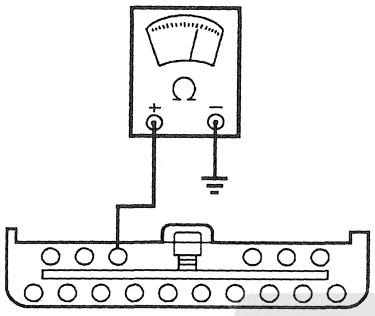 AK1306-A	2 Connect an ohmmeter between SCIL module C289-14, circuit 380 (P/Y), and ground. • Is the resistance 10 kohms or less? → **Yes** REPAIR circuit 380 (P/Y). RETEST the system. → **No** GO to **X6**.
X6 CHECK CIRCUIT 380 (P/Y) FOR AN OPEN	
1 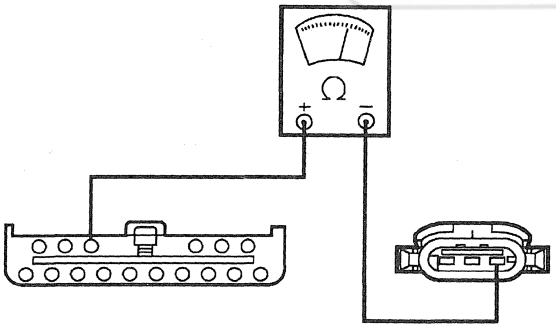 AK1307-A	1 Connect an ohmmeter between SCIL module C289-14, circuit 380 (P/Y), and LH cornering lamp C107, circuit 380 (P/Y). • Is the resistance 5 ohms or less? → **Yes** REPLACE the SCIL module. RETEST the system. → **No** REPAIR circuit 380 (P/Y). RETEST the system.

Official Licensed Product
Ford Motor Company

(Continued)

DIAGNOSIS AND TESTING (Continued)

PINPOINT TEST X: THE INDIVIDUAL CORNERING LAMP IS INOPERATIVE (Continued)

TEST CONDITIONS	TEST DETAILS/RESULTS/ACTIONS
X7 CHECK CIRCUIT 57 (BK) FOR AN OPEN	
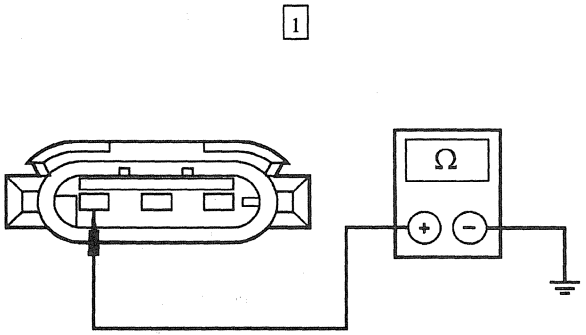 GK6427-A	1 Connect an ohmmeter between LH cornering lamp C107, circuit 57 (BK), and ground. • Is the resistance 5 ohms or less? → **Yes** REPLACE the LH cornering lamp bulb. RETEST the system. → **No** REPAIR circuit 57 (BK). RETEST the system.
X8 COMMAND THE RH FRONT CORNERING LAMP ON	
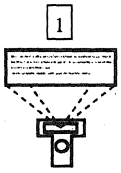 SCIL Module Active Command HEADLAMP CONTROL Trigger RF CORNER ON	• Does the RH cornering lamp come on? → **Yes** REPLACE the SCIL module. RETEST the system. → **No** TRIGGER RF CORNER OFF. GO to **X9**.

Official Licensed Product
Ford Motor Company

(Continued)

DIAGNOSIS AND TESTING (Continued)

PINPOINT TEST X: THE INDIVIDUAL CORNERING LAMP IS INOPERATIVE (Continued)

TEST CONDITIONS	TEST DETAILS/RESULTS/ACTIONS
X9 CHECK FOR SUPPLY TO THE RH CORNERING LAMP	
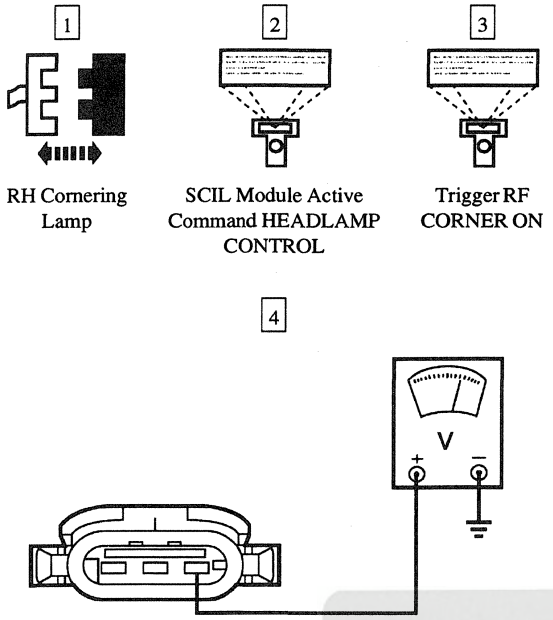	4 Connect a voltmeter to RH cornering lamp C1006, circuit 379 (BR/W). • Is the voltage reading B+? → **Yes** TRIGGER RF CORNER OFF. GO to **X12.** → **No** TRIGGER RF CORNER OFF. GO to **X10.**
X10 CHECK CIRCUIT 379 (BR/W) FOR A SHORT TO GROUND	
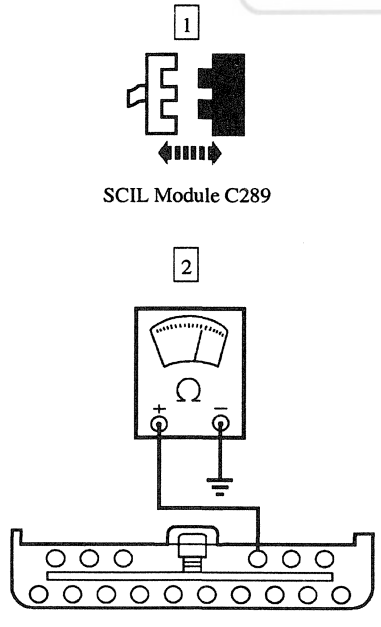	2 Connect an ohmmeter between SCIL module C289-13, circuit 379 (BR/W), and ground. • Is the resistance 10 kohms or less? → **Yes** REPAIR circuit 379 (BR/W). RETEST the system. → **No** GO to **X11.**

Official Licensed Product

(Continued)

DIAGNOSIS AND TESTING (Continued)

PINPOINT TEST X: THE INDIVIDUAL CORNERING LAMP IS INOPERATIVE (Continued)

TEST CONDITIONS	TEST DETAILS/RESULTS/ACTIONS
X11 CHECK CIRCUIT 379 (BR/W) FOR AN OPEN	
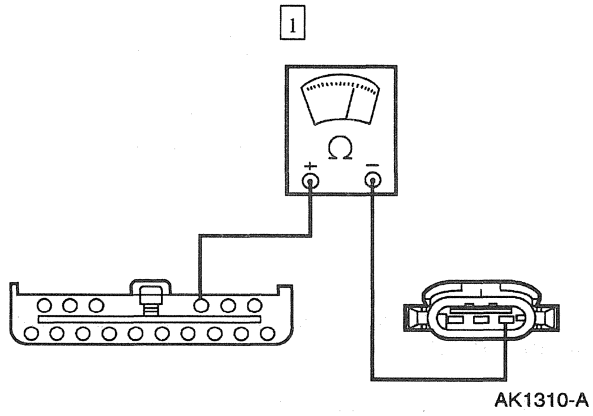 AK1310-A	1 Connect an ohmmeter between SCIL module C289-13, circuit 379 (BR/W), and LH cornering lamp connector C1006, circuit 379 (BR/W). • Is the resistance 5 ohms or less? → **Yes** REPLACE the SCIL module. RETEST the system. → **No** REPAIR circuit 379 (BR/W). RETEST the system.
X12 CHECK CIRCUIT 57 (BK) FOR AN OPEN	
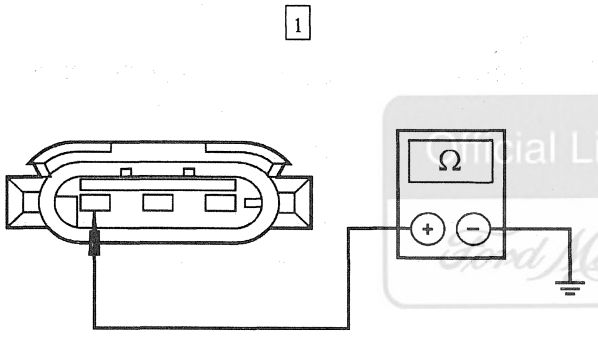 GK6427-A	1 Connect an ohmmeter between RH cornering lamp C1006, circuit 57 (BK), and ground. • Is the resistance 5 ohms or less? → **Yes** REPLACE the RH cornering lamp bulb. RETEST the system. → **No** REPAIR circuit 57 (BK). RETEST the system.

Ford Motor Company Official Licensed Product

PINPOINT TEST Y: THE INDIVIDUAL CORNERING LAMP IS ON CONTINUOUSLY

TEST CONDITIONS	TEST DETAILS/RESULTS/ACTIONS
Y1 CHECK FOR DTC	
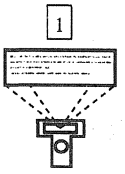 SCIL Module Self-Test	• Are any DTCs retrieved? → **Yes** REPAIR DTCs. GO to SCIL Diagnostic Trouble Code (DTC) Index. → **No** GO to **Y2**.

(Continued)

DIAGNOSIS AND TESTING (Continued)

PINPOINT TEST Y: THE INDIVIDUAL CORNERING LAMP IS ON CONTINUOUSLY (Continued)

TEST CONDITIONS	TEST DETAILS/RESULTS/ACTIONS
Y2 CHECK THE STEERING COLUMN/IGNITION/LIGHTING CONTROL MODULE	
[1] 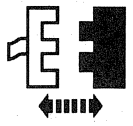 SCIL Module C289	• Does the cornering lamp turn off? → **Yes** REPLACE the SCIL module. RETEST the system. → **No** GO to **Y3**.
Y3 CHECK FOR SHORT TO B+ IN THE LAMP CIRCUIT	
	[1] Make sure the multi-function switch is in the neutral position. • Is the LH cornering lamp always on? → **Yes** REPAIR circuit 380 (P/Y) for a short to B+. RETEST the system. → **No** REPAIR circuit 379 (BR/W) for a short to B+. RETEST the system.

Official Licensed Product
Ford Motor Company

Parking, Rear or License Lamps

Refer to Electrical and Vacuum Troubleshooting Manual, Cell 58, Lighting Control Module for schematic and connector information.

DIAGNOSIS AND TESTING (Continued)

Refer to Electrical and Vacuum Troubleshooting Manual, Cell 92, Exterior Lamps for schematic and connector information.

Special Tool(s)

ST1137-A	73 Digital Multimeter or equivalent 105-R0051
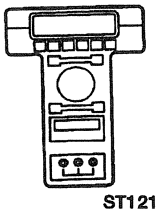 ST1217-A	New Generation STAR (NGS) Tester or equivalent 418-F048 (007-00500)

Inspection and Verification

1. **NOTE:** If the headlamp switch loses power, the steering column/ignition/lighting (SCIL) module will automatically default to the autolamp mode. With the ignition switch in RUN, the autolamp function will turn on the exterior lamps and the instrument panel lighting depending on the input of the light sensor amplifier as in normal operation. However, the exit delay will be defaulted to the full three minutes.

   Verify the customer concern by operating the parking lamps to duplicate the condition.
2. Inspect to determine if one of the following electrical concerns apply:

Visual Inspection Chart

Electrical
• Damaged fuse: Fuse junction panel fuse 31 (10A), 1 (10A), 19 (10A), 12 (15A), 7 (15A), 13 (15A), 25 (10A), 26 (15A) • Circuitry open/shorted • Damaged connector • Miniature bulb burned out • Damaged headlamp switch

3. If the concern remains after the inspection, connect the New Generation STAR (NGS) Tester to the data link connector (DLC) located beneath the instrument panel and select the vehicle to be tested from the NGS menu. If the NGS does not communicate with the vehicle:
   - checked that the program card is properly installed.
   - check the connections to the vehicle.
   - check the ignition switch position.
4. If the NGS still does not communicate with the vehicle, refer to the New Generation STAR Tester manual.
5. Perform the DATA LINK DIAGNOSTIC TEST. If the NGS responds with:
   - CKT914, CKT915 or CKT70 = ALL ECUS NO RESP/NOT EQUIP, refer to Section 418-00.
   - NO RESP/NOT EQUIP for SCIL module, go to Pinpoint Test H.
   - SYSTEM PASSED, retrieve and record the continuous diagnostic trouble codes (DTCs), erase the continuous DTCs and perform self-test diagnostics for the SCIL module.
6. If the DTCs retrieved are related to the concern, go to SCIL Diagnostic Trouble Code (DTC) Index to continue diagnostics.
7. If no DTCs related to the concern are retrieved, proceed to Symptom Chart to continue diagnostics.

SCIL Diagnostic Trouble Code (DTC) Index

SCIL Diagnostic Trouble Code (DTC) Index

DTC	Description	DTC Caused By	Action
C1446	Brake Switch Circuit Failure	SCIL	REFER to Section 206-05.
B1246	Panel Dim Potentiometer Switch Circuit Failure	SCIL	REFER to Section 417-02.

(Continued)

DIAGNOSIS AND TESTING (Continued)

SCIL Diagnostic Trouble Code (DTC) Index

DTC	Description	DTC Caused By	Action
B1312	Lamp Headlamp Input Circuit Short to Battery	SCIL	GO to Pinpoint Test G.
B1334	Luggage Compartment Door Ajar Circuit Short to Ground	SCIL	REFER to Section 417-02.
B1342	ECU is Defective	SCIL	GO to Pinpoint Test A.
B1353	Ignition Key-In Circuit Open	SCIL	REFER to Section 501-12.
B1360	Ignition Run/ACC Circuit Open	SCIL	REFER to Section 501-12.
B1364	Ignition Run/Start Circuit Open	SCIL	REFER to Section 501-12.
B1446	Wiper Park Sense Circuit Failure	SCIL	GO to Pinpoint Test B.
B1485	Brake Pedal Input Short to B+	SCIL	GO to Pinpoint Test R.
B1490	Right Front Door Handle Short to Ground	SCIL	This is an invalid DTC. Do not attempt to repair.
B1498	Luggage Compartment Door Punch Out Sensor Shorted to Ground	SCIL	This is an invalid DTC. Do not attempt to repair.
B1509	Flash-to-Pass Switch Circuit Short to Battery	SCIL	GO to Pinpoint Test C.
B1522	Hood Switch Circuit Short to Ground	SCIL	REFER to Section 419-01A.
B1562	Door Lock Cylinder Circuit Short to Ground	SCIL	REFER to Section 419-01A.
B1566	Door Ajar Circuit Short to Ground	SCIL	REFER to Section 417-02.
B1600	PATS Ignition Key Transponder Signal Is Not Received	SCIL	REFER to Section 419-01B.
B1601	PATS Received Incorrect Key Code From Ignition Key Transponder	SCIL	REFER to Section 419-01B.
B1676	Battery Voltage Out of Range	SCIL	GO to Pinpoint Test D.
B1682	PATS is Disabled (Check Link Between PATS and Transponder)	SCIL	REFER to Section 419-01B.
B1687	Dome Lamp Input Circuit Short to Battery	SCIL	REFER to Section 417-02.
B1689	Autolamp Delay Circuit Failure	SCIL	GO to Pinpoint Test E.
B1796	Headlamp Low Beam Circuit Short to Battery	SCIL	GO to Pinpoint Test G.
B1875	Turn Signal/Hazard Switch Signal Circuit Short to Battery	SCIL	GO to Pinpoint Test V.
B1980	Bulb Outage Condition Detected	SCIL	GO to Pinpoint Test F.
B2328	Steering Column Reach Feedback Potentiometer Circuit Failure	SCIL	REFER to Section 211-05.
B2332	Steering Column Tilt Feedback Potentiometer Circuit Failure	SCIL	REFER to Section 211-05.
B2351	Steering Column Switch Signal Circuit Failure	SCIL	REFER to Section 211-05.
U1027	SCP Invalid or Missing Data for Engine RPM	PCM	REFER to Powertrain Control/Emissions Diagnosis Manual [7].
U1041	SCP Invalid or Missing Data for Vehicle Speed	ABS	REFER to Section 206-09, Inspection and Verification to continue diagnosis.
U1057	SCP Invalid or Missing Data for Vehicle Configuration	SCIL	REFER to Section 501-16, Inspection and Verification to continue diagnosis.

(Continued)

7 Can be purchased as a separate item.

DIAGNOSIS AND TESTING (Continued)

SCIL Diagnostic Trouble Code (DTC) Index

DTC	Description	DTC Caused By	Action
U1059	SCP Invalid or Missing Data for Transmission/Transaxle/PRNDL	PCM	REFER to Powertrain Control/Emissions Diagnosis Manual [8].
U1123	SCP Invalid or Missing Data for Odometer	ABS	REFER to Section 206-09, Inspection and Verification to continue diagnosis.
U1147	SCP Invalid or Missing Data for Vehicle Security	PCM	PERFORM J1850 Communication Network Diagnostics. GO to Communication Network Diagnostics in Section 418-00.
U1180	SCP Invalid or Missing Data for Personalization (Memory) Features	DDM	GO to Section 501-09, Inspection and Verification to continue diagnosis.
U1181	SCP Invalid or Missing Data for Personalization (Memory) Features	DDM	GO to Section 501-09, Inspection and Verification to continue diagnosis.
U1197	SCP Invalid or Missing Data for Door Locks	DDM	GO to Section 501-14B, Inspection and Verification to continue diagnosis.
U1198	SCP Invalid or Missing Data for External Access (Doors)	DDM	GO to Section 501-14B, Inspection and Verification to continue diagnosis.
U1199	SCP Invalid or Missing Data for External Access (Doors)	DDM	GO to Section 417-02, Inspection and Verification to continue diagnosis.
U1211	SCP Invalid or Missing Data for Restraints	DSM	GO to Section 413-08, Inspection and Verification to continue diagnosis.
U1222	SCP Invalid or Missing Data for Interior Lamps	DDM	GO to Section 501-14B, Inspection and Verification to continue diagnosis.

Official Licensed Product

SCIL Parameter Identification (PID) Index

SCIL Parameter Identification Index

PID	Description	Expected Values
CCNTSCI	Number of Continuous DTCs on SCIL	one count per bit
BOO__SCI	Brake Switch Input	ON, OFF
PRK__BRK	Parking Brake Switch Input	ON, OFF
TILT	Steering Column Tilt Switch	SHORT, UP, DOWN, OFF
TELESCP	Steering Column Telescope Switch	SHORT, IN, OUT, OFF
TILTPOS	Tilt Position Sensor	SENSED, notSEN
TELEPOS	Telescope Position Sensor	SENSED, notSEN
TURN__SW	Left and Right Turn Signal Switch	OFF, LEFT, RIGHT, SHORT
LBEAMSW	Low Beam Switch	ON, OFF
HBEAMSW	High Beam Switch	ON, OFF
PARK__SW	Parking Lamp Switch	ON, OFF
LIGHTSN	Ambient Light	DAY, NIGHT
FLASH	Flash to Pass Switch	ON, OFF
FTURN__L	Left and Right Front Turn Lamp	R__OPEN, L__OPEN, L/R__OPEN OK
RTURN__L	Left and Right Rear Turn Lamp	R__OPEN, L__OPEN, L/R__OPEN OK
TAILLMP	Left and Right Tail Lamp	OPEN, OK
LOWBEAM	Low Beam Lamp	R__OPEN, L__OPEN, L/R__OPEN OK
AUTOLMP	Autolamp Switch	ON, OFF

(Continued)

8 Can be purchased as a separate item.

DIAGNOSIS AND TESTING (Continued)

SCIL Parameter Identification Index

PID	Description	Expected Values
ALP__IMP	Autolamp Analog Input	0-100%
DOMESW	Dome Lamp Switch	ACTIVE, notACT
PANLDIM	Panel Dim Intensity Switch	0-100%
HOOD__SW	Hood Ajar Switch	AJAR, CLOSED
DECKLID	Decklid Ajar Switch	AJAR, CLOSED
P__DR__SW	Passenger Door Ajar Switch	AJAR, CLOSED
IGN__KEY	Ignition Key In/Out	IN, OUT
IGN__SCI	Ignition Switch	START, RUN, OFF, ACCSSY
WPPRKSW	Windshield Wiper Park Sense	notPRK, PARKED
NUMKEYS	Number of Ignition Key Codes Supported	BCD (valid range 0-16)
DRLKCYL	Door Lock Cylinder	ON, OFF
ENABLE	PATS System Status	ON, OFF
FAILSAF	PATS System Status	ON, OFF

SCIL Active Command Index

SCIL Active Command Index

Active Command	Display	Action
PID LATCH	PID LATCH	ON, OFF
ONE TOUCH WINDOW DWN & ACCY DELAY	ACCY RLY	ON, OFF
WARNING LAMPS AND CHIME	CHIME	ON, OFF
	ANTI-THEFT	ON, OFF
	AUTOLMP	ON, OFF
	HIGH BEAM	ON, OFF
INTERIOR COURTESY LAMPS	INT LAMPS MIRRORLMP	ON, OFF ON, OFF
DECKLID RELEASE	RELEASE	ON, OFF
TURN SIGNAL AND MARKER LAMPS	LF TURN	ON, OFF
	RF TURN	ON, OFF
	LR TURN	ON, OFF
	RR TURN	ON, OFF
	PARKLAMPS	ON, OFF
HEADLAMP CONTROL	LEFT LOW	ON, OFF
	RIGHT LOW	ON, OFF
	HIGH BEAM	ON, OFF
	DRUN LAMP	ON, OFF
	LF CORNER	ON, OFF
	RF CORNER	ON, OFF
HORN CONTROL	HORN	ON, OFF
BACKLIGHTING INTENSITY	INTENSITY	0%-100%
COURTESY LAMP INTENSITY	INTENSITY	0%-100%
DOOR AJAR SIGNAL	DOOR AJAR	ON, OFF
TRANSMIT SIGNAL COMMAND	TRANSMIT	ON, OFF

(Continued)

DIAGNOSIS AND TESTING (Continued)

SCIL Active Command Index

Active Command	Display	Action
BRAKE SYSTEM	BRK/SHIFT	ON, OFF
	PARK BRK	ON, OFF
STEERING COLUMN CONTROL	TILT UP	ONE SECOND TIME OUT
	TILT DOWN	ONE SECOND TIME OUT
	TELSCP IN	ONE SECOND TIME OUT
	TELSCPOUT	ONE SECOND TIME OUT
KEYCODE ERASE TIME SET	MINUTES	8-63 MINUTES

Symptom Chart

Symptom Chart

Condition	Possible Source	Action
• No Communication With the Steering Column/Ignition/Lighting Control Module	• SCIL module. • Circuitry.	• GO to Pinpoint Test H.
• The Parking Lamps Are Inoperative	• Circuitry. • Headlamp switch. • SCIL module.	• GO to Pinpoint Test Z.
• One Parking Lamp Is Inoperative	• Circuitry. • Bulb.	• REPAIR as required.
• The Parking Lamps Are On Continuously	• SCIL module. • Circuitry. • Headlamp switch.	• GO to Pinpoint Test AA.
• One Marker Lamp Inoperative	• Circuitry. • Bulb.	• REPAIR as required.
• One Rear Lamp Inoperative	• Circuitry. • Bulb.	• REPAIR as required.
• One License Lamp Inoperative	• Circuitry. • Bulb.	• REPAIR as required.

Ford Licensed Product

DIAGNOSIS AND TESTING (Continued)

Pinpoint Tests

PINPOINT TEST Z: THE PARKING LAMPS ARE INOPERATIVE

TEST CONDITIONS	TEST DETAILS/RESULTS/ACTIONS
Z1 CHECK FOR DTC	
1 SCIL Module Self-Test	• Is DTC B1980 retrieved? → **Yes** GO to Pinpoint Test F. → **No** GO to **Z2**.
Z2 CHECK THE TAIL LAMP OPERATION	
	1 Turn the headlamp switch to the PARK position. • Are the tail lamps ON? → **Yes** REPAIR circuit 14 (BR). RETEST the system. → **No** GO to **Z3**.
Z3 CHECK PID PARK__SW	
1 SCIL Module PID PARK__SW	2 Turn the headlamp switch to the PARK position. • Does the PID PARK__SW read ON? → **Yes** GO to **Z7**. → **No** GO to **Z4**.

(Continued)

Official Licensed Product
Ford Motor Company

DIAGNOSIS AND TESTING (Continued)

PINPOINT TEST Z: THE PARKING LAMPS ARE INOPERATIVE (Continued)

TEST CONDITIONS	TEST DETAILS/RESULTS/ACTIONS
Z4 CHECK CIRCUIT 1032 (W/BK) FOR A SHORT TO GROUND	
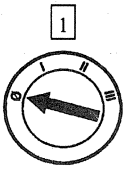 1 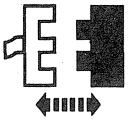 2 Headlamp Switch C262 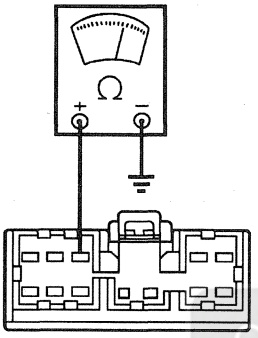 3 AK1311-A	3 Connect an ohmmeter between headlamp switch C262-3, circuit 1032 (W/BK), and ground. • Is the resistance 2000 ohms or less? → **Yes** REPAIR circuit 1032 (W/BK). RETEST the system. → **No** GO to **Z5**.
Z5 CHECK THE HEADLAMP SWITCH	
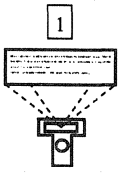 1 SCIL Module PID PARK__SW 2 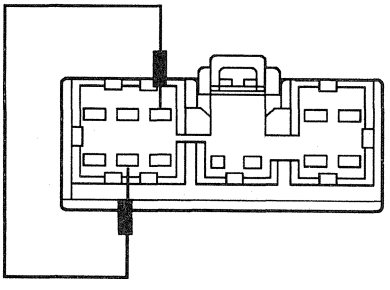 AK1312-A	2 Connect a jumper wire between headlamp switch C262-3, circuit 1032 (W/BK), and headlamp switch C262-7, circuit 1055 (W/LG). • Does the PID PARK__SW read ON? → **Yes** REPLACE the headlamp switch. RETEST the system. → **No** LEAVE the jumper wire connected and GO to **Z6**.

Official Licensed Product
Ford Motor Company

(Continued)

DIAGNOSIS AND TESTING (Continued)

PINPOINT TEST Z: THE PARKING LAMPS ARE INOPERATIVE (Continued)

TEST CONDITIONS	TEST DETAILS/RESULTS/ACTIONS
Z6 CHECK CIRCUIT 1032 (W/BK) FOR AN OPEN	
1 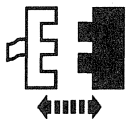 SCIL Module C288 2 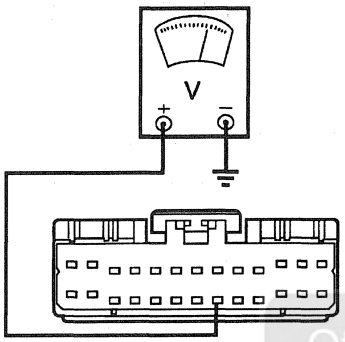 AK1245-A	2 Connect a voltmeter between the SCIL module C288-21, circuit 1032 (W/BK), and ground. • Is the voltage reading B+? → **Yes** REPLACE the SCIL module. RETEST the system. → **No** REPAIR circuit 1032 (W/BK). RETEST the system.
Z7 CHECK THE PARK LAMP SUPPLY	
1 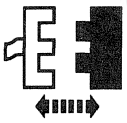 SCIL Module C289 2 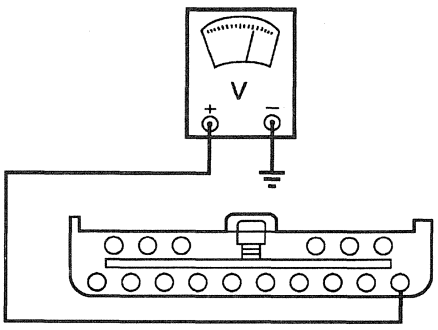 AK1241-A	2 Connect a voltmeter between steering column ignition/lighting control module C289-1, circuit 1046 (T), and ground. • Is the voltage reading B+? → **Yes** GO to **Z10**. → **No** GO to **Z8**.

(Continued)

Official Licensed Product
Ford Motor Company

DIAGNOSIS AND TESTING (Continued)

PINPOINT TEST Z: THE PARKING LAMPS ARE INOPERATIVE (Continued)

TEST CONDITIONS	TEST DETAILS/RESULTS/ACTIONS
Z8 CHECK FUSE JUNCTION PANEL FUSE 31 (10A)	
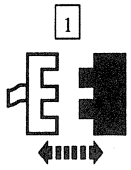 Fuse Junction Panel Fuse 31 (10A) 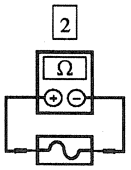 Fuse Junction Panel Fuse 31 (10A)	• Is fuse 31 (10A) OK? → **Yes** REPAIR circuit 1046 (T). RETEST the system. → **No** GO to **Z9**.
Z9 CHECK CIRCUIT 1046 (T) FOR A SHORT TO GROUND	
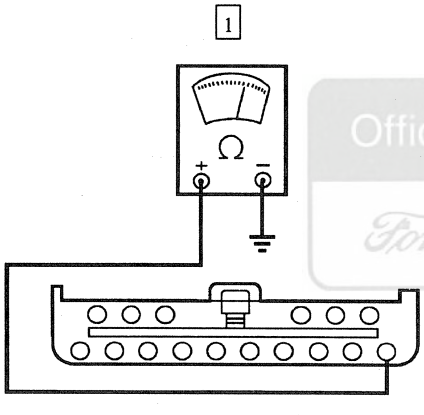 AK1242-A	1 Connect an ohmmeter between SCIL module C289-1, circuit 1046 (T), and ground. • Is the resistance 10 kohms or less? → **Yes** REPAIR circuit 1046 (T). RETEST the system. → **No** GO to **Z10**.

Official Licensed Product
Ford Motor Company

(Continued)

DIAGNOSIS AND TESTING (Continued)

PINPOINT TEST Z: THE PARKING LAMPS ARE INOPERATIVE (Continued)

TEST CONDITIONS	TEST DETAILS/RESULTS/ACTIONS
Z10 CHECK CIRCUIT 109 (P/W) FOR A SHORT TO GROUND	
1 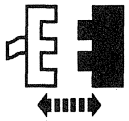 LH and RH Rear Tail Lamp Bulbs 2 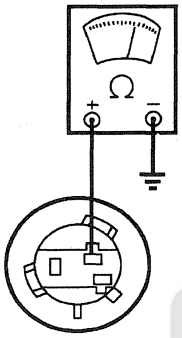 AK1243-A	2 Connect an ohmmeter between LH tail lamp socket C429, circuit 109 (P/W), and ground. • Is the resistance 10 kohms or less? → **Yes** REPAIR circuit 109 (P/W). RETEST the system. → **No** REINSTALL the bulbs. GO to **Z11**.
Z11 CHECK CIRCUIT 14 (BR) FOR A SHORT TO GROUND	
1 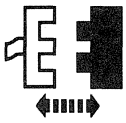 76-Way In-Line Harness 14401 To Harness 14290 C201 2 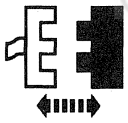 16-Way In-Line Harness 14401 To Harness 14A005 C200 3 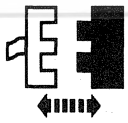 SCIL Module C289 4 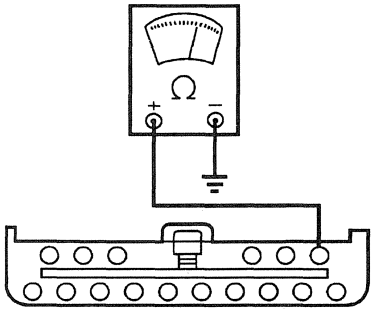 AK1244-A	4 Connect an ohmmeter between SCIL module C289-11, circuit 14 (BR), and ground. • Is the resistance 10 kohms or less? → **Yes** REPAIR circuit 14 (BR) in harness 14401. RETEST the system. → **No** GO to **Z12**.

Official Licensed Product
Ford Motor Company

(Continued)

DIAGNOSIS AND TESTING (Continued)

PINPOINT TEST Z: THE PARKING LAMPS ARE INOPERATIVE (Continued)

TEST CONDITIONS	TEST DETAILS/RESULTS/ACTIONS
Z12 CHECK CIRCUIT 14 (BR) IN THE REAR HARNESS FOR A SHORT TO GROUND	
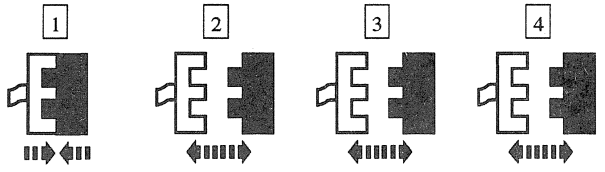 1 16-Way In-Line Harness 14401 To Harness 14A005 C200 2 Rear Neon Ballast C403 3 LH and RH Rear Marker Bulbs 4 LH and RH License Lamp 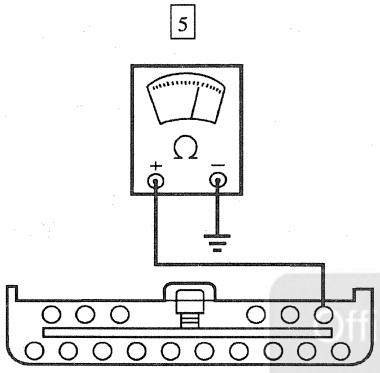 AK1244-A	5 Connect an ohmmeter between SCIL module C289-11, circuit 14 (BR), and ground. • Is the resistance 10 kohms or less? → **Yes** REPAIR circuit 14 (BR) in harness 14A005, 14A227, 13412, RH or LH 13407. RETEST the system. → **No** GO to **Z13**.
Z13 CHECK CIRCUIT 14 (BR) IN THE FRONT HARNESS FOR A SHORT TO GROUND	
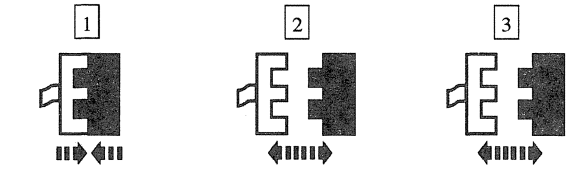 1 76-Way In-Line Harness 14401 To Harness 14290 C201 2 LH and RH Front Marker Bulbs 3 LH and RH Front Park Lamp Bulbs 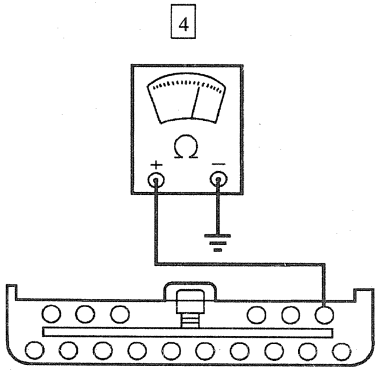 AK1244-A	4 Connect an ohmmeter between SCIL module C289-11, circuit 14 (BR), and ground. • Is the resistance 10 kohms or less? → **Yes** REPAIR circuit 14 (BR) in harness 14290. RETEST the system. → **No** GO to **Z14**.

Official Licensed Product

(Continued)

DIAGNOSIS AND TESTING (Continued)

PINPOINT TEST Z: THE PARKING LAMPS ARE INOPERATIVE (Continued)

TEST CONDITIONS	TEST DETAILS/RESULTS/ACTIONS
Z14 CHECK THE STEERING COLUMN/IGNITION/LIGHTING CONTROL MODULE FOR A SHORT TO GROUND	
1 SCIL Module C289 2 Fuse Junction Panel Fuse 31 (10A)	3 Install the front and rear bulbs removed during testing. Leave the rear neon ballast connector C403 disconnected. 4 Turn the headlamp switch to the PARK position. • Do the park lamps operate properly? → **Yes** REPLACE the rear neon ballast and lamp assembly. RETEST the system. → **No** REPLACE the SCIL module. REPLACE fuse junction panel fuse 31 (10A). RETEST the system.

Official Licensed Product
Ford Motor Company

PINPOINT TEST AA: THE PARKING LAMPS ARE ON CONTINUOUSLY

TEST CONDITIONS	TEST DETAILS/RESULTS/ACTIONS
AA1 CHECK FOR A SHORT TO B+ ON CIRCUIT 14 (BR)	
1 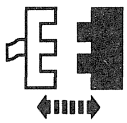 SCIL Module C289	2 Check the parking lamps. • Are the parking lamps ON? → **Yes** REPAIR circuit 14 (BR). RETEST the system. → **No** GO to **AA2**.

(Continued)

DIAGNOSIS AND TESTING (Continued)

PINPOINT TEST AA: THE PARKING LAMPS ARE ON CONTINUOUSLY (Continued)

TEST CONDITIONS	TEST DETAILS/RESULTS/ACTIONS
AA2 CHECK FOR A SHORT TO B+ ON CIRCUIT 109 (P/W)	
	1 Check the tail lamps. • Are the tail lamps ON with the SCIL module disconnected? → **Yes** REPAIR circuit 109 (P/W). RETEST the system. → **No** REPLACE the SCIL module. RETEST the system.

Backup Lamps

Refer to Electrical and Vacuum Troubleshooting Manual, Cell 29, Transmission Controls for schematic and connector information.

Refer to Electrical and Vacuum Troubleshooting Manual, Cell 93, Backup Lamps for schematic and connector information.

Special Tool(s)

ST1137-A	73 Digital Multimeter or equivalent 105-R0051

Inspection and Verification

1. Verify the customer concern by operating the backup lamps to duplicate the condition.
2. Inspect to determine if one of the following electrical concerns apply:

Visual Inspection Chart

Electrical
• Circuitry open/shorted • Damaged fuse junction panel fuse 34 (15A) • Miniature bulb burned out • Damaged transmission range (TR) sensor

3. If the inspection reveals obvious concern(s) that can be readily identified, repair as required.
4. If the concern(s) remains after the inspection, determine the symptom(s) and proceed to Symptom Chart.

Symptom Chart

Symptom Chart

Condition	Possible Source	Action
• The Backup Lamps Are Inoperative	• Circuitry. • Digital transmission range (DTR) sensor. • Fuse.	• GO to Pinpoint Test AB.
• The Individual Backup Lamp Is Inoperative	• Circuitry. • Miniature bulb.	• REPAIR as required.
• The Backup Lamps Are On Continuously	• Circuitry. • DTR sensor.	• GO to Pinpoint Test AC.

Official Licensed Product Ford Motor Co.

DIAGNOSIS AND TESTING (Continued)

Pinpoint Tests

PINPOINT TEST AB: THE BACKUP LAMPS ARE INOPERATIVE

TEST CONDITIONS	TEST DETAILS/RESULTS/ACTIONS
AB1 CHECK CIRCUIT 1040 (R/BK) FOR B+	
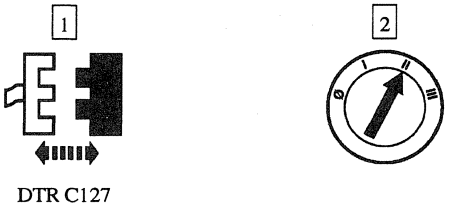 DTR C127 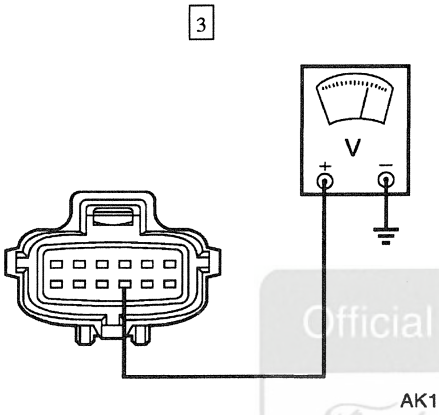 AK1318-A	3 Connect a voltmeter to digital transmission range (DTR) sensor C127-9, circuit 1040 (R/BK). • Is voltage reading B+? → **Yes** GO to **AB5.** → **No** GO to **AB2.**
AB2 CHECK FUSE JUNCTION PANEL FUSE 34 (10A)	
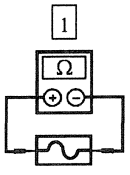 Fuse Junction Panel Fuse 34 (10A)	• Is the fuse OK? → **Yes** REPAIR circuit 1040 (R/BK). RETEST the system. → **No** GO to **AB3.**

Official Licensed Product
Ford Motor Company

(Continued)

DIAGNOSIS AND TESTING (Continued)

PINPOINT TEST AB: THE BACKUP LAMPS ARE INOPERATIVE (Continued)

TEST CONDITIONS	TEST DETAILS/RESULTS/ACTIONS
AB3 CHECK CIRCUIT 1040 (R/BK) FOR A SHORT TO GROUND	
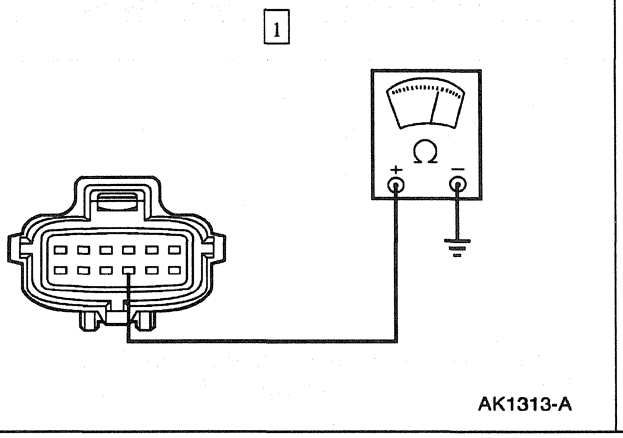 AK1313-A	1 Connect an ohmmeter between DTR sensor C127-9, circuit 1040 (R/BK), and ground. • Is the resistance 10 kohms or less? → **Yes** REPAIR circuit 1040 (R/BK). RETEST the system. → **No** GO to **AB4**.
AB4 CHECK CIRCUIT 140 (BK/PK) FOR A SHORT	
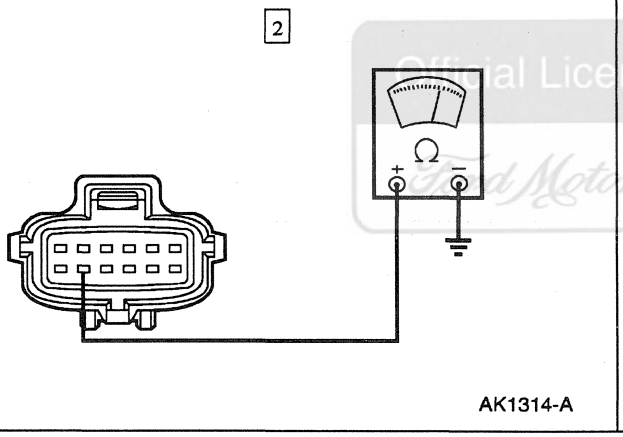 AK1314-A	1 Remove both LH and RH backup lamp bulbs. 2 Connect an ohmmeter between DTR sensor C127-11, circuit 140 (BK/PK), and ground. • Is the resistance 10 kohms or less? → **Yes** REPAIR circuit 140 (BK/PK). RETEST the system. → **No** REPLACE fuse junction panel fuse 34 (10A). RETEST the system.

Official Licensed Product Ford Motor Company

(Continued)

DIAGNOSIS AND TESTING (Continued)

PINPOINT TEST AB: THE BACKUP LAMPS ARE INOPERATIVE (Continued)

TEST CONDITIONS	TEST DETAILS/RESULTS/ACTIONS
AB5 CHECK CIRCUIT 140 (BK/PK) FOR AN OPEN	
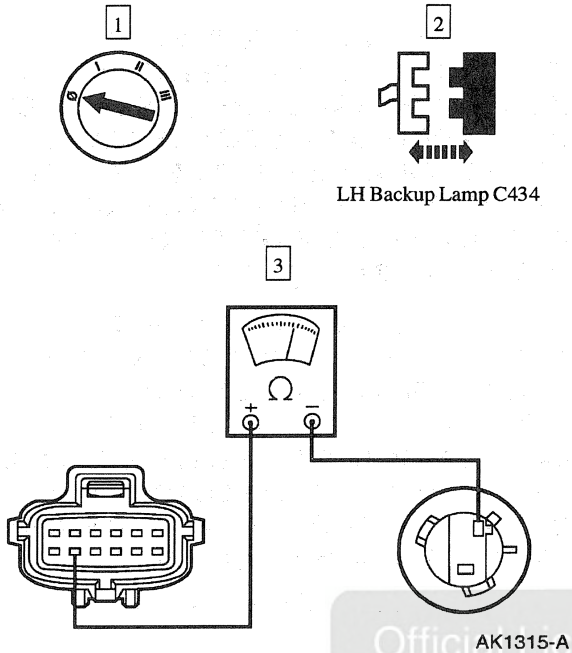	3 Connect an ohmmeter between DTR sensor connector C127-11 and LH backup lamp connector C434, circuit 140 (BK/PK). • Is the resistance 5 ohms or less? → **Yes** CHECK DTR sensor adjustment; REFER to Section 307-01. If the DTR sensor adjustment is within specification, REPLACE the DTR sensor. → **No** REPAIR circuit 140 (BK/PK). RETEST the system.

Officially Licensed Product

PINPOINT TEST AC: THE BACKUP LAMPS ARE ON CONTINUOUSLY

TEST CONDITIONS	TEST DETAILS/RESULTS/ACTIONS
AC1 CHECK TRANSMISSION RANGE (TR) SENSOR	
	• Are the backup lamps still on? → **Yes** REPAIR circuit 140 (BK/PK) for a short to B+. RETEST the system. → **No** CHECK DTR sensor adjustment; REFER to Section 307-01. If the DTR sensor adjustment is within specification, REPLACE the DTR sensor. REFER to Section 307-01. RETEST the system.

REMOVAL AND INSTALLATION

Lamp Assembly — Headlamp

Removal

WARNING: DUE TO THE HIGH OPERATING VOLTAGE OF THE HIGH INTENSITY DISCHARGE (HID) HEADLAMPS AND TO AVOID SERIOUS INJURY, MAKE SURE THE HEADLAMP SWITCH IS IN THE OFF POSITION AND THE BATTERY GROUND CABLE HAS BEEN DISCONNECTED FOR LONGER THAN 30 SECONDS.

WARNING: THE REPLACEABLE HALOGEN HEADLAMP BULB CONTAINS GAS UNDER PRESSURE. THE BULB MAY SHATTER IF THE GLASS ENVELOPE IS SCRATCHED OR IF THE BULB IS DROPPED. GRASP BULB ONLY BY ITS PLASTIC BASE. AVOID TOUCHING GLASS ENVELOPE. KEEP BULB OUT OF REACH OF CHILDREN.

NOTE: Left side shown, right side similar.

Official Licensed Product Ford Motor Company

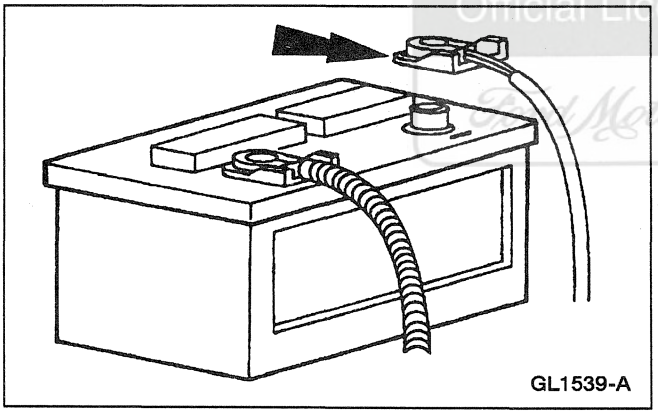
GL1539-A

1. Disconnect the battery ground cable (14301).

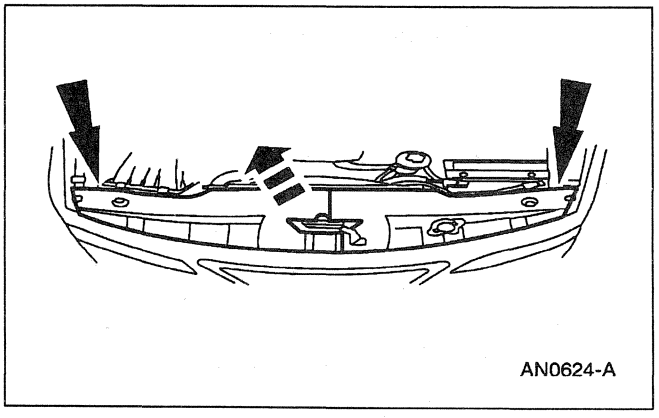
AN0624-A

2. Remove the radiator upper sight shield (8C291).

REMOVAL AND INSTALLATION (Continued)

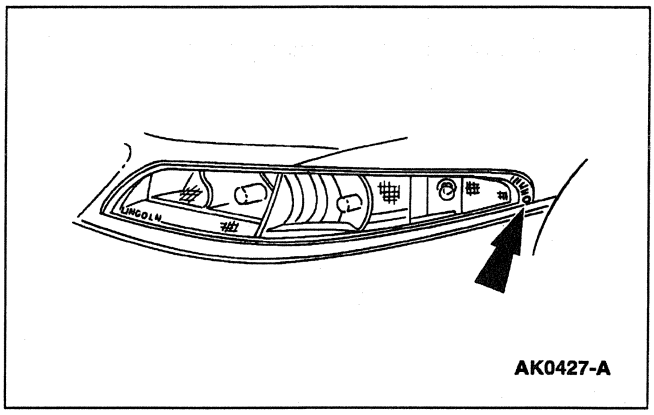

3. Remove the retaining screw from the headlamp (13008).

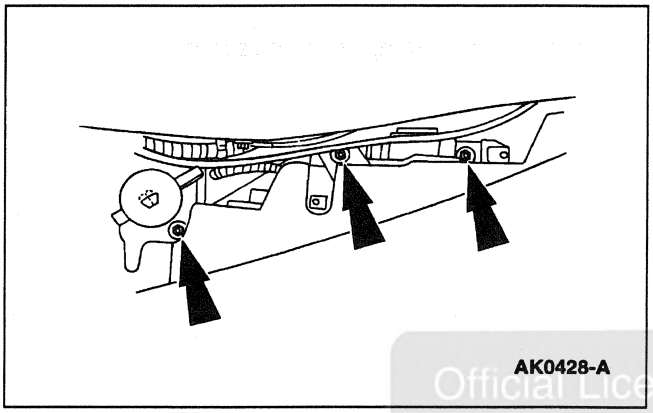

4. Remove the mounting bolts from the headlamp.

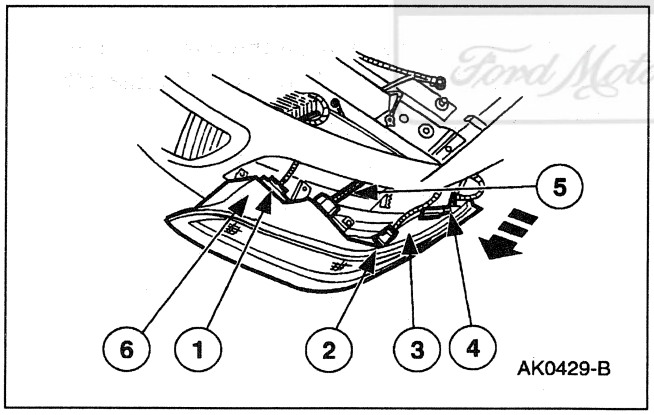

5. Remove the headlamp assembly.
   1 Pull the headlamp assembly forward and disconnect high beam harness.
   2 Disconnect the turn signal harness.
   3 Disconnect the cornering lamp harness.
   4 Disconnect the side marker lamp and harness.
   5 Disconnect the low beam harness.
   6 Remove the headlamp assembly.

Official Licensed Product
Ford Motor Company

Installation

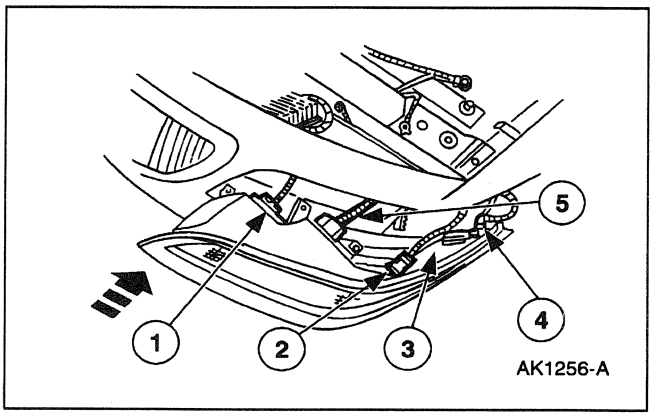

1. Install the headlamp.
   1 Connect the high beam harness.
   2 Connect the turn signal harness.
   3 Connect the cornering lamp harness.
   4 Connect the side marker lamp and harness.
   5 Route the low beam headlamp wiring through the radiator grille opening panel and install the headlamp assembly in place.

REMOVAL AND INSTALLATION (Continued)

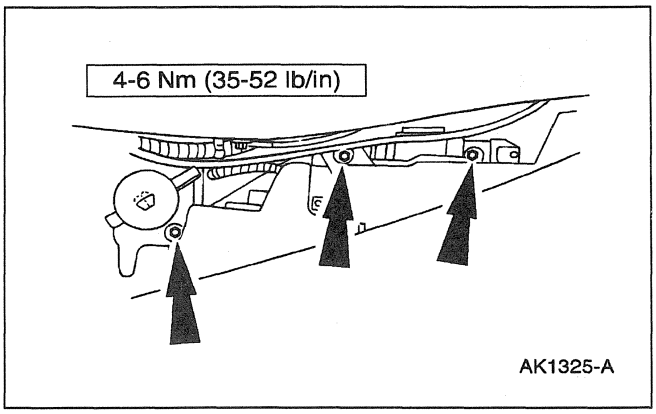

2. Install the headlamp mounting bolts.

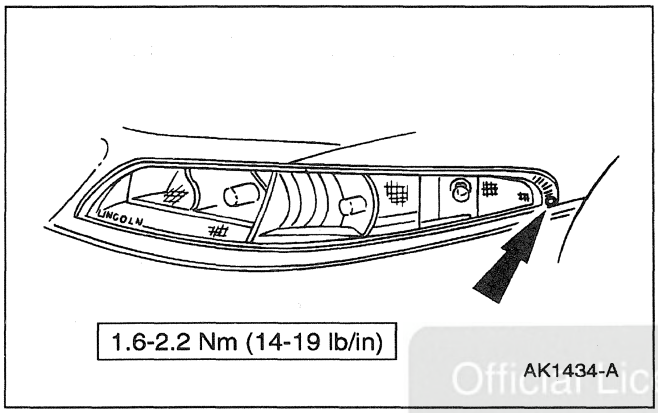

3. Install the headlamp retaining screw.

Official Licensed Product
Ford Motor Company

4. Route the headlamp harness through the same location as the previous harness and connect the connector.

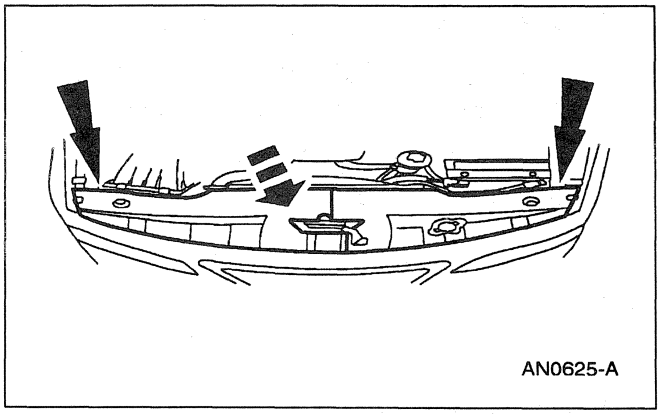

5. Install the radiator upper sight shield.

REMOVAL AND INSTALLATION (Continued)

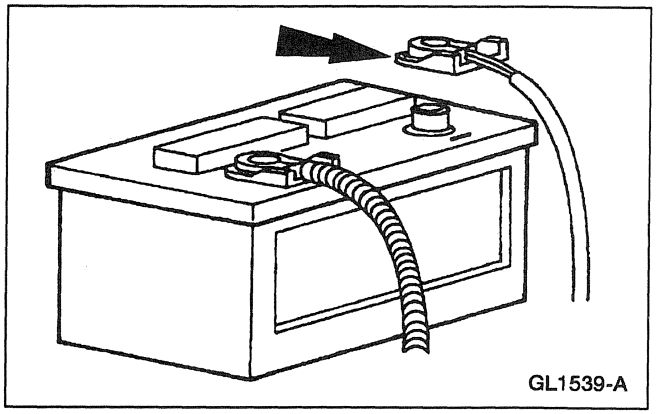

6. NOTE: When the battery (10655) is disconnected and reconnected, some abnormal drive symptoms may occur while the vehicle relearns its adaptive strategy. The vehicle may need to be driven 16 km (10 mi) or more to relearn the strategy.

   Connect the battery ground cable.

Bulb — Headlamp

Removal

WARNING: DUE TO THE HIGH OPERATING VOLTAGE OF THE HIGH INTENSITY DISCHARGE (HID) HEADLAMPS AND TO AVOID SERIOUS INJURY, MAKE SURE THE HEADLAMP SWITCH IS IN THE OFF POSITION AND THE BATTERY GROUND CABLE HAS BEEN DISCONNECTED FOR LONGER THAN 30 SECONDS.

WARNING: THE REPLACEABLE HALOGEN HEADLAMP BULB CONTAINS GAS UNDER PRESSURE. THE BULB MAY SHATTER IF THE GLASS ENVELOPE IS SCRATCHED OR IF THE BULB IS DROPPED. GRASP BULB ONLY BY ITS PLASTIC BASE. AVOID TOUCHING GLASS ENVELOPE. KEEP BULB OUT OF REACH OF CHILDREN.

CAUTION: Due to varying wattage ratings and resulting current draw, certain aftermarket headlamp bulbs may cause the steering column/ignition/lighting (SCIL) module to sense a short resulting in the low beams becoming inoperative. Verify that the headlamp bulbs meet Ford specifications.

1. Remove the headlamp assembly; refer to Lamp Assembly — Headlamp.

Official Licensed Reprint
Ford Motor Company

REMOVAL AND INSTALLATION (Continued)

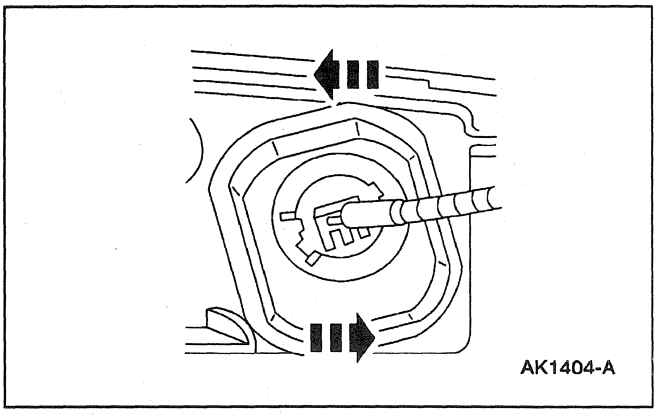

2. Twist the low beam headlamp housing cover counterclockwise and pull it backwards to expose the headlamp bulb retaining nuts.

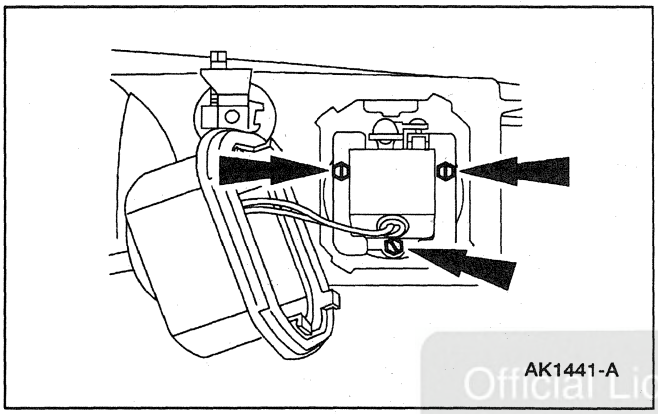

3. Twist the low beam headlamp retaining nuts.

Official Licensed Product
Ford Motor Company

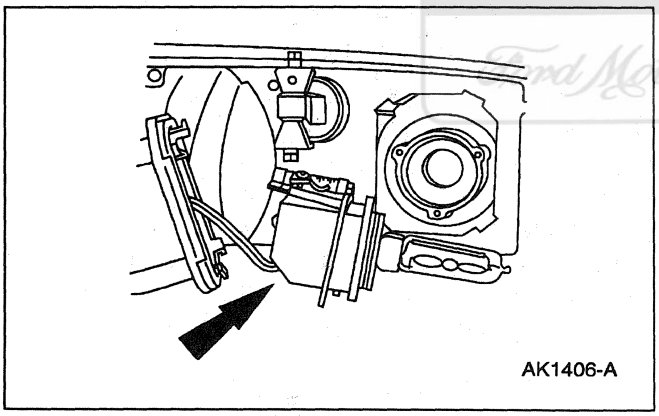

4. Remove the low beam headlamp bulb assembly.

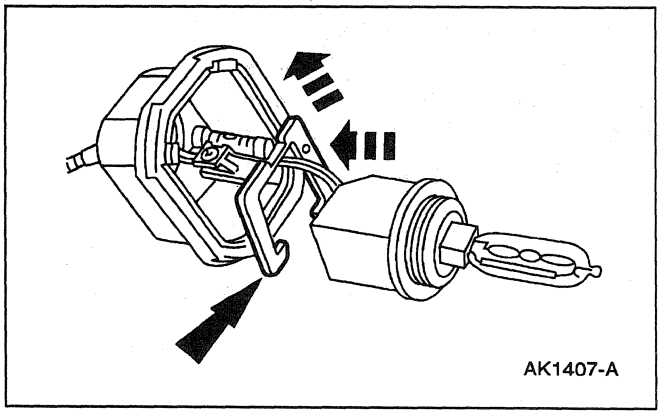

5. Slide the vehicle headlamp aiming device (VHAD) over the low beam headlamp assembly and wiring and remove.

REMOVAL AND INSTALLATION (Continued)

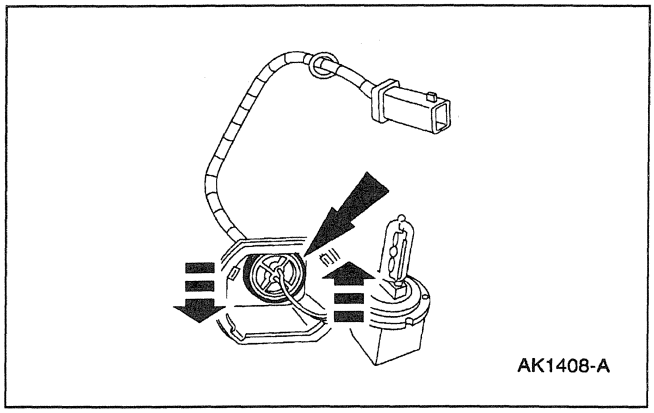

6. Twist the headlamp housing cover harness seal counterclockwise to unlock and separate the low beam headlamp housing cover and low beam headlamp assembly.

Installation

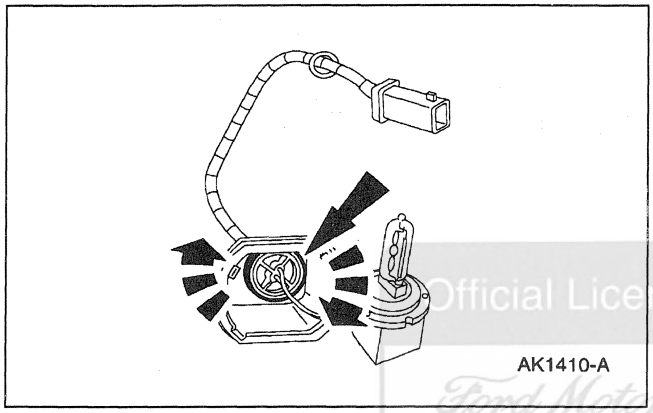

1. Install the low beam headlamp housing cover.
   - Pull the wire harness through the housing cover, then twist the harness seal clockwise to lock into place.

Official Licensed Product
Ford Motor Company

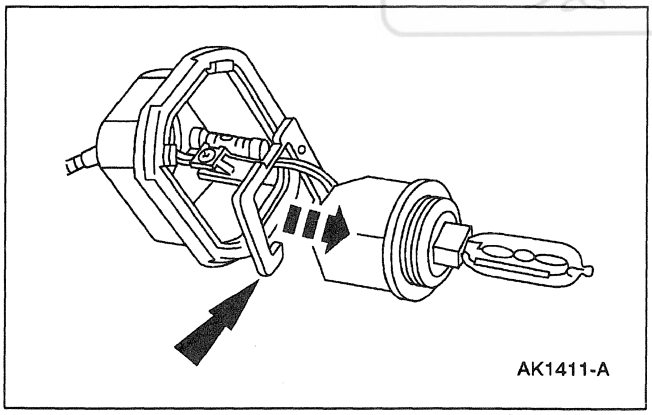

2. Slip the vehicle headlamp aiming device (VHAD) over the low beam headlamp wiring and slide onto the low beam headlamp assembly.

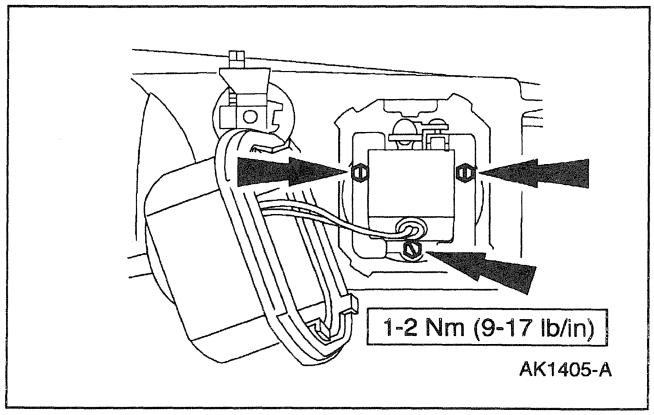

3. Install the low beam headlamp bulb.

REMOVAL AND INSTALLATION (Continued)

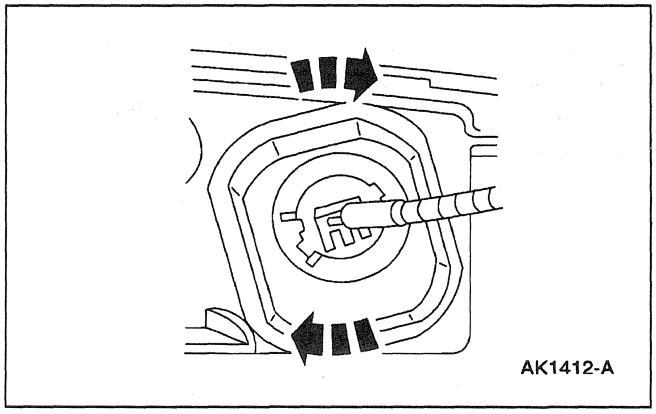

4. Line up the tabs on the low beam headlamp retaining cover and twist the retainer clockwise to the lock position.

5. Install the headlamp (13008); refer to Lamp Assembly — Headlamp.

Lamp Assembly — Stoplamp

Removal

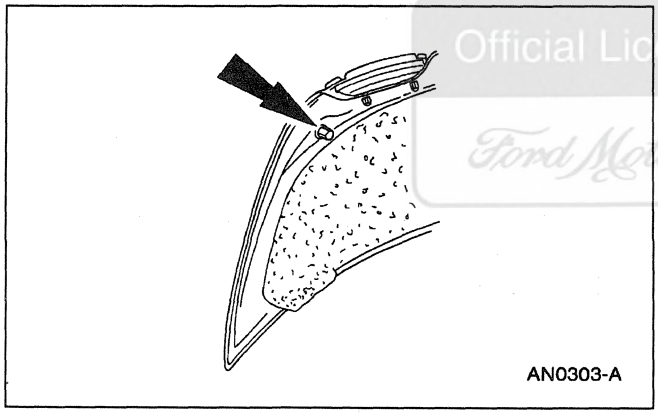

Official Licensed Product
Ford Motor Company

1. Position aside the luggage compartment carpet.

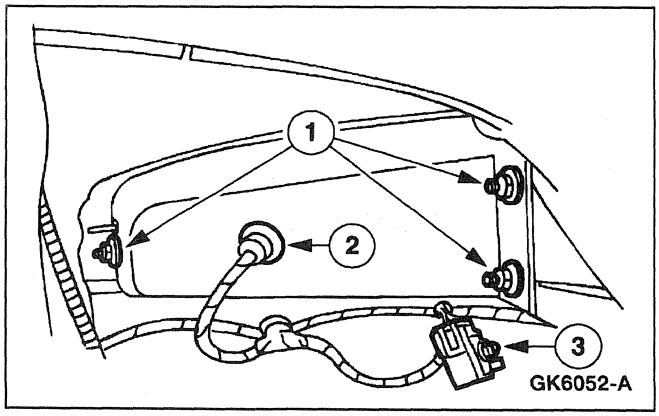

2. Disconnect the stoplamp assembly.
   1 Remove the retaining nuts.
   2 Push the rubber grommet through the sheet metal.
   3 Disconnect the stoplamp assembly.

REMOVAL AND INSTALLATION (Continued)

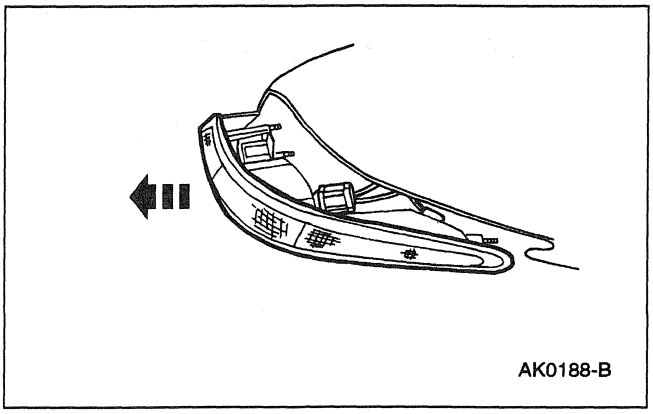

3. Remove the stoplamp assembly.

Installation

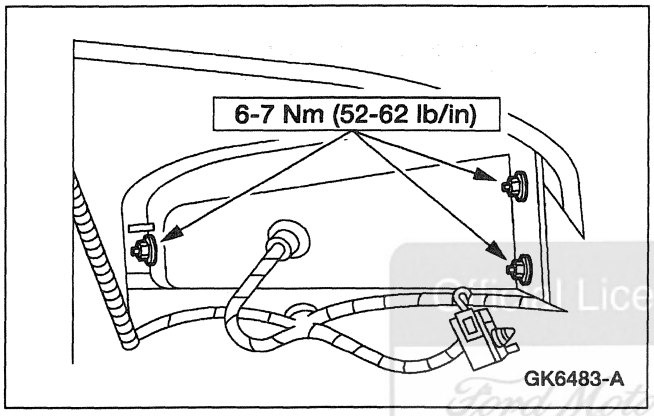

1. To install, reverse the removal procedure.

Official Licensed Product
Ford Motor Company

Lamp Assembly — Hi-Mount Lamp

Removal

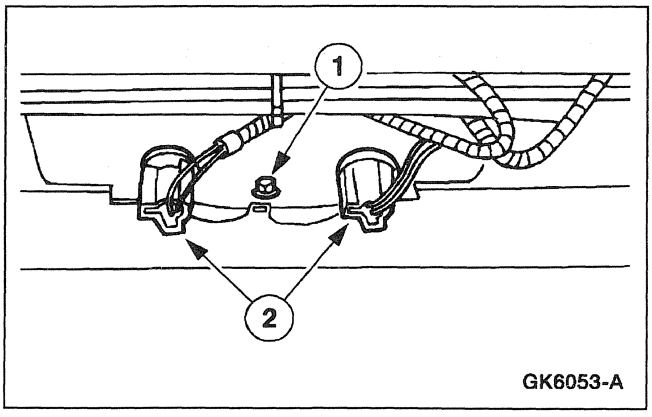

1. From inside the luggage compartment, disconnect the hi-mount lamp sockets.
   1 Remove the bolt.
   2 Disconnect the hi-mount lamp sockets.

REMOVAL AND INSTALLATION (Continued)

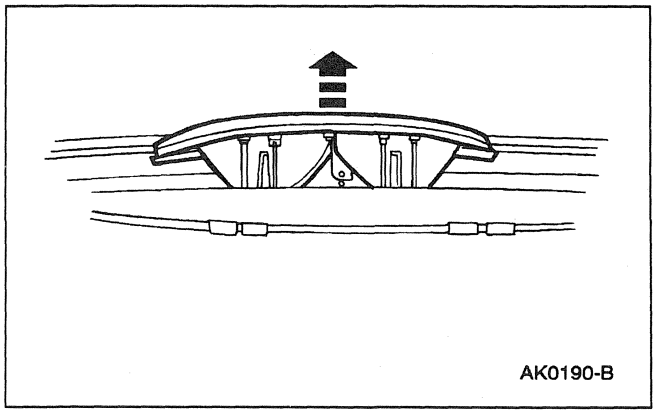

2. Remove the hi-mount lamp assembly.

Installation

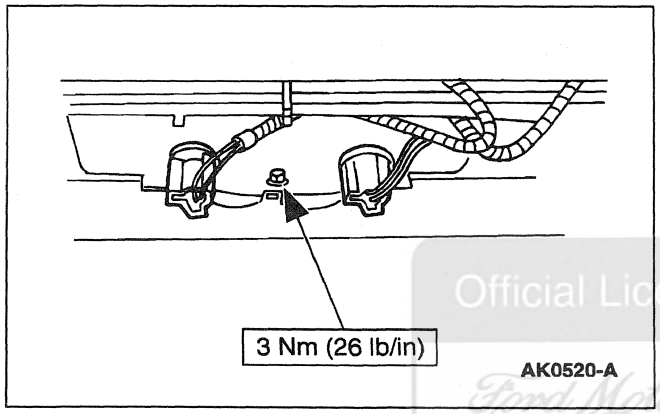

1. To install, reverse the removal procedure.

Official Licensed Product
Ford Motor Company

Lamp Assembly — Rear Lamp

Removal

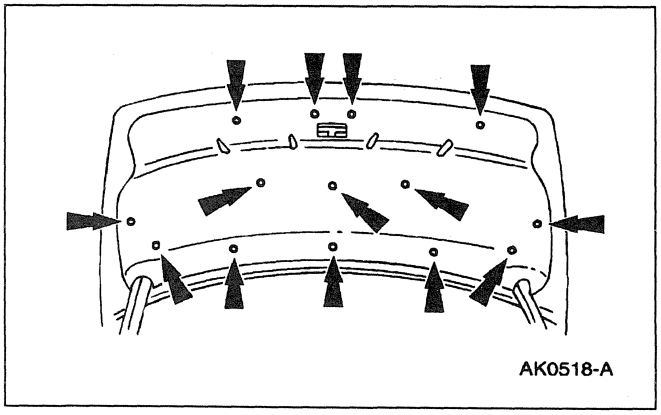

1. Remove the pushpins and the luggage compartment door trim panel.

REMOVAL AND INSTALLATION (Continued)

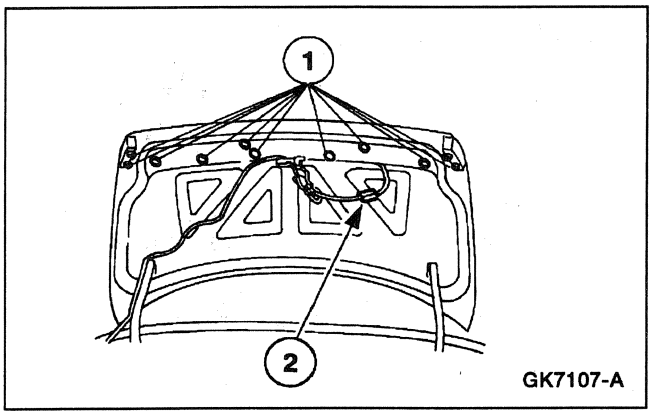

2. Disconnect the rear lamp assembly
   1 Remove the retaining nuts.
   2 Disconnect the electrical connector.

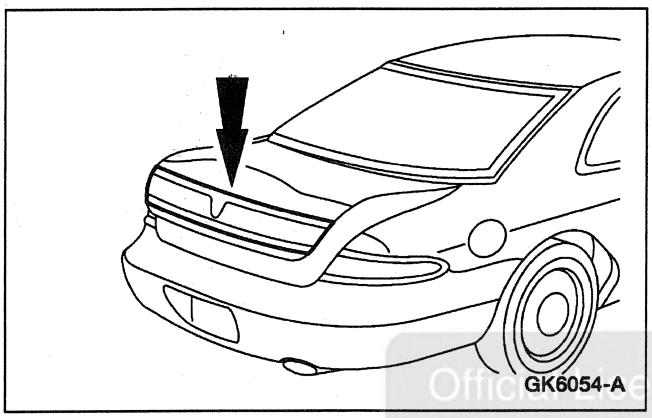

3. Remove the rear lamp assembly.

Official Licensed Product
Ford Motor Company

Installation

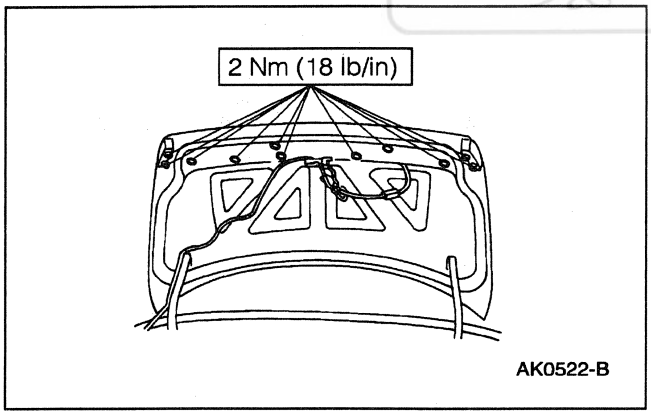

1. To install, reverse the removal procedure.

REMOVAL AND INSTALLATION (Continued)

Lamp Switch — Headlamp

Removal

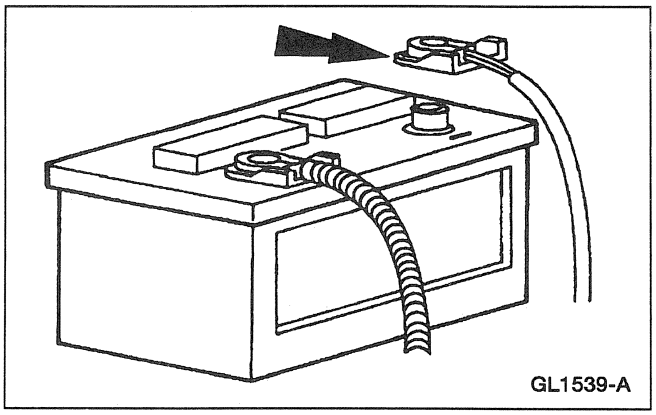

1. **NOTE:** Move the steering column to the full out and down position before disconnecting the battery.

   Disconnect the battery ground cable.

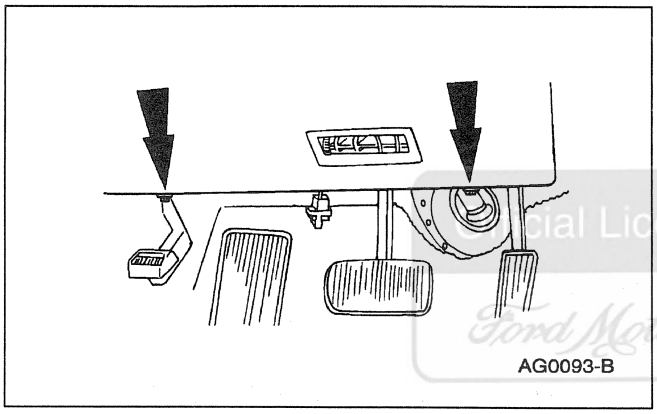

2. Remove the screws and remove the lower steering column cover.

Official Licensed Product
Ford Motor Company

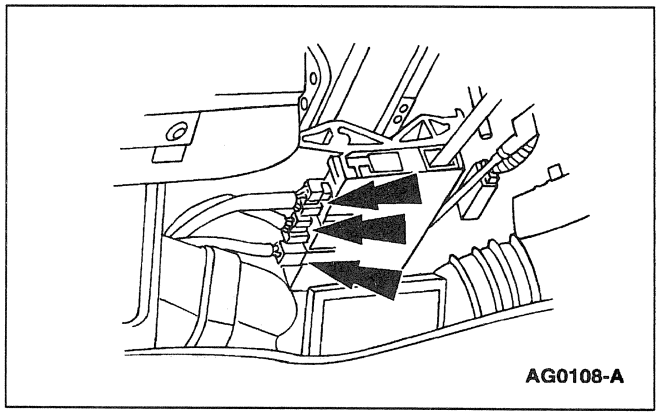

3. Disconnect the steering column connectors.

REMOVAL AND INSTALLATION (Continued)

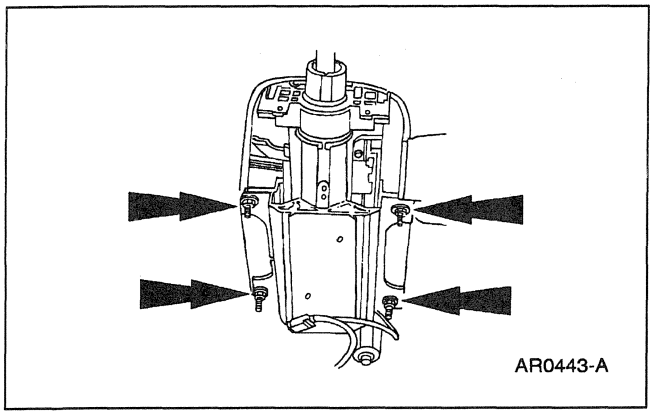
AR0443-A

4. Remove the nuts and lower the steering column.

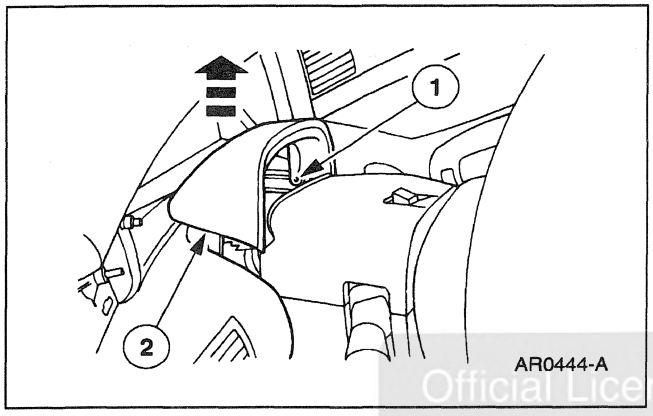

AR0444-A

5. Remove the steering column cover.
   1 Remove the two screws.
   2 Remove the steering column cover.

Official Licensed Product
Ford Motor Company

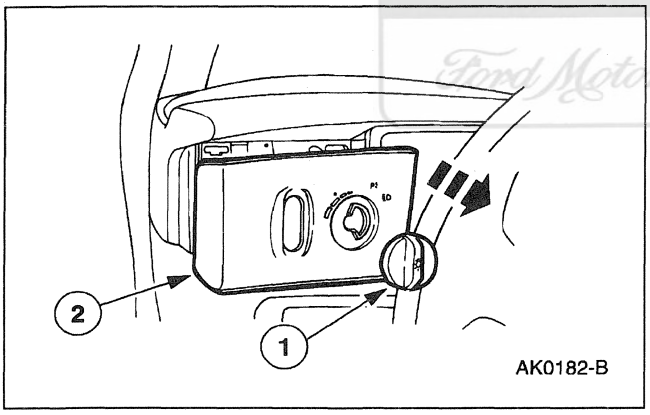

AK0182-B

6. Remove the headlamp switch finish panel.
   1 Remove the headlamp switch knob.
   2 Remove the headlamp switch finish panel.

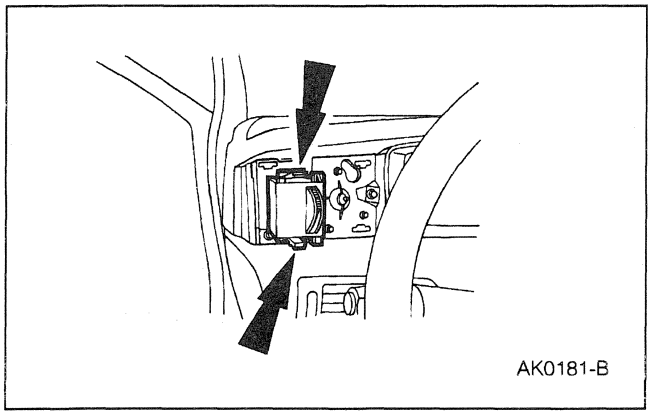
AK0181-B

7. Remove and disconnect the dimmer switch.

REMOVAL AND INSTALLATION (Continued)

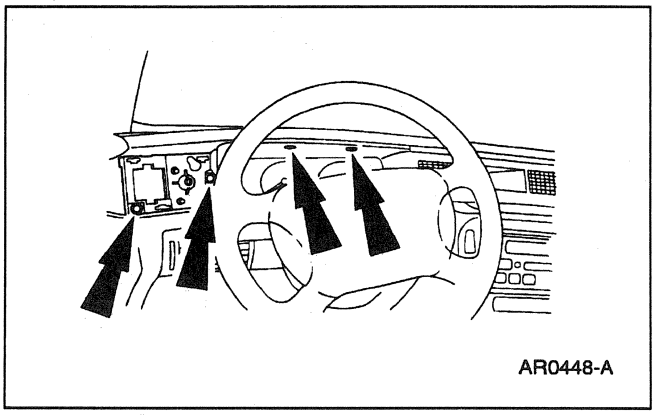
AR0448-A

8. Remove the instrument cluster finish panel screws.

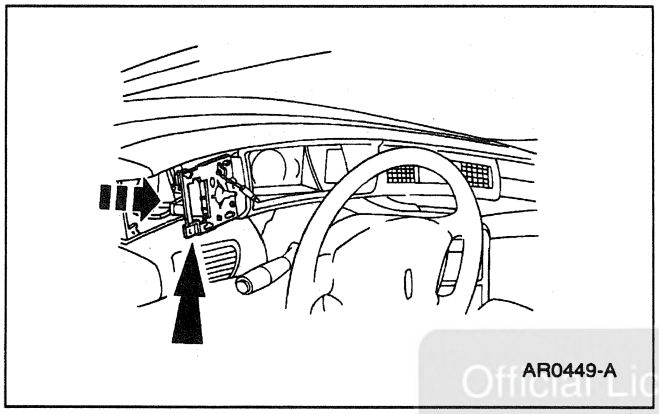
AR0449-A

9. Disconnect the headlamp switch and remove the instrument cluster finish panel.

Official Licensed Product
Ford Motor Company

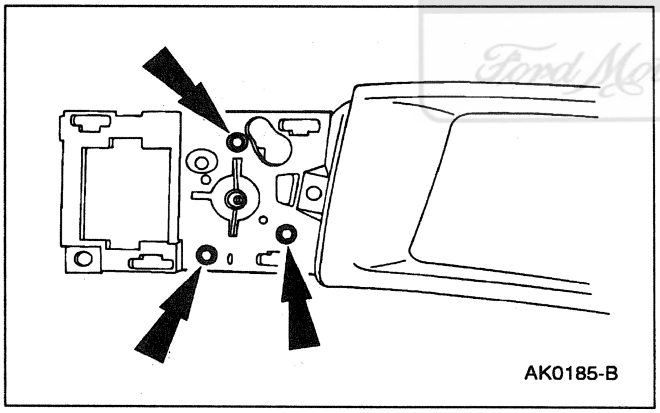
AK0185-B

10. Remove the headlamp switch mounting screws and remove the headlamp switch.

Installation

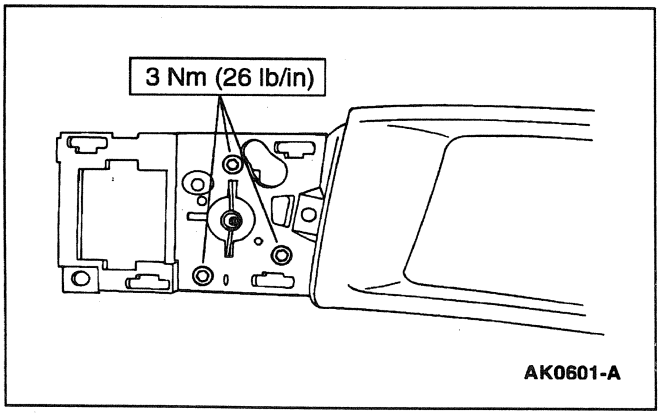

AK0601-A

1. **NOTE:** When the battery (10655) is disconnected and reconnected, some abnormal drive symptoms may occur while the vehicle relearns its adaptive strategy. The vehicle may need to be driven 16 km (10 mi) or more to relearn the strategy.

   To install, reverse the removal procedure.

REMOVAL AND INSTALLATION (Continued)

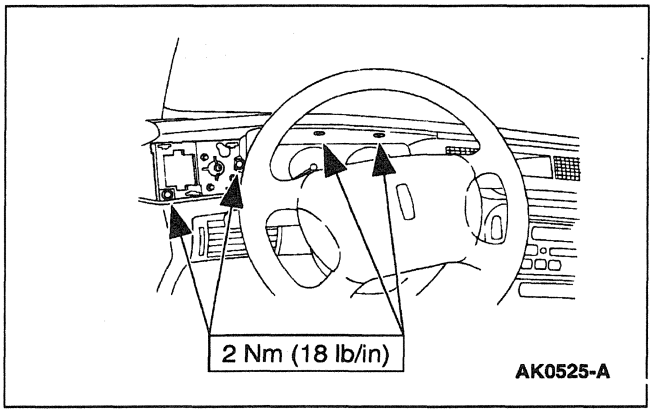

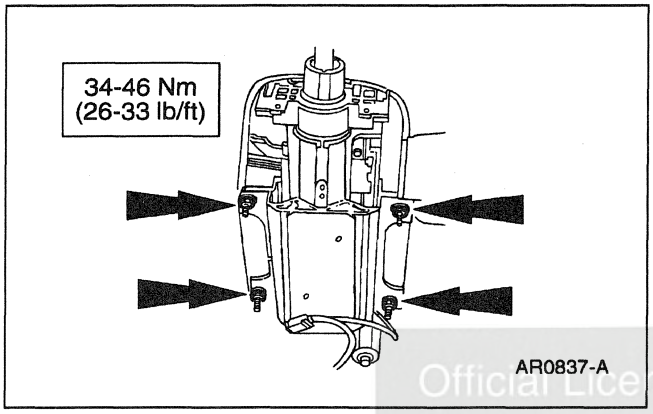

Official Licensed Product
Ford Motor Company

Lamp Switch — Brake Pedal Position

Removal

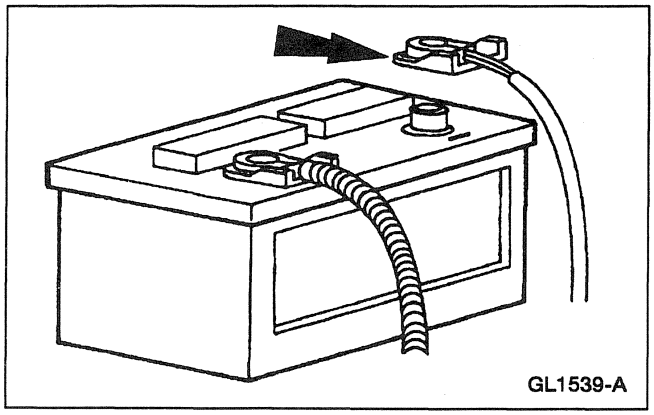

1. Disconnect the battery ground cable.

REMOVAL AND INSTALLATION (Continued)

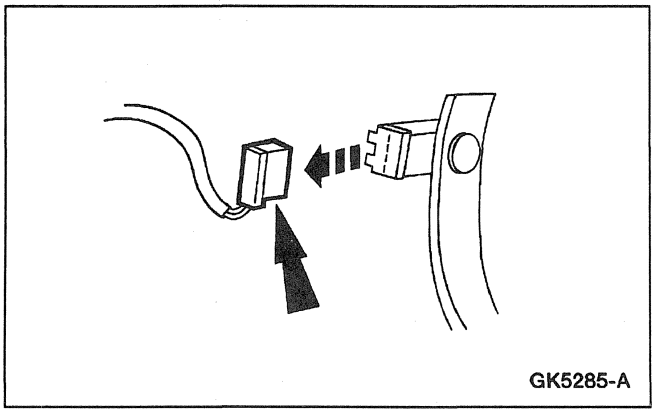

2. Disconnect the electrical connector.

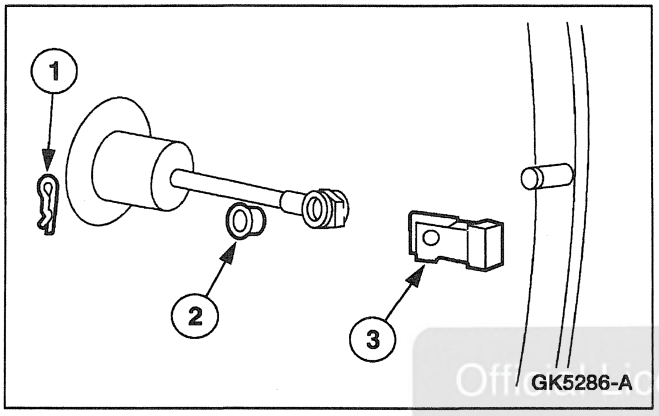

3. Remove the brake pedal position switch.
   1 Remove the hair pin.
   2 Remove the nylon washer.
   3 Remove the brake pedal position switch.

Official Licensed Product
Ford Motor Company

Installation

1. **NOTE:** When the battery (10655) is disconnected and reconnected, some abnormal drive symptoms may occur while the vehicle relearns its adaptive strategy. The vehicle may need to be driven 16 km (10 mi) or more to relearn the strategy.

   To install, reverse the removal procedure.

REMOVAL AND INSTALLATION (Continued)

Photocell/Amplifier

Removal

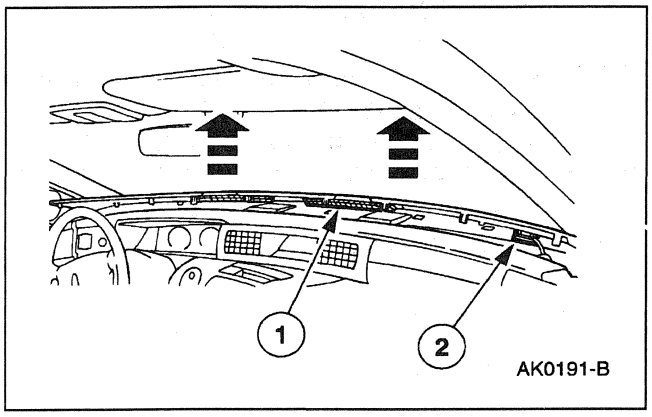

1. Remove the instrument panel defroster grill.
   1 Position aside the instrument panel defroster grill.
   2 Disconnect the A/C sunload sensor connector and remove the instrument panel defroster grill.

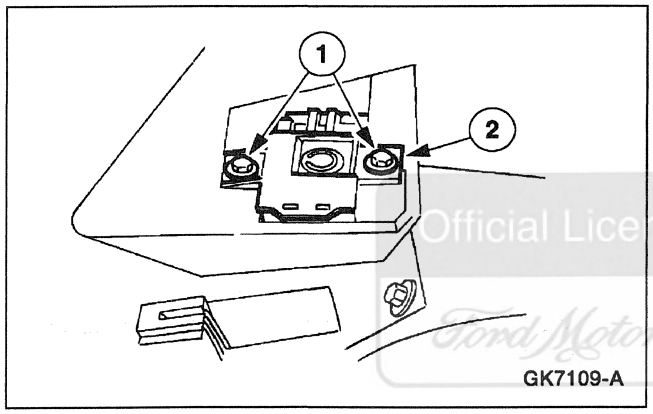

2. Remove the light sensor amplifier.
   1 Remove the retaining screws.
   2 Disconnect and remove the light sensor amplifier.

Official Licensed Product
Ford Motor Company

Installation

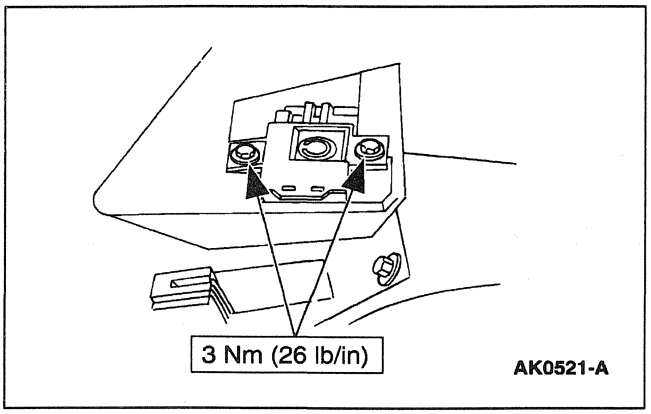

1. To install, reverse the removal procedure.

REMOVAL AND INSTALLATION (Continued)

Ballast — Low Beam Headlamp Bulb

Removal

⚠ WARNING: DUE TO THE HIGH OPERATING VOLTAGE OF THE HIGH INTENSITY DISCHARGE (HID) HEADLAMPS AND TO AVOID SERIOUS INJURY, MAKE SURE THE HEADLAMP SWITCH IS IN THE OFF POSITION AND THE BATTERY GROUND CABLE HAS BEEN DISCONNECTED FOR LONGER THAN 30 SECONDS.

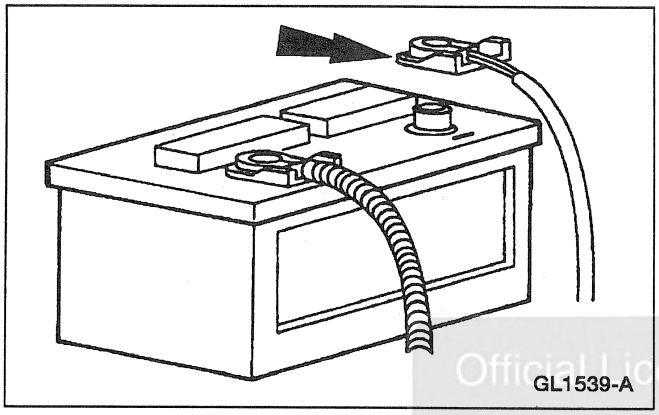

1. Disconnect the battery ground cable.

Official Licensed Product
Ford Motor Company®

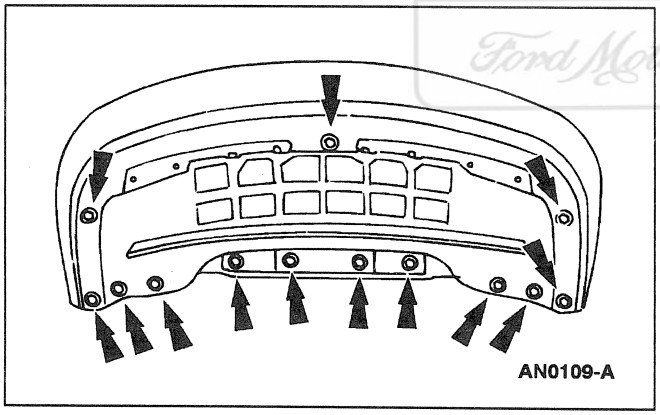

2. Remove the screws and the front valance panel (17626).

3. Disconnect the low beam bulb to low beam ballast connector.

REMOVAL AND INSTALLATION (Continued)

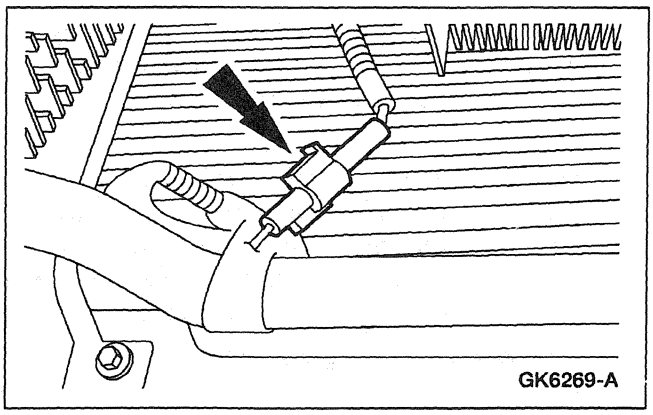

4. Disconnect the ballast harness.

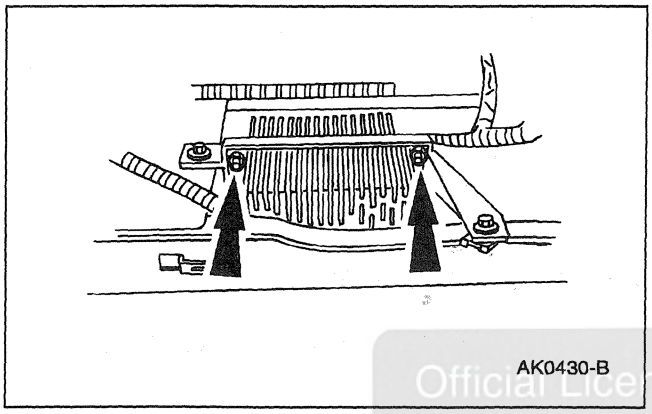

5. Remove the bolts from the ballast retaining bracket and remove the ballast and ballast harness.

Official Licensed Product
Ford Motor Company

Installation

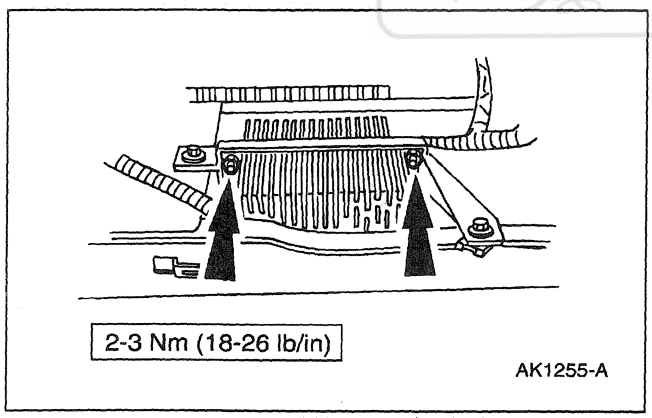

1. Install the headlamp ballast on the mounting bracket and install the bolts.

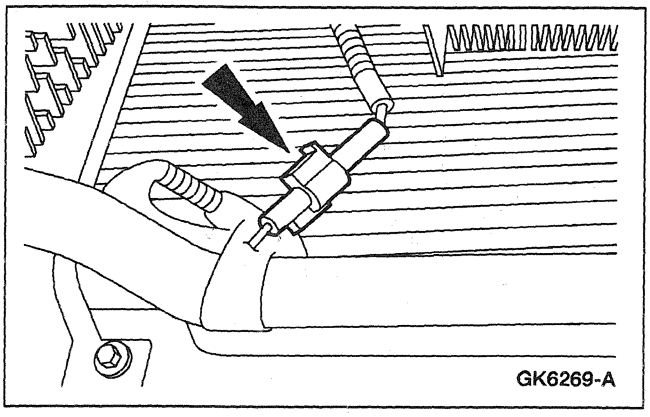

2. Connect the ballast harness.

REMOVAL AND INSTALLATION (Continued)

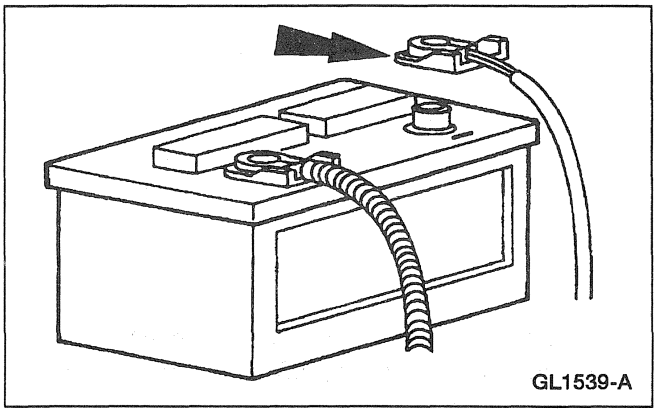
GL1539-A

3. Route the ballast and headlamp harness through the same location as the previous harness was removed and connect the connector.

4. **NOTE:** When the battery (10655) is disconnected and reconnected, some abnormal drive symptoms may occur while the vehicle relearns its adaptive strategy. The vehicle may need to be driven 16 km (10 mi) or more to relearn the strategy.

   Connect the battery ground cable.

GENERAL PROCEDURES

Headlamp Adjustment

Official Licensed Product
Ford Motor Company

NOTE: Horizontal aim must be adjusted first.

1. Position the vehicle on a level surface.

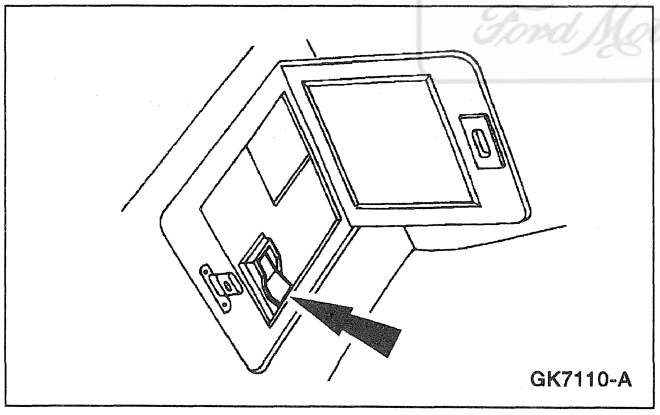
GK7110-A

2. Make sure the air suspension switch is in the ON position.

3. Start the engine and open the driver door.

GENERAL PROCEDURES (Continued)

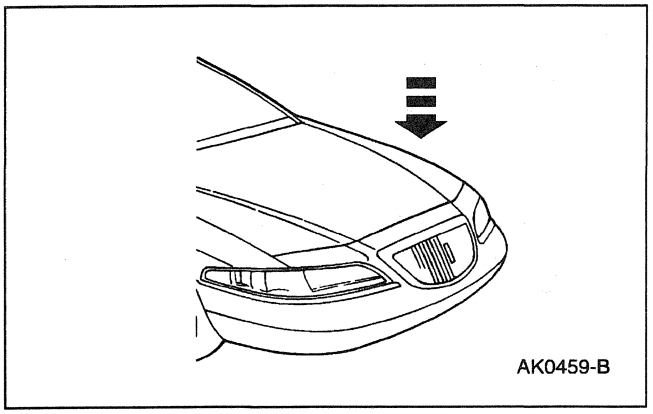
AK0459-B

4. Apply pressure to the front bumper of the vehicle.

5. Close the driver door and allow the front of the vehicle to level.

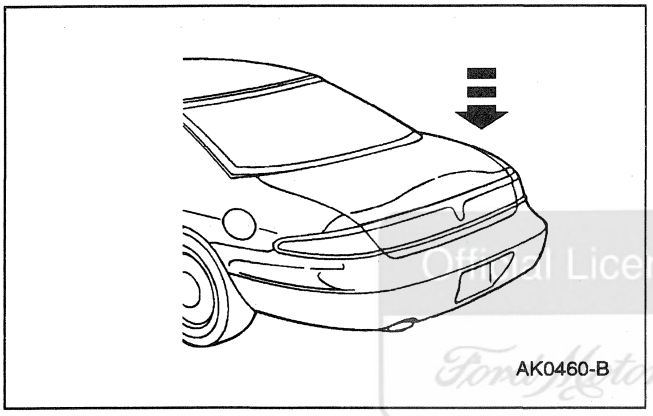
AK0460-B

6. Apply pressure to the rear bumper of the vehicle.

Official Licensed Product
Ford Motor Company

7. Open and close the driver door and allow the vehicle to level.

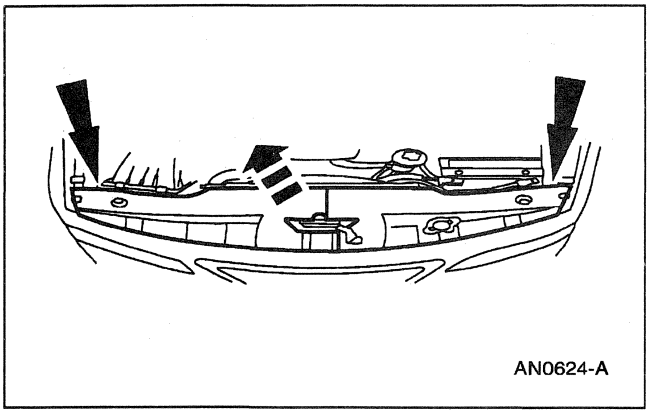
AN0624-A

8. Remove the radiator upper sight shield (8C291) .

9. Adjust the vertical aim adjustment screw until the bubble in the level is centered.

GENERAL PROCEDURES (Continued)

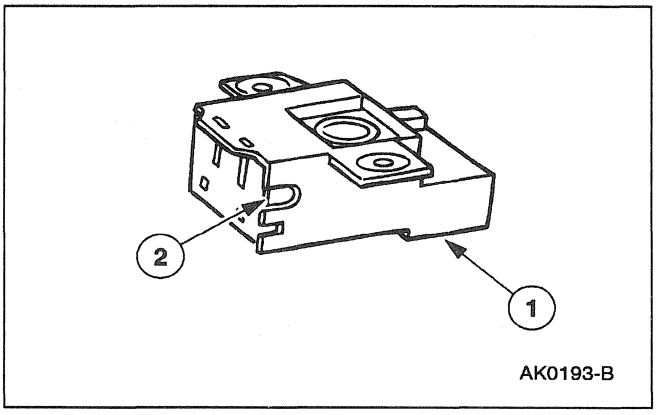

Headlamp Adjustment — Photocell/Amplifier

1. **NOTE:** If it is necessary to have the headlamps turn on earlier or later than that of the original manufacturer's calibration, the unit contains an adjustment screw and is marked with the direction and amount of rotation for the required adjustment.

   Adjust the autolamp turn ON time.

   1 Access the light sensor amplifier (13A018); refer to Photocell/Amplifier.

   2 Turn the adjustment screw counterclockwise for earlier or clockwise for later. Each 1/16 of a turn equals 15 minutes.

SPECIFICATIONS

Headlamp Bulb Specifications		
Trade Number	**Rated Current**	**Watts**
9007	4.30A Low Beam	55 Low Beam
	5.08A High Beam	65 High Beam

Torque Specifications

Description	Nm	Lb/In
Lower Instrument Panel to Dash Retaining Screws	2-3	18-27
Insulator Panel to Dash Retaining Screws	2-3	18-27
Steering Column Cover Retaining Screws	2	18
Headlamp Switch to Dash Retaining Screws	3	26
Instrument Cluster to Dash Retaining Bolts	2	18
Light Sensor Amplifier Retaining Screws	3	26

(Continued)

Torque Specifications

Description	Nm	Lb/In
Rear Panel Reflector to Luggage Compartment Door Retaining Nuts	2	18
Rear Lamp to Quarter Panel Retaining Nuts	6-7	52-62
Rear Hi-Mount Lamp Retaining Screw	3	26
Headlamp Ballast to Bracket Retaining Bolts	2-3	18-26
Headlamp to Grille Opening Panel Retaining Bolts	4-6	35-52
Headlamp to Fender Retaining Screw	1.6-2.2	14-19
Low Beam Headlamp Bulb Retaining Nuts	1-2	9-17
Steering Column Nuts	34-46	26-33

Official Licensed Product

SECTION 417-02 Interior Lighting

VEHICLE APPLICATION: Mark VIII

SUBJECT **PAGE**

DESCRIPTION AND OPERATION
Interior Lighting System 417-02-2
DIAGNOSIS AND TESTING
Interior Lighting System 417-02-3
Inspection and Verification 417-02-4
DDM Active Command Index 417-02-9
DDM Diagnostic Trouble Code (DTC) Index 417-02-8
DDM Parameter Identification (PID) Index 417-02-9
Pinpoint Tests 417-02-11
Symptom Chart 417-02-10
REMOVAL AND INSTALLATION
Lamp Assembly — Courtesy (Door) 417-02-51
Lamp Assembly — Dome/Map Combination 417-02-49
Lamp Assembly — Outside Rear View Mirror Ground Illumination 417-02-52
SPECIFICATIONS 417-02-54

Official Licensed Product
Ford Motor Company

DESCRIPTION AND OPERATION

Interior Lighting System

Interior Lighting System

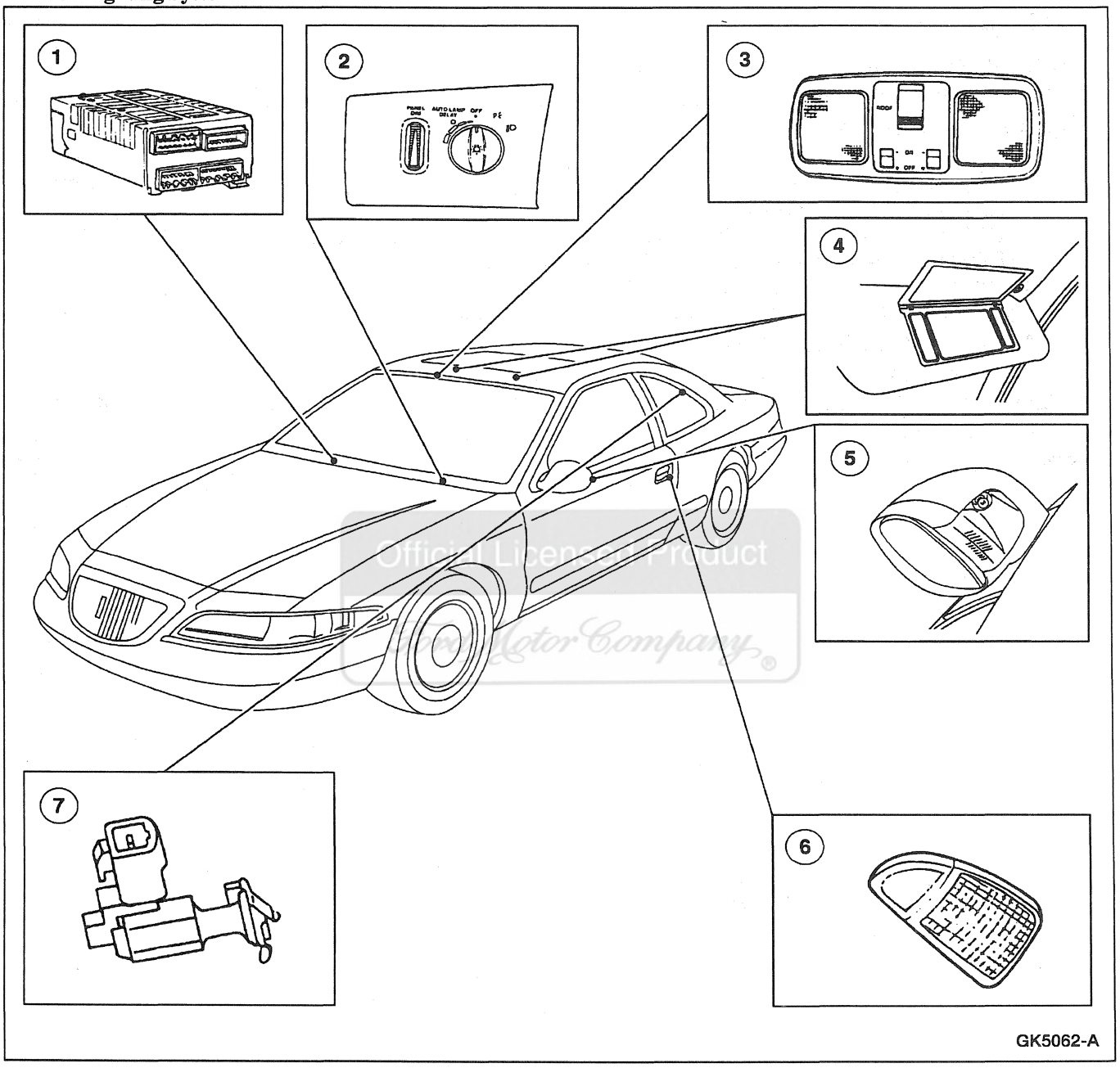

Item	Part Number	Description
1	—	Steering Column/Ignition/Lighting (SCIL) Module
2	10E846	Instrument Panel Lamp Dimmer Control

(Continued)

Item	Part Number	Description
3	—	Dome/Map Combination Lamp
4	—	Illuminated Vanity Mirror
5	17682	Outside Rear View Mirror Ground Illumination

(Continued)

DESCRIPTION AND OPERATION (Continued)

Item	Part Number	Description
6	—	Courtesy/Reading Lamps
7	13713	Interior Lamp Switch

(Continued)

Courtesy lamps illuminate when any door is opened or when the instrument panel lamp dimmer control (10E846) is in the detented UP position. The theater lighting feature gradually increases or decreases courtesy lamp intensity when any door is opened and closed. The courtesy lamps are controlled by the steering column/ignition/lighting (SCIL) module. Courtesy lamps include the driver and passenger door courtesy lamps, dome/map combination lamp, courtesy reading lamps, the illuminated visor vanity mirrors, and the outside rear view mirror ground illumination lamp.

The illuminated entry function is controlled by the SCIL module. The SCIL module will illuminate the courtesy lamps when any switch on the keyless entry keypad (14A626) is pressed or the unlock switch on the keyless entry remote transmitter (15K601) is pressed.

The battery saver function prevents excessive battery drain from loads inadvertently left on when the ignition switch is in the OFF position. The SCIL module interrupts power to the courtesy lamps after ten minutes and the demand lighting after thirty minutes.

Demand lighting includes the map lamps, reading lamps, visor mirror lamps, glove compartment lamp and the luggage compartment lamp (15702) .

DIAGNOSIS AND TESTING

Official Licensed Product
Ford Motor Company

Interior Lighting System

Refer to Electrical and Vacuum Troubleshooting Manual, Cell 89, Courtesy Lamps for schematic and connector information.

Refer to Electrical and Vacuum Troubleshooting Manual, Cell 58, Lighting Control Module for schematic and connector information.

Refer to Electrical and Vacuum Troubleshooting Manual, Cell 94, Illuminated Entry for schematic and connector information.

DIAGNOSIS AND TESTING (Continued)

Refer to Electrical and Vacuum Troubleshooting Manual, Cell 71, Instrument Illumination for schematic and connector information.

Special Tool(s)

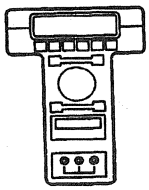 ST1217-A	New Generation STAR (NGS) Tester or equivalent 418-F048 (007-00500)
ST1137-A	73 Digital Multimeter or equivalent 105-R0051

Inspection and Verification

1. Verify the customer concern by operating the courtesy lamps and illuminated entry to duplicate the condition.
2. Visually inspect for obvious signs of mechanical or electrical damage.

Visual Inspection Chart

Mechanical	Electrical
• Switches	• Open fuse junction panel: — Fuse 26 (15A) — Fuse 5 (10A) — Fuse 1 (10A) — Fuse 41 (10A) • Miniature bulbs • Circuitry open/shorted • Connectors damaged/corroded • DDM • SCIL module

3. If the concern remains after the inspection, connect the New Generation STAR (NGS) Tester to the data link connector (DLC) located beneath the instrument panel and select the vehicle to be tested from the NGS menu. If the NGS does not communicate with the vehicle:
   - check that the program card is properly installed.
   - check the connections to the vehicle.
   - check the ignition switch position.
4. If the NGS still does not communicate with the vehicle, refer to the New Generation STAR Tester manual.
5. Perform the DATA LINK DIAGNOSTIC TEST. If the NGS responds with:
   - CKT914, CKT915 or CKT70 = ALL ECUS NO RESP/NOT EQUIP, refer to Section 418-00.
   - NO RESPONSE/NOT EQUIP for DDM, go to Pinpoint Test M.
   - NO RESP/NOT EQUIP for SCIL module, go to Pinpoint Test A.
   - SYSTEM PASSED, retrieve and record the continuous diagnostic trouble codes (DTCs), erase the continuous DTCs and perform self-test diagnostics for the DDM and SCIL module.
6. If the DTCs retrieved are related to the concern, go to SCIL Module Diagnostic Trouble Code (DTC) Index or DDM Diagnostic Trouble Code (DTC) Index to continue diagnostics.
7. If no DTCs related to the concern are retrieved, proceed to Symptom Chart to continue diagnostics.

Official Licensed Product
Ford Motor Company

SCIL Module Diagnostic Trouble Code (DTC) Index

SCIL Module Diagnostic Trouble Code (DTC) Index

DTC	Description	DTC Caused By	Action
C1446	Brake Switch Circuit Failure	SCIL	REFER to Section 206-05.
B1246	Panel Dim Potentiometer Switch Circuit Failure	SCIL	GO to Symptom Chart.
B1312	Lamp Headlamp Input Circuit Short to Battery	SCIL	REFER to Section 417-01.
B1334	Luggage Compartment Door Ajar Circuit Short to Ground	SCIL	GO to Pinpoint Test J.

(Continued)

DIAGNOSIS AND TESTING (Continued)

SCIL Module Diagnostic Trouble Code (DTC) Index

DTC	Description	DTC Caused By	Action
B1342	ECU Defective	SCIL	REPLACE the SCIL module. REFER to Section 419-10. TEST the system for normal operation.
B1353	Ignition Key-In Circuit Open	SCIL	REFER to Section 211-05.
B1360	Ignition RUN/ACC Circuit Open	SCIL	GO to Pinpoint Test K.
B1364	Ignition START Circuit Open	SCIL	GO to Pinpoint Test K.
B1446	Wiper PARK SENSE Circuit Failure	SCIL	REFER to Section 417-01.
B1485	Brake Pedal Input Short to Battery	SCIL	REFER to Section 417-01.
B1509	Flash-to-Pass Switch Circuit Short to Battery	SCIL	REFER to Section 417-01.
B1522	Hood Switch Circuit Short to Ground	SCIL	REFER to Section 419-01A.
B1562	Door Lock Cylinder Circuit Short to Ground	SCIL	REFER to Section 419-01A.
B1566	Passenger Door Ajar Circuit Short to Ground	SCIL	GO to Pinpoint Test C.
B1600	PATS Ignition Key Transponder Signal is Not Received	SCIL	REFER to Section 419-01B.
B1601	PATS Received Incorrect Key Code From Ignition Key Transponder	SCIL	REFER to Section 419-01B.
B1676	Battery Voltage Out of Range	SCIL	REFER to Section 417-01.
B1682	PATS is Disabled (Check Link Between PATS and Transponder)	SCIL	REFER to Section 419-01B.
B1687	Dome Lamp Input Circuit Short to Battery	SCIL	GO to Pinpoint Test D.
B1689	AUTOLAMP Delay Circuit Failure	SCIL	REFER to Section 417-01.
B1796	Lamp Headlamp Low Beam Circuit Short to Battery	SCIL	REFER to Section 417-01.
B1875	Turn Signal/Hazard Switch Signal Circuit Failure	SCIL	REFER to Section 417-01.
B1980	Bulb Outage condition Detected	SCIL	REFER to Section 417-01.
B2328	Steering Column Reach Feedback Potentiometer Circuit Failure	SCIL	REFER to Section 211-05.
B2332	Steering Column Tilt Feedback Potentiometer Circuit Failure	SCIL	REFER to Section 211-05.
B2351	Steering Column Switch Signal Circuit Failure	SCIL	REFER to Section 211-05.

(Continued)

Unofficial Licensed Product Ford Motor Company

DIAGNOSIS AND TESTING (Continued)

SCIL Module Diagnostic Trouble Code (DTC) Index

DTC	Description	DTC Caused By	Action
U1027	SCP Invalid or Missing Data for Engine RPM	PCM	REFER to Powertrain Control/Emissions Diagnosis Manual [1].
U1041	SCP Invalid or Missing Data for Vehicle Speed	ABS	PERFORM the ABS Self-Test.
U1057	SCP Invalid or Missing Data for Vehicle Configuration	SCIL	PERFORM the SCIL Self-Test.
U1059	SCP Invalid or Missing Data for Transmission/Transaxle/PRNDL	PCM	REFER to Powertrain Control/Emissions Diagnosis Manual [1].
U1123	SCP Invalid or Missing Data for Odometer	ABS	PERFORM the ABS Self-Test.
U1147	SCP Invalid or Missing Data for Vehicle Security	PCM	DIAGNOSE the Multiplex Communication Network; REFER to Section 418-00.
U1180	SCP Invalid or Missing Data for Personalization (Memory) Features	DDM	PERFORM the DDM Self-Test.
U1181	SCP Invalid or Missing Data for Personalization (Memory) Features	DDM	PERFORM the DDM Self-Test.
U1197	SCP Invalid or Missing Data for Door Locks	DDM	PERFORM the DDM Self-Test.
U1198	SCP Invalid or Missing Data for External Access (Doors)	DDM	PERFORM the DDM Self-Test.
U1199	SCP Invalid or Missing Data for External Access (Doors)	DDM	PERFORM the DDM Self-Test.
U1211	SCP Invalid or Missing Data for Restraints	DSM	PERFORM the DSM Self-Test.
U1222	SCP Invalid or Missing Data for Interior Lamps	DDM	PERFORM the DDM Self-Test.

Official Licensed Product

SCIL Module Parameter Identification (PID) Index

SCIL Module Parameter Identification (PID) Index

Display	Description	Content
CCNTSCI	Number Of Continuous DTCS On SCIL	one count per bit
BOO__SCI	Brake Switch Input	ON, OFF
PARK__BRK	Parking Brake Switch Input	ON, OFF
TILT	Steering Column Tilt Switch	SHORT, UP, DOWN, OFF
TELESCP	Steering Column Telescope Switch	SHORT, IN, OUT, OFF
TILTPOS	Tilt Position Sensor	SENSED, notSEN
TELEPOS	Telescope Position Sensor	SENSED, notSEN
TURN__SW	Left And Right Turn Signal Switch	OFF, LEFT, RIGHT, SHORT
LBEAMSW	Low Beam Switch	ON, OFF
HBEAMSW	High Beam Switch	ON, OFF

(Continued)

1 Can be purchased as a separate item.

DIAGNOSIS AND TESTING (Continued)

SCIL Module Parameter Identification (PID) Index

Display	Description	Content
PARK__SW	Parking Switch	ON, OFF
LIGHTSN	Ambient Light	DAY, NIGHT
FLASH	Flash To Pass Switch	ON, OFF
FTURN__L	Left & Right Front Turn Lamp	R__OPEN, L__OPEN, L/R__OPEN, OK
RTURN__L	Left & Right Rear Turn Lamp	R__OPEN, L__OPEN, L/R__OPEN, OK
TAILLMP	Left & Right Tail Lamp	OPEN, OK
LOWBEAM	Low Beam Lamp	R__OPEN, L__OPEN, L/R__OPEN, OK
AUTOLMP	Autolamp Switch	ON, OFF
ALP__IMP	Autolamp Analog Input	0-100%
DOMESW	Dome Lamp Switch	ACTIVE, notACT
PANLDIM	Panel Dim Intensity Switch	0-100%
HOOD__SW	Hood Ajar Switch	AJAR, CLOSED
DECKLID	Decklid Ajar Switch	AJAR, CLOSED
P__DR__SW	Passenger Door Ajar Switch	AJAR, CLOSED
IGN__KEY	Ignition Key In/Out	IN, OUT
IGN__SCI	Ignition Switch	START, RUN, OFF, ACCSSY
WPPRKSW	Windshield Wiper Park Sense	notPRK, PARKED
NUMKEYS	Number Of Ignition Key Codes Supported	BCD (valid range 0-18)
DRLKCYL	Door Lock Cylinder	ON, OFF
ENABLE	PATS System Status	ON, OFF

SCIL Module Active Command Index

SCIL Module Active Command Index

Active Command	Display	Action
PID LATCH	PID LATCH	ON OFF
ONE TOUCH WINDOW DWN & ACCY DELAY	ACCY RLY	ON OFF
WARNING LAMPS AND CHIME	CHIME	ON OFF
	ANTI-THEFT	ON OFF
	AUTOLMP	ON OFF
	HIGH BEAM	ON OFF
INTERIOR COURTESY LAMPS	INT LAMPS	ON OFF
	MIRRORLAMP	ON OFF

(Continued)

SCIL Module Active Command Index

Active Command	Display	Action
DECKLID RELEASE	RELEASE	ON OFF
TURN SIGNAL AND MARKER LAMPS	LF TURN	ON OFF
	RF TURN	ON OFF
	LR TURN	ON OFF
	RR TURN	ON OFF
	PARKLAMPS	ON OFF
HEADLAMP CONTROL	LEFT LOW	ON OFF
	RIGHT LOW	ON OFF
	HIGH BEAM	ON OFF
	DRUN LAMP	ON OFF
	LF CORNER	ON OFF

(Continued)

DIAGNOSIS AND TESTING (Continued)

SCIL Module Active Command Index

Active Command	Display	Action
	RF CORNER	ON OFF
HORN CONTROL	HORN	ON OFF
BACKLIGHTING INTENSITY	INTENSITY	0%-100%
COURTESY LAMP INTENSITY	INTENSITY	0%-100%
DOOR AJAR SIGNAL	DOOR AJAR	ON OFF
TRANSMIT SIGNAL COMMAND	TRANSMIT	ON OFF
BRAKE SYSTEM	BRK/SHIFT	ON OFF

(Continued)

SCIL Module Active Command Index

Active Command	Display	Action
	PARK BRK	ON OFF
STEERING COLUMN CONTROL	TILT UP	ONE SECOND TIME OUT
	TILT DOWN	ONE SECOND TIME OUT
	TELSCP IN	ONE SECOND TIME OUT
	TELSCPOUT	ONE SECOND TIME OUT
KEYCODE ERASE TIME SET	MINUTES	8-63 MINUTES

DDM Diagnostic Trouble Code (DTC) Index

DDM Diagnostic Trouble Code (DTC) Index

DTC	Description	DTC Caused By	Action
B1322	Door Ajar LF Circuit Short to Ground	DDM	GO to Pinpoint Test C.
B1342	ECU is Defective	DDM	CLEAR the DTCs. RETRIEVE the DTCs. If DTC B1342 is retrieved, REPLACE the DDM; REFER to Section 419-10. TEST the system for normal operation.
B1396	Power Door Lock Circuit Short to Battery	DDM	REFER to Section 501-14B.
B1525	Keyless Entry Circuit Short to Battery	DDM	REFER to Section 501-14B.
B1529	Memory Set Switch Circuit Short to Battery	DDM	REFER to Section 501-09.
B1539	Mirror Driver Switch Assembly Circuit Failure	DDM	REFER to Section 501-09.
B1549	Power Window Master Circuit Short to Battery	DDM	REFER to Section 501-11.
B1554	Luggage Compartment Door Release Circuit Short to Ground	DDM	REFER to Section 501-14A.
B1676	Battery Voltage Out of Range	DDM	REFER to Section 414-00.
U1041	SCP Invalid or Missing Data for Vehicle Speed	ABS	PERFORM the ABS Self-Test.
U1059	SCP Invalid or Missing Data for Transmission/Transaxle/ PRNDL	PCM	REFER to Powertrain Control/Emissions Diagnosis Manual [2].

(Continued)

2 Can be purchased as a separate item.

DIAGNOSIS AND TESTING (Continued)

DDM Diagnostic Trouble Code (DTC) Index

DTC	Description	DTC Caused By	Action
U1117	SCP Invalid or Missing Data for Electrical Energy Management	SCIL	PERFORM the SCIL Self-Test.
U1135	SCP Invalid or Missing Data for Ignition Switch/Starter	SCIL	PERFORM the SCIL Self-Test.
U1196	SCP Invalid or Missing Data for Door Locks	SCIL	PERFORM the SCIL Self-Test.
U1199	SCP Invalid or Missing Data for External Access (Doors)	SCIL	PERFORM the SCIL Self-Test.

DDM Parameter Identification (PID) Index

DDM Parameter Identification (PID) Index

PID	Description	Expected Values
CCNT__DD	Number of Continuous DTCs on DDM	one count per bit
KEYCODE	Keyless Entry Factory Code	5 digit no. encoded, INVLD
D__DR__DD	Driver Door Ajar Switch	AJAR, CLOSED
DLIDRLS	Deck Lid Release Switch	ON, OFF
D__PW__SW	Driver Power Window Switch	UP, DOWN, OFF, SHORT
OTD__SW	One Touch Down Switch	OFF, DOWN
DR__LOCK	Door Lock Output State	SHORT, LOCK, UNLOCK, OFF
D__WINDO	Driver Front Window	DOWN, notDWN
MEM__OFF	Memory Set Switch	ACTIVE, notACT
MEM2__SW	Memory Recall Switch #2	OFF, ON
MEM1__SW	Memory Recall Switch #1	OFF, ON
MIR__SEL	Power Mirror Select Switch	PSSNGR, DRIVER
MIRV__SW	Power Mirror Position Switch-Vertical	SHORT, DOWN, UP, OFF
MIRH__SW	Power Mirror Position Switch - Horizontal	SHORT, RIGHT, LEFT, OFF
KEY__PAD	Keyless Entry Switch	1, 3, 5, 7, 9

DDM Active Command Index

DDM Active Command Index

Active Command	Display	Action
PID LATCH	PID LATCH	ON, OFF
MEMORY SEAT LED CONTROL	LED STATE	ON, OFF
KEYPAD BACKLIGHTING	LIGHT	ON, OFF
FRONT WINDOW CONTROL	DD DOWN	ON, OFF
DOOR LOCK CONTROL	LOCK	ON, OFF
	UNLOCK	ON, OFF
	DD UNLOCK	ON, OFF

DIAGNOSIS AND TESTING (Continued)

Symptom Chart

Symptom Chart

Condition	Possible Source	Action
• No Communication With the Module — Steering Column/Ignition/Lighting Module	• SCIL module. • Circuitry. • Fuse.	• GO to Pinpoint Test A.
• The Courtesy Lamps are Inoperative	• I/P dimming switch. • Circuitry. • Lamp switch . • SCIL module.	• GO to Pinpoint Test B.
• The Courtesy Lamps Stay On Continuously	• Lamp assembly. • Circuitry. • SCIL module. • I/P dimming switch.	• GO to Pinpoint Test C.
• The Courtesy Lamps Do Not Turn On With One Door Open	• Circuitry. • SCIL module. • Door ajar switch. • Driver door module (DDM).	• REFER to Section 419-10.
• An Individual Courtesy Lamp is Inoperative	• Lamp assembly. • Circuitry. • Bulb.	• GO to Pinpoint Test D.
• The Illuminated Entry is Inoperative When Using the Remote Transmitter	• SCIL module. • Circuitry. • DDM. • Remote transmitter.	• GO to Pinpoint Test E.
• The Illuminated Entry is Inoperative When Using the Keypad	• SCIL module. • Circuitry. • DDM. • Keyless entry keypad switch assembly.	• GO to Pinpoint Test F.
• An Individual Courtesy is Inoperative — One/Both Mirror Lamp Do/Does Not Operate	• SCIL module. • Circuitry. • Bulb. • Power heated memory mirror.	• GO to Pinpoint Test G.
• The Illuminated Entry Does Not Fade-Out	• SCIL module.	• REPLACE the SCIL module; REFER to Section 419-10. TEST the system for normal operation.
• The Demand Lighting is Inoperative	• SCIL module. • Circuitry.	• GO to Pinpoint Test H.
• An Individual Demand Lighting Lamp Is Inoperative	• Circuitry. • Bulb. • Lamp assembly.	• GO to Pinpoint Test J.
• The Battery Saver Does Not Deactivate After Timeout	• Circuitry. • Ignition switch. • SCIL module.	• GO to Pinpoint Test K.
• The Courtesy Lamps Do Not Turn On With One Door Open — Driver or Passenger Door	• SCIL module. • DDM. • Circuitry. • Door ajar switch.	• GO to Pinpoint Test L.
• No Communication With the Module — Driver Door Module	• Circuitry. • Fuses. • DDM.	• GO to Pinpoint Test M.

Of Licensed Product
Chrysler Corporation

DIAGNOSIS AND TESTING (Continued)

Pinpoint Tests

⚠ CAUTION: Be careful when probing the fuse junction panel, power distribution box or any connectors. Damage will result to the connector receptacle if the probe or terminal being used is too large.

⚠ CAUTION: Electronic modules are sensitive to electrical charges. If exposed to these charges, damage may result.

PINPOINT TEST A: NO COMMUNICATION WITH THE MODULE — STEERING COLUMN/IGNITION/LIGHTING MODULE

TEST CONDITIONS	TEST DETAILS/RESULTS/ACTIONS
A1 CHECK CIRCUIT 875 (BK/LB) FOR AN OPEN	
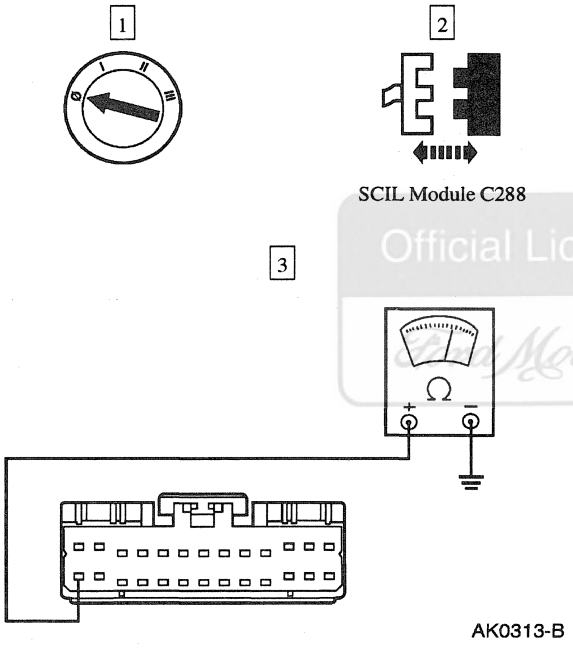	3 Measure the resistance between SCIL module C288-14, circuit 875 (BK/LB), and ground. • Is the resistance less than 5 ohms? → **Yes** GO to **A2**. → **No** REPAIR circuit 875 (BK/LB). TEST the system for normal operation.

Official Licensed Product Ford Motor Company®

(Continued)

DIAGNOSIS AND TESTING (Continued)

PINPOINT TEST A: NO COMMUNICATION WITH THE MODULE — STEERING COLUMN/IGNITION/LIGHTING MODULE (Continued)

TEST CONDITIONS	TEST DETAILS/RESULTS/ACTIONS
A2 CHECK CIRCUIT 57 (BK) FOR OPEN	
1 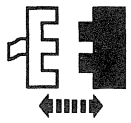 SCIL Module C287 2 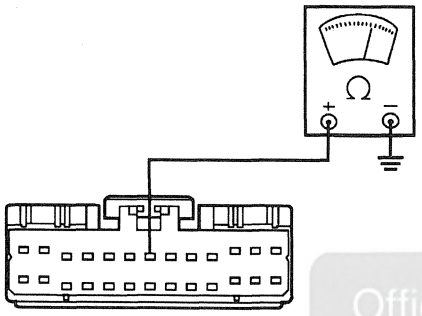 AK0314-B	2 Measure the resistance between SCIL module C287-7, circuit 57 (BK), and ground. • Is the resistance less than 5 ohms? → **Yes** GO to **A3**. → **No** REPAIR circuit 57 (BK). TEST the system for normal operation.
A3 CHECK FOR VOLTAGE TO THE STEERING COLUMN/IGNITION/LIGHTING CONTROL (SCIL) MODULE	
1 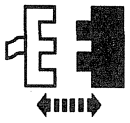 SCIL Module C289 2 3 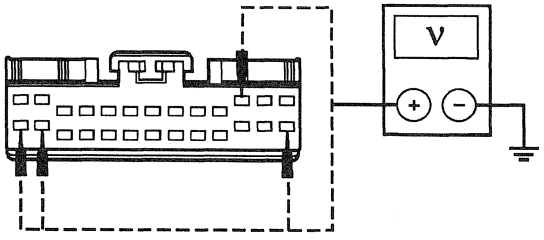 GK4906-A	3 Measure the voltage between the SCIL module C287 pins and ground; refer to the following chart: **Connector Pin / Circuit** C287-14 — 906 (R/O) C287-26 — 19 (LB/R) C287-15 — 1055 (W/LG) C287-11 — 1056 (DB/LG)

Official Licensed Product Ford Motor Company

(Continued)

DIAGNOSIS AND TESTING (Continued)

PINPOINT TEST A: NO COMMUNICATION WITH THE MODULE — STEERING COLUMN/IGNITION/LIGHTING MODULE (Continued)

TEST CONDITIONS	TEST DETAILS/RESULTS/ACTIONS
A3 CHECK FOR VOLTAGE TO THE STEERING COLUMN/IGNITION/LIGHTING CONTROL (SCIL) MODULE (Continued)	

4

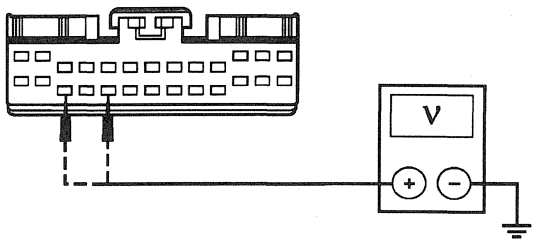

GK4907-A

4 Measure the voltage between the SCIL module C288 pins and ground; refer to the following chart:

Connector Pin	Circuit
C288-16	251 (BR/O)
C288-18	158 (BK/PK)

5

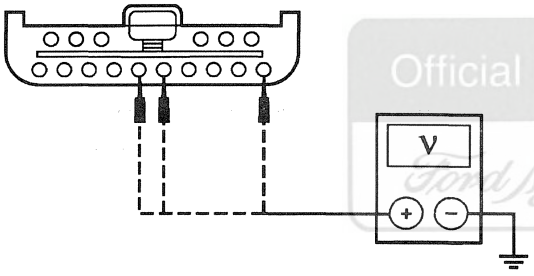

GK4908-A

5 Measure the voltage between the SCIL module C289 pins and ground; refer to the following chart:

Connector Pin	Circuit
C289-5	1058 (BR/W)
C289-6	1057 (O/BK)
C289-1	1046 (T)

Official Licensed Product
Ford Motor Company

- Are all the voltages greater than 10 volts?

→ **Yes**
REFER to Section 418-00.

→ **No**
REPAIR the circuit in question. TEST the system for normal operation.

DIAGNOSIS AND TESTING (Continued)

PINPOINT TEST B: THE COURTESY LAMPS ARE INOPERATIVE

TEST CONDITIONS	TEST DETAILS/RESULTS/ACTIONS
B1 RETRIEVE THE DTCS	
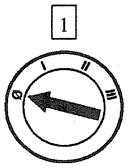 1 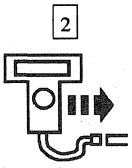 2 NGS 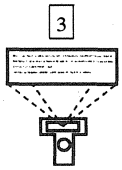 3 Retrieve Continuous DTCs 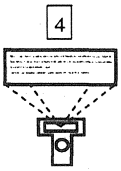 4 Clear Continuous DTCs 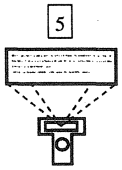 5 SCIL Module Self-Test	• Are any DTCs retrieved? → **Yes** If DTC B1246, GO to **B6**. → **No** GO to **B2**.
B2 CHECK FUSE 26 (15A)	
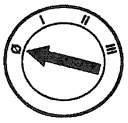 1 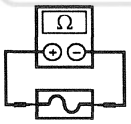 2 Fuse 26 (15A)	• Is fuse 26 (15A) OK? → **Yes** GO to **B3**. → **No** REPLACE fuse 26 (15A). TEST the system for normal operation. If the fuse fails again, CHECK for a short to ground. REPAIR as necessary.

(Continued)

Official Licensed Product
Ford Motor Company

DIAGNOSIS AND TESTING (Continued)

PINPOINT TEST B: THE COURTESY LAMPS ARE INOPERATIVE (Continued)

TEST CONDITIONS	TEST DETAILS/RESULTS/ACTIONS
B3 CHECK FOR VOLTAGE TO THE SCIL MODULE — COURTESY LAMP INPUT CIRCUIT 906 (R/O)	
1 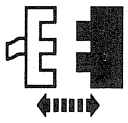 SCIL Module C287 2 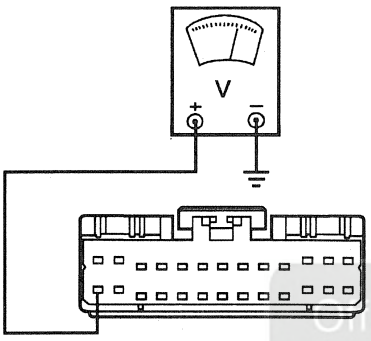 AK0912-B	2 Measure the voltage between SCIL module C287-14, circuit 906 (R/O), and ground. • Is the voltage greater than 10 volts? → **Yes** GO to **B4**. → **No** REPAIR circuit 906 (R/O). TEST the system for normal operation.
B4 CHECK THE SCIL MODULE OUTPUT FOR SHORT TO GROUND — CIRCUIT 53 (BK/LB)	
1 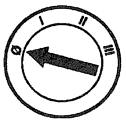 2 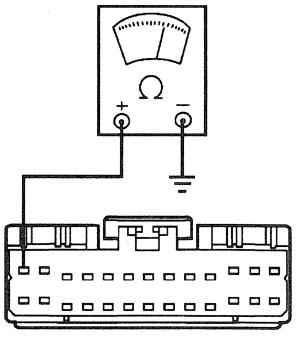 AK0914-B	2 Measure the resistance between SCIL module C287-1, circuit 53 (BK/LB), and ground. • Is the resistance greater than 10,000 ohms? → **Yes** GO to **B5**. → **No** REPAIR circuit 53 (BK/LB). TEST the system for normal operation.

Official Licensed Product Ford Motor Company

(Continued)

DIAGNOSIS AND TESTING (Continued)

PINPOINT TEST B: THE COURTESY LAMPS ARE INOPERATIVE (Continued)

TEST CONDITIONS	TEST DETAILS/RESULTS/ACTIONS
B5 CHECK CIRCUIT 53 (BK/LB) FOR AN OPEN	
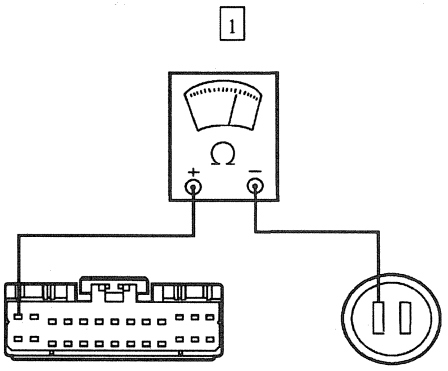 AK0915-B	1 Measure the resistance between LH I/P courtesy lamp C219, circuit 53 (BK/LB), and SCIL module C287-1, circuit 53 (BK/LB). • Is the resistance less than 5 ohms? → **Yes** REPLACE the SCIL module; REFER to Section 419-10. TEST the system for normal operation. → **No** REPAIR circuit 53 (BK/LB). TEST the system for normal operation.
B6 CHECK THE I/P DIMMING SWITCH FOR CONTINUITY	
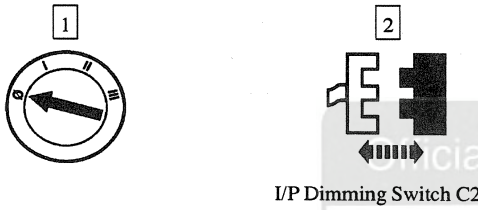 I/P Dimming Switch C263 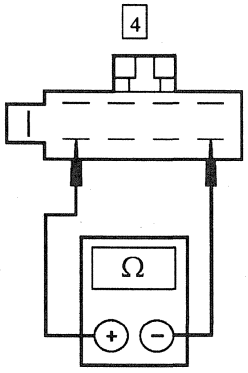 GK7275-A	3 Place the dome switch in the ON position. 4 Measure the resistance between I/P dimming switch terminals 6 and 9. • Does continuity exist? → **Yes** GO to **B7**. → **No** REPLACE the I/P dimming switch; REFER to Section 417-01. TEST the system for normal operation.

Official Licensed Product Ford Motor Company

(Continued)

DIAGNOSIS AND TESTING (Continued)

PINPOINT TEST B: THE COURTESY LAMPS ARE INOPERATIVE (Continued)

TEST CONDITIONS	TEST DETAILS/RESULTS/ACTIONS
B7 CHECK CIRCUIT 1035 (O/R) FOR OPEN AND SHORT TO GROUND	
1 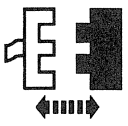 SCIL Module C286 2 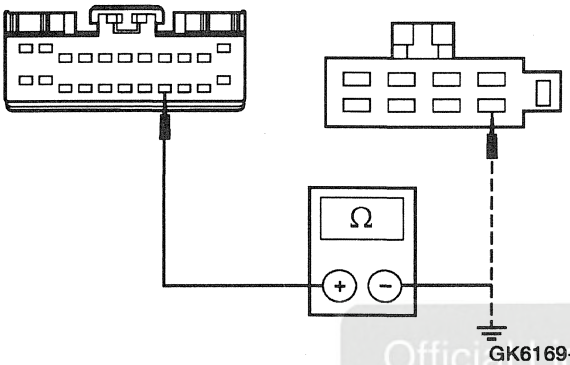 GK6169-A	2 Measure the resistance between SCIL module C286-19, circuit 1035 (O/R), and I/P dimming switch C263-9, circuit 1035 (O/R); and between SCIL module C286-19, circuit 1035 (O/R), and ground. • Is the resistance less than 5 ohms between the two connectors and greater than 10,000 ohms between the SCIL module connector and ground? → **Yes** GO to **B8**. → **No** REPAIR circuit 1035 (O/R). TEST the system for normal operation.
B8 CHECK CIRCUIT 1034 (BK/W) FOR OPEN AND SHORT TO GROUND	
1 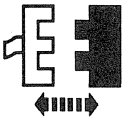 SCIL Module C288 2 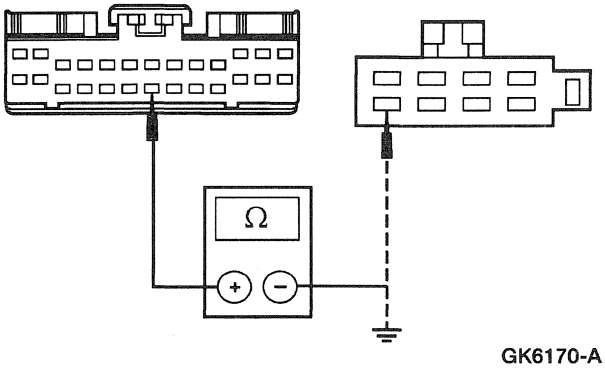 GK6170-A	2 Measure the resistance between SCIL module C288-20, circuit 1034 (BK/W), and I/P dimming switch C263-6, circuit 1034 (BK/W); and between SCIL module C288-20, circuit 1034 (BK/W), and ground. • Is the resistance less than 5 ohms between the two connectors and greater than 10,000 ohms between the SCIL module connector and ground? → **Yes** REPLACE the SCIL module; REFER to Section 419-10. TEST the system for normal operation. → **No** REPAIR circuit 1034 (BK/W). TEST the system for normal operation.

Official Licensed Product

DIAGNOSIS AND TESTING (Continued)

PINPOINT TEST C: THE COURTESY LAMPS STAY ON CONTINUOUSLY

TEST CONDITIONS	TEST DETAILS/RESULTS/ACTIONS
C1 RETRIEVE THE DTCS	
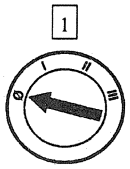 1 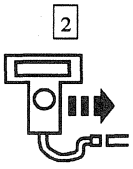 2 NGS 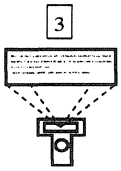 3 Retrieve Continuous DTCs 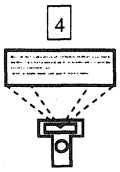 4 Clear Continuous DTCs 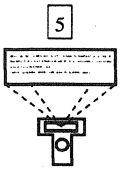 5 SCIL On-Demand Self-Test 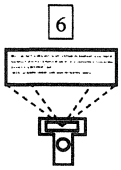 6 DDM On-Demand Self-Test	5 **NOTE:** Observe the courtesy lamps while performing this test. Perform the SCIL module self-test. • Are any DTCs retrieved? → **Yes** If SCIL DTC B1246, GO to **C11**. If DDM DTC B1322, GO to **C5**. If SCIL DTC B1566, GO to **C5**. → **No** GO to **C2**.

Official Licensed Product
Ford Motor Company

(Continued)

DIAGNOSIS AND TESTING (Continued)

PINPOINT TEST C: THE COURTESY LAMPS STAY ON CONTINUOUSLY (Continued)

TEST CONDITIONS	TEST DETAILS/RESULTS/ACTIONS
C2 CHECK CIRCUIT 53 (BK/LB) FOR SHORT TO POWER	
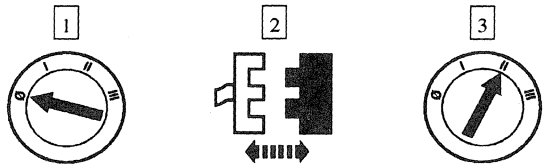 SCIL Module C287	• Do the courtesy lamps turn off during self-test? → **Yes** REPLACE the SCIL module; REFER to Section 419-10. TEST the system for normal operation. → **No** REPAIR circuit 53 (BK/LB). TEST the system for normal operation.
C3 CHECK THE I/P DIMMING SWITCH FOR SHORT TO POWER	
I/P Dimming Switch C263	• Do the courtesy lamps turn off? → **Yes** REPLACE the I/P dimming switch; REFER to Section 417-01. TEST the system for normal operation. → **No** GO to **C4**.

Digital Licensed Product Ford Motor Company

(Continued)

DIAGNOSIS AND TESTING (Continued)

PINPOINT TEST C: THE COURTESY LAMPS STAY ON CONTINUOUSLY (Continued)

TEST CONDITIONS	TEST DETAILS/RESULTS/ACTIONS
C4 CHECK THE DOME LAMP INPUT FOR SHORT TO POWER — CIRCUIT 1034 (BK/W)	
1 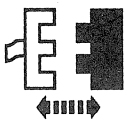 SCIL Module C288 2 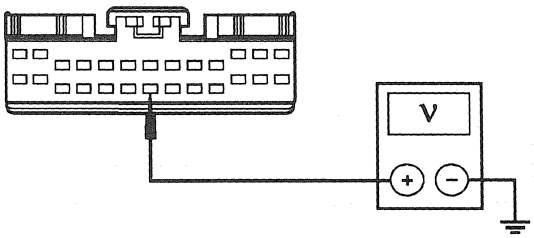 GK4909-A	2 Measure the voltage between SCIL module C288-20, circuit 1034 (BK/W), and ground. • Is there any voltage present? → **Yes** REPAIR circuit 1034 (BK/W). TEST the system for normal operation. → **No** REPLACE the SCIL module; REFER to Section 419-10. TEST the system for normal operation.
C5 CHECK THE DRIVER DOOR INPUT — MONITOR THE DDM PID D__DR__DD	
2 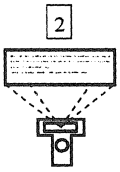	1 Close all doors. 2 Monitor the DDM PID D__DR__DD. • Does the DDM PID D__DR__DD indicate AJAR? → **Yes** GO to **C6**. → **No** GO to **C8**.

Official Licensed Product
Ford Motor Company

(Continued)

DIAGNOSIS AND TESTING (Continued)

PINPOINT TEST C: THE COURTESY LAMPS STAY ON CONTINUOUSLY (Continued)

TEST CONDITIONS	TEST DETAILS/RESULTS/ACTIONS
C6 CHECK CIRCUIT 627 (BK/O) FOR SHORT TO GROUND — DDM CONNECTED	
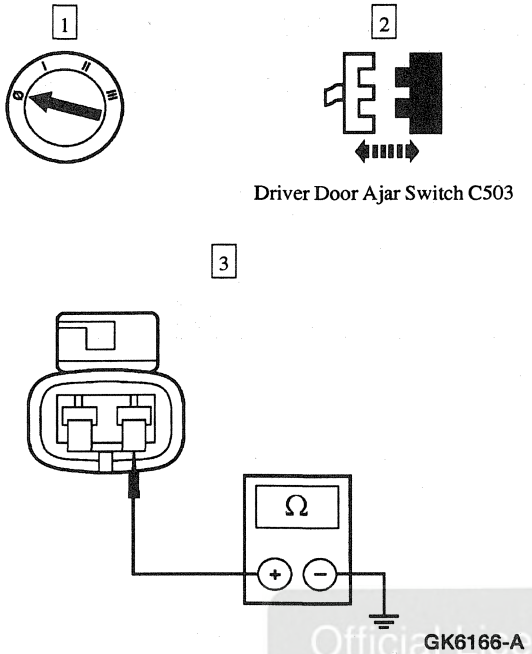	3 Measure the resistance between driver door ajar switch C503, circuit 627 (BK/O), and ground. • Is the resistance greater than 10,000 ohms? → **Yes** REPLACE the driver door ajar switch. TEST the system for normal operation. → **No** GO to **C7**.
C7 CHECK CIRCUIT 627 (BK/O) FOR SHORT TO GROUND — DDM DISCONNECTED	
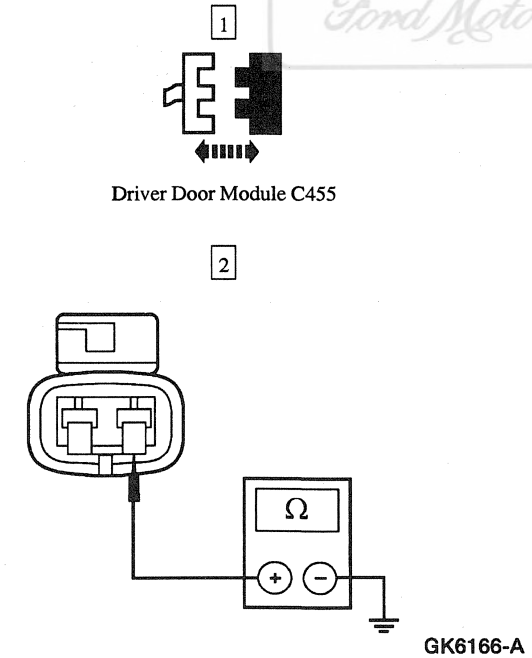	2 Measure the resistance between driver door ajar switch C503, circuit 627 (BK/O), and ground. • Is the resistance greater than 10,000 ohms? → **Yes** REPLACE the driver door module; REFER to Section 419-10. TEST the system for normal operation. → **No** REPAIR circuit 627 (BK/O). TEST the system for normal operation.

Official Licensed Product Ford Motor Company

(Continued)

DIAGNOSIS AND TESTING (Continued)

PINPOINT TEST C: THE COURTESY LAMPS STAY ON CONTINUOUSLY (Continued)

TEST CONDITIONS	TEST DETAILS/RESULTS/ACTIONS
C8 CHECK THE PASSENGER DOOR INPUT — MONITOR THE SCIL PID P__DR__SW	
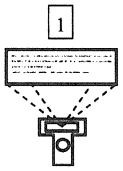	1 Monitor the SCIL PID P__DR__SW. • Does the SCIL PID P__DR__SW indicate AJAR? → **Yes** GO to **C9**. → **No** REFER to Section 501-14B.
C9 CHECK CIRCUIT 344 (BK/Y) FOR SHORT TO GROUND — SCIL MODULE CONNECTED	
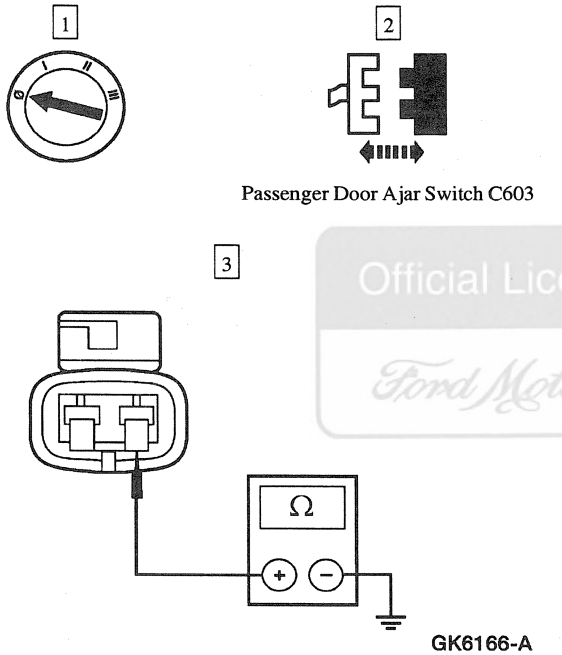	3 Measure the resistance between passenger door ajar switch C603, circuit 344 (BK/Y), and ground. • Is the resistance greater than 10,000 ohms? → **Yes** REPLACE the passenger door ajar switch. TEST the system for normal operation. → **No** GO to **C10**.

Official License
Ford Motor Company

(Continued)

DIAGNOSIS AND TESTING (Continued)

PINPOINT TEST C: THE COURTESY LAMPS STAY ON CONTINUOUSLY (Continued)

TEST CONDITIONS	TEST DETAILS/RESULTS/ACTIONS
C10 CHECK CIRCUIT 344 (BK/Y) FOR SHORT TO GROUND — SCIL MODULE DISCONNECTED	
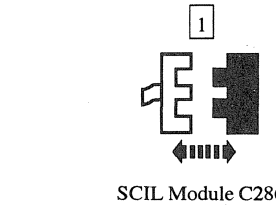 SCIL Module C286 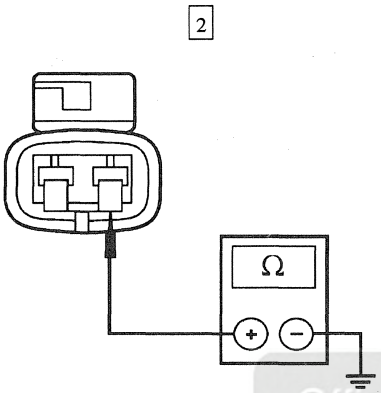 GK6166-A	2 Measure the resistance between passenger door ajar switch C603, circuit 344 (BK/Y), and ground. • Is the resistance greater than 10,000 ohms? → **Yes** REPLACE the SCIL module; REFER to Section 419-10. TEST the system for normal operation. → **No** REPAIR circuit 344 (BK/Y). TEST the system for normal operation.
C11 CHECK THE I/P DIMMING SWITCH FOR SHORT TO POWER	
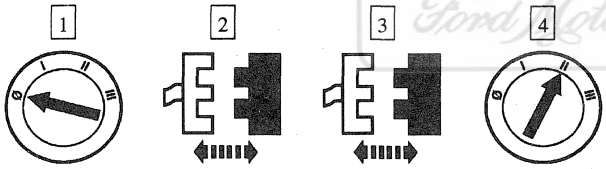 SCIL Module C286 SCIL Module C288 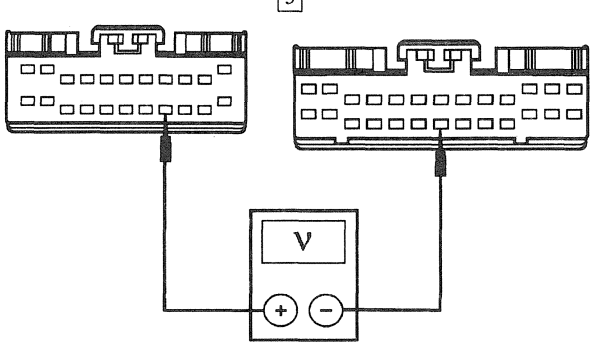 GK6171-A	5 Measure the voltage between SCIL module C286-19, circuit 1035 (O/R), and SCIL module C288-20, circuit 1034 (BK/W). • Is any voltage indicated? → **Yes** GO to **C12**. → **No** REPLACE the SCIL module; REFER to Section 419-10. TEST the system for normal operation.

Official Licensed Product Ford Motor Company

(Continued)

DIAGNOSIS AND TESTING (Continued)

PINPOINT TEST C: THE COURTESY LAMPS STAY ON CONTINUOUSLY (Continued)

TEST CONDITIONS	TEST DETAILS/RESULTS/ACTIONS
C12 CHECK CIRCUIT 1034 (BK/W) FOR SHORT TO VOLTAGE	
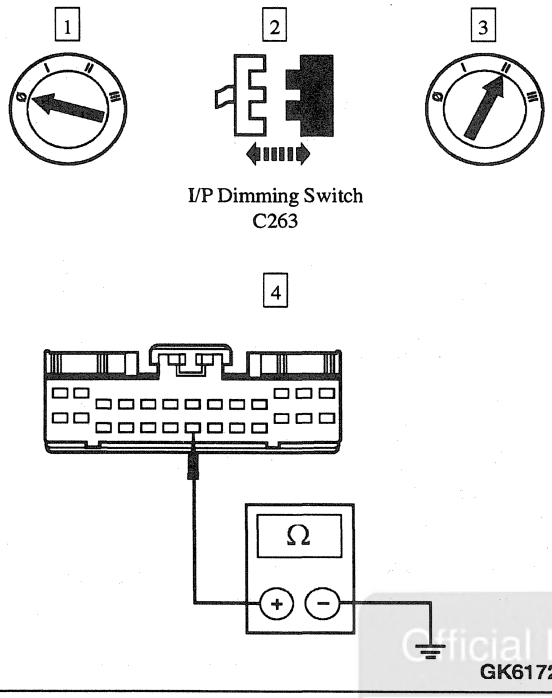	4 Measure the voltage between SCIL module C288-20, circuit 1034 (BK/W), and ground. • Is any voltage indicated? → **Yes** REPAIR circuit 1034 (BK/W). TEST the system for normal operation. → **No** REPLACE the I/P dimming switch; REFER to Section 417-01. TEST the system for normal operation.

Official Licensed Product

PINPOINT TEST D: AN INDIVIDUAL COURTESY LAMP IS INOPERATIVE

TEST CONDITIONS	TEST DETAILS/RESULTS/ACTIONS
D1 CHECK THE VOLTAGE TO THE INOPERATIVE COURTESY LAMP	
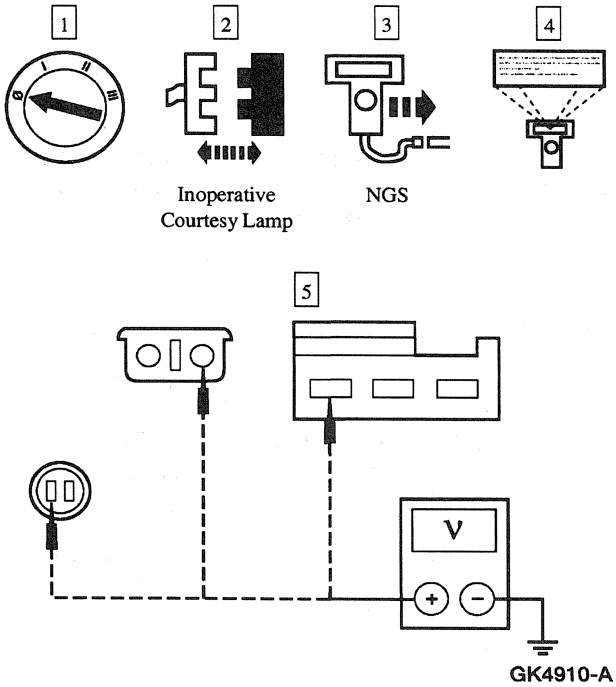	4 Trigger the SCIL active command COURTESY LAMP INTENSITY to 100%. 5 Measure the voltage between inoperative courtesy lamp connector pin, circuit 53 (BK/LB), and ground. • Is the voltage greater than 10 volts? → **Yes** GO to **D2**. → **No** REPAIR circuit 53 (BK/LB). TEST the system for normal operation.

(Continued)

DIAGNOSIS AND TESTING (Continued)

PINPOINT TEST D: AN INDIVIDUAL COURTESY LAMP IS INOPERATIVE (Continued)

TEST CONDITIONS	TEST DETAILS/RESULTS/ACTIONS
D2 CHECK THE GROUND TO THE INOPERATIVE COURTESY LAMP FOR OPEN — CIRCUIT 57 (BK)	
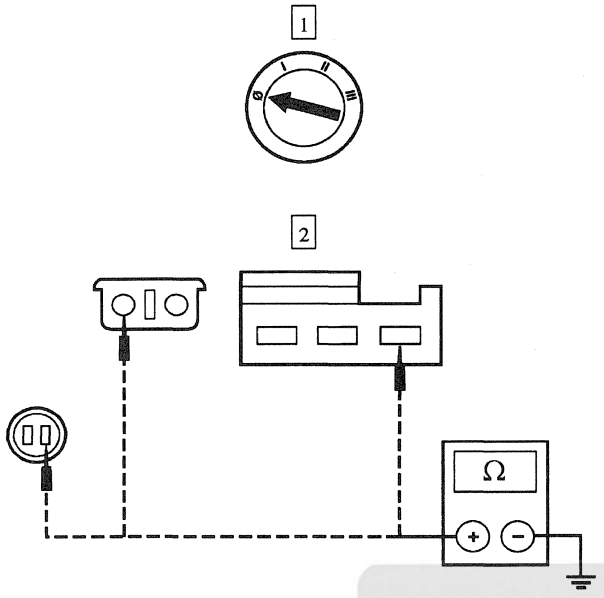	2 Measure the resistance between inoperative courtesy lamp connector pin, circuit 57 (BK), and ground. • Is the resistance less than 5 ohms? → **Yes** REPLACE the inoperative courtesy lamp assembly. TEST the system for normal operation. → **No** REPAIR circuit 57 (BK). TEST the system for normal operation.

Official Licensed Product Ford Motor Company

PINPOINT TEST E: THE ILLUMINATED ENTRY IS INOPERATIVE WHEN USING THE REMOTE TRANSMITTER

TEST CONDITIONS	TEST DETAILS/RESULTS/ACTIONS
E1 CHECK THE ILLUMINATED ENTRY OPERATION WITH THE KEYPAD	
	1 Press any number on the keyless entry keypad. • Do the courtesy lamps illuminate? → **Yes** REFER to Section 501-14B. → **No** REFER to Section 418-00.

PINPOINT TEST F: THE ILLUMINATED ENTRY IS INOPERATIVE WHEN USING THE KEYPAD

TEST CONDITIONS	TEST DETAILS/RESULTS/ACTIONS
F1 CHECK THE ILLUMINATED ENTRY OPERATION WITH THE REMOTE TRANSMITTER	
	1 Verify the doors are locked.

(Continued)

DIAGNOSIS AND TESTING (Continued)

PINPOINT TEST F: THE ILLUMINATED ENTRY IS INOPERATIVE WHEN USING THE KEYPAD (Continued)

TEST CONDITIONS	TEST DETAILS/RESULTS/ACTIONS
F1 CHECK THE ILLUMINATED ENTRY OPERATION WITH THE REMOTE TRANSMITTER (Continued)	
	2 Press the unlock button on the remote transmitter. • Do the courtesy lamps illuminate? → **Yes** REFER to Section 501-14B. → **No** REFER to Section 418-00.

PINPOINT TEST G: AN INDIVIDUAL COURTESY LAMP IS INOPERATIVE — ONE/BOTH MIRROR LAMPS DO/DOES NOT OPERATE

TEST CONDITIONS	TEST DETAILS/RESULTS/ACTIONS
G1 CHECK THE MIRROR ILLUMINATION OPERATION	
	1 Verify the doors are closed and the courtesy lamps are off. 2 Press any button on the keyless entry keypad. • Do the mirror lamps illuminate? → **Yes** The system is OK. → **No** If both mirror lamps fail to illuminate, GO to **G4**. If only one mirror lamp fails to illuminate, GO to **G2**.
G2 CHECK FOR VOLTAGE TO THE INOPERATIVE MIRROR ILLUMINATION LAMP — CIRCUIT 1037 (P/LG)	
1 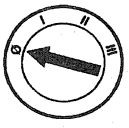 2 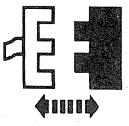	2 Disconnect the inoperative power/heated memory mirror C509 (LH) or C600 (RH).

(Continued)

Official Licensed Product
Ford Motor Company

DIAGNOSIS AND TESTING (Continued)

PINPOINT TEST G: AN INDIVIDUAL COURTESY LAMP IS INOPERATIVE — ONE/BOTH MIRROR LAMPS DO/DOES NOT OPERATE (Continued)

TEST CONDITIONS	TEST DETAILS/RESULTS/ACTIONS
G2 CHECK FOR VOLTAGE TO THE INOPERATIVE MIRROR ILLUMINATION LAMP — CIRCUIT 1037 (P/LG) (Continued)	
3 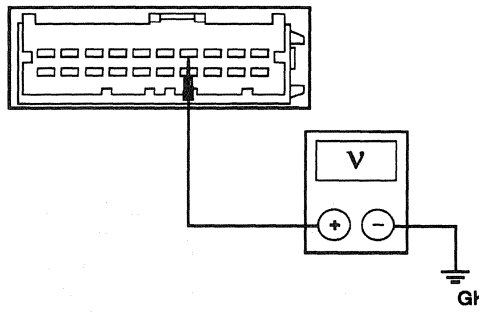 GK4828-A	3 Measure the voltage between inoperative power/heated/memory mirror C509-7 (LH) or C600-7 (RH), circuit 1037 (P/LG), and ground. • Is the voltage greater than 10 volts? → **Yes** GO to **G3**. → **No** GO to **G4**.
G3 CHECK CIRCUIT 57 (BK) FOR OPEN	
1 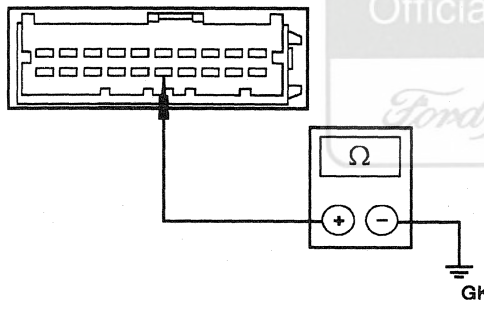 GK4829-A	1 Measure the resistance between inoperative power/heated/memory mirror C509-16 (LH) or C600-16 (RG), circuit 57 (BK), and ground. • Is the resistance less than 5 ohms? → **Yes** REPLACE the inoperative mirror lamp; REFER to Lamp Assembly — Outside Rear View Mirror Ground Illumination. TEST the system for normal operation. → **No** REPAIR circuit 57 (BK). TEST the system for normal operation.

Official Licensed Product
Ford Motor Company

(Continued)

DIAGNOSIS AND TESTING (Continued)

PINPOINT TEST G: AN INDIVIDUAL COURTESY LAMP IS INOPERATIVE — ONE/BOTH MIRROR LAMPS DO/DOES NOT OPERATE (Continued)

TEST CONDITIONS	TEST DETAILS/RESULTS/ACTIONS
G4 CHECK CIRCUIT 1037 (P/LG) FOR OPEN AND SHORT TO GROUND	
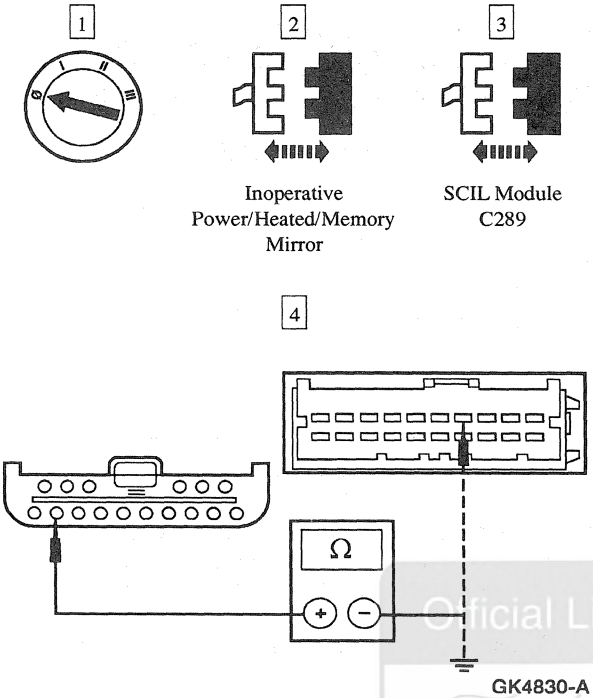	4 Measure the resistance between SCIL module C289-9, circuit 1037 (P/LG), and inoperative power/heated/memory mirror C509-7 (LH) or C600-7 (RH), circuit 1037 (P/LG); and between SCIL module C289-9, circuit 1037 (P/LG), and ground. • Is the resistance less than 5 ohms between the two connectors and greater than 10,000 ohms between the SCIL module connector and ground? → **Yes** REPLACE the SCIL module; REFER to Section 419-10. TEST the system for normal operation. → **No** REPAIR circuit 1037 (P/LG). TEST the system for normal operation.

Official Licensed Product
Ford Motor Company

DIAGNOSIS AND TESTING (Continued)

PINPOINT TEST H: THE DEMAND LIGHTING IS INOPERATIVE

TEST CONDITIONS	TEST DETAILS/RESULTS/ACTIONS
H1 CHECK THE DEMAND LIGHTING INPUT CIRCUIT FOR VOLTAGE — CIRCUIT 906 (R/O)	
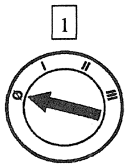 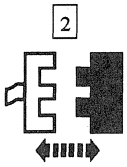 SCIL Module C289 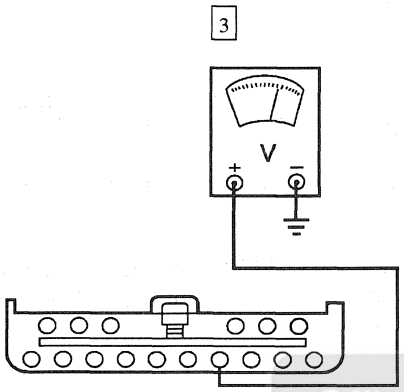 AK0929-B	3 Measure the voltage between steering SCIL module C289-4, circuit 906 (R/O), and ground. • Is the voltage greater than 10 volts? → **Yes** GO to **H2**. → **No** REPAIR circuit 906 (R/O). TEST the system for normal operation.
H2 CHECK THE DEMAND LIGHTING OUTPUT CIRCUIT FOR OPEN AND SHORT TO GROUND — CIRCUIT 54 (LG/Y)	
NOTE: All demand lighting lamp switches must be in the OFF position and the trunk lid must be closed while performing this test.	
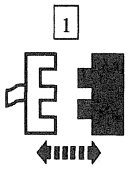 Glove Box Lamp C281 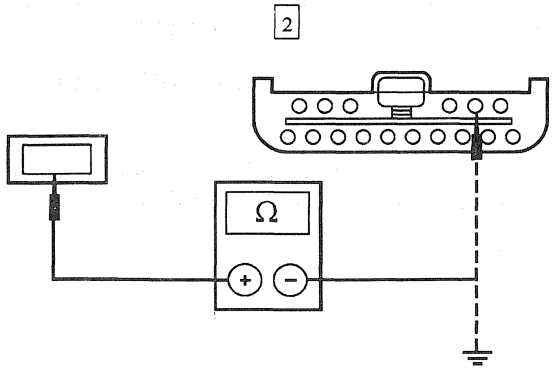 GK4912-A	2 Measure the resistance between glove box lamp C281, circuit 54 (LG/Y), and SCIL module C289-12, circuit 54 (LG/Y); and between glove box lamp C281, circuit 54 (LG/Y), and ground. • Is the resistance less than 5 ohms between the two connectors and greater than 10,000 ohms between the glove box lamp connector and ground? → **Yes** GO to **H3**. → **No** GO to **H4**.

(Continued)

Official Licensed Product Ford Motor Company

DIAGNOSIS AND TESTING (Continued)

PINPOINT TEST H: THE DEMAND LIGHTING IS INOPERATIVE (Continued)

TEST CONDITIONS	TEST DETAILS/RESULTS/ACTIONS
H3 CHECK THE GLOVE BOX LAMP FOR SHORT TO GROUND	
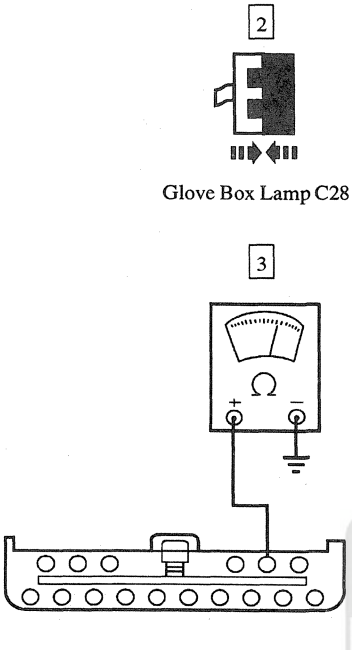	1 Close the glove box door. 3 Measure the resistance between SCIL module C289-12, circuit 54 (LG/Y), and ground. • Is the resistance greater than 10,000 ohms? → **Yes** REPLACE the SCIL module; REFER to Section 419-10. TEST the system for normal operation. → **No** GO to **H4**.
H4 CHECK THE RH REAR READING LAMP FOR SHORT TO GROUND	
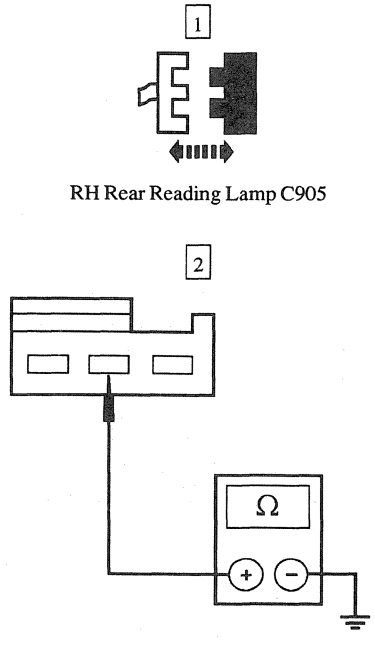	2 Measure the resistance between RH rear reading lamp C905, circuit 54 (LG/Y), and ground. • Is the resistance greater than 10,000 ohms? → **Yes** REPLACE the RH rear reading lamp. TEST the system for normal operation. → **No** GO to **H5**.

(Continued)

Official Licensed Product

DIAGNOSIS AND TESTING (Continued)

PINPOINT TEST H: THE DEMAND LIGHTING IS INOPERATIVE (Continued)

TEST CONDITIONS	TEST DETAILS/RESULTS/ACTIONS
H5 CHECK THE DOME/MAP LAMP ASSEMBLY FOR SHORT TO GROUND	
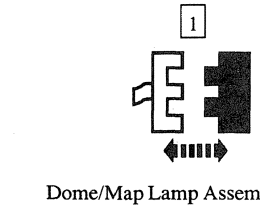 Dome/Map Lamp Assembly C903 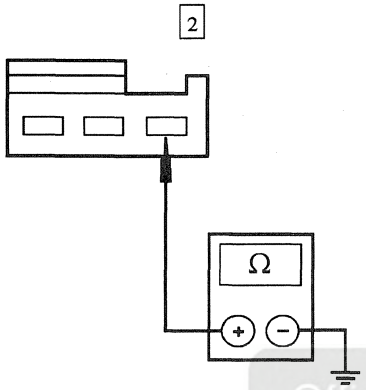 GK4913-A	2 Measure the resistance between dome/map lamp assembly C903, circuit 54 (LG/Y), and ground. • Is the resistance greater than 10,000 ohms? → **Yes** REPLACE the dome/map lamp assembly; REFER to Lamp Assembly — Dome/Map Combination. TEST the system for normal operation. → **No** GO to **H6**.
H6 CHECK THE LH VANITY MIRROR LAMP FOR SHORT TO GROUND	
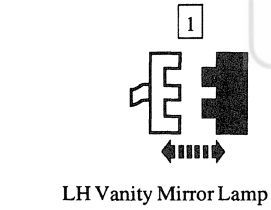 LH Vanity Mirror Lamp C909 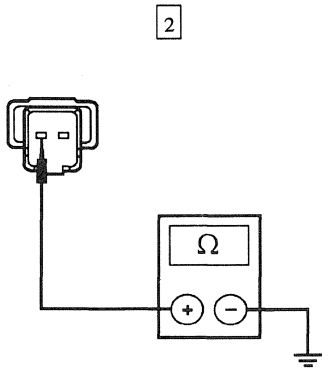 GK4915-A	2 Measure the resistance between LH vanity mirror lamp C909, circuit 54 (LG/Y), and ground. • Is the resistance greater than 10,000 ohms? → **Yes** REPLACE the LH inside visor . TEST the system for normal operation. → **No** GO to **H7**.

Official Licensed Product
Ford Motor Company

(Continued)

DIAGNOSIS AND TESTING (Continued)

PINPOINT TEST H: THE DEMAND LIGHTING IS INOPERATIVE (Continued)

TEST CONDITIONS	TEST DETAILS/RESULTS/ACTIONS
H7 CHECK THE RH VANITY MIRROR LAMP FOR SHORT TO GROUND	
1 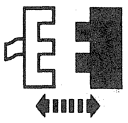 RH Vanity Mirror Lamp C908 2 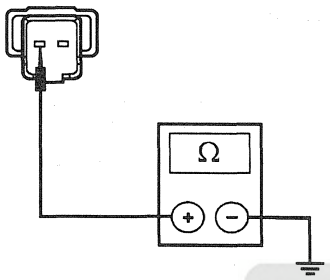 GK4915-A	2 Measure the resistance between RH vanity mirror lamp C908, circuit 54 (LG/Y), and ground. • Is the resistance greater than 10,000 ohms? → **Yes** REPLACE the RH inside visor . TEST the system for normal operation. → **No** GO to **H8**.
H8 CHECK THE LH REAR READING LAMP FOR SHORT TO GROUND	
1 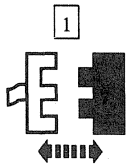 LH Rear Reading Lamp C900 2 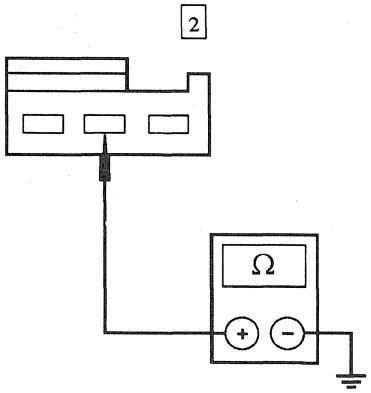 GK4914-A	2 Measure the resistance between LH rear reading lamp C900, circuit 54 (LG/Y), and ground. • Is the resistance greater than 10,000 ohms? → **Yes** REPLACE the LH rear reading lamp. TEST the system for normal operation. → **No** GO to **H9**.

Official Licensed Product
Ford Motor Company

(Continued)

DIAGNOSIS AND TESTING (Continued)

PINPOINT TEST H: THE DEMAND LIGHTING IS INOPERATIVE (Continued)

TEST CONDITIONS	TEST DETAILS/RESULTS/ACTIONS
H9 CHECK THE LUGGAGE COMPARTMENT LAMP FOR SHORT TO GROUND	
1 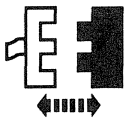 Luggage Compartment Lamp C444 2 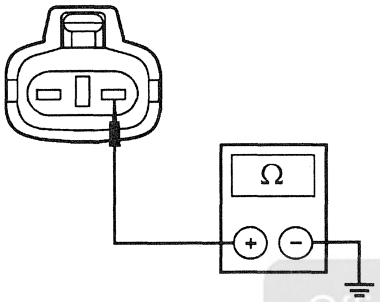 GK4916-A	2 Measure the resistance between luggage compartment lamp C444, circuit 54 (LG/Y), and ground. • Is the resistance greater than 10,000 ohms? → **Yes** REPAIR circuit 54 (LG/Y). TEST the system for normal operation. → **No** REPLACE the luggage compartment lamp. TEST the system for normal operation.

Official Licensed Product
Ford Motor Company

DIAGNOSIS AND TESTING (Continued)

PINPOINT TEST J: AN INDIVIDUAL DEMAND LIGHTING LAMP IS INOPERATIVE

TEST CONDITIONS	TEST DETAILS/RESULTS/ACTIONS
J1 RETRIEVE THE DTCs	
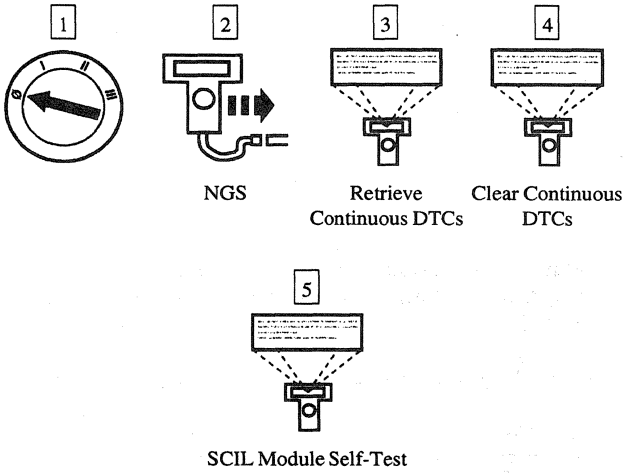	• Are any DTCs retrieved? → **Yes** If DTC B1334, GO to **J9**. → **No** If the dome/map lamp does not operate, GO to **J2**. If the LH or RH rear reading lamp does not operate, GO to **J4**. If the glove box lamp does not operate, GO to **J6**. If the LH or RH vanity mirror lamp does not operate, GO to **J7**. If the luggage compartment lamp does not operate, GO to **J9**.

Official Licensed Product
Ford Motor Company

(Continued)

DIAGNOSIS AND TESTING (Continued)

PINPOINT TEST J: AN INDIVIDUAL DEMAND LIGHTING LAMP IS INOPERATIVE (Continued)

TEST CONDITIONS	TEST DETAILS/RESULTS/ACTIONS
J2 CHECK FOR VOLTAGE TO THE DOME/MAP LAMP ASSEMBLY — CIRCUIT 54 (LG/Y)	
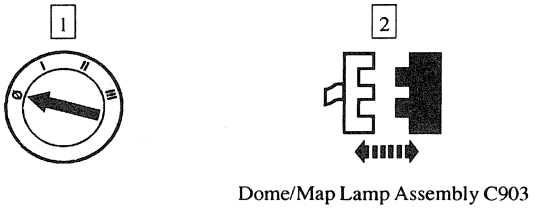 Dome/Map Lamp Assembly C903 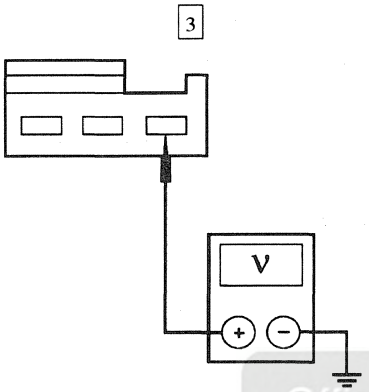 GK4917-A	3 Measure the voltage between dome/map lamp assembly C903, circuit 54 (LG/Y), and ground. • Is the voltage greater than 10 volts? → **Yes** GO to **J3**. → **No** REPAIR circuit 54 (LG/Y). TEST the system for normal operation.
J3 CHECK THE DOME/MAP LAMP ASSEMBLY GROUND — CIRCUIT 57 (BK)	
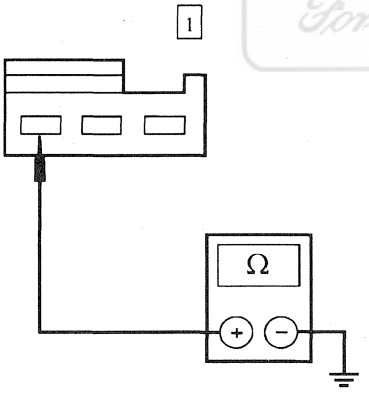 GK4918-A	1 Measure the resistance between dome/map lamp assembly C903, circuit 57 (BK), and ground. • Is the resistance less than 5 ohms? → **Yes** REPLACE the dome/map lamp assembly; REFER to Lamp Assembly — Dome/Map Combination. TEST the system for normal operation. → **No** REPAIR circuit 57 (BK). TEST the system for normal operation.

Officially Licensed Product
Ford Motor Company

(Continued)

DIAGNOSIS AND TESTING (Continued)

PINPOINT TEST J: AN INDIVIDUAL DEMAND LIGHTING LAMP IS INOPERATIVE (Continued)

TEST CONDITIONS	TEST DETAILS/RESULTS/ACTIONS
J4 CHECK FOR VOLTAGE TO THE INOPERATIVE REAR READING LAMP	
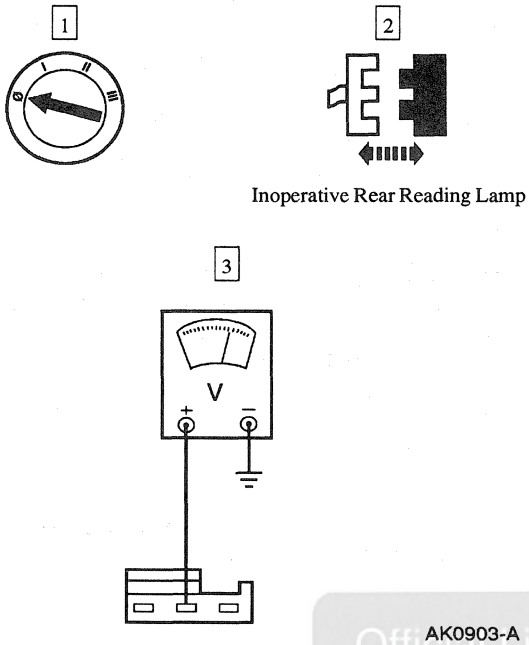	3 Measure the voltage between inoperative rear reading lamp C900 (LH) or C905 (RH), circuit 54 (LG/Y), and ground. • Is the voltage greater than 10 volts? → **Yes** GO to **J5**. → **No** REPAIR circuit 54 (LG/Y). TEST the system for normal operation.
J5 CHECK THE INOPERATIVE REAR READING LAMP GROUND — CIRCUIT 57 (BK)	
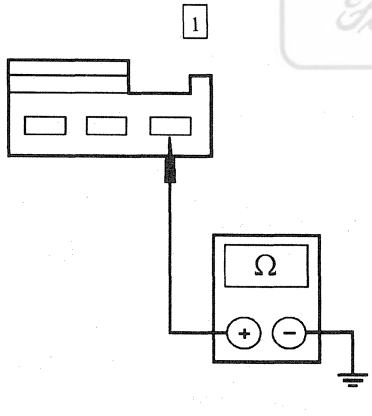	1 Measure the resistance between inoperative rear reading lamp C900 (LH) or C905 (RH), circuit 57 (BK), and ground. • Is the resistance less than 5 ohms? → **Yes** REPLACE the inoperative rear reading lamp. TEST the system for normal operation. → **No** REPAIR circuit 57 (BK). TEST the system for normal operation.

Official Licensed Product Ford Motor Company

(Continued)

DIAGNOSIS AND TESTING (Continued)

PINPOINT TEST J: AN INDIVIDUAL DEMAND LIGHTING LAMP IS INOPERATIVE (Continued)

TEST CONDITIONS	TEST DETAILS/RESULTS/ACTIONS
J6 CHECK FOR VOLTAGE TO THE GLOVE BOX LAMP — CIRCUIT 54 (LG/Y)	
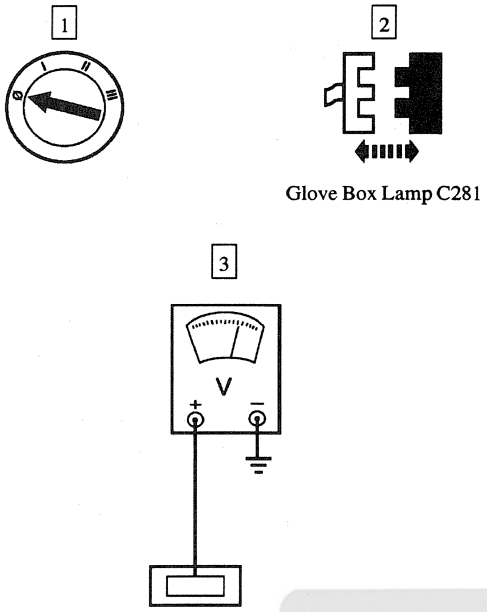 AK0930-A	3 Measure the voltage between glove box lamp C281, circuit 54 (LG/Y), and ground. • Is the voltage greater than 10 volts? → **Yes** REPLACE the glove box lamp. TEST the system for normal operation. → **No** REPAIR circuit 54 (LG/Y). TEST the system for normal operation.
J7 CHECK FOR VOLTAGE TO THE INOPERATIVE VANITY MIRROR LAMP — CIRCUIT 54 (LG/Y)	
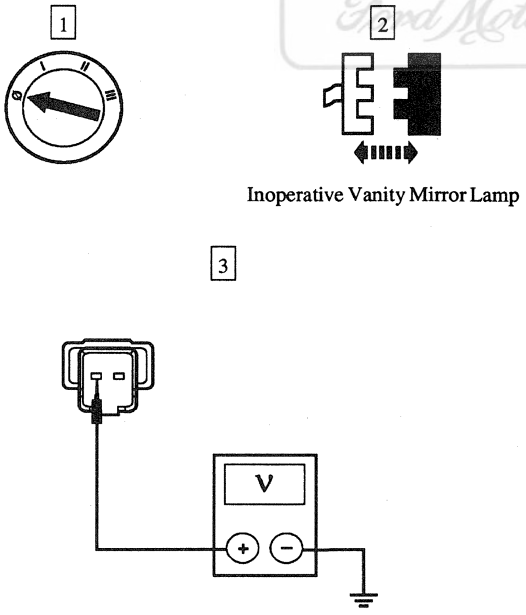 GK4922-A	3 Measure the voltage between inoperative vanity mirror lamp C909 (LH) or C908 (RH), circuit 54 (LG/Y), and ground. • Is the voltage greater than 10 volts? → **Yes** GO to **J8**. → **No** REPAIR circuit 54 (LG/Y). TEST the system for normal operation.

Official Licensed Product Ford Motor Company

(Continued)

DIAGNOSIS AND TESTING (Continued)

PINPOINT TEST J: AN INDIVIDUAL DEMAND LIGHTING LAMP IS INOPERATIVE (Continued)

TEST CONDITIONS	TEST DETAILS/RESULTS/ACTIONS
J8 CHECK THE INOPERATIVE VANITY MIRROR LAMP GROUND — CIRCUIT 57 (BK)	
1 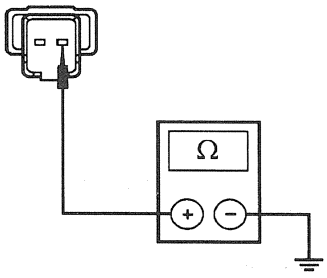 GK4919-A	1 Measure the resistance between inoperative vanity mirror lamp C909 (LH) or C908 (RH), circuit 57 (BK), and ground. • Is the resistance less than 5 ohms? → **Yes** REPLACE the inside visor . TEST the system for normal operation. → **No** REPAIR circuit 57 (BK). TEST the system for normal operation.
J9 CHECK THE TRUNK LID RELEASE GROUND CIRCUIT — MONITOR THE SCIL PID DECKLID	
1 2 3 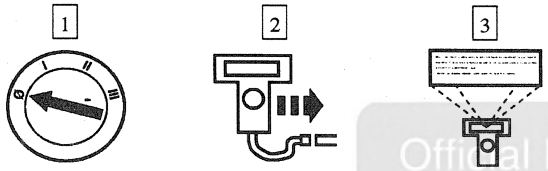 NGS	3 Monitor the SCIL PID DECKLID while opening and closing the trunk. • Does the PID indicate AJAR when the trunk is open and CLOSED when the trunk is closed? → **Yes** GO to **J10**. → **No** REFER to Section 501-14A.
J10 CHECK FOR VOLTAGE TO THE TRUNK LID LAMP — CIRCUIT 54 (LG/Y)	
1 2 Trunk Lid Lamp C444 3 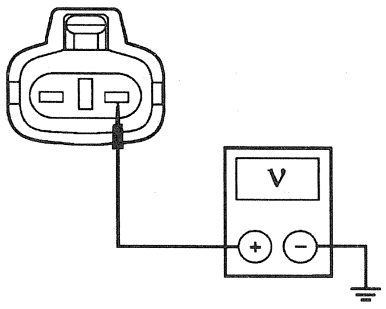 GK4920-A	3 Measure the voltage between trunk lid lamp C444, circuit 54 (LG/Y), and ground. • Is the voltage greater than 10 volts? → **Yes** GO to **J11**. → **No** REPAIR circuit 54 (LG/Y). TEST the system for normal operation.

Official Licensed Product
Ford Motor Company

(Continued)

DIAGNOSIS AND TESTING (Continued)

PINPOINT TEST J: AN INDIVIDUAL DEMAND LIGHTING LAMP IS INOPERATIVE (Continued)

TEST CONDITIONS	TEST DETAILS/RESULTS/ACTIONS
J11 CHECK THE TRUNK LID LAMP GROUND — CIRCUIT 707 (W/Y)	
1 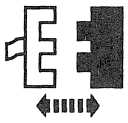 Trunk Lid Release Solenoid C426 2 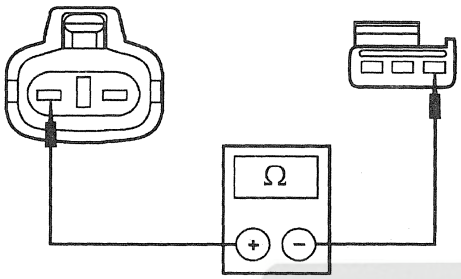 GK6162-A	2 Measure the resistance between trunk lid lamp C444, circuit 707 (W/Y), and trunk lid release solenoid C426, circuit 707 (W/Y). • Is the resistance less than 5 ohms? → **Yes** REPLACE the trunk lid lamp. TEST the system for normal operation. → **No** REPAIR circuit 707 (W/Y). TEST the system for normal operation.

Official Licensed Product
Ford Motor Company

DIAGNOSIS AND TESTING (Continued)

PINPOINT TEST K: THE BATTERY SAVER DOES NOT DEACTIVATE AFTER TIMEOUT

TEST CONDITIONS	TEST DETAILS/RESULTS/ACTIONS
K1 RETRIEVE THE DTCS	
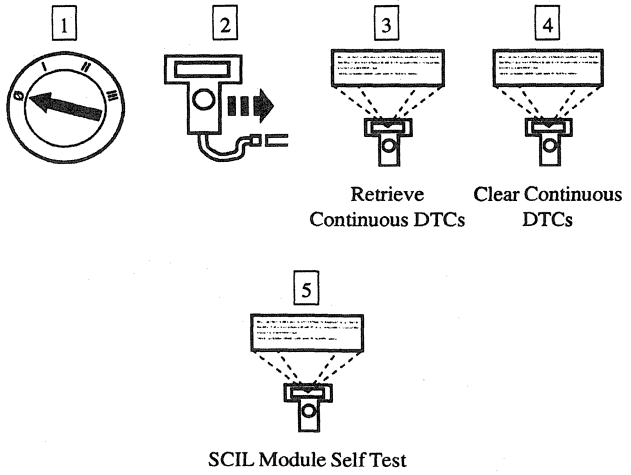	• Are any DTCs retrieved? → **Yes** If DTC B1360, GO to **K6**. If DTC B1364, GO to **K4**. → **No** GO to **K2**.
K2 CHECK THE IGNITION STATES — MONITOR THE SCIL PID IGN__SCI	
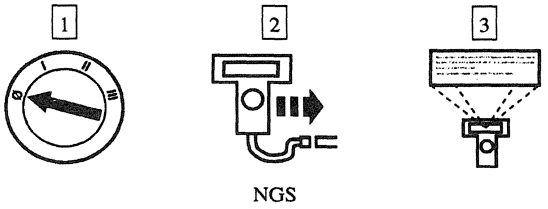	3 Monitor the SCIL PID IGN__SCI while turning the ignition switch through the START, RUN, OFF, and ACC positions. • Do the PID values agree with the ignition switch positions? → **Yes** GO to **K3**. → **No** GO to **K4**.
K3 CHECK THE INTERIOR LIGHTING TIME-OUT	
	1 Turn the I/P dimming switch to the DOME position.

(Continued)

Official Licensed Product

DIAGNOSIS AND TESTING (Continued)

PINPOINT TEST K: THE BATTERY SAVER DOES NOT DEACTIVATE AFTER TIMEOUT (Continued)

TEST CONDITIONS	TEST DETAILS/RESULTS/ACTIONS
K3 CHECK THE INTERIOR LIGHTING TIME-OUT (Continued)	
	2 Wait 10 minutes. • Do the interior lamps turn off after 10 minutes? → **Yes** The system is OK. → **No** REPLACE the SCIL module; REFER to Section 419-10. TEST the system for normal operation.
K4 CHECK THE IGNITION SWITCH FOR SHORT TO POWER	
1 2 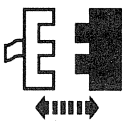 SCIL Module C288 3 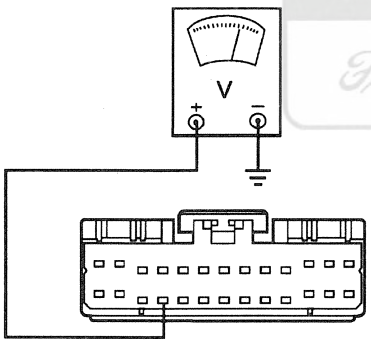 AK0935-B	3 Measure the voltage between SCIL module C288-17, circuit 640 (R/Y), and ground. • Is the voltage greater than 10 volts? → **Yes** GO to **K5**. → **No** GO to **K6**.

Official Licensed Product
Ford Motor Company

(Continued)

DIAGNOSIS AND TESTING (Continued)

PINPOINT TEST K: THE BATTERY SAVER DOES NOT DEACTIVATE AFTER TIMEOUT (Continued)

TEST CONDITIONS	TEST DETAILS/RESULTS/ACTIONS
K5 CHECK CIRCUIT 640 (R/Y) FOR SHORT TO POWER	
1 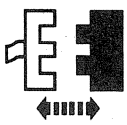 Ignition Switch C299 2 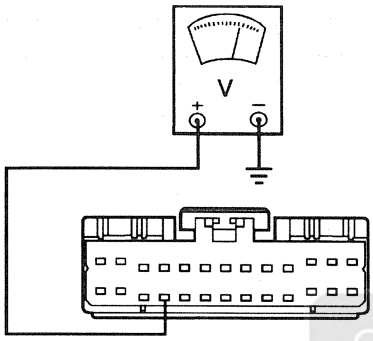 AK0935-B	2 Measure the voltage between SCIL module C288-17, circuit 640 (R/Y), and ground. • Is the voltage greater than 10 volts? → **Yes** REPAIR circuit 640 (R/Y). TEST the system for normal operation. → **No** REPLACE the ignition switch. REFER to Section 211-05. TEST the system for normal operation.
K6 CHECK THE SCIL MODULE FOR SHORT TO POWER	
1 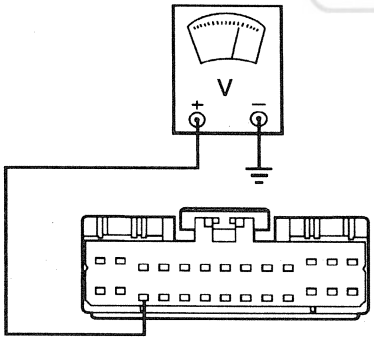 AK0936-B	1 Measure the voltage between SCIL module C288-16, circuit 251 (BR/O), and ground. • Is the voltage greater than 10 volts? → **Yes** GO to **K7**. → **No** REPLACE the SCIL module; REFER to Section 419-10. TEST the system for normal operation.

Official Licensed Product
Ford Motor Company

(Continued)

DIAGNOSIS AND TESTING (Continued)

PINPOINT TEST K: THE BATTERY SAVER DOES NOT DEACTIVATE AFTER TIMEOUT (Continued)

TEST CONDITIONS	TEST DETAILS/RESULTS/ACTIONS
K7 CHECK CIRCUIT 251 (BR/O) FOR SHORT TO POWER	
1 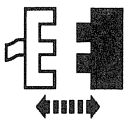 Ignition Switch C299 2 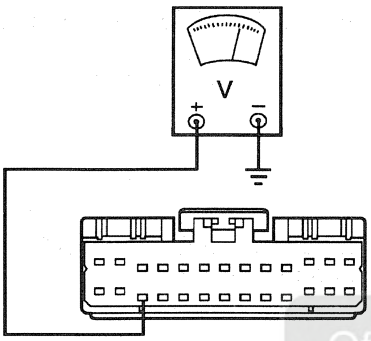 AK0936-B	2 Measure the voltage between SCIL module C288-16, circuit 251 (BR/O), and ground. • Is the voltage greater than 10 volts? → **Yes** REPAIR circuit 251 (BR/O). TEST the system for normal operation. → **No** REPLACE the ignition switch; REFER to Section 211-05. TEST the system for normal operation.

Official Licensed Product

PINPOINT TEST L: THE COURTESY LAMPS DO NOT TURN ON WITH ONE DOOR OPEN — DRIVER OR PASSENGER DOOR

TEST CONDITIONS	TEST DETAILS/RESULTS/ACTIONS
L1 CHECK THE DRIVER DOOR INPUT — MONITOR THE DDM PID D__DR__DD	
1 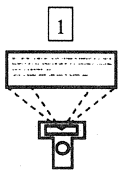	1 Monitor the DDM PID D__DR__DD while opening the driver door. • Does the DDM PID D__DR__DD indicate AJAR? → **Yes** GO to **L5**. → **No** GO to **L2**.

(Continued)

DIAGNOSIS AND TESTING (Continued)

PINPOINT TEST L: THE COURTESY LAMPS DO NOT TURN ON WITH ONE DOOR OPEN — DRIVER OR PASSENGER DOOR (Continued)

TEST CONDITIONS	TEST DETAILS/RESULTS/ACTIONS
L2 CHECK CIRCUIT 875 (BK/LB) FOR OPEN	
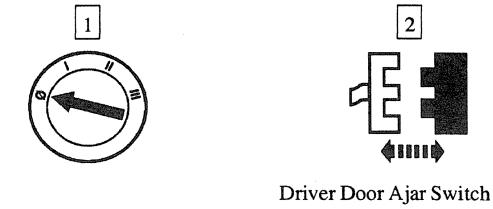 Driver Door Ajar Switch C503 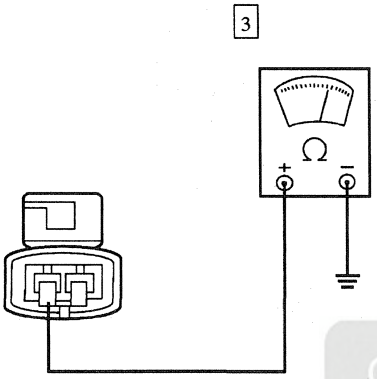 AR0796-A	3 Measure the resistance between driver door ajar switch C503, circuit 875 (BK/LB), and ground. • Is the resistance less than 5 ohms? → **Yes** GO to **L3**. → **No** REPAIR circuit 875 (BK/LB). TEST the system for normal operation.
L3 CHECK THE DRIVER DOOR AJAR SWITCH FOR PROPER OPERATION	
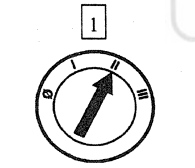 2 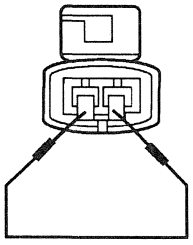 AR0797-A	2 Connect a jumper between driver door ajar switch C503, circuit 875 (BK/LB), and circuit 627 (BK/O).

Official Licensed Product
Ford Motor Company

(Continued)

DIAGNOSIS AND TESTING (Continued)

PINPOINT TEST L: THE COURTESY LAMPS DO NOT TURN ON WITH ONE DOOR OPEN — DRIVER OR PASSENGER DOOR (Continued)

TEST CONDITIONS	TEST DETAILS/RESULTS/ACTIONS
L3 CHECK THE DRIVER DOOR AJAR SWITCH FOR PROPER OPERATION (Continued)	
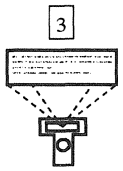	3 Monitor the DDM PID D__DR__DD. • Does the DDM PID D__DR__DD indicate AJAR? → **Yes** REPLACE the driver door ajar switch. TEST the system for normal operation. → **No** GO to **L4**.
L4 CHECK CIRCUIT 627 (BK/O) FOR OPEN	
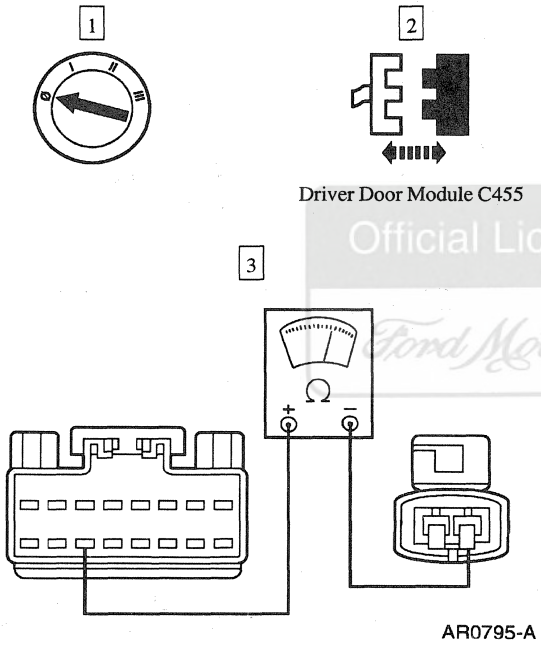	3 Measure the resistance between driver door module C455-11, circuit 627 (BK/O), and driver door ajar switch C503, circuit 627 (BK/O). • Is the resistance less than 5 ohms? → **Yes** REPLACE the driver door module. REFER to Section 419-10. TEST the system for normal operation. → **No** REPAIR circuit 627 (BK/O). TEST the system for normal operation.
L5 CHECK THE PASSENGER DOOR INPUT — MONITOR THE SCIL PID P__DR__SW	
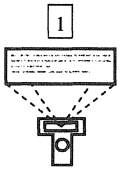	1 Monitor the SCIL PID P__DR__SW while opening the passenger door. • Does the SCIL PID P__DR__SW indicate AJAR? → **Yes** REFER to Section 501-14B. → **No** GO to **L6**.

Official Licensed Product
Ford Motor Company

(Continued)

DIAGNOSIS AND TESTING (Continued)

PINPOINT TEST L: THE COURTESY LAMPS DO NOT TURN ON WITH ONE DOOR OPEN — DRIVER OR PASSENGER DOOR (Continued)

TEST CONDITIONS	TEST DETAILS/RESULTS/ACTIONS
L6 CHECK PASSENGER DOOR AJAR SWITCH GROUND CIRCUIT	
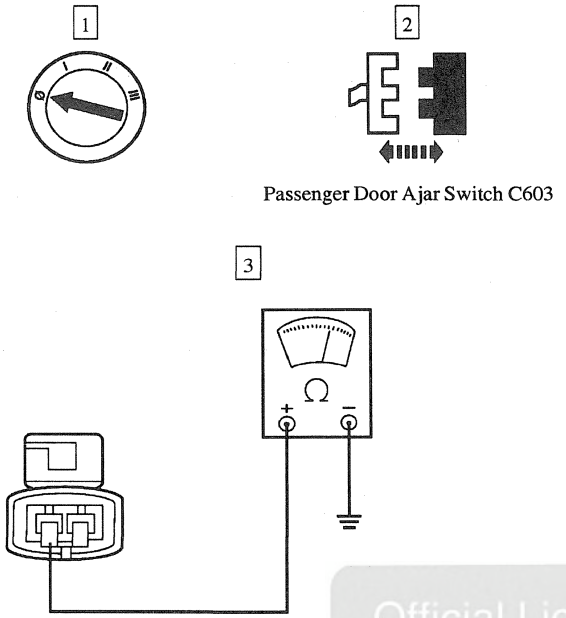	3 Measure the resistance between the passenger door ajar switch C603, circuit 875 (BK/LB), and ground. • Is the resistance less than 5 ohms? → **Yes** GO to **L7**. → **No** REPAIR circuit 875 (BK/LB). TEST the system for normal operation.
L7 CHECK THE PASSENGER DOOR AJAR SWITCH FOR PROPER OPERATION	
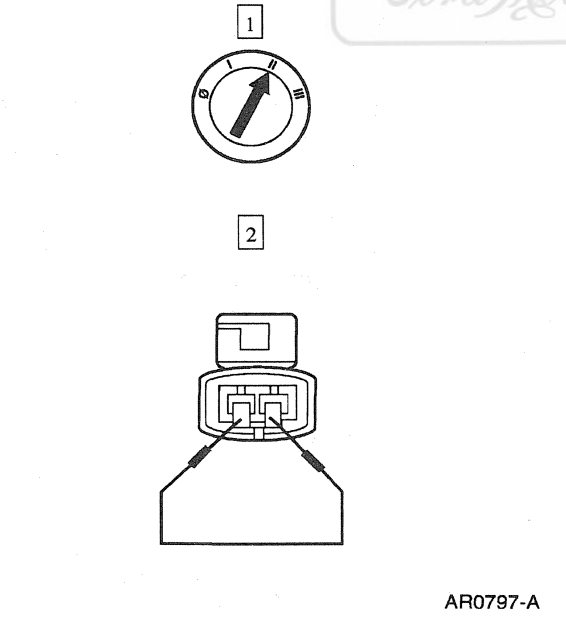	2 Connect a jumper between passenger door ajar switch C603, circuit 875 (BK/LB), and circuit 334 (BK/Y).

Official Licensed Product
Ford Motor Company

(Continued)

DIAGNOSIS AND TESTING (Continued)

PINPOINT TEST L: THE COURTESY LAMPS DO NOT TURN ON WITH ONE DOOR OPEN — DRIVER OR PASSENGER DOOR (Continued)

TEST CONDITIONS	TEST DETAILS/RESULTS/ACTIONS
L7 CHECK THE PASSENGER DOOR AJAR SWITCH FOR PROPER OPERATION (Continued)	
3 	3 Monitor the SCIL PID P__DR__SW. • Does the SCIL PID P__DR__SW indicate AJAR? → **Yes** REPLACE the passenger door ajar switch. TEST the system for normal operation. → **No** GO to **L8**.
L8 CHECK CIRCUIT 344 (BK/Y) FOR OPEN	
1 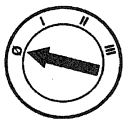 2 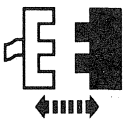 SCIL Module C286 3 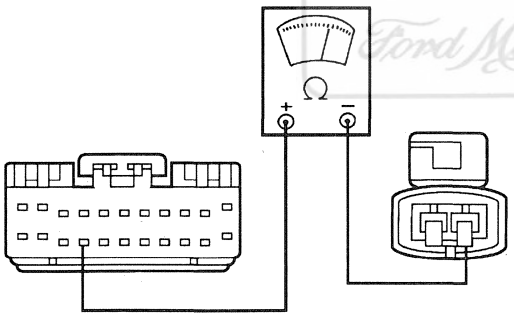 AR0794-A	3 Measure the resistance between SCIL module C286-15, circuit 344 (BK/Y), and passenger door ajar switch C603, circuit 344 (BK/Y). • Is the resistance less than 5 ohms? → **Yes** REPLACE the SCIL module; REFER to Section 419-10. TEST the system for normal operation. → **No** REPAIR circuit 344 (BK/Y). TEST the system for normal operation.

Official Licensed Product Ford Motor Company

DIAGNOSIS AND TESTING (Continued)

PINPOINT TEST M: NO COMMUNICATION WITH THE MODULE — DRIVER DOOR MODULE

TEST CONDITIONS	TEST DETAILS/RESULTS/ACTIONS
M1 CHECK FUSE JUNCTION PANEL FUSE 41 (10A)	
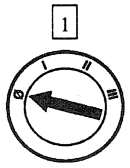 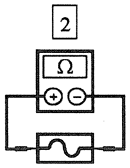 Fuse 41 (10A)	• Is the fuse OK? → **Yes** REINSTALL the fuse. GO to **M2**. → **No** REPLACE the fuse in question. TEST the system for normal operation. If the fuse fails again, CHECK for a short to ground. REPAIR as necessary.
M2 CHECK THE VOLTAGE TO THE DRIVER DOOR MODULE (DDM)	
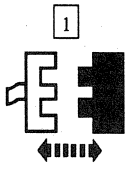 DDM 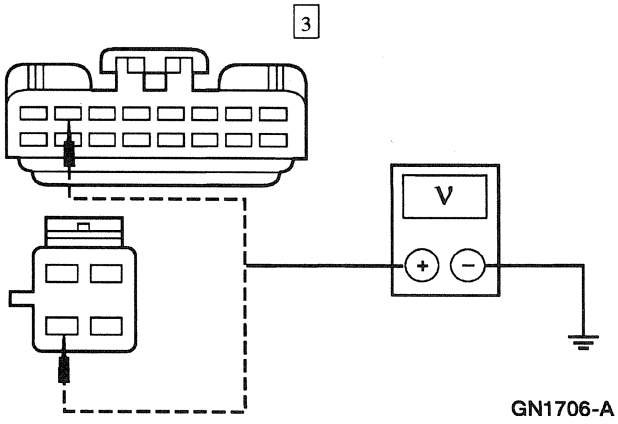	3 Measure the voltage between driver door module (DDM) C455-2, circuit 1077 (DG/P), and ground; and DDM C457-3, circuit 1077 (DG/P), and ground. • Are the voltages greater than 10 volts? → **Yes** GO to **M3**. → **No** REPAIR circuit 1077 (DG/P). TEST the system for normal operation.

Ford Motor Company Official Licensed Product

(Continued)

DIAGNOSIS AND TESTING (Continued)

PINPOINT TEST M: NO COMMUNICATION WITH THE MODULE — DRIVER DOOR MODULE (Continued)

TEST CONDITIONS	TEST DETAILS/RESULTS/ACTIONS
M3 CHECK CIRCUITS 57 (BK) AND 875 (BK/LB) FOR OPEN	
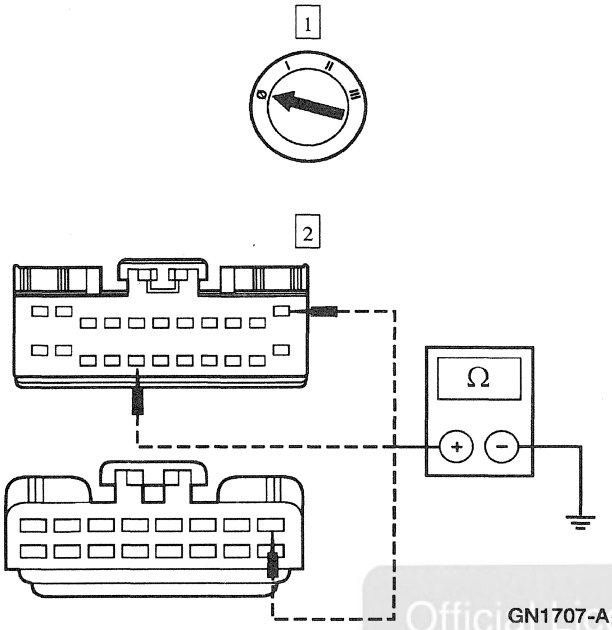 GN1707-A	2 Measure the resistance between DDM C456-16, circuit 57 (BK), and ground; and between C456-11, circuit 57 (BK) and ground; and between C455-8, circuit 875 (BK/LB) and ground. • Are the resistances less than 5 ohms? → **Yes** REFER to Section 418-00. → **No** REPAIR the circuit in question. TEST the system for normal operation.

Official Licensed Product Ford Motor Company

REMOVAL AND INSTALLATION

Lamp Assembly — Dome/Map Combination

Removal

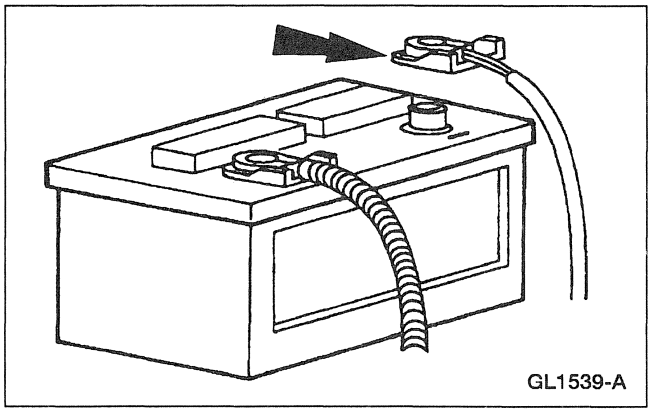

1. Disconnect battery ground cable (14301) .

REMOVAL AND INSTALLATION (Continued)

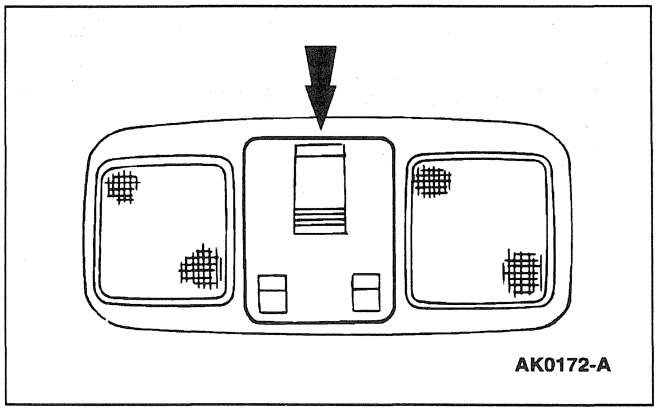

2. Carefully pry out the interior lamp switch bezel (13B739).

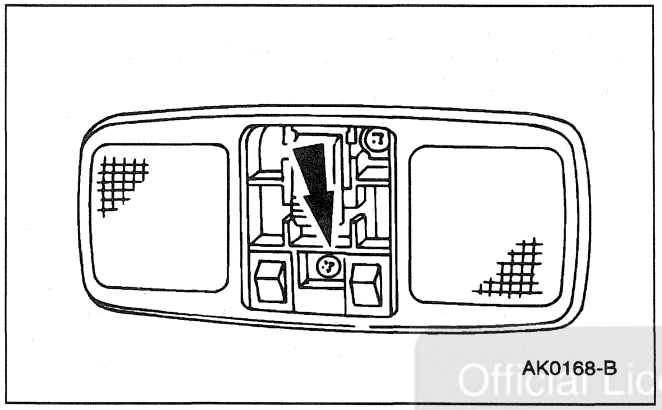

3. Remove the screws retaining the interior lamp (13776).

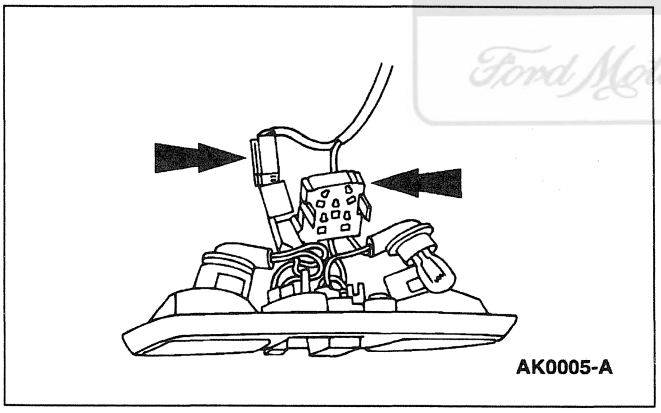

4. Disconnect the electrical connectors.

Official Licensed Product
Ford Motor Company

REMOVAL AND INSTALLATION (Continued)

Installation

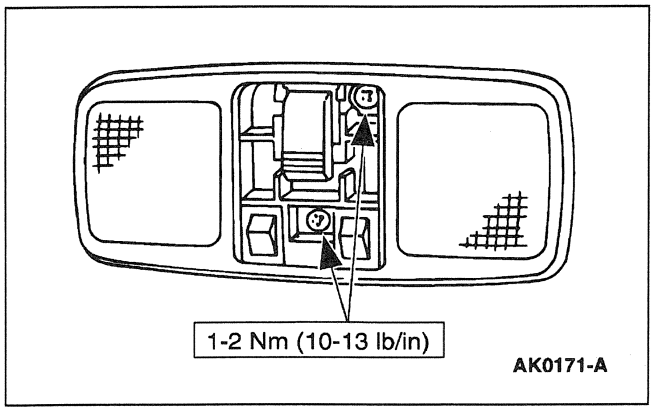

1. **NOTE:** When the battery is disconnected and reconnected, some abnormal drive symptoms may occur while the vehicle relearns its adaptive strategy. The vehicle may need to be driven 16 km (10 mi) or more to relearn the strategy.

   To install, reverse the removal procedure.

Lamp Assembly — Courtesy (Door)

Removal

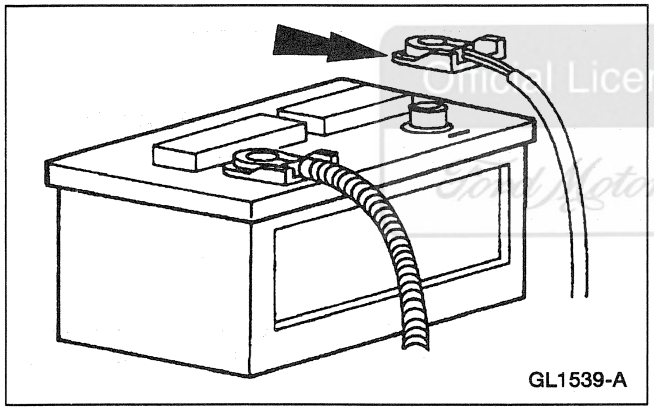

1. Disconnect the battery ground cable (14301).

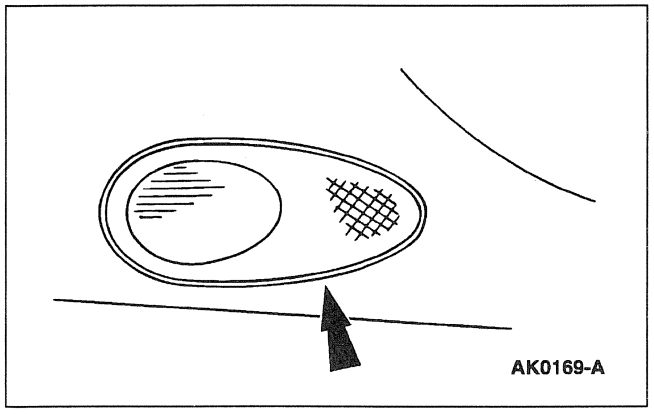

2. Carefully pry out the interior lamp lens (13734).

Official Licensed Product Ford Motor Company

REMOVAL AND INSTALLATION (Continued)

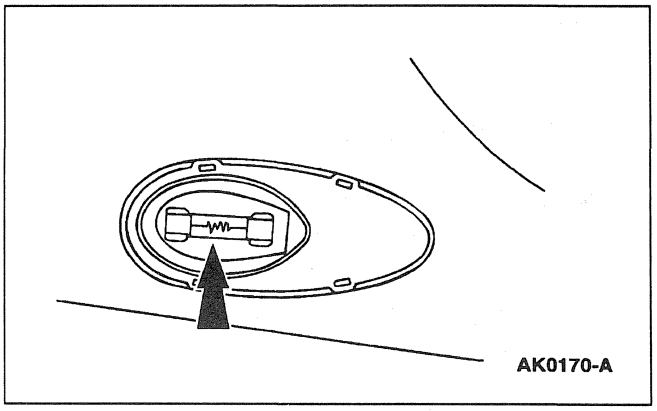

3. Remove the miniature bulb (13466) .

Installation

1. **NOTE:** When the battery is disconnected and reconnected, some abnormal drive symptoms may occur while the vehicle relearns its adaptive strategy. The vehicle may need to be driven 16 km (10 mi) or more to relearn the strategy.

   To install, reverse the removal procedure.

Official Licensed Product
Ford Motor Company

Lamp Assembly — Outside Rear View Mirror Ground Illumination

Removal

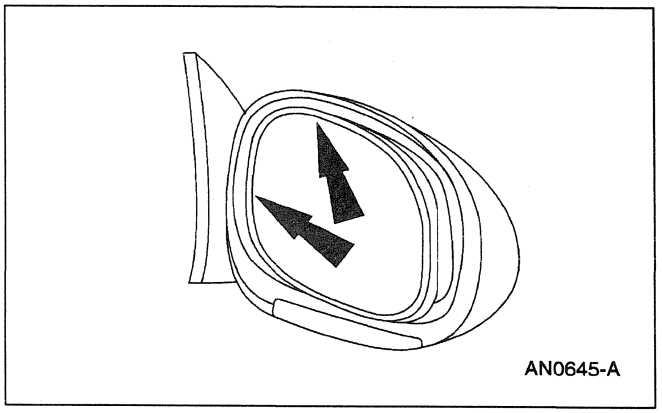

1. Push the top and the inside edges of the outside rear view mirror glass (17K707) to the maximum travel.

REMOVAL AND INSTALLATION (Continued)

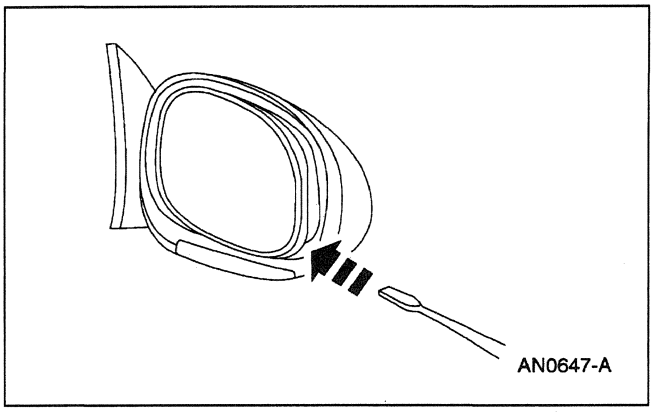

2. Insert a long, thin-blade standard screwdriver behind the outside rear view mirror glass and under the ground illumination lamp housing retaining clip.

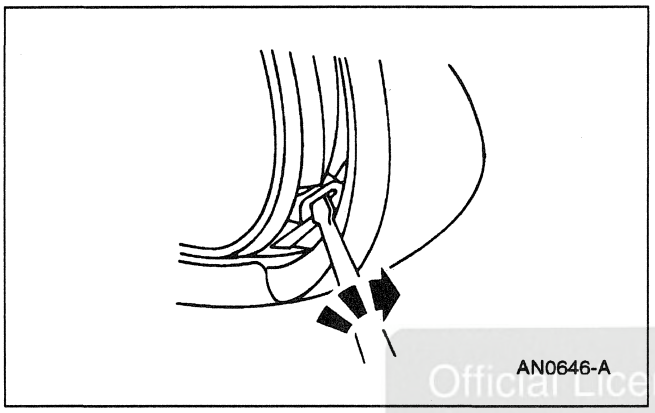

3. Turn the screwdriver (counterclockwise for the driver side or clockwise for the passenger side) to disengage the retaining clip and release the ground illumination lamp housing from the outside rear view mirror (17682).

Official Licensed Product
Ford Motor Company

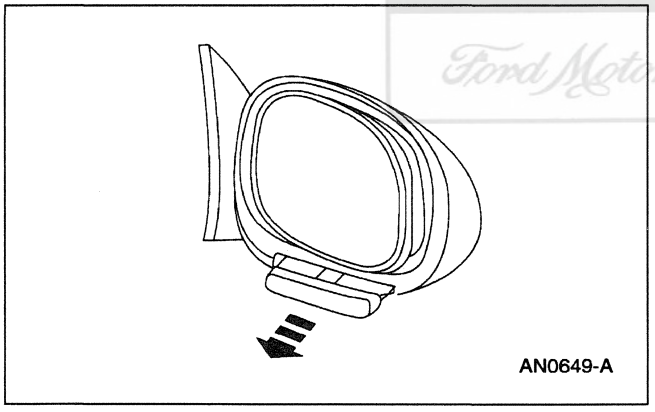

4. Disconnect the turn signal wires and ground illumination lamp socket and remove the ground illumination lamp housing.

Installation

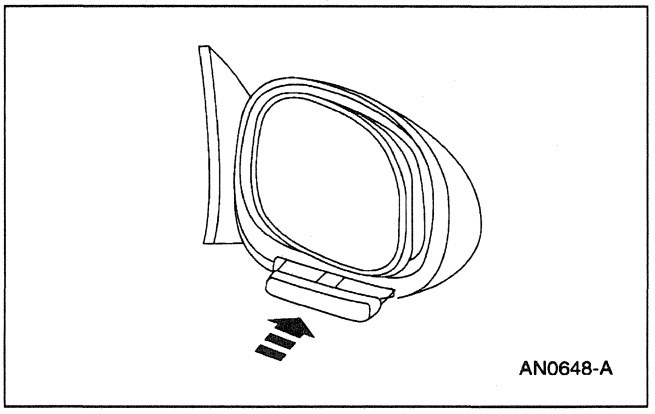

1. Install the ground illumination lamp housing.
   - Connect the turn signal wires and the ground illumination lamp socket.
   - Slide the ground illumination lamp housing into the outside rear view mirror until it snaps into place.

SPECIFICATIONS

Torque Specifications

Description	Nm	Lb/In
Battery Ground Cable	7-10	62-89
Dome Lamp Retaining Screws	1-2	10-13

Official Licensed Product
Ford Motor Company

SECTION 417-04 Daytime Running Lamps

VEHICLE APPLICATION: Mark VIII

SUBJECT **PAGE**

DESCRIPTION AND OPERATION
Daytime Running Lamps (DRL) 417-04-2
DIAGNOSIS AND TESTING
Daytime Running Lamps (DRL) 417-04-3
Inspection and Verification 417-04-3
SCIL Active Command Index 417-04-6
SCIL Diagnostic Trouble Code (DTC) Index 417-04-4
SCIL Parameter Identification (PID) Index 417-04-5
Pinpoint Tests 417-04-8
Symptom Chart 417-04-7
REMOVAL AND INSTALLATION
Daytime Running Lamps (DRL) Control Module 417-04-17
SPECIFICATIONS 417-04-17

Official Licensed Product
Ford Motor Company

DESCRIPTION AND OPERATION

Daytime Running Lamps (DRL)

Component Location

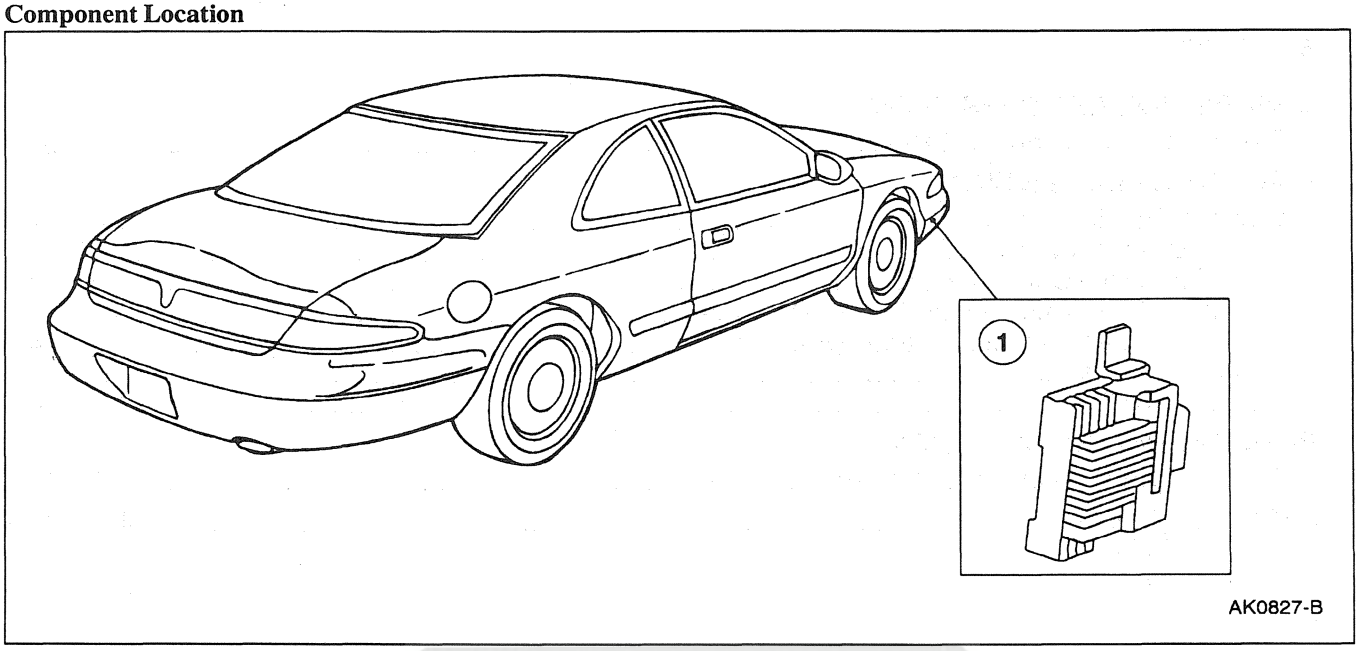

Item	Part Number	Description
1	15A272	Daytime Running Lamps Control Module

Official Licensed Product
Ford Motor Company

⚠ WARNING: DRL CONTROL MODULE GETS VERY HOT DURING OPERATION. BE SURE MODULE HAS COOLED BEFORE HANDLING IT OR PERSONAL INJURY MAY OCCUR.

The daytime running lamps (DRL) system is designed to turn the high-beam headlamps (13008) ON, with a reduced light output and without illuminating the high-beam indicator in the hybrid electronic instrument cluster, when the following conditions are met:

- The ignition switch is in the RUN position.
- The park brake is fully released.
- The headlamp switch (11654) is in the OFF or PARK lamp position.
- Transmission is not in the PARK position.

NOTE: The vehicle is equipped with an autolamp system. The DRL system is active until the autolamp system turns on the headlamps.

The DRL uses a daytime running lamps control (15A272) module.

DIAGNOSIS AND TESTING

Daytime Running Lamps (DRL)

Refer to Electrical and Vacuum Troubleshooting Manual, Cell 97, Daytime Running Lamps for schematic and connector information.

Special Tool(s)

ST1137-A	73 Digital Multimeter or equivalent 105-R0051
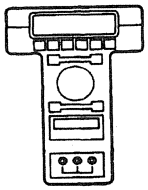 ST1217-A	New Generation Star (NGS) Tester or equivalent 007-00500

Inspection and Verification

1. Verify the customer concern by following these steps:
   1 Turn the ignition switch OFF.
   2 Turn the headlamp switch (11654) to the HEAD position.
   3 Check the low beam headlamp operation.
   4 Turn the high beam headlamps ON with the dimmer switch.
   5 Check the high beam operation.
   6 Check the high beam indicator located in the hybrid electronic instrument cluster for proper operation.
   7 Turn the high beam headlamps OFF.
   8 Turn the low beam headlamps OFF.
   9 **NOTE:** Refer to Section 417-01 to repair headlamp concerns before checking the daytime running lamps.

   Check the daytime running lamps system operation:

   - Turn the ignition switch to RUN.
   - Check for the high beam headlamps ON at reduced intensity.
   - **NOTE:** Do not apply the parking brake.

   Block the wheels; shift the transmission to NEUTRAL.
2. Inspect to determine if one of the following electrical concerns apply:

Visual Inspection Chart

Electrical
• Damaged bulbs. • Blown fuses. • Circuitry. • Damaged daytime running lamps control.

3. If the inspection reveals obvious concern(s) that can be readily identified, repair as necessary.
4. If the concern remains after the inspection, connect New Generation Star (NGS) Tester to the data link connector (DLC) located beneath the instrument panel to perform the Data Link Diagnostic Test; refer to Section 418-00. If NGS Tester responds with NO RESPONSE/NOT EQUIPPED for the Steering Column/Ignition/Lighting (SCIL) Module, go to Pinpoint Test A. If the Data Link Diagnostic Test is passed for the Steering Column/Ignition/Lighting Module, retrieve the continuous diagnostic trouble codes (DTCs) and execute Self-Test Diagnostics for the Steering Column/Ignition/Lighting Module; refer to Section 418-00.
5. If the self-test is passed and no DTCs are retrieved, proceed to Symptom Chart to continue diagnostics.
6. If DTCs are retrieved, go to the SCIL Module Diagnostic Trouble Code (DTC) Index to continue diagnostics.
7. If the Steering Column/Ignition/Lighting Module cannot be accessed by NGS Tester, go to Pinpoint Test A.

Official Licensed Product Ford Motor Company

DIAGNOSIS AND TESTING (Continued)

SCIL Diagnostic Trouble Code (DTC) Index

SCIL Diagnostic Trouble Code (DTC) Index

DTC	Description	DTC Caused By	Action
C1446	Brake Switch Circuit Failure	SCIL	REFER to Section 206-05.
B1246	Panel Dim Potentiometer Switch Circuit Failure	SCIL	REFER to Section 417-02.
B1312	Lamp Headlamp Input Circuit Short to Battery	SCIL	REFER to Section 417-01.
B1334	Luggage Compartment Door Ajar Circuit Short to Ground	SCIL	REFER to Section 417-02.
B1342	ECU is Defective	SCIL	REFER to Section 417-01.
B1353	Ignition Key-In Circuit Open	SCIL	REFER to Section 501-12.
B1360	Ignition Run/ACC Circuit Open	SCIL	REFER to Section 501-12.
B1364	Ignition Run/Start Circuit Open	SCIL	REFER to Section 501-12.
B1446	Wiper Park Sense Circuit Failure	SCIL	REFER to Section 417-01.
B1485	Brake Pedal Input Short to B+	SCIL	REFER to Section 417-01.
B1490	Right Front Door Handle Short to Ground	SCIL	This is an invalid DTC. Do not attempt to repair.
B1498	Luggage Compartment Door Punch Out Sensor Shorted to Ground	SCIL	This is an invalid DTC. Do not attempt to repair.
B1509	Flash-to-Pass Switch Circuit Short to Battery	SCIL	REFER to Section 417-01.
B1522	Hood Switch Circuit Short to Ground	SCIL	REFER to Section 419-01A.
B1562	Door Lock Cylinder Circuit Short to Ground	SCIL	REFER to Section 419-01A.
B1566	Door Ajar Circuit Short to Ground	SCIL	REFER to Section 417-02.
B1600	PATS Ignition Key Transponder Signal Is Not Received	SCIL	REFER to Section 419-01B.
B1601	PATS Received Incorrect Key Code From Ignition Key Transponder	SCIL	REFER to Section 419-01B.
B1676	Battery Voltage Out of Range	SCIL	REFER to Section 417-01.
B1682	PATS is Disabled (Check Link Between PATS and Transponder)	SCIL	REFER to Section 419-01B.
B1687	Dome Lamp Input Circuit Short to Battery	SCIL	REFER to Section 417-02.
B1689	Autolamp Delay Circuit Failure	SCIL	REFER to Section 417-01.
B1796	Headlamp Low Beam Circuit Short to Battery	SCIL	REFER to Section 417-01.
B1875	Turn Signal/Hazard Switch Signal Circuit Short to Battery	SCIL	REFER to Section 417-01.
B1980	Bulb Outage Condition Detected	SCIL	REFER to Section 417-01.
B2328	Steering Column Reach Feedback Potentiometer Circuit Failure	SCIL	REFER to Section 211-05.
B2332	Steering Column Tilt Feedback Potentiometer Circuit Failure	SCIL	REFER to Section 211-05.
B2351	Steering Column Switch Signal Circuit Failure	SCIL	REFER to Section 211-05.
U1027	SCP Invalid or Missing Data for Engine RPM	PCM	PERFORM the PCM Self-Test.

(Continued)

DIAGNOSIS AND TESTING (Continued)

SCIL Diagnostic Trouble Code (DTC) Index

DTC	Description	DTC Caused By	Action
U1041	SCP Invalid or Missing Data for Vehicle Speed	ABS	PERFORM the ABS Self-Test.
U1057	SCP Invalid or Missing Data for Vehicle Configuration	SCIL	PERFORM the SCIL Self-Test.
U1059	SCP Invalid or Missing Data for Transmission/Transaxle/PRNDL	PCM	PERFORM the PCM Self-Test.
U1123	SCP Invalid or Missing Data for Odometer	ABS	PERFORM the ABS Self-Test.
U1147	SCP Invalid or Missing Data for Vehicle Security	PCM	PERFORM the PCM Self-Test.
U1180	SCP Invalid or Missing Data for Personalization (Memory) Features	DDM	PERFORM the DDM Self-Test.
U1181	SCP Invalid or Missing Data for Personalization (Memory) Features	DDM	PERFORM the DDM Self-Test.
U1197	SCP Invalid or Missing Data for Door Locks	DDM	PERFORM the DDM Self-Test.
U1198	SCP Invalid or Missing Data for External Access (Doors)	DDM	PERFORM the DDM Self-Test.
U1199	SCP Invalid or Missing Data for External Access (Doors)	DDM	PERFORM the DDM Self-Test.
U1211	SCP Invalid or Missing Data for Restraints	DSM	PERFORM the DSM Self-Test.
U1222	SCP Invalid or Missing Data for Interior Lamps	DDM	PERFORM the DDM Self-Test.

Official Licensed Product
Ford Motor Company

SCIL Parameter Identification (PID) Index

SCIL Parameter Identification Index

PID	Description	Expected Values
CCNTSCI	Number of Continuous DTCs on SCIL	one count per bit
BOO__SCI	Brake Switch Input	ON, OFF
PRK__BRK	Parking Brake Switch Input	ON, OFF
TILT	Steering Column Tilt Switch	SHORT, UP, DOWN, OFF
TELESCP	Steering Column Telescope Switch	SHORT, IN, OUT, OFF
TILTPOS	Tilt Position Sensor	SENSED, notSEN
TELEPOS	Telescope Position Sensor	SENSED, notSEN
TURN__SW	Left and Right Turn Signal Switch	OFF, LEFT, RIGHT, SHORT
LBEAMSW	Low Beam Switch	ON, OFF
HBEAMSW	High Beam Switch	ON, OFF
PARK__SW	Parking Lamp Switch	ON, OFF
LIGHTSN	Ambient Light	DAY, NIGHT
FLASH	Flash to Pass Switch	ON, OFF
FTURN__L	Left and Right Front Turn Lamp	R__OPEN, L__OPEN, L/R__OPEN OK
RTURN__L	Left and Right Rear Turn Lamp	R__OPEN, L__OPEN, L/R__OPEN OK
TAILLMP	Left and Right Tail Lamp	OPEN, OK
LOWBEAM	Low Beam Lamp	R__OPEN, L__OPEN, L/R__OPEN OK
AUTOLMP	Autolamp Switch	ON, OFF

(Continued)

DIAGNOSIS AND TESTING (Continued)

SCIL Parameter Identification Index

PID	Description	Expected Values
ALP__IMP	Autolamp Analog Input	0-100%
DOMESW	Dome Lamp Switch	ACTIVE, notACT
PANLDIM	Panel Dim Intensity Switch	0-100%
HOOD__SW	Hood Ajar Switch	AJAR, CLOSED
DECKLID	Decklid Ajar Switch	AJAR, CLOSED
P__DR__SW	Passenger Door Ajar Switch	AJAR, CLOSED
IGN__KEY	Ignition Key In/Out	IN, OUT
IGN__SCI	Ignition Switch	START, RUN, OFF, ACCSSY
WPPRKSW	Windshield Wiper Park Sense	notPRK, PARKED
NUMKEYS	Number of Ignition Key Codes Supported	BCD (valid range 0-16)
DRLKCYL	Door Lock Cylinder	ON, OFF
ENABLE	PATS System Status	ON, OFF
FAILSAF	PATS System Status	ON, OFF

SCIL Active Command Index

SCIL Active Command Index

Active Command	Display	Action
PID LATCH	PID LATCH	ON, OFF
ONE TOUCH WINDOW DWN & ACCY DELAY	ACCY RLY	ON, OFF
WARNING LAMPS AND CHIME	CHIME	ON, OFF
	ANTI-THEFT	ON, OFF
	AUTOLMP	ON, OFF
	HIGH BEAM	ON, OFF
INTERIOR COURTESY LAMPS	INT LAMPS MIRRORLMP	ON, OFF ON, OFF
DECKLID RELEASE	RELEASE	ON, OFF
TURN SIGNAL AND MARKER LAMPS	LF TURN	ON, OFF
	RF TURN	ON, OFF
	LR TURN	ON, OFF
	RR TURN	ON, OFF
	PARKLAMPS	ON, OFF
HEADLAMP CONTROL	LEFT LOW	ON, OFF
	RIGHT LOW	ON, OFF
	HIGH BEAM	ON, OFF
	DRUN LAMP	ON, OFF
	LF CORNER	ON, OFF
	RF CORNER	ON, OFF
HORN CONTROL	HORN	ON, OFF
BACKLIGHTING INTENSITY	INTENSITY	0%-100%
COURTESY LAMP INTENSITY	INTENSITY	0%-100%
DOOR AJAR SIGNAL	DOOR AJAR	ON, OFF
TRANSMIT SIGNAL COMMAND	TRANSMIT	ON, OFF

(Continued)

DIAGNOSIS AND TESTING (Continued)

SCIL Active Command Index

Active Command	Display	Action
BRAKE SYSTEM	BRK/SHIFT	ON, OFF
	PARK BRK	ON, OFF
STEERING COLUMN CONTROL	TILT UP	ONE SECOND TIME OUT
	TILT DOWN	ONE SECOND TIME OUT
	TELSCP IN	ONE SECOND TIME OUT
	TELSCPOUT	ONE SECOND TIME OUT
KEYCODE ERASE TIME SET	MINUTES	8-63 MINUTES

Symptom Chart

Symptom Chart

Condition	Possible Source	Action
• No Communication With The Steering Column/Ignition/Lighting Module	• Circuitry. • SCIL Module.	• GO to Pinpoint Test A.
• The Daytime Running Lamps Are Inoperative	• Daytime running lamps control. • SCIL module. • Circuitry.	• GO to Pinpoint Test B.
• The Daytime Running Lamps Are On With the Ignition Switch OFF	• Daytime running lamps control. • SCIL module. • Circuitry.	• GO to Pinpoint Test C.

Officially Licensed Product
Ford Motor Company

DIAGNOSIS AND TESTING (Continued)

Pinpoint Tests

PINPOINT TEST A: NO COMMUNICATION WITH THE STEERING COLUMN/IGNITION/LIGHTING MODULE

TEST CONDITIONS	TEST DETAILS/RESULTS/ACTIONS
A1 CHECK CIRCUIT 875 (BK/LB) FOR OPEN	
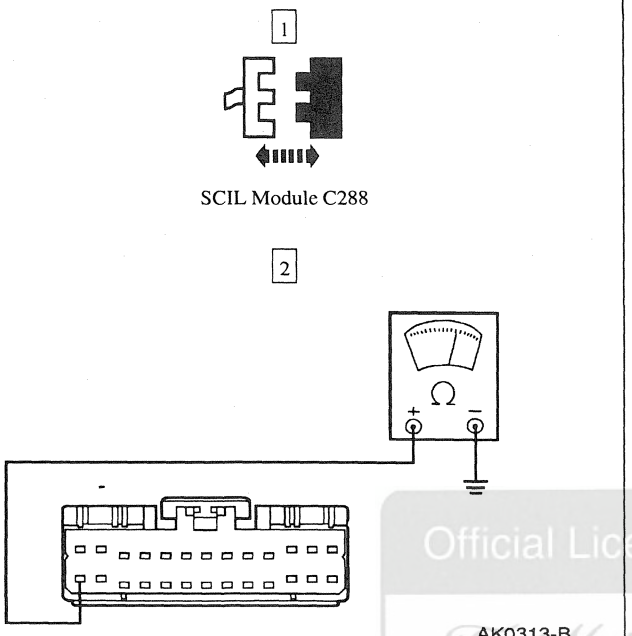	2 Measure the resistance between SCIL module C288-14, circuit 875 (BK/LB), and ground. • Is the resistance 5 ohms or less? → **Yes** GO to **A2.** → **No** REPAIR circuit 875 (BK/LB). TEST the system for normal operation.
A2 CHECK CIRCUIT 57 (BK) FOR OPEN	
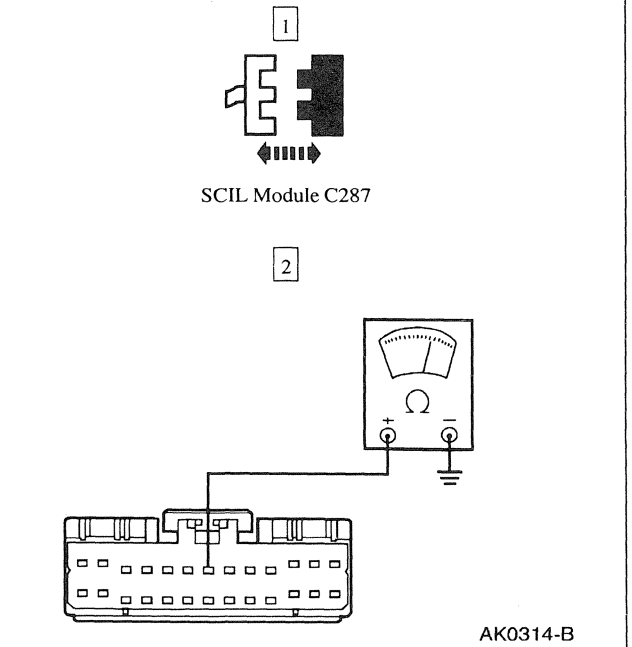	2 Measure the resistance between SCIL module C287-7, circuit 57 (BK), and ground. • Is the resistance 5 ohms or less? → **Yes** GO to **A3.** → **No** REPAIR circuit 57 (BK). TEST the system for normal operation.

(Continued)

Official Licensed Product Ford Motor Company

DIAGNOSIS AND TESTING (Continued)

PINPOINT TEST A: NO COMMUNICATION WITH THE STEERING COLUMN/IGNITION/LIGHTING MODULE (Continued)

TEST CONDITIONS	TEST DETAILS/RESULTS/ACTIONS
A3 CHECK FOR POWER SUPPLY TO SCIL MODULE C287	
1 2 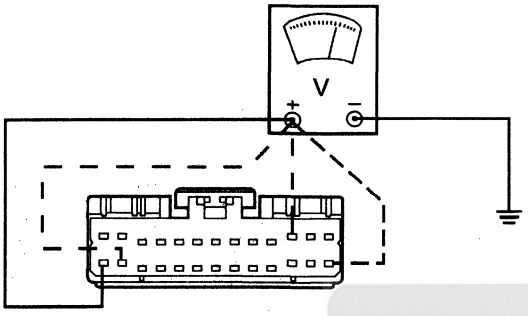 AK1260-A	2 Measure the voltage between each of the following SCIL module C287 pins and ground. Note the voltage reading at each pin. • C287-14, circuit 906 (R/O) • C287-26, circuit 19 (LB/R) • C287-15, circuit 1055 (W/LG) • C287-11, circuit 1056 (DB/LG) • Are the voltages greater than 10 volts? → **Yes** GO to **A4**. → **No** REPAIR the circuit in question. TEST the system for normal operation.
A4 CHECK FOR POWER SUPPLY TO SCIL MODULE C289	
1 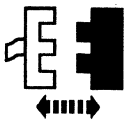 SCIL Module C289 2 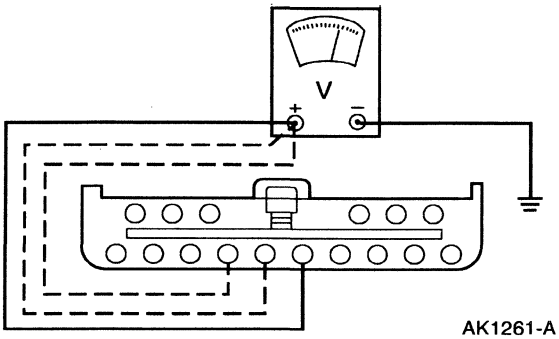 AK1261-A	2 Measure the voltage between each of the following SCIL module C289 pins and ground. Note the voltage reading at each pin: • C289-5, circuit 1058 (BR/W) • C289-6, circuit 1057 (O/BK) • C289-7, circuit 908 (PK/LG) • Are the voltages greater than 10 volts? → **Yes** GO to Section 418-00. → **No** REPAIR the circuit in question. TEST the system for normal operation.

Official Licensed Product

DIAGNOSIS AND TESTING (Continued)

PINPOINT TEST B: THE DAYTIME RUNNING LAMPS ARE INOPERATIVE

TEST CONDITIONS	TEST DETAILS/RESULTS/ACTIONS
B1 CHECK FOR DTCs	
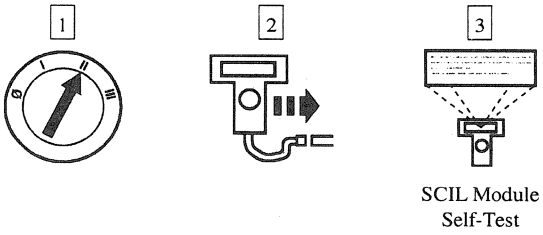 SCIL Module Self-Test	• Is DTC B1360, B1364, B1509, B1689, B1796, C1446 or U1059 retrieved? → **Yes** GO to the SCIL Diagnostic Trouble Code (DTC) Index to repair DTC(s). → **No** GO to **B2**.
B2 CHECK CIRCUIT 667 (W/R) FOR AN OPEN	
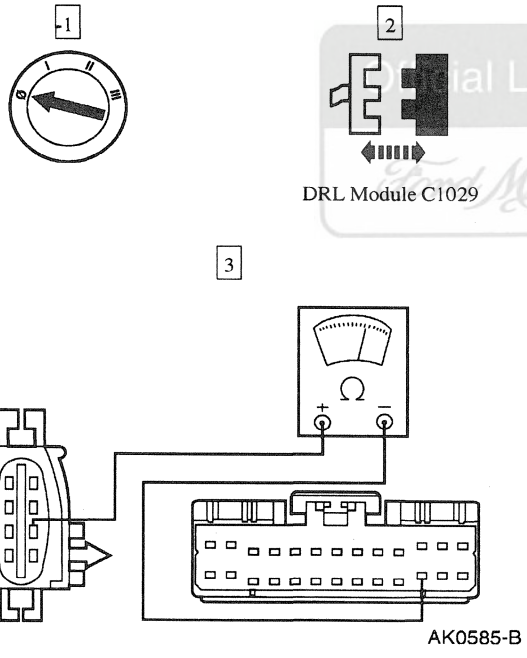	3 Measure the resistance between DRL module C1029-6 and SCIL module C288-24, circuit 667 (W/R). • Is the resistance 5 ohms or less? → **Yes** GO to **B3**. → **No** REPAIR circuit 667 (W/R). TEST the system for normal operation.

Official Licensed Product Ford Motor Company

(Continued)

DIAGNOSIS AND TESTING (Continued)

PINPOINT TEST B: THE DAYTIME RUNNING LAMPS ARE INOPERATIVE (Continued)

TEST CONDITIONS	TEST DETAILS/RESULTS/ACTIONS
B3 CHECK CIRCUIT 667 (W/R)	
1 2 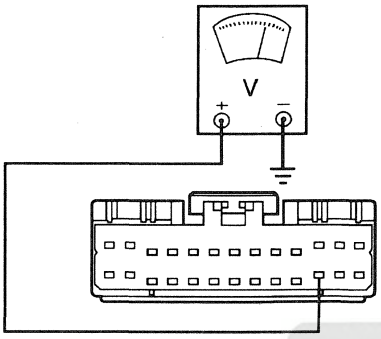 AK0584-B	2 Measure the voltage between SCIL module C288-24, circuit 667 (W/R) and ground. • Is the voltage greater than 10 volts? → **Yes** REPAIR circuit 667 (W/R). TEST the system for normal operation. → **No** GO to **B4**.
B4 CHECK THE SCIL MODULE	
1 2 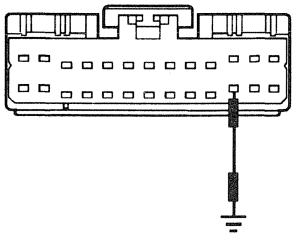 AK0583-B 3 	2 Connect a jumper between SCIL module C288-24, circuit 667 (W/R), and ground.

Official Licensed Product
Ford Motor Company

(Continued)

DIAGNOSIS AND TESTING (Continued)

PINPOINT TEST B: THE DAYTIME RUNNING LAMPS ARE INOPERATIVE (Continued)

TEST CONDITIONS	TEST DETAILS/RESULTS/ACTIONS
B4 CHECK THE SCIL MODULE (Continued)	
	• Do the daytime running lamps turn ON? → **Yes** REPLACE the SCIL module. TEST the system for normal operation. → **No** GO to **B5**.
B5 CHECK CIRCUIT 12 (LG/BK) FOR POWER	
1 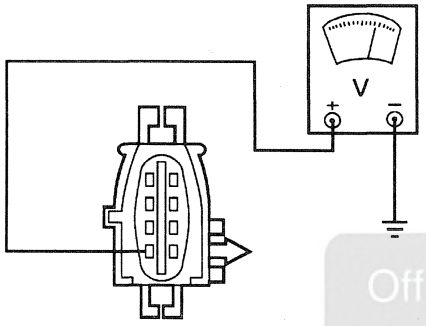 AK0587-B	1 Measure the voltage between DRL module C1029-7, circuit 12 (LG/BK), and ground. • Is the voltage greater than 10 volts? → **Yes** GO to **B6**. → **No** REPAIR circuit 12 (LG/BK). TEST the system for normal operation.
B6 CHECK CIRCUIT 1040 (R/BK) FOR POWER	
1 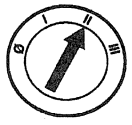 2 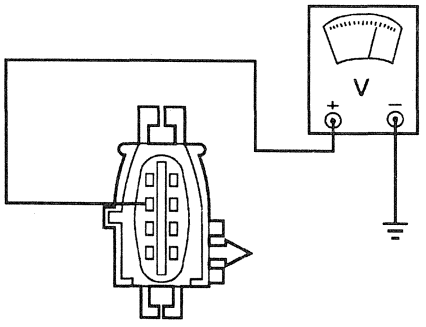 AK0588-B	2 Measure the voltage between DRL module C1029-3, circuit 1040 (R/BK), and ground. • Is the voltage greater than 10 volts? → **Yes** GO to **B9**. → **No** GO to **B7**.

Official Licensed Product Chrysler Company

(Continued)

DIAGNOSIS AND TESTING (Continued)

PINPOINT TEST B: THE DAYTIME RUNNING LAMPS ARE INOPERATIVE (Continued)

TEST CONDITIONS	TEST DETAILS/RESULTS/ACTIONS
B7 CHECK FUSE JUNCTION PANEL FUSE 34 (15A)	
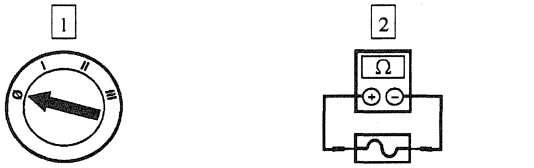 Fuse Junction Panel Fuse 34 (15A)	• Is the fuse OK? → **Yes** REPAIR circuit 1040 (R/BK). TEST the system for normal operation. → **No** GO to **B8**.
B8 CHECK CIRCUIT 1040 (R/BK) FOR A SHORT	
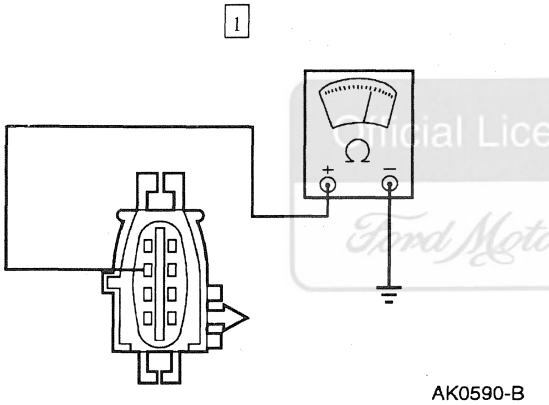 AK0590-B	1 Measure the resistance between DRL module C1029-3, circuit 1040 (R/BK), and ground. • Is the resistance 10K ohms or less? → **Yes** REPAIR circuit 1040 (R/BK). TEST the system for normal operation. → **No** REPLACE fuse junction panel fuse 34 (15A). TEST the system for normal operation. If the fuse blows again, REPLACE daytime running lamps control.

Official Licensed Product Ford Motor Company

(Continued)

DIAGNOSIS AND TESTING (Continued)

PINPOINT TEST B: THE DAYTIME RUNNING LAMPS ARE INOPERATIVE (Continued)

TEST CONDITIONS	TEST DETAILS/RESULTS/ACTIONS
B9 CHECK CIRCUIT 932 (GY/W) FOR OPEN	
1 SCIL Module C288 2 3 Select SCIL Module ACTIVE COMMANDS 4 Select HIGH BEAM 5 Command HIGH BEAM ON 6 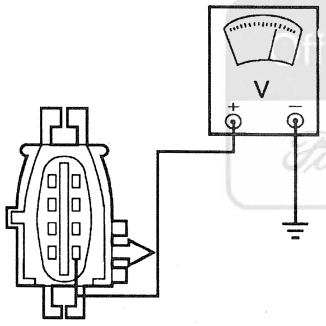 AK0589-B	6 Measure the voltage between the DRL module C1029-8, circuit 932 (GY/W), and ground. • Is the voltage greater than 10 volts? → **Yes** REPLACE the daytime running lamps control. TEST the system for normal operation. → **No** REPAIR circuit 932 (GY/W). TEST the system for normal operation.

Official Licensed Product Ford Motor Company

DIAGNOSIS AND TESTING (Continued)

PINPOINT TEST C: THE DAYTIME RUNNING LAMPS ARE ON WITH THE IGNITION SWITCH OFF

TEST CONDITIONS	TEST DETAILS/RESULTS/ACTIONS
C1 CHECK FOR DTCs	
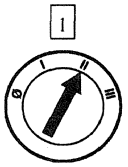 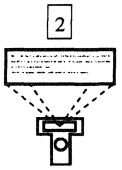 SCIL Module Self-Test	• Is DTC B1360, B1364, B1509, B1689, B1796, C1446 or U1059 retrieved? → **Yes** GO to SCIL Diagnostic Trouble Code (DTC) Index to repair DTC(s). → **No** GO to **C2**.
C2 CHECK CIRCUIT 667 (W/R) FOR A SHORT TO GROUND	
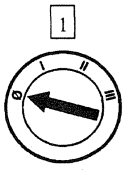 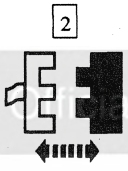 SCIL Module C288 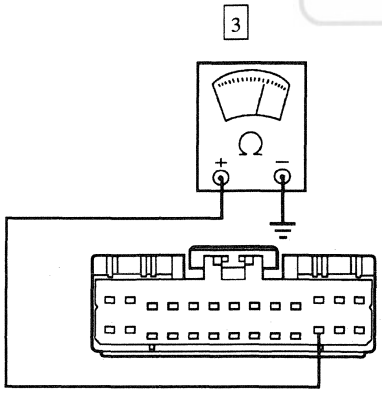 AK0586-B	3 Measure the resistance between SCIL module C288-24, circuit 667 (W/R), and ground. • Is the resistance greater than 10K ohms? → **Yes** GO to **C4**. → **No** GO to **C3**.

Official Licensed Product Ford Motor Company

(Continued)

DIAGNOSIS AND TESTING (Continued)

PINPOINT TEST C: THE DAYTIME RUNNING LAMPS ARE ON WITH THE IGNITION SWITCH OFF (Continued)

TEST CONDITIONS	TEST DETAILS/RESULTS/ACTIONS
C3 CHECK DAYTIME RUNNING LAMP (DRL) MODULE	
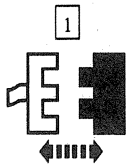 DRL Module C1029 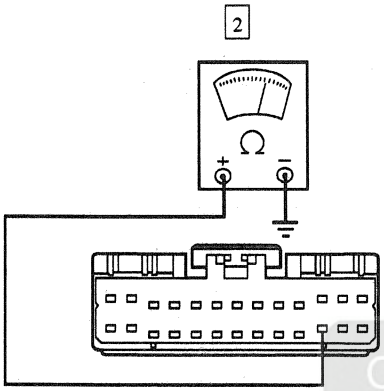 AK0586-B	2 Measure the resistance between the SCIL module C288-24, circuit 667 (W/R), and ground. • Is the resistance greater than 10K ohms? → **Yes** REPLACE the daytime running lamps control. TEST the system for normal operation. → **No** REPAIR circuit 667 (W/R). TEST the system for normal operation.
C4 CHECK DRL MODULE OUTPUT	
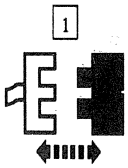 LH High Beam Headlamp C1001 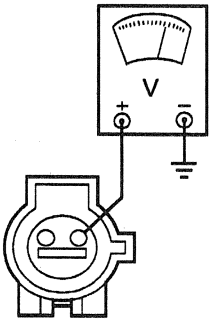 AK0591-A	3 Measure the voltage between LH high beam headlamp C1001, circuit 932 (GY/W), and ground. • Is the voltage greater than 10 volts? → **Yes** REPLACE the daytime running lamps control. TEST the system for normal operation. → **No** REPLACE the SCIL module. TEST the system for normal operation.

Official Licensed Product Ford Motor Company

REMOVAL AND INSTALLATION

Daytime Running Lamps (DRL) Control Module

Removal

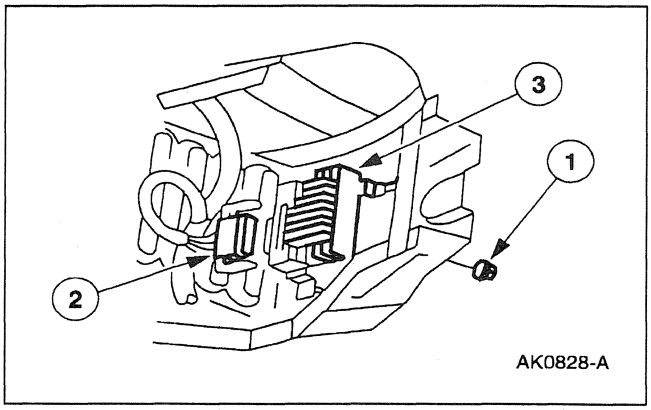

1. Remove the daytime running lamps control (15A272).
   1 Remove the two nuts.
   2 Disconnect the electrical connector.
   3 Remove the daytime running lamps control.

Installation

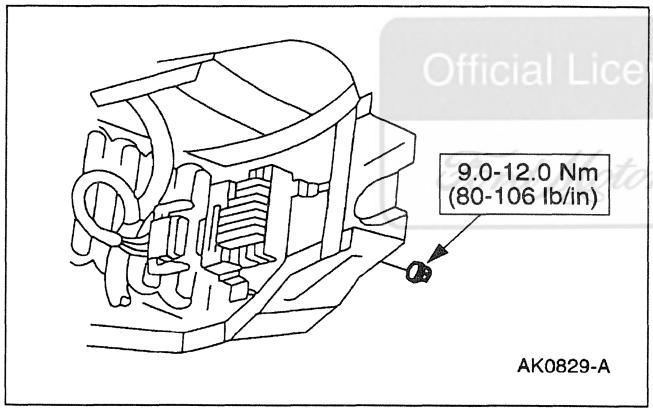

1. To install, reverse the removal procedure.

Official Licensed Product
Motor Company

SPECIFICATIONS

Torque Specifications

Description	Nm	Lb/In
Daytime Running Lamp Control Retaining Nuts	9-12	80-106

SECTION 418-00 Module Communications Network

VEHICLE APPLICATION: Mark VIII

SUBJECT **PAGE**

DESCRIPTION AND OPERATION
Communication Network....418-00-2
ISO 9141 Communication Network....418-00-4
SCP Communication Network....418-00-3
DIAGNOSIS AND TESTING
Communication Network....418-00-5
Inspection and Verification....418-00-5
Pinpoint Tests....418-00-8
Symptom Chart....418-00-6
System Precheck....418-00-6
GENERAL PROCEDURES
Communication Circuit Wiring Repair....418-00-71
SPECIFICATIONS....418-00-73

Official Licensed Product
Ford Motor Company

DESCRIPTION AND OPERATION

Communication Network

Module Communications Network

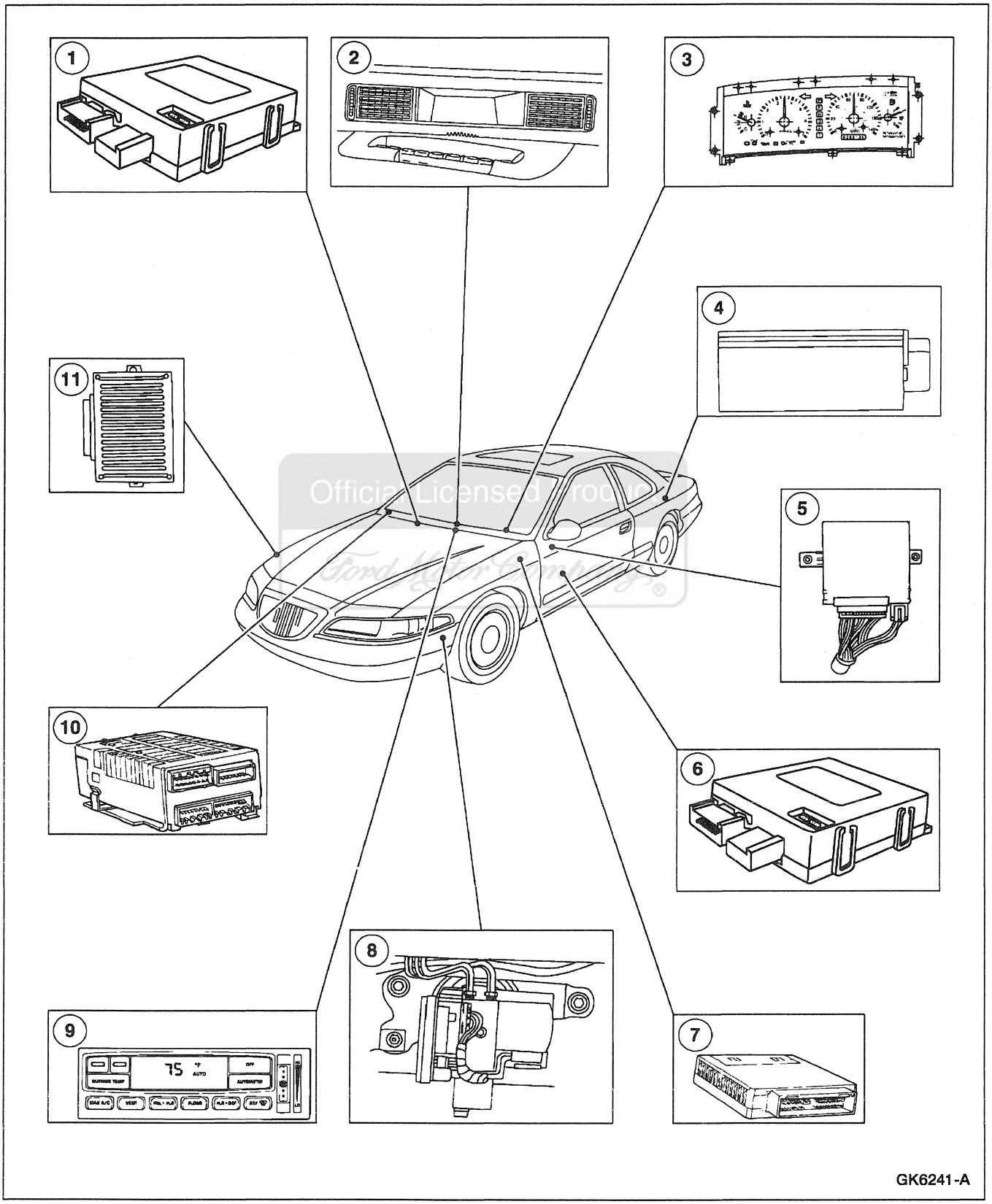

DESCRIPTION AND OPERATION (Continued)

Item	Part Number	Description
1	—	Passenger Seat Module
2	10D898	Message Center Switch Module
3	—	Hybrid Electronic Cluster (HEC)
4	19K350	Portable Support Electronics
5	13C791	Driver Door Module (DDM)
6	—	Driver Seat Module (DSM)
7	12A650	Powertrain Control Module (PCM)
8	2C219	Anti-Lock Brake Control Module
9	—	Electronic Automatic Temperature Control (EATC) Module
10	—	Steering Column/Ignition/Lighting (SCIL) Module (Illumination)
11	—	Variable Load Control Module (VLCM)

(Continued)

The module network consists of two different communication links; the international standards organization (ISO) 9141 and the standard corporate protocol (SCP).

There are ten modules linked to the SCP network and one module linked to the ISO network. All modules on the SCP and ISO networks can be diagnosed through the data link connector (DLC) located under the instrument panel to the right of the steering column.

SCP Communication Network

The SCP communication network provides the ability for module-to-module communication by sharing required inputs and outputs instead of each component having an input or output wired directly to or from each affected module.

Ten micro-processor based subsystems are included in this network to control the powertrain systems, chassis systems and the body electrical systems.

The anti-lock brake control module is linked to the SCP communication network. The module controls the brake pressure to the four wheels to keep the vehicle under control while braking. Refer to Section 206-09.

The driver door module (DDM) is linked to the SCP communication network. The DDM controls many functions including power windows, power locks, and keyless remote. The DDM also communicates with the driver seat module (DSM) to control power seat and mirror memory. For further information on memory mirrors refer to Section 501-09. For further information on driver memory seat refer to Section 501-10. For further information on power windows, refer to Section 501-11. For further information on power door locks, refer to Section 501-14A. For further information on keyless entry, refer to Section 501-14B.

The DSM is linked to the SCP communication network. The DSM controls the driver power seat and communicates with the DDM to control the driver seat memory and both outside memory mirror functions.

The electronic automatic temperature control (EATC) module is linked to the SCP communication network. The EATC module controls automatic climate functions that maintain the interior at a constant temperature setting. Refer to Section 412-00.

Official Licensed Copy Ford Motor Company

DESCRIPTION AND OPERATION (Continued)

The powertrain control module (PCM)(12A650) is linked to the SCP communication network. The PCM controls the engine performance, electronic ignition, emission controls and on board diagnostics. Refer to Section 3A in the Powertrain Control/Emissions Diagnosis Manual [1].

The variable load control module (VLCM) is linked to the SCP communication network. The VLCM controls the cooling fans and the A/C compressor clutch. The PCM determines when cooling fan operation is required by monitoring coolant temperature, vehicle speed and air conditioning status.

The hybrid electronic cluster (HEC) is linked to the SCP communication network. The HEC displays mph, rpm, fuel level, coolant temperature and various warning lamp indicators. Refer to Section 413-00.

The message center is linked to the SCP communication network. The message center provides the driver with information including the clock, basic trip functions, compass, warning messages, oil change functions and lamp out information. Refer to Section 413-08.

The steering column/ignition/lighting (SCIL) module is linked to the SCP communication network. The SCIL module controls the steering column relays for movement and memory. The SCIL module controls the anti-theft system and also controls all interior and exterior lighting. Refer to Section 419-10.

The cellular phone module is linked to the SCP communication network. Refer to Section 419-08.

ISO 9141 Communication Network

The ISO 9141 communication network:

- Consists of a single wire, circuit 70 (LB/W).
- Provides a common link for communication to an off-board tester through the DLC located under the instrument panel to the right of the steering column.
- **DOES NOT** allow module-to-module communications.

Fault Tolerance

The ISO 9141 communication link will fail if either of the following occurs:

- Circuit 70 (LB/W) is shorted to ground.
- Circuit 70 (LB/W) is shorted to power.

Purpose

The information within this section is designed to diagnose ISO 9141 and SCP communication link concerns. These concerns may affect normal functional operations of the vehicle, and be directly related to customer concerns, or be undetectable except during diagnostics.

To properly diagnose a network concern, follow the diagnostic procedure described in this section in the order presented.

Module Identification

The module included on this ISO 9141 communication link is the passenger seat module located under the passenger seat. If communication to the passenger seat module fails, refer to Section 501-10.

Official Licensed Product
Ford Motor Company

1 Can be purchased as a separate item.

DIAGNOSIS AND TESTING

Communication Network

Refer to Electrical and Vacuum Troubleshooting Manual, Cell 14, Multiplex Communication Network for schematic and connector information.

Special Tool(s)

ST1137-A	73 Digital Multimeter or equivalent 105-R0051
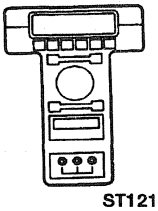 ST1217-A	New Generation STAR (NGS) Tester or equivalent 418-F048 (007-00500)

Inspection and Verification

1. Verify the customer concern by operating the system in question.
2. Visually inspect for obvious signs of electrical damage.

Visual Inspection Chart

Electrical
• Fuse • Damaged wiring harness • Loose or corroded connections • Anti-lock brake control module • Cellular phone module (CPM) • Driver door module (DDM) • Driver seat module (DSM) • Electronic automatic temperature control (EATC) module • Hybrid electronic cluster (HEC) • Message center module (MCM) • Passenger seat module (PSM) • Powertrain control module (PCM) • Steering column / ignition / lighting (SCIL) module • Variable load control module (VLCM)

3. If the concern remains after the inspection, connect the New Generation STAR (NGS) Tester to the data link connector (DLC) located beneath the instrument panel and select the vehicle to be tested from the NGS menu. If the NGS does not communicate with the vehicle:
   - check that the program card is properly installed.
   - check the connections to the vehicle.
   - check the ignition switch position.

   If the NGS still does not communicate with the vehicle, go to Pinpoint Test N.
4. Go to Pinpoint Test PC.

Official Licensed Product Ford Motor Company

DIAGNOSIS AND TESTING (Continued)

System Precheck

PINPOINT TEST PC: DATA LINK DIAGNOSTICS NETWORK TEST

TEST CONDITIONS	TEST DETAILS/RESULTS/ACTIONS
PC1 DATA LINK DIAGNOSTICS NETWORK TEST	
	1 Run the Data Link Diagnostics Network Test. • Is SYSTEM PASSED obtained? → **Yes** Test PASSED. RETURN to Symptom Chart of the section for the module in question. → **No** If CKT70 = ALL ECUS NO RESP/NOT EQUIP, GO to Pinpoint Test H. If CKT914 = ALL ECUS NO RESP/NOT EQUIP, GO to Pinpoint Test M. If CKT915 = ALL ECUS NO RESP/NOT EQUIP, GO to Pinpoint Test M. If no response from NGS Tester, GO to Pinpoint Test N. If CKT70, CKT914, or CKT915 = SOME ECUS NO RESP/NOT EQUIP, REFER to Symptom Chart. If module in question is NO RESPONSE/NOT EQUIPPED, REFER to Symptom Chart. If module in question is NO RESPONSE ON CKT914 (BUS+), REFER to Symptom Chart. If module in question is NO RESPONSE ON CKT915 (BUS-), REFER to Symptom Chart.

Official Licensed Publication
Ford Motor Company

Symptom Chart

Symptom Chart

Condition	Possible Source	Action
• The Module Does Not Respond to the NGS Tester — Anti-Lock Brake Control Module	• Wire or connection in SCP circuit. • Anti-lock brake control module.	• GO to Pinpoint Test A.
• The Module Does Not Respond to the NGS Tester — Cellular Phone Module (CPM)	• Wire or connection in SCP circuit. • Cellular phone module (CPM).	• GO to Pinpoint Test B.
• The Module Does Not Respond to the NGS Tester — Driver Door Module (DDM)	• Wire or connection in SCP circuit. • Driver door module (DDM).	• GO to Pinpoint Test C.

DIAGNOSIS AND TESTING (Continued)

Symptom Chart (Continued)

Condition	Possible Source	Action
• The Module Does Not Respond to the NGS Tester — Driver Seat Module (DSM)	• Wire or connection in SCP circuit. • Driver seat module (DSM).	• GO to Pinpoint Test D.
• The Module Does Not Respond to the NGS Tester — Electronic Automatic Temperature Control (EATC) Module	• Wire or connection in SCP circuit. • Electronic automatic temperature control (EATC) module.	• GO to Pinpoint Test E.
• The Module Does Not Respond to the NGS Tester — Hybrid Electronic Cluster (HEC)	• Wire or connection in SCP circuit. • Hybrid electronic cluster (HEC).	• GO to Pinpoint Test F.
• The Module Does Not Respond to the NGS Tester — Message Center Module (MCM)	• Wire or connection in SCP circuit. • Message center module (MCM).	• GO to Pinpoint Test G.
• The Module Does Not Respond to the NGS Tester — Passenger Seat Module (PSM)	• Wire or connection in ISO 9141 link circuit. • Passenger seat module (PSM).	• GO to Pinpoint Test H.
• The Module Does Not Respond to the NGS Tester — Powertrain Control Module (PCM)	• Wire or connection in SCP circuit. • Powertrain control module (PCM).	• GO to Pinpoint Test J.
• The Module Does Not Respond to the NGS Tester — Steering Column/Ignition/Lighting (SCIL) Module	• Wire or connection in SCP circuit. • Steering column/ignition/lighting (SCIL) module.	• GO to Pinpoint Test K.
• The Module Does Not Respond to the NGS Tester — Variable Load Control Module (VLCM)	• Wire or connection in SCP circuit. • Variable load control module (VLCM).	• GO to Pinpoint Test L.
• No Module/Network Communication — SCP Link	• Wire or connection in SCP circuit. • SCP link modules.	• GO to Pinpoint Test M.
• No Module/Network Communication	• Data link connector (DLC). • Fuse. • Circuitry. • New Generation STAR (NGS) Tester.	• GO to Pinpoint Test N.

Ford Licensed Product

DIAGNOSIS AND TESTING (Continued)

Pinpoint Tests

⚠ **CAUTION: Be careful when probing the fuse junction panel, power distribution box or any connectors. Damage will result to the connector receptacle if the probe or terminal being used is too large.**

⚠ **CAUTION: Electronic modules are sensitive to static electrical charges. If exposed to these charges, damage may result.**

NOTE: If DTCs are recorded and the symptom is not present when performing the pinpoint tests, an intermittent concern may be the cause. Always check for loose connections and corroded terminals.

PINPOINT TEST A: THE MODULE DOES NOT RESPOND TO THE NGS TESTER — ANTI-LOCK BRAKE CONTROL MODULE

TEST CONDITIONS	TEST DETAILS/RESULTS/ACTIONS
A1 CHECK ANTI-LOCK BRAKE CONTROL MODULE C114 AND DATA LINK CONNECTOR (DLC) C240	
1	
	2 Inspect the data link connector (DLC) C240 for damage. Repair as necessary.
3 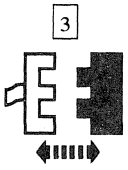 Anti-Lock Brake Control Module C114	
	4 Inspect the anti-lock brake control module C114 for damage. Repair as necessary.
5 Anti-Lock Brake Control Module C114	
6 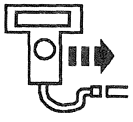 NGS	
7	
8 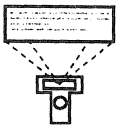 Diagnostic Data Link	

Official Licensed Product Ford Motor Company

(Continued)

DIAGNOSIS AND TESTING (Continued)

PINPOINT TEST A: THE MODULE DOES NOT RESPOND TO THE NGS TESTER — ANTI-LOCK BRAKE CONTROL MODULE (Continued)

TEST CONDITIONS	TEST DETAILS/RESULTS/ACTIONS
A1 CHECK ANTI-LOCK BRAKE CONTROL MODULE C114 AND DATA LINK CONNECTOR (DLC) C240 (Continued)	
	• Does the anti-lock brake control module still respond NO RESPONSE ON CKT914 (BUS+) or NO RESPONSE ON CKT915 (BUS-)? → **Yes** GO to **A2**. → **No** System OK.
A2 CHECK CIRCUIT 914 (T/O) AND 915 (PK/LB) CONCERN	
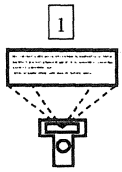 Diagnostic Data Link	• Was the result retrieved ABS: NO RESPONSE ON CKT914 (BUS+)? → **Yes** GO to **A3**. → **No** GO to **A6**.

Official Licensed Ford Motor Company

(Continued)

DIAGNOSIS AND TESTING (Continued)

PINPOINT TEST A: THE MODULE DOES NOT RESPOND TO THE NGS TESTER — ANTI-LOCK BRAKE CONTROL MODULE (Continued)

TEST CONDITIONS	TEST DETAILS/RESULTS/ACTIONS
A3 CHECK THE RESISTANCE BETWEEN DLC C240-2 AND ANTI-LOCK BRAKE CONTROL MODULE C114-20 — CIRCUIT 914 (T/O)	
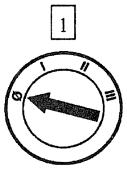 NGS 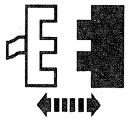 Anti-Lock Brake Control Module C114 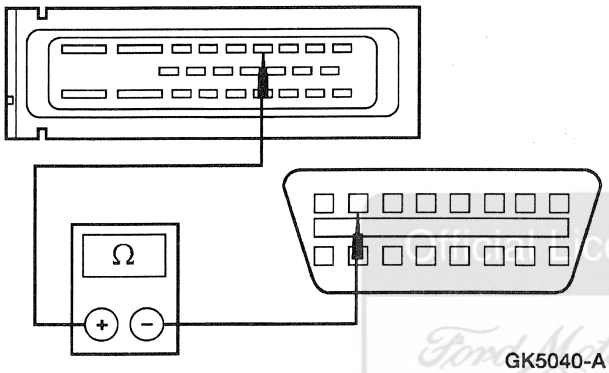 GK5040-A	4 Measure the resistance between anti-lock brake control module C114-20, circuit 914 (T/O), and DLC C240-2, circuit 914 (T/O). • Is the resistance less than 5 ohms? → **Yes** REPLACE the anti-lock brake control module; REFER to Section 206-09. TEST the system for normal operation. → **No** GO to **A4**.
A4 CHECK THE RESISTANCE BETWEEN DLC C240-2 AND IN-LINE C248F — CIRCUIT 914 (T/O)	
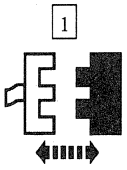 In-Line C248	2 Inspect the in-line C248M, C248F for damage.

(Continued)

Officially Licensed Product
Ford Motor Company

DIAGNOSIS AND TESTING (Continued)

PINPOINT TEST A: THE MODULE DOES NOT RESPOND TO THE NGS TESTER — ANTI-LOCK BRAKE CONTROL MODULE (Continued)

TEST CONDITIONS	TEST DETAILS/RESULTS/ACTIONS
A4 CHECK THE RESISTANCE BETWEEN DLC C240-2 AND IN-LINE C248F — CIRCUIT 914 (T/O) (Continued)	
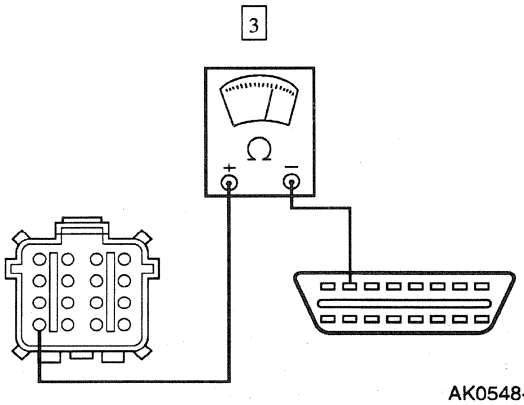 AK0548-B	3 Measure the resistance between data link connector (DLC) C240-2, circuit 914 (T/O), and in-line C248F-16, circuit 914 (T/O). • Is the connector OK and the resistance less than 5 ohms? → **Yes** RECONNECT in-line C248. GO to **A5**. → **No** REPAIR in-line C248 and/or circuit 914 (T/O) between in-line C248F and DLC C240. REFER to Communication Circuit Wiring Repair. TEST the system for normal operation.
A5 CHECK THE RESISTANCE BETWEEN DLC C240-2 AND IN-LINE C122M — CIRCUIT 914 (T/O)	
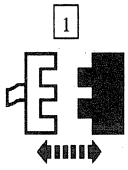 In-Line C122	2 Inspect the in-line C122M, C122F for damage.
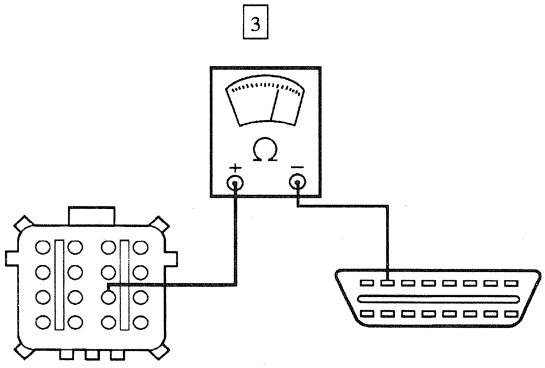 AK0550-B	3 Measure the resistance between data link connector (DLC) C240-2, circuit 914 (T/O), and in-line C122M-11, circuit 914 (T/O). • Is the connector OK and the resistance less than 5 ohms? → **Yes** REPAIR in-line C122 and/or circuit 914 (T/O) between in-line C122F and anti-lock brake control module C114. REFER to Communication Circuit Wiring Repair. TEST the system for normal operation → **No** REPAIR in-line C122 and/or circuit 914 (T/O) between in-line C248M and in-line C122M. REFER to Communication Circuit Wiring Repair. TEST the system for normal operation.

Official Licensed Product
Ford Motor Company

(Continued)

DIAGNOSIS AND TESTING (Continued)

PINPOINT TEST A: THE MODULE DOES NOT RESPOND TO THE NGS TESTER — ANTI-LOCK BRAKE CONTROL MODULE (Continued)

TEST CONDITIONS	TEST DETAILS/RESULTS/ACTIONS
A6 CHECK THE RESISTANCE BETWEEN DLC C240-10 AND ANTI-LOCK BRAKE CONTROL MODULE C114-19 — CIRCUIT 915 (PK/LB)	
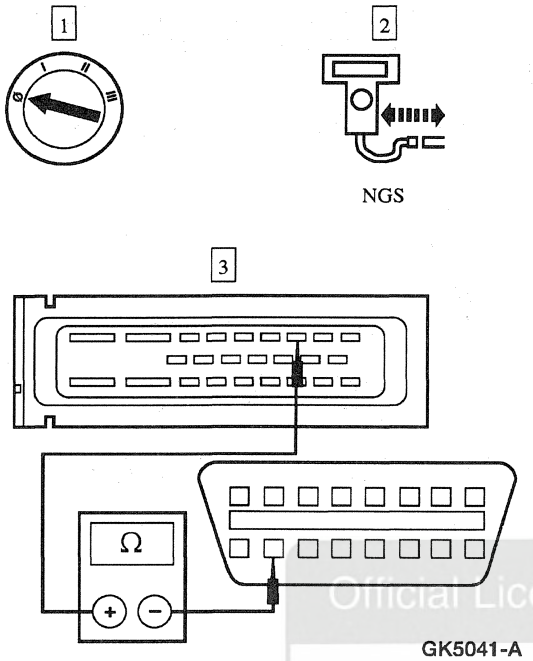	3 Measure the resistance between anti-lock brake control module C114-19, circuit 915 (PK/LB), and DLC C240-10, circuit 915 (PK/LB). • Is the resistance less than 5 ohms? → **Yes** REPLACE the anti-lock brake control module; REFER to Section 206-09. TEST the system for normal operation. → **No** GO to **A7**.
A7 CHECK THE RESISTANCE BETWEEN DLC C240-10 AND IN-LINE C248F — CIRCUIT 915 (PK/LB)	
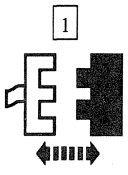 In-Line C248	2 Inspect the in-line C248M, C248F for damage.

(Continued)

Official Licensed Product

DIAGNOSIS AND TESTING (Continued)

PINPOINT TEST A: THE MODULE DOES NOT RESPOND TO THE NGS TESTER — ANTI-LOCK BRAKE CONTROL MODULE (Continued)

TEST CONDITIONS	TEST DETAILS/RESULTS/ACTIONS
A7 CHECK THE RESISTANCE BETWEEN DLC C240-10 AND IN-LINE C248F — CIRCUIT 915 (PK/LB) (Continued)	
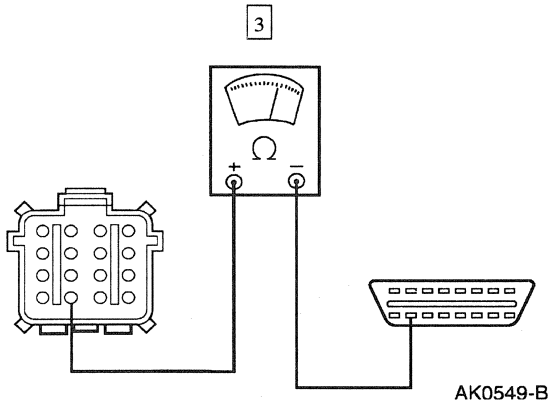 AK0549-B	3 Measure the resistance between DLC C240-10, circuit 915 (PK/LB), and in-line C248F-15, circuit 915 (PK/LB). • Is the connector OK and the resistance less than 5 ohms? → **Yes** RECONNECT in-line C248. GO to **A8**. → **No** REPAIR in-line C248 and/or circuit 915 (PK/LB) between in-line C248F and DLC C240. REFER to Communication Circuit Wiring Repair. TEST the system for normal operation.
A8 CHECK THE RESISTANCE BETWEEN DLC C240-10 AND IN-LINE C122M — CIRCUIT 915 (PK/LB)	
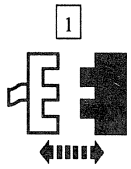 In-Line C122 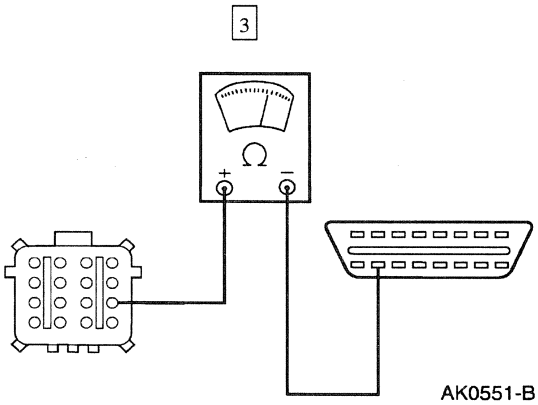 AK0551-B	2 Inspect the in-line C122M, C122F for damage. 3 Measure the resistance between DLC C240-10, circuit 915 (PK/LB), and in-line C122M-12, circuit 915 (PK/LB). • Is the connector OK and the resistance less than 5 ohms? → **Yes** REPAIR in-line C122 and/or circuit 915 (PK/LB) between in-line C122F and anti-lock brake control module C114. REFER to Communication Circuit Wiring Repair. TEST the system for normal operation. → **No** REPAIR in-line C122 and/or circuit 915 (PK/LB) between in-line C248M and in-line C122M. REFER to Communication Circuit Wiring Repair. TEST the system for normal operation.

Official Licensed Product
Ford Motor Company

DIAGNOSIS AND TESTING (Continued)

PINPOINT TEST B: THE MODULE DOES NOT RESPOND TO THE NGS TESTER — CELLULAR PHONE MODULE (CPM)

TEST CONDITIONS	TEST DETAILS/RESULTS/ACTIONS
B1 CHECK CELLULAR PHONE MODULE (CPM) C402 AND DATA LINK CONNECTOR (DLC) C240	
1 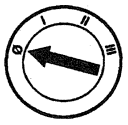	
	2 Inspect data link connector (DLC) C240 for damage. Repair as necessary.
3 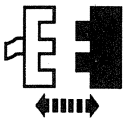 CPM C402	
	4 Inspect the cellular phone module (CPM) C402 for damage. Repair as necessary.
5 6 7 8 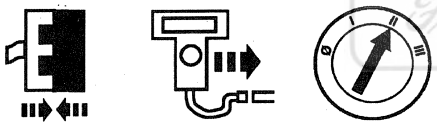 CPM C402 NGS Diagnostic Data Link	• Does the CPM still respond NO RESPONSE ON CKT914 (BUS+) or NO RESPONSE ON CKT915 (BUS-)? → **Yes** GO to **B2**. → **No** System OK.

(Continued)

Official Licensed Ford Motor Company

DIAGNOSIS AND TESTING (Continued)

PINPOINT TEST B: THE MODULE DOES NOT RESPOND TO THE NGS TESTER — CELLULAR PHONE MODULE (CPM) (Continued)

TEST CONDITIONS	TEST DETAILS/RESULTS/ACTIONS
B2 CHECK CIRCUIT 914 (T/O) AND 915 (PK/LB) CONCERN	
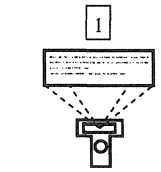 Diagnostic Data Link	• Was the result retrieved CPM: NO RESPONSE ON CKT914 (BUS+)? → **Yes** GO to **B3**. → **No** GO to **B6**.
B3 CHECK THE RESISTANCE BETWEEN DLC C240-2 AND CPM C402-16 — CIRCUIT 914 (T/O)	
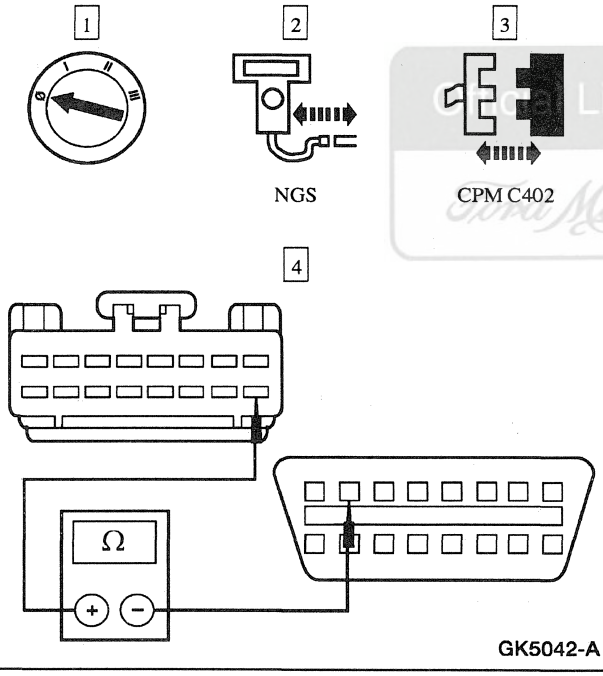 	4 Measure the resistance between CPM C402-16, circuit 914 (T/O), and DLC C240-2, circuit 914 (T/O). • Is the resistance less than 5 ohms? → **Yes** REPLACE the CPM; REFER to Section 419-08. TEST the system for normal operation. → **No** GO to **B4**.

Ford Motor Company

(Continued)

DIAGNOSIS AND TESTING (Continued)

PINPOINT TEST B: THE MODULE DOES NOT RESPOND TO THE NGS TESTER — CELLULAR PHONE MODULE (CPM) (Continued)

TEST CONDITIONS	TEST DETAILS/RESULTS/ACTIONS
B4 CHECK THE RESISTANCE BETWEEN DLC C240-2 AND IN-LINE C214M — CIRCUIT 914 (T/O)	
1 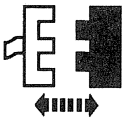 In-Line C214 3 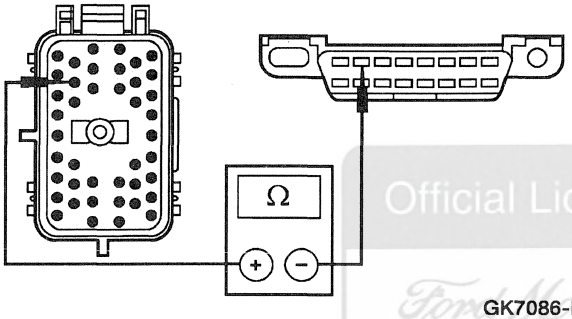 GK7086-B	2 Inspect the in-line C214M, C214F for damage. 3 Measure the resistance between DLC C240-2, circuit 914 (T/O), and in-line C214M-32, circuit 914 (T/O). • Is the connector OK and the resistance less than 5 ohms? → **Yes** RECONNECT in-line C214. GO to **B5**. → **No** REPAIR in-line C214 and/or circuit 914 (T/O) between in-line C214M and DLC C240. REFER to Communication Circuit Wiring Repair. TEST the system for normal operation.
B5 CHECK THE RESISTANCE BETWEEN DLC C240-2 AND IN-LINE C307F — CIRCUIT 914 (T/O)	
1 In-Line C307	2 Inspect the in-line C307M, C307F for damage.

(Continued)

Official Licensed Product
Ford Motor Company

DIAGNOSIS AND TESTING (Continued)

PINPOINT TEST B: THE MODULE DOES NOT RESPOND TO THE NGS TESTER — CELLULAR PHONE MODULE (CPM) (Continued)

TEST CONDITIONS	TEST DETAILS/RESULTS/ACTIONS
B5 CHECK THE RESISTANCE BETWEEN DLC C240-2 AND IN-LINE C307F — CIRCUIT 914 (T/O) (Continued)	
3 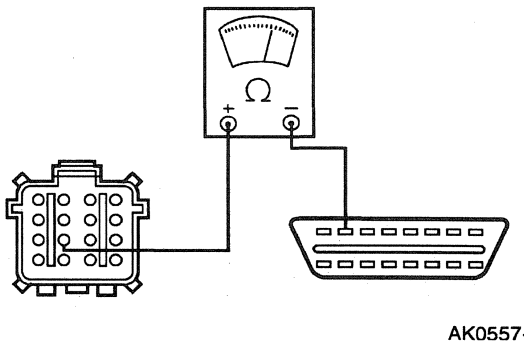 AK0557-B	3 Measure the resistance between DLC C240-2, circuit 914 (T/O), and in-line C307F-11, circuit 914 (T/O). • Is the connector OK and the resistance less than 5 ohms? → **Yes** REPAIR in-line C307 and/or circuit 914 (T/O) between in-line C307M and CPM C402. REFER to Communication Circuit Wiring Repair. TEST the system for normal operation. → **No** REPAIR in-line C307 and/or circuit 914 (T/O) between in-line C214F and in-line C307F. REFER to Communication Circuit Wiring Repair. TEST the system for normal operation.
B6 CHECK THE RESISTANCE BETWEEN DLC C240-10 AND CPM C402-15 — CIRCUIT 915 (PK/LB)	
1 2 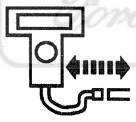 NGS 3 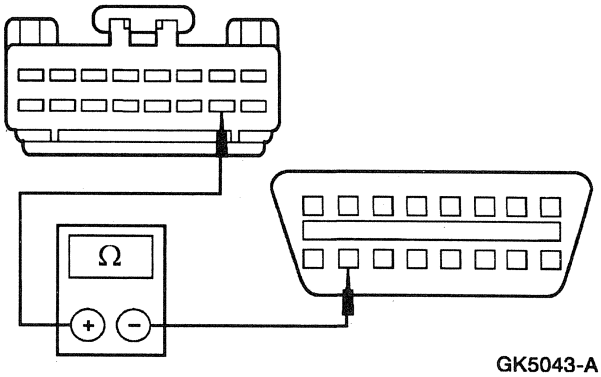 GK5043-A	3 Measure the resistance between CPM C402-15, circuit 915 (PK/LB), and DLC C240-10, circuit 915 (PK/LB). • Is the resistance less than 5 ohms? → **Yes** REPLACE the CPM; REFER to Section 419-08. TEST the system for normal operation. → **No** GO to **B7**.

(Continued)

DIAGNOSIS AND TESTING (Continued)

PINPOINT TEST B: THE MODULE DOES NOT RESPOND TO THE NGS TESTER — CELLULAR PHONE MODULE (CPM) (Continued)

TEST CONDITIONS	TEST DETAILS/RESULTS/ACTIONS
B7 CHECK THE RESISTANCE BETWEEN DLC C240-10 AND IN-LINE C214M — CIRCUIT 915 (PK/LB)	
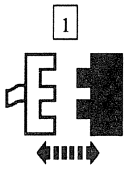 In-Line C214 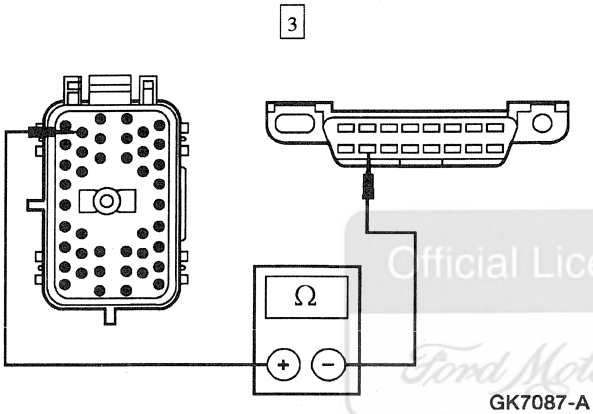 GK7087-A	2 Inspect the in-line C214M, C214F for damage. 3 Measure the resistance between DLC C240-10, circuit 915 (PK/LB), and in-line C214M-33, circuit 915 (PK/LB). • Is the connector OK and the resistance less than 5 ohms? → **Yes** RECONNECT in-line C214. GO to **B8**. → **No** REPAIR in-line C214 and/or circuit 915 (PK/LB) between in-line C214M and DLC C240. REFER to Communication Circuit Wiring Repair. TEST the system for normal operation.
B8 CHECK THE RESISTANCE BETWEEN DLC C240-10 AND IN-LINE C307F — CIRCUIT 915 (PK/LB)	
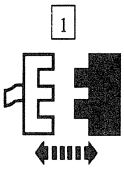 In-Line C307	2 Inspect the in-line C307M, C307F for damage.

(Continued)

Official Licensed Product
Ford Motor Company

DIAGNOSIS AND TESTING (Continued)

PINPOINT TEST B: THE MODULE DOES NOT RESPOND TO THE NGS TESTER — CELLULAR PHONE MODULE (CPM) (Continued)

TEST CONDITIONS	TEST DETAILS/RESULTS/ACTIONS
B8 CHECK THE RESISTANCE BETWEEN DLC C240-10 AND IN-LINE C307F — CIRCUIT 915 (PK/LB) (Continued)	
3 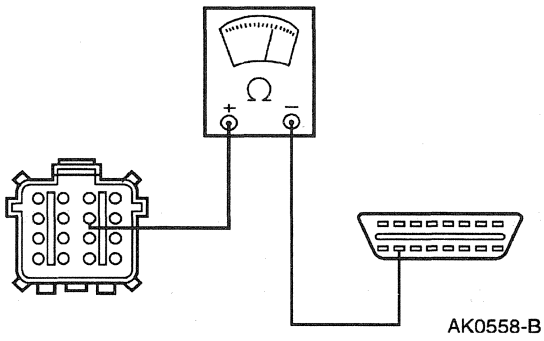 AK0558-B	3 Measure the resistance between DLC C240-10, circuit 915 (PK/LB), and in-line C307F-6, circuit 915 (PK/LB). • Is the connector OK and the resistance less than 5 ohms? → **Yes** REPAIR in-line C307 and/or circuit 915 (PK/LB) between in-line C307M and CPM C402. REFER to Communication Circuit Wiring Repair. TEST the system for normal operation. → **No** REPAIR in-line C307 and/or circuit 915 (PK/LB) between in-line C214F and in-line C307F. REFER to Communication Circuit Wiring Repair. TEST the system for normal operation.

PINPOINT TEST C: THE MODULE DOES NOT RESPOND TO THE NGS TESTER — DRIVER DOOR MODULE (DDM)

TEST CONDITIONS	TEST DETAILS/RESULTS/ACTIONS
C1 CHECK DRIVER DOOR MODULE (DDM) C455 AND DATA LINK CONNECTOR (DLC) C240	
1 	
	2 Inspect the data link connector (DLC) C240 for damage. Repair as necessary.
3 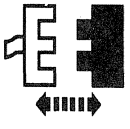 DDM C455	
	4 Inspect the drive door module (DDM) C455 for damage. Repair as necessary.

(Continued)

Official Licensed Product Ford Motor Company

DIAGNOSIS AND TESTING (Continued)

PINPOINT TEST C: THE MODULE DOES NOT RESPOND TO THE NGS TESTER — DRIVER DOOR MODULE (DDM) (Continued)

TEST CONDITIONS	TEST DETAILS/RESULTS/ACTIONS
C1 CHECK DRIVER DOOR MODULE (DDM) C455 AND DATA LINK CONNECTOR (DLC) C240 (Continued)	
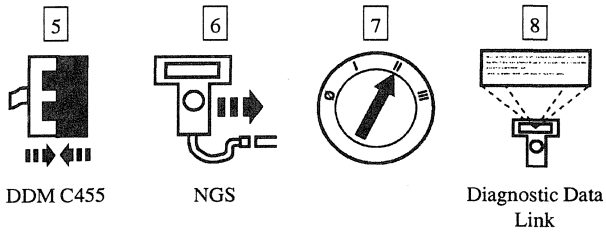	• Does the DDM still respond NO RESPONSE on CKT914 (BUS+) or NO RESPONSE on CKT915 (BUS-)? → **Yes** GO to **C2**. → **No** System OK.
C2 CHECK CIRCUIT 914 (T/O) AND 915 (PK/LB) CONCERN	
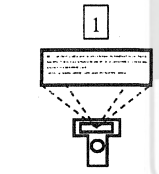	• Was the result retrieved DDM: NO RESPONSE ON CKT914 (BUS+)? → **Yes** GO to **C3**. → **No** GO to **C5**.

Official Licensed Product
Ford Motor Company

(Continued)

DIAGNOSIS AND TESTING (Continued)

PINPOINT TEST C: THE MODULE DOES NOT RESPOND TO THE NGS TESTER — DRIVER DOOR MODULE (DDM) (Continued)

TEST CONDITIONS	TEST DETAILS/RESULTS/ACTIONS
C3 CHECK THE RESISTANCE BETWEEN DLC C240-2 AND DDM C455-15 — CIRCUIT 914 (T/O)	
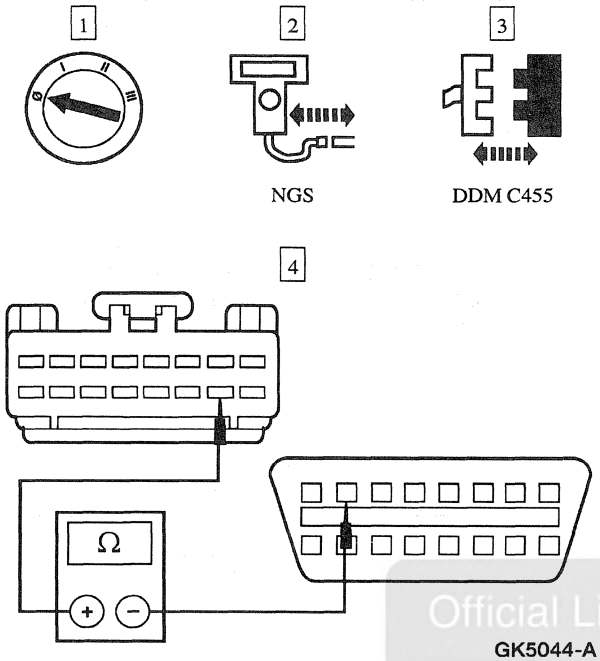	4 Measure the resistance between DDM C455-15, circuit 914 (T/O), and DLC C240-2, circuit 914 (T/O). • Is the resistance less than 5 ohms? → **Yes** REPLACE the DDM; REFER to Section 419-10. TEST the system for normal operation. → **No** GO to **C4**.
C4 CHECK THE RESISTANCE BETWEEN DLC C240-2 AND IN-LINE C214M — CIRCUIT 914 (T/O)	
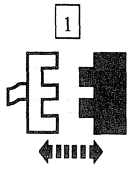	2 Inspect the in-line C214M, C214F for damage.

(Continued)

Official Licensed Product Ford Motor Company

DIAGNOSIS AND TESTING (Continued)

PINPOINT TEST C: THE MODULE DOES NOT RESPOND TO THE NGS TESTER — DRIVER DOOR MODULE (DDM) (Continued)

TEST CONDITIONS	TEST DETAILS/RESULTS/ACTIONS
C4 CHECK THE RESISTANCE BETWEEN DLC C240-2 AND IN-LINE C214M — CIRCUIT 914 (T/O) (Continued)	
3 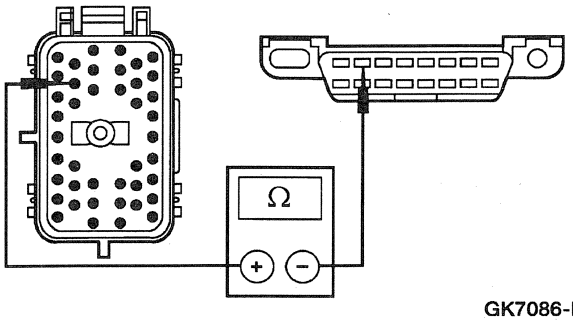 GK7086-B	3 Measure the resistance between DLC C240-2, circuit 914 (T/O), and in-line C214M-32, circuit 914 (T/O). • Is the connector OK and the resistance less than 5 ohms? → **Yes** REPAIR in-line C214 and/or circuit 914 (T/O) between in-line C214F and DDM C455. REFER to Communication Circuit Wiring Repair. TEST the system for normal operation → **No** REPAIR in-line C214 and/or circuit 914 (T/O) between in-line C214M and DLC C240. REFER to Communication Circuit Wiring Repair. TEST the system for normal operation.
C5 CHECK THE RESISTANCE BETWEEN DLC C240-10 AND DDM C455-16 — CIRCUIT 915 (PK/LB)	
1 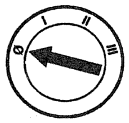 2 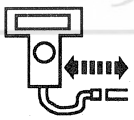 NGS 3 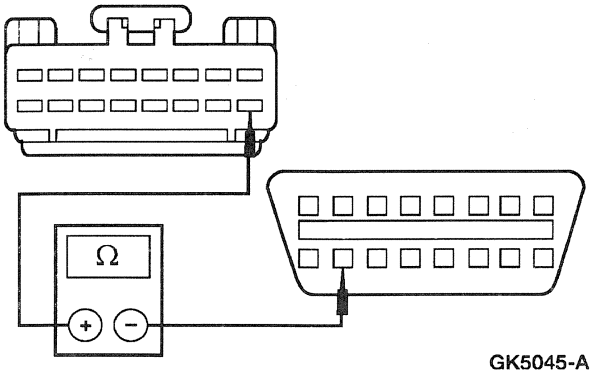 GK5045-A	3 Measure the resistance between DDM C455-16, circuit 915 (PK/LB), and DLC C240-10, circuit 915 (PK/LB). • Is the resistance less than 5 ohms? → **Yes** REPLACE the DDM; REFER to Section 419-10. TEST the system for normal operation. → **No** GO to **C6**.

(Continued)

DIAGNOSIS AND TESTING (Continued)

PINPOINT TEST C: THE MODULE DOES NOT RESPOND TO THE NGS TESTER — DRIVER DOOR MODULE (DDM) (Continued)

TEST CONDITIONS	TEST DETAILS/RESULTS/ACTIONS
C6 CHECK THE RESISTANCE BETWEEN DLC C240-10 AND IN-LINE C214M — CIRCUIT 915 (PK/LB)	
1 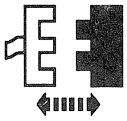 In-Line C214 3 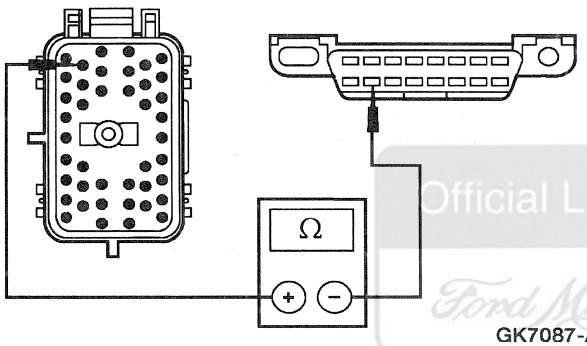 GK7087-A	2 Inspect the in-line C214M, C214F for damage. 3 Measure the resistance between DLC C240-10, circuit 915 (PK/LB), and in-line C214M-33, circuit 915 (PK/LB). • Is the connector OK and the resistance less than 5 ohms? → **Yes** REPAIR in-line C214 and/or circuit 915 (PK/LB) between in-line C214F and DDM C455. REFER to Communication Circuit Wiring Repair. TEST the system for normal operation. → **No** REPAIR in-line C214 and/or circuit 915 (PK/LB) between in-line C214M and DLC C240. REFER to Communication Circuit Wiring Repair. TEST the system for normal operation.

Official Licensed Ford Motor Company

PINPOINT TEST D: THE MODULE DOES NOT RESPOND TO THE NGS TESTER — DRIVER SEAT MODULE (DSM)

TEST CONDITIONS	TEST DETAILS/RESULTS/ACTIONS
D1 CHECK DRIVER SEAT MODULE (DSM) C311 AND DATA LINK CONNECTOR (DLC) C240	
1 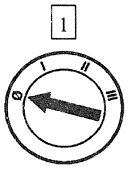	2 Inspect the data link connector (DLC) C240 for damage. Repair as necessary.

(Continued)

DIAGNOSIS AND TESTING (Continued)

PINPOINT TEST D: THE MODULE DOES NOT RESPOND TO THE NGS TESTER — DRIVER SEAT MODULE (DSM) (Continued)

TEST CONDITIONS	TEST DETAILS/RESULTS/ACTIONS
D1 CHECK DRIVER SEAT MODULE (DSM) C311 AND DATA LINK CONNECTOR (DLC) C240 (Continued)	
3 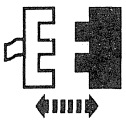 DSM C311	
	4 Inspect the driver seat module (DSM) C311 for damage. Repair as necessary.
5 6 7 8 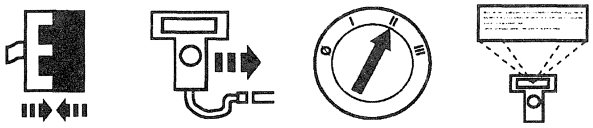 DSM C311 NGS Diagnostic Data Link	
	• Does the DSM still respond NO RESPONSE on CKT914 (BUS+) or NO RESPONSE on CKT915 (BUS-)? → **Yes** GO to **D2**. → **No** System OK.
D2 CHECK CIRCUIT 914 (T/O) AND 915 (PK/LB) CONCERN	
1 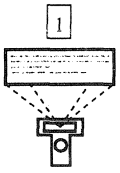 Diagnostic Data Link	
	• Was the result retrieved DSM: NO RESPONSE ON CKT914 (BUS+)? → **Yes** GO to **D3**. → **No** GO to **D6**.

(Continued)

Official Licensed Product
Ford Motor Company

DIAGNOSIS AND TESTING (Continued)

PINPOINT TEST D: THE MODULE DOES NOT RESPOND TO THE NGS TESTER — DRIVER SEAT MODULE (DSM) (Continued)

TEST CONDITIONS	TEST DETAILS/RESULTS/ACTIONS
D3 CHECK THE RESISTANCE BETWEEN DLC C240-2 AND DSM C311-25 — CIRCUIT 914 (T/O)	
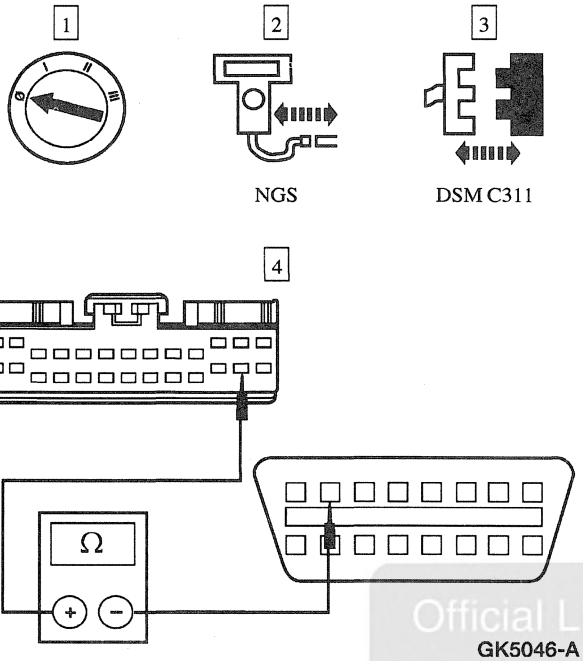 GK5046-A	4 Measure the resistance between DSM C311-25, circuit 914 (T/O), and DLC C240-2, circuit 914 (T/O). • Is the resistance less than 5 ohms? → **Yes** REPLACE the DSM; REFER to Section 419-10. TEST the system for normal operation. → **No** GO to **D4**.
D4 CHECK THE RESISTANCE BETWEEN DLC C240-2 AND IN-LINE C214M — CIRCUIT 914 (T/O)	
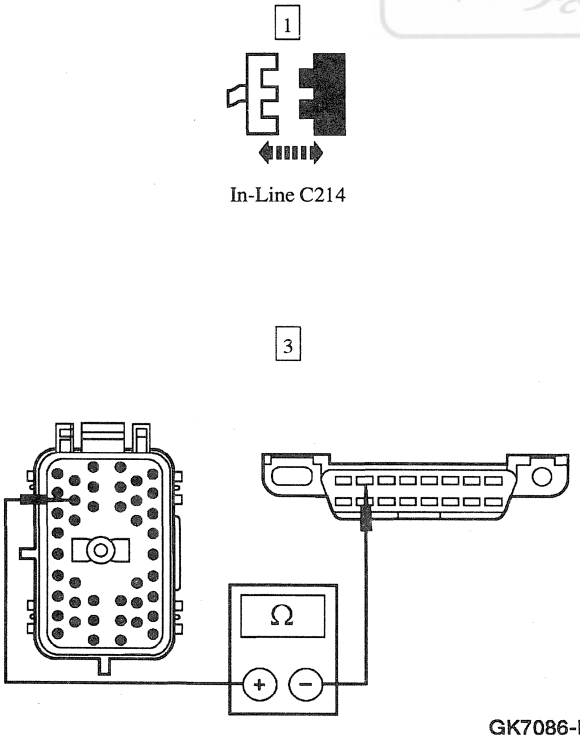 GK7086-B	2 Inspect the in-line C214M, C214F for damage. 3 Measure the resistance between DLC C240-2, circuit 914 (T/O), and in-line C214M-32, circuit 914 (T/O). • Is the connector OK and the resistance less than 5 ohms? → **Yes** RECONNECT in-line C214. GO to **D5**. → **No** REPAIR in-line C214 and/or circuit 914 (T/O) between in-line C214M and DLC C240. REFER to Communication Circuit Wiring Repair. TEST the system for normal operation.

Official Licensed Product Ford Motor Company

(Continued)

DIAGNOSIS AND TESTING (Continued)

PINPOINT TEST D: THE MODULE DOES NOT RESPOND TO THE NGS TESTER — DRIVER SEAT MODULE (DSM) (Continued)

TEST CONDITIONS	TEST DETAILS/RESULTS/ACTIONS
D5 CHECK THE RESISTANCE BETWEEN DLC C240-2 AND IN-LINE C301F — CIRCUIT 914 (T/O)	
1 In-Line C301 3 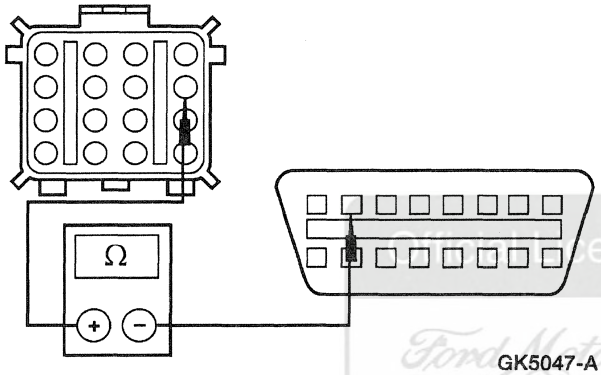 GK5047-A	2 Inspect the in-line C301M, C301F for damage. 3 Measure the resistance between DLC C240-2, circuit 914 (T/O), and in-line C301F-5, circuit 914 (T/O). • Is the connector OK and the resistance less than 5 ohms? → **Yes** REPAIR in-line C301 and/or circuit 914 (T/O) between in-line C301M and DSM C311. REFER to Communication Circuit Wiring Repair. TEST the system for normal operation. → **No** REPAIR in-line C301 and/or circuit 914 (T/O) between in-line C214F and in-line C301F. REFER to Communication Circuit Wiring Repair. TEST the system for normal operation.

(Continued)

Ford Motor Company

DIAGNOSIS AND TESTING (Continued)

PINPOINT TEST D: THE MODULE DOES NOT RESPOND TO THE NGS TESTER — DRIVER SEAT MODULE (DSM) (Continued)

TEST CONDITIONS	TEST DETAILS/RESULTS/ACTIONS
D6 CHECK THE RESISTANCE BETWEEN DLC C240-10 AND DSM C311-26 — CIRCUIT 915 (PK/LB)	
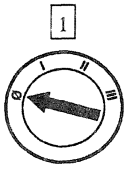 NGS 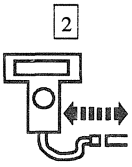 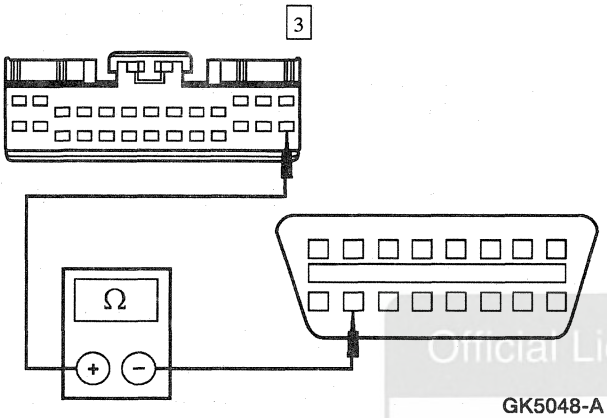 GK5048-A	3 Measure the resistance between DSM C311-26, circuit 915 (PK/LB), and DLC C240-10, circuit 915 (PK/LB). • Is the resistance less than 5 ohms? → **Yes** REPLACE the DSM; REFER to Section 419-10. TEST the system for normal operation. → **No** GO to **D7**.
D7 CHECK THE RESISTANCE BETWEEN DLC C240-10 AND IN-LINE C214M — CIRCUIT 915 (PK/LB)	
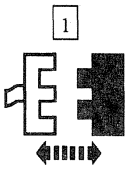 In-Line C214	2 Inspect the in-line C214M, C214F for damage.

(Continued)

Official Licensed Product

DIAGNOSIS AND TESTING (Continued)

PINPOINT TEST D: THE MODULE DOES NOT RESPOND TO THE NGS TESTER — DRIVER SEAT MODULE (DSM) (Continued)

TEST CONDITIONS	TEST DETAILS/RESULTS/ACTIONS
D7 CHECK THE RESISTANCE BETWEEN DLC C240-10 AND IN-LINE C214M — CIRCUIT 915 (PK/LB) (Continued)	
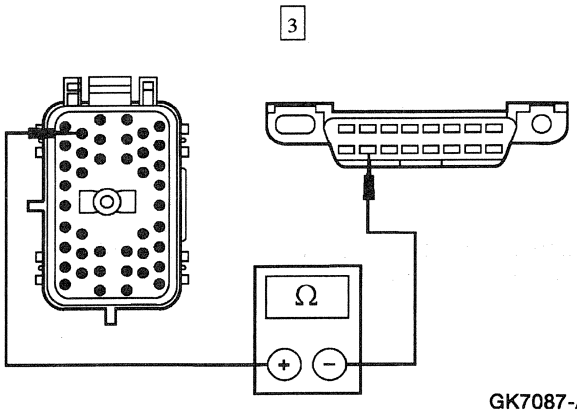	3 Measure the resistance between DLC C240-10, circuit 915 (PK/LB), and in-line C214M-33, circuit 915 (PK/LB). • Is the connector OK and the resistance less than 5 ohms? → **Yes** RECONNECT in-line C214. GO to **D8**. → **No** REPAIR in-line C214 and/or circuit 915 (PK/LB) between in-line C214M and DLC C240. REFER to Communication Circuit Wiring Repair. TEST the system for normal operation.
D8 CHECK THE RESISTANCE BETWEEN DLC C240-10 AND IN-LINE C301F — CIRCUIT 915 (PK/LB)	
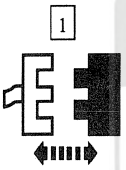	2 Inspect the in-line C301M, C301F for damage.
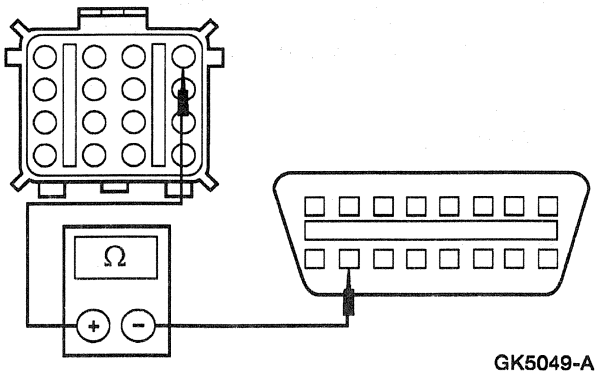	3 Measure the resistance between DLC C240-10, circuit 915 (PK/LB), and in-line C301F-1, circuit 915 (PK/LB). • Is the connector OK and the resistance less than 5 ohms? → **Yes** REPAIR in-line C301 and/or circuit 915 (PK/LB) between in-line C301M and DSM C311. REFER to Communication Circuit Wiring Repair. TEST the system for normal operation → **No** REPAIR in-line C301 and/or circuit 915 (PK/LB) between in-line C214F and in-line C301F. REFER to Communication Circuit Wiring Repair. TEST the system for normal operation.

Official Licensed Product
Ford Motor Company

DIAGNOSIS AND TESTING (Continued)

PINPOINT TEST E: THE MODULE DOES NOT RESPOND TO THE NGS TESTER — ELECTRONIC AUTOMATIC TEMPERATURE CONTROL (EATC) MODULE

TEST CONDITIONS	TEST DETAILS/RESULTS/ACTIONS
E1 CHECK ELECTRONIC AUTOMATIC TEMPERATURE CONTROL (EATC) MODULE C273 AND DATA LINK CONNECTOR (DLC) C240	
1 	
	2 Inspect the data link connector (DLC) C240 for damage. Repair as necessary.
3 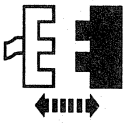 EATC Module C273	
	4 Inspect the EATC module C273 for damage. Repair as necessary.
5 EATC Module C273 6 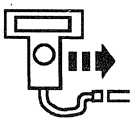 NGS 7 8 Diagnostic Data Link	• Does the EATC module still respond NO RESPONSE on CKT914 (BUS+) or NO RESPONSE on CKT915 (BUS-)? → **Yes** GO to **E2**. → **No** System OK.

(Continued)

Official Licensed Reproduction Ford Motor Company

DIAGNOSIS AND TESTING (Continued)

PINPOINT TEST E: THE MODULE DOES NOT RESPOND TO THE NGS TESTER — ELECTRONIC AUTOMATIC TEMPERATURE CONTROL (EATC) MODULE (Continued)

TEST CONDITIONS	TEST DETAILS/RESULTS/ACTIONS
E2 CHECK CIRCUIT 914 (T/O) AND 915 (PK/LB) CONCERN	
1 Diagnostic Data Link	• Was the result retrieved EATC: NO RESPONSE ON CKT914 (BUS+)? → **Yes** GO to **E3**. → **No** GO to **E4**.
E3 CHECK THE RESISTANCE BETWEEN DLC C240-2 AND EATC MODULE C273-15 — CIRCUIT 914 (T/O)	
1 2 3 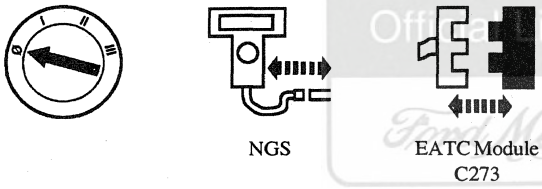 NGS EATC Module C273 4 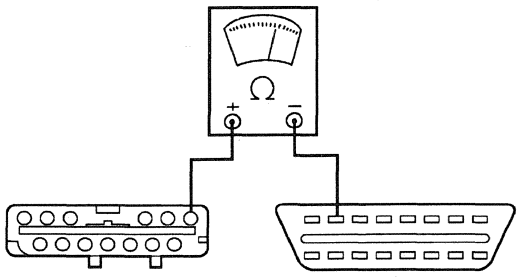 AK0527-B	4 Measure the resistance between EATC module C273-15, circuit 914 (T/O), and DLC C240-2, circuit 914 (T/O). • Is the resistance less than 5 ohms? → **Yes** GO to **E4**. → **No** REPAIR circuit 914 (T/O) between EATC module C273 and DLC C240. REFER to Communication Circuit Wiring Repair. TEST the system for normal operation.

Officially Licensed Product Ford Motor Company

(Continued)

DIAGNOSIS AND TESTING (Continued)

PINPOINT TEST E: THE MODULE DOES NOT RESPOND TO THE NGS TESTER — ELECTRONIC AUTOMATIC TEMPERATURE CONTROL (EATC) MODULE (Continued)

TEST CONDITIONS	TEST DETAILS/RESULTS/ACTIONS
E4 CHECK THE RESISTANCE BETWEEN DLC C240-10 AND EATC MODULE C273-1 — CIRCUIT 915 (PK/LB)	
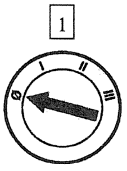 1 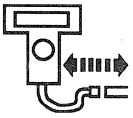 2 NGS 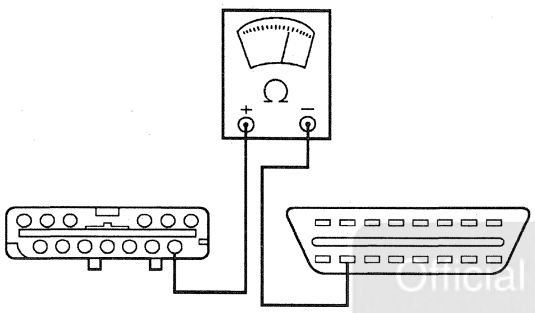 3 AK0528-B	3 Measure the resistance between EATC module C273-1, circuit 915 (PK/LB), and DLC C240-10, circuit 915 (PK/LB). • Is the resistance less than 5 ohms? → **Yes** REPLACE the EATC module; REFER to Section 412-00. TEST the system for normal operation. → **No** REPAIR circuit 915 (PK/LB) between EATC module C273 and DLC C240. REFER to Communication Circuit Wiring Repair. TEST the system for normal operation.

Official Licensed Product
Ford Motor Company

PINPOINT TEST F: THE MODULE DOES NOT RESPOND TO THE NGS TESTER — HYBRID ELECTRONIC CLUSTER (HEC)

TEST CONDITIONS	TEST DETAILS/RESULTS/ACTIONS
F1 CHECK HYBRID ELECTRONIC CLUSTER (HEC) C293 AND DATA LINK CONNECTOR (DLC) C240	
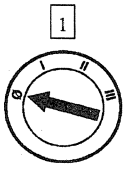 1 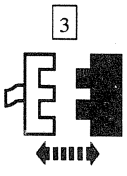 3 HEC C293	2 Inspect the data link connector (DLC) C240 for damage. Repair as necessary.

(Continued)

DIAGNOSIS AND TESTING (Continued)

PINPOINT TEST F: THE MODULE DOES NOT RESPOND TO THE NGS TESTER — HYBRID ELECTRONIC CLUSTER (HEC) (Continued)

TEST CONDITIONS	TEST DETAILS/RESULTS/ACTIONS
F1 CHECK HYBRID ELECTRONIC CLUSTER (HEC) C293 AND DATA LINK CONNECTOR (DLC) C240 (Continued)	
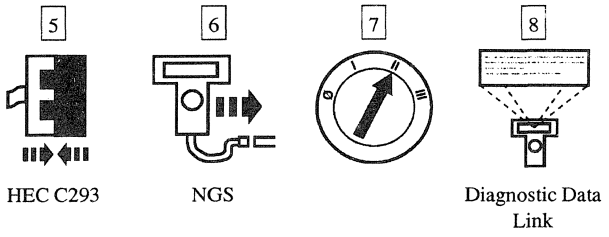 HEC C293 NGS Diagnostic Data Link	4 Inspect the hybrid electronic cluster (HEC) C293 for damage. Repair as necessary. • Does the HEC still respond NO RESPONSE on CKT914 (BUS+) or NO RESPONSE on CKT915 (BUS-)? → **Yes** GO to **F2**. → **No** System OK.
F2 CHECK CIRCUIT 914 (T/O) AND 915 (PK/LB) CONCERN	
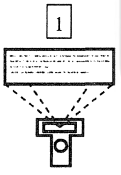 Diagnostic Data Link	• Was the result retrieved HEC: NO RESPONSE ON CKT914 (BUS+)? → **Yes** GO to **F3**. → **No** GO to **F4**.

Official Licensed Product Ford Motor Company

(Continued)

DIAGNOSIS AND TESTING (Continued)

PINPOINT TEST F: THE MODULE DOES NOT RESPOND TO THE NGS TESTER — HYBRID ELECTRONIC CLUSTER (HEC) (Continued)

TEST CONDITIONS	TEST DETAILS/RESULTS/ACTIONS
F3 CHECK THE RESISTANCE BETWEEN DLC C240-2 AND HEC C293-19 — CIRCUIT 914 (T/O)	
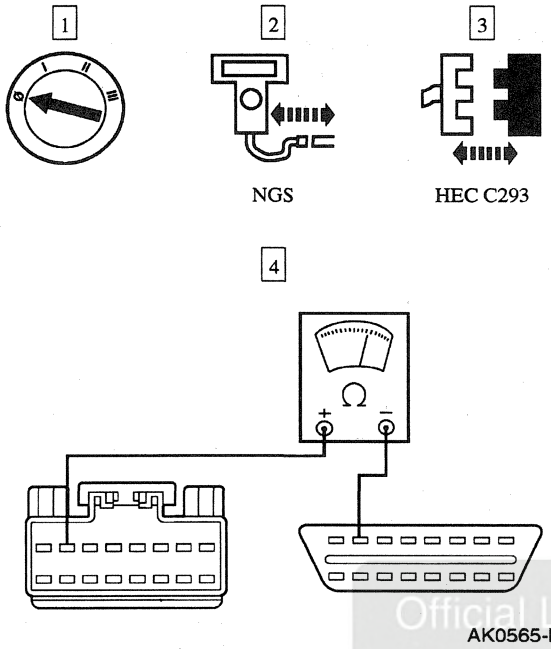	4 Measure the resistance between HEC C293-19, circuit 914 (T/O), and DLC C240-2, circuit 914 (T/O). • Is the resistance less than 5 ohms? → **Yes** GO to **F4**. → **No** REPAIR circuit 914 (T/O) between HEC C293 and DLC C240. REFER to Communication Circuit Wiring Repair. TEST the system for normal operation.
F4 CHECK THE RESISTANCE BETWEEN DLC C240-10 AND HEC C293-20 — CIRCUIT 915 (PK/LB)	
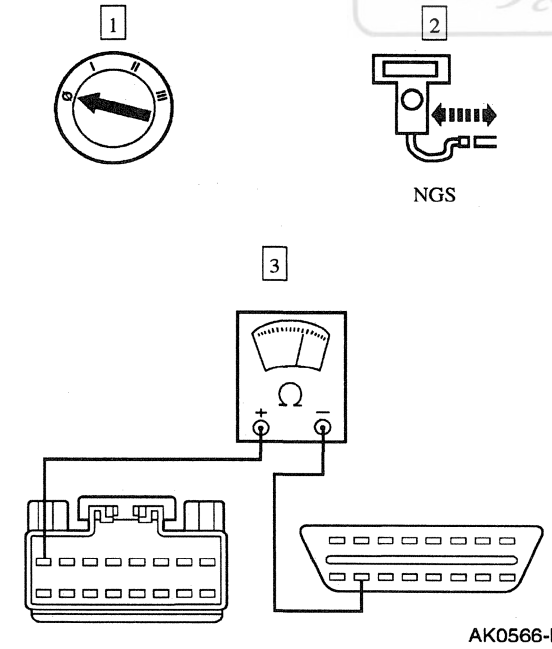	3 Measure the resistance between HEC C293-20, circuit 915 (PK/LB), and DLC C240-10, circuit 915 (PK/LB). • Is the resistance less than 5 ohms? → **Yes** REPLACE the HEC; REFER to Section 413-01. TEST the system for normal operation. → **No** REPAIR circuit 915 (PK/LB) between HEC C293 and DLC C240. REFER to Communication Circuit Wiring Repair. TEST the system for normal operation.

Official Licensed Product
Ford Motor Company

DIAGNOSIS AND TESTING (Continued)

PINPOINT TEST G: THE MODULE DOES NOT RESPOND TO THE NGS TESTER — MESSAGE CENTER MODULE (MCM)

TEST CONDITIONS	TEST DETAILS/RESULTS/ACTIONS
G1 CHECK MESSAGE CENTER MODULE (MCM) C246 AND DATA LINK CONNECTOR (DLC) C240	
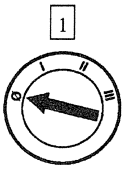 1	
	2 Inspect the data link connector (DLC) C240 for damage. Repair as necessary.
 3 MCM C246	
	4 Inspect the message center module (MCM) C246 for damage. Repair as necessary.
 5 MCM C246 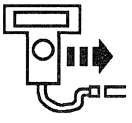 6 NGS 7 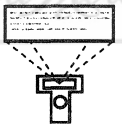 8 Diagnostic Data Link	• Does the MCM still respond NO RESPONSE on CKT914 (BUS+) or NO RESPONSE on CKT915 (BUS-)? → **Yes** GO to **G2**. → **No** System OK.

(Continued)

Official Licensed Product Ford Motor Company

DIAGNOSIS AND TESTING (Continued)

PINPOINT TEST G: THE MODULE DOES NOT RESPOND TO THE NGS TESTER — MESSAGE CENTER MODULE (MCM) (Continued)

TEST CONDITIONS	TEST DETAILS/RESULTS/ACTIONS
G2 CHECK CIRCUIT 914 (T/O) AND 915 (PK/LB) CONCERN	
1 Diagnostic Data Link	• Was the result retrieved MCM: NO RESPONSE ON CKT914 (BUS+)? → **Yes** GO to **G3**. → **No** GO to **G4**.
G3 CHECK THE RESISTANCE BETWEEN DLC C240-2, AND MCM C246-5 — CIRCUIT 914 (T/O)	
1 2 3 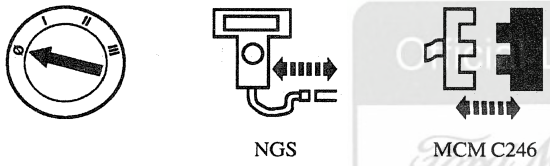 NGS MCM C246 4 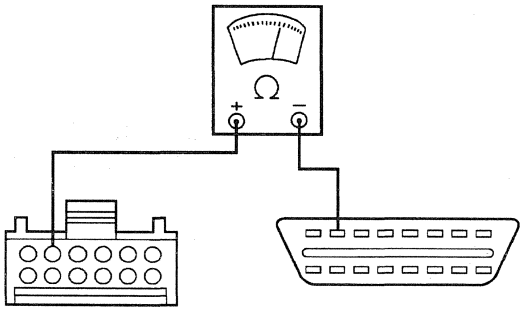 AK0567-B	4 Measure the resistance between MCM C246-5, circuit 914 (T/O), and DLC C240-2, circuit 914 (T/O). • Is the resistance less than 5 ohms? → **Yes** GO to **G4**. → **No** REPAIR circuit 914 (T/O) between MCM C246 and DLC C240. REFER to Communication Circuit Wiring Repair. TEST the system for normal operation.

Ford Motor Company Licensed Product

(Continued)

DIAGNOSIS AND TESTING (Continued)

PINPOINT TEST G: THE MODULE DOES NOT RESPOND TO THE NGS TESTER — MESSAGE CENTER MODULE (MCM) (Continued)

TEST CONDITIONS	TEST DETAILS/RESULTS/ACTIONS
G4 CHECK THE RESISTANCE BETWEEN DLC C240-10 AND MCM C246-4 — CIRCUIT 915 (PK/LB)	
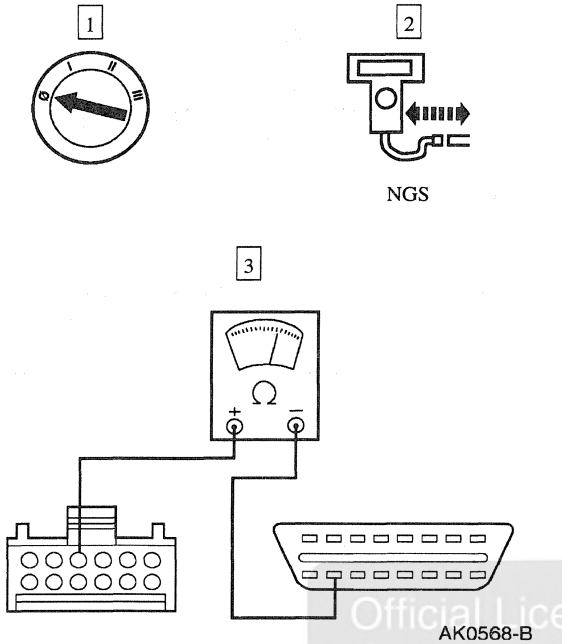	3 Measure the resistance between MCM C246-4, circuit 915 (PK/LB), and DLC C240-10, circuit 915 (PK/LB). • Is the resistance less than 5 ohms? → **Yes** REPLACE the MCM; REFER to Section 413-08. TEST the system for normal operation. → **No** REPAIR circuit 915 (PK/LB) between MCM C246 and DLC C240. TEST the system for normal operation.

PINPOINT TEST H: THE MODULE DOES NOT RESPOND TO THE NGS TESTER — PASSENGER SEAT MODULE (PSM)

TEST CONDITIONS	TEST DETAILS/RESULTS/ACTIONS
H1 CHECK DATA LINK CONNECTOR (DLC) C240 AND PASSENGER SEAT MODULE (PSM) C320	
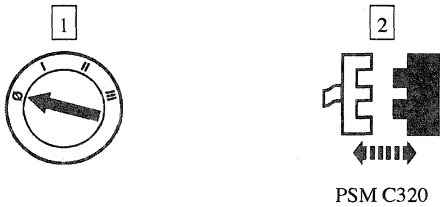	3 Inspect the passenger seat module (PSM) C320 for damage.

(Continued)

DIAGNOSIS AND TESTING (Continued)

PINPOINT TEST H: THE MODULE DOES NOT RESPOND TO THE NGS TESTER — PASSENGER SEAT MODULE (PSM) (Continued)

TEST CONDITIONS	TEST DETAILS/RESULTS/ACTIONS
H1 CHECK DATA LINK CONNECTOR (DLC) C240 AND PASSENGER SEAT MODULE (PSM) C320 (Continued)	
	4 Inspect the data link connector (DLC) C240 for damage. • Are the PSM C320 and DLC C240 OK? → **Yes** GO to **H2**. → **No** REPAIR the PSM C320 and/or DLC 251. TEST the system for normal operation.
H2 CHECK CIRCUIT 70 (LB/W) FOR SHORT TO POWER	
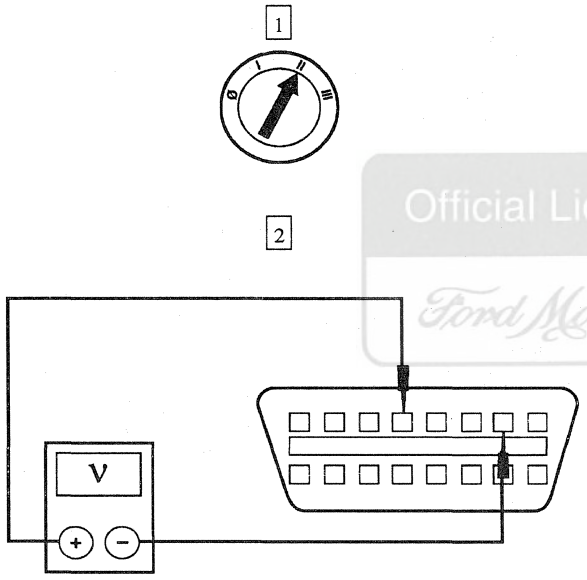 GK5050-A	2 Measure the voltage between DLC C240-7, circuit 70 (LB/W), and DLC C240-4, circuit 57 (BK). • Is any voltage indicated? → **Yes** GO to **H3**. → **No** GO to **H5**.
H3 CHECK FOR VOLTAGE BETWEEN DLC C240-7 AND IN-LINE C200	
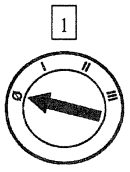 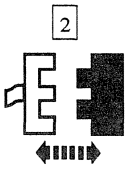 In-Line C200	3 Inspect in-line C200M, C200F for damage.

(Continued)

Official Licensed Product Ford Motor Company

DIAGNOSIS AND TESTING (Continued)

PINPOINT TEST H: THE MODULE DOES NOT RESPOND TO THE NGS TESTER — PASSENGER SEAT MODULE (PSM) (Continued)

TEST CONDITIONS	TEST DETAILS/RESULTS/ACTIONS
H3 CHECK FOR VOLTAGE BETWEEN DLC C240-7 AND IN-LINE C200 (Continued)	
4 5 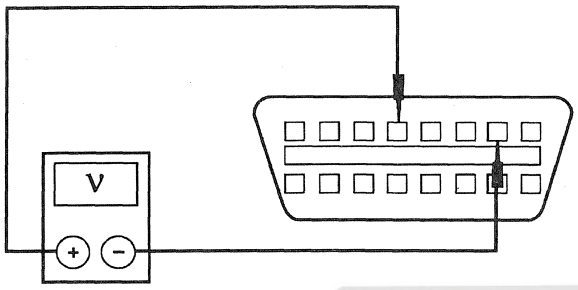 GK5050-A	5 Measure the voltage between DLC C240-7, circuit 70 (LB/W), and DLC C240-4, circuit 57 (BK). • Is any voltage indicated? → **Yes** REPAIR in-line C200 and/or circuit 70 (LB/W) between DLC C240 and in-line C200F. TEST the system for normal operation. → **No** RECONNECT in-line C200. GO to **H4**.
H4 CHECK FOR VOLTAGE BETWEEN DLC C240-7 AND IN-LINE C304	
1 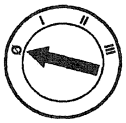 2 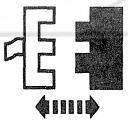 In-Line C304 4 	3 Inspect in-line C304M, C304F for damage.

(Continued)

Officially Licensed Product Ford Motor Company

DIAGNOSIS AND TESTING (Continued)

PINPOINT TEST H: THE MODULE DOES NOT RESPOND TO THE NGS TESTER — PASSENGER SEAT MODULE (PSM) (Continued)

TEST CONDITIONS	TEST DETAILS/RESULTS/ACTIONS
H4 CHECK FOR VOLTAGE BETWEEN DLC C240-7 AND IN-LINE C304 (Continued)	
5 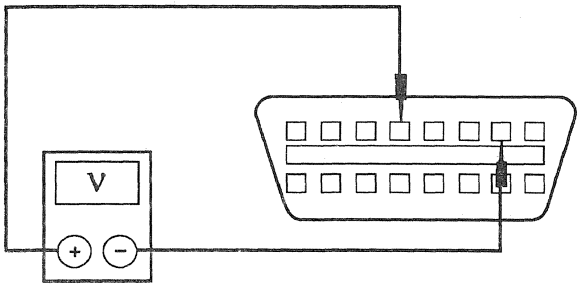 GK5050-A	5 Measure the voltage between DLC C240-7, circuit 70 (LB/W), and DLC C240-4, circuit 57 (BK). • Is any voltage indicated? → **Yes** REPAIR in-line C304 and/or circuit 70 (LB/W) between in-line C304F and in-line C200M. TEST the system for normal operation. → **No** REPAIR in-line C304 and/or circuit 70 (LB/W) between C304M and PSM C320. TEST the system for normal operation.
H5 CHECK CIRCUIT 70 (LB/W) FOR SHORT TO GROUND	
1 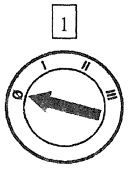 2 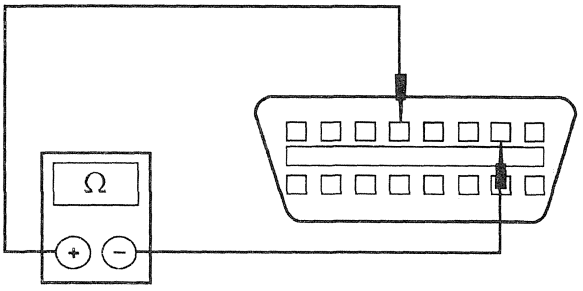 GK5051-A	2 Measure the resistance between DLC C240-7, circuit 70 (LB/W), and DLC C240-4, circuit 57 (BK). • Is the resistance greater than 10,000 ohms? → **Yes** GO to **H8**. → **No** GO to **H6**.
H6 CHECK FOR SHORT TO GROUND BETWEEN DLC C240-7 AND IN-LINE C200	
1 In-Line C200	2 Inspect in-line C200M, C200F for damage.

Official Licensed Product
Ford Motor Company

(Continued)

DIAGNOSIS AND TESTING (Continued)

PINPOINT TEST H: THE MODULE DOES NOT RESPOND TO THE NGS TESTER — PASSENGER SEAT MODULE (PSM) (Continued)

TEST CONDITIONS	TEST DETAILS/RESULTS/ACTIONS
H6 CHECK FOR SHORT TO GROUND BETWEEN DLC C240-7 AND IN-LINE C200 (Continued)	
3 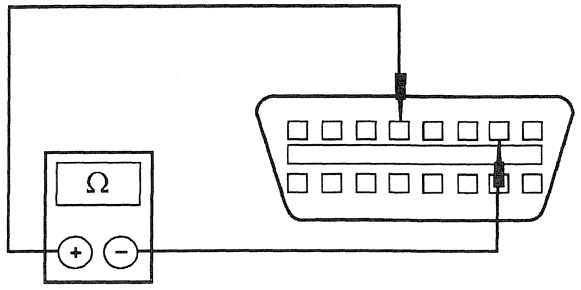 GK5051-A	3 Measure the resistance between DLC C240-7, circuit 70 (LB/W), and DLC C240-4, circuit 57 (BK). • Is the resistance greater than 10,000 ohms? → **Yes** RECONNECT in-line C200. GO to **H7**. → **No** REPAIR in-line C200 and/or circuit 70 (LB/W) between DLC C240 and in-line C200F. TEST the system for normal operation.
H7 CHECK FOR SHORT TO GROUND BETWEEN DLC C240-7 AND IN-LINE C363	
1 In-Line C363	2 Inspect in-line C363M, C363F for damage.
3 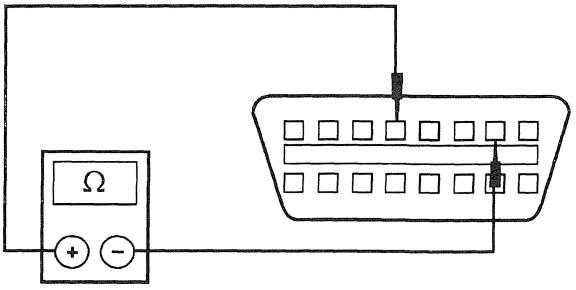 GK5051-A	3 Measure the resistance between DLC C240-7, circuit 70 (LB/W), and DLC C240-4, circuit 57 (BK). • Is the resistance greater than 10,000 ohms? → **Yes** REPAIR in-line C363 and/or circuit 70 (LB/W) between C363M and PSM C320. TEST the system for normal operation. → **No** REPAIR in-line C363 and/or circuit 70 (LB/W) between DLC C200M and in-line C363F. TEST the system for normal operation.

Official Licensed Product
Ford Motor Company

(Continued)

DIAGNOSIS AND TESTING (Continued)

PINPOINT TEST H: THE MODULE DOES NOT RESPOND TO THE NGS TESTER — PASSENGER SEAT MODULE (PSM) (Continued)

TEST CONDITIONS	TEST DETAILS/RESULTS/ACTIONS
H8 CHECK CIRCUIT 70 (LB/W) FOR OPEN	
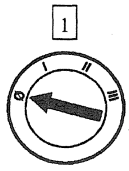 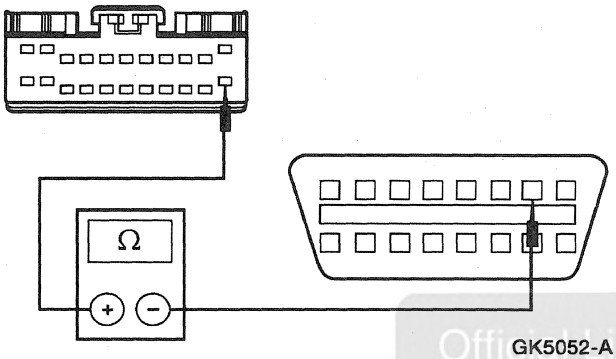 GK5052-A	2 Measure the resistance between DLC C240-7, circuit 70 (LB/W), and PSM C320-22, circuit 70 (LB/W). • Is the resistance less than 5 ohms → **Yes** REPLACE the PSM; REFER to Section 501-10. TEST the system for normal operation. → **No** GO to **H9**.
H9 CHECK FOR OPEN BETWEEN DLC C240-7 AND IN-LINE C200F	
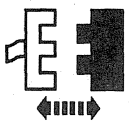 In-Line C200 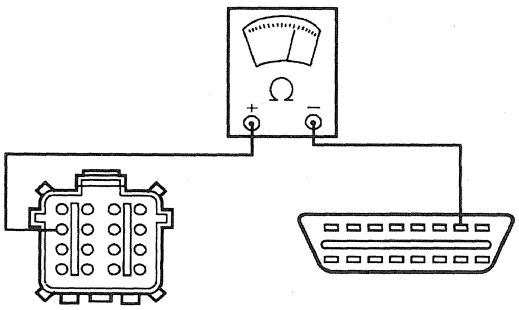 AK0545-B	2 Inspect in-line C200M, C200F for damage. 3 Measure the resistance between DLC C240-7, circuit 70 (LB/W), and in-line C200F-8, circuit 70 (LB/W). • Is the resistance less than 5 ohms? → **Yes** RECONNECT in-line C200. GO to **H10**. → **No** REPAIR in-line C200 and/or circuit 70 (LB/W) between DLC C240 and in-line C200F. TEST the system for normal operation.

Official Licensed Product
Ford Motor Company

(Continued)

DIAGNOSIS AND TESTING (Continued)

PINPOINT TEST H: THE MODULE DOES NOT RESPOND TO THE NGS TESTER — PASSENGER SEAT MODULE (PSM) (Continued)

TEST CONDITIONS	TEST DETAILS/RESULTS/ACTIONS
H10 CHECK FOR OPEN BETWEEN DLC C240-7 AND IN-LINE C363F	
1 In-Line C363 3 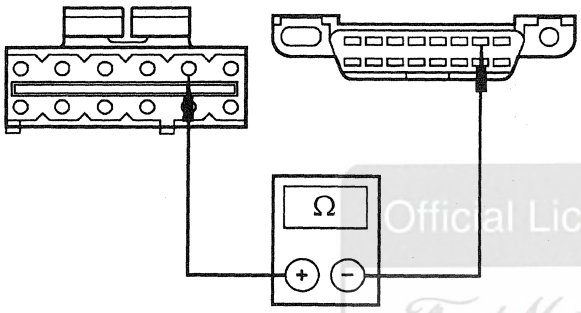 GK7088-A	2 Inspect in-line C363M, C363F for damage. 3 Measure the resistance between DLC C240-7, circuit 70 (LB/W), and in-line C363F-2, circuit 70 (LB/W). • Is the resistance less than 5 ohms? → **Yes** REPAIR in-line C363 and/or circuit 70 (LB/W) between C363M and PSM C320. TEST the system for normal operation. → **No** REPAIR in-line C363 and/or circuit 70 (LB/W) between C200M and in-line C363F. TEST the system for normal operation.

Official Licensed Product
Ford Motor Company

PINPOINT TEST J: THE MODULE DOES NOT RESPOND TO THE NGS TESTER — POWERTRAIN CONTROL MODULE (PCM)

TEST CONDITIONS	TEST DETAILS/RESULTS/ACTIONS
J1 CHECK POWERTRAIN CONTROL MODULE (PCM) C291 AND DATA LINK CONNECTOR (DLC) C240	
1 3 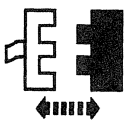 PCM C291	2 Inspect the data link connector (DLC) C240 for damage. Repair as necessary.

(Continued)

DIAGNOSIS AND TESTING (Continued)

PINPOINT TEST J: THE MODULE DOES NOT RESPOND TO THE NGS TESTER — POWERTRAIN CONTROL MODULE (PCM) (Continued)

TEST CONDITIONS	TEST DETAILS/RESULTS/ACTIONS
J1 CHECK POWERTRAIN CONTROL MODULE (PCM) C291 AND DATA LINK CONNECTOR (DLC) C240 (Continued)	
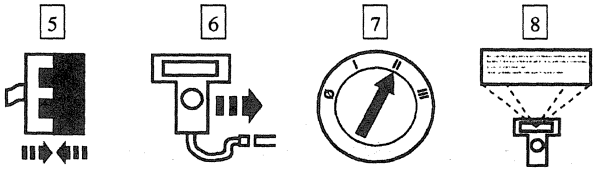 PCM C291 NGS Diagnostic Data Link	4 Inspect the powertrain control module (PCM) C291 for damage. Repair as necessary. • Does the PCM still respond NO RESPONSE on CKT914 (BUS+) or NO RESPONSE on CKT915 (BUS-)? → **Yes** GO to **J2**. → **No** System OK.
J2 CHECK CIRCUIT 914 (T/O) AND 915 (PK/LB) CONCERN	
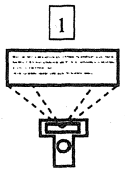 Diagnostic Data Link	• Was the result retrieved PCM: NO RESPONSE ON CKT914 (BUS+)? → **Yes** GO to **J3**. → **No** GO to **J5**.

Official Licensed Product Ford Motor Company

(Continued)

DIAGNOSIS AND TESTING (Continued)

PINPOINT TEST J: THE MODULE DOES NOT RESPOND TO THE NGS TESTER — POWERTRAIN CONTROL MODULE (PCM) (Continued)

TEST CONDITIONS	TEST DETAILS/RESULTS/ACTIONS
J3 CHECK THE RESISTANCE BETWEEN DLC C240-2 AND PCM C291-16 — CIRCUIT 914 (T/O)	
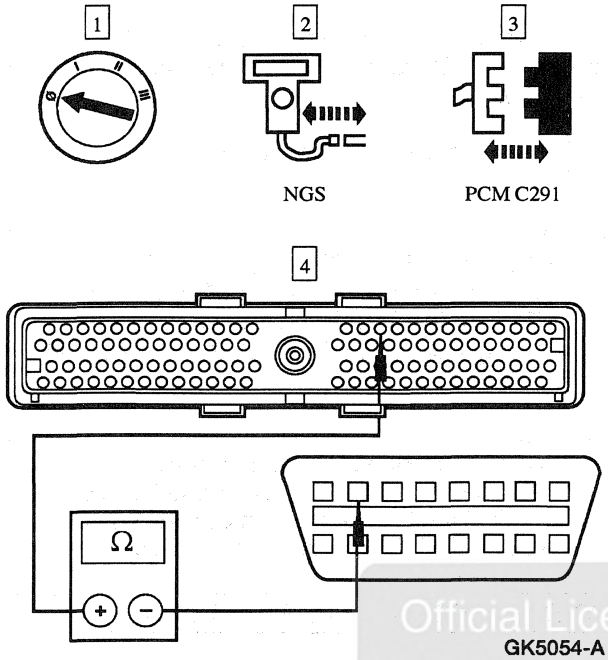	4 Measure the resistance between PCM C291-16, circuit 914 (T/O), and DLC C240-2, circuit 914 (T/O). • Is the resistance less than 5 ohms? → **Yes** REFER to Section 3A in the Powertrain Control/Emissions Diagnosis Manual [2]. → **No** GO to **J4**.
J4 CHECK THE RESISTANCE BETWEEN DLC C240-2 AND IN-LINE C248F — CIRCUIT 914 (T/O)	
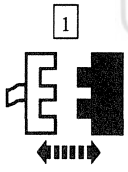	2 Inspect the in-line C248M, C248F for damage.

Official Licensed Product
Ford Motor Company

(Continued)

2 Can be purchased as a separate item.

DIAGNOSIS AND TESTING (Continued)

PINPOINT TEST J: THE MODULE DOES NOT RESPOND TO THE NGS TESTER — POWERTRAIN CONTROL MODULE (PCM) (Continued)

TEST CONDITIONS	TEST DETAILS/RESULTS/ACTIONS
J4 CHECK THE RESISTANCE BETWEEN DLC C240-2 AND IN-LINE C248F — CIRCUIT 914 (T/O) (Continued)	
3 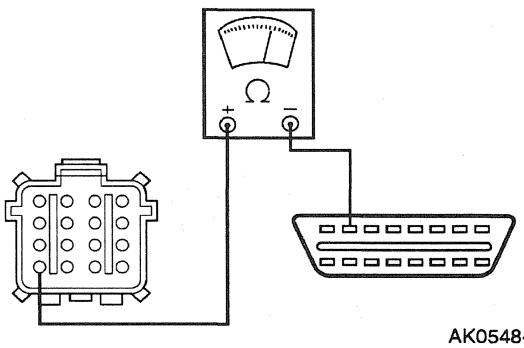 AK0548-B	3 Measure the resistance between DLC C240-2, circuit 914 (T/O), and in-line C248F-16, circuit 914 (T/O). • Is the connector OK and the resistance less than 5 ohms? → **Yes** REPAIR in-line C248 and/or circuit 914 (T/O) between in-line C248M and PCM C291. REFER to Communication Circuit Wiring Repair. TEST the system for normal operation. → **No** REPAIR in-line C248 and/or circuit 914 (T/O) between in-line C248F and DLC C240. REFER to Communication Circuit Wiring Repair. TEST the system for normal operation.
J5 CHECK THE RESISTANCE BETWEEN DLC C240-10 AND PCM C291-15 — CIRCUIT 915 (PK/LB)	
1 2 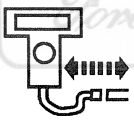 NGS 3 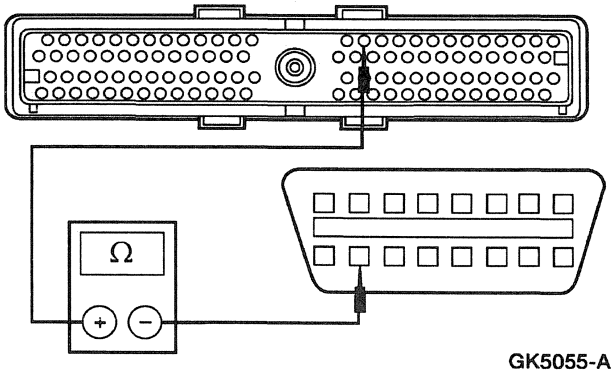 GK5055-A	3 Measure the resistance between PCM C291-15, circuit 915 (PK/LB), and DLC C240-10, circuit 915 (PK/LB). • Is the resistance less than 5 ohms? → **Yes** REFER to Section 3A in the Powertrain Control/Emissions Diagnosis Manual [3]. → **No** GO to **J6**.

(Continued)

3 Can be purchased as a separate item.

DIAGNOSIS AND TESTING (Continued)

PINPOINT TEST J: THE MODULE DOES NOT RESPOND TO THE NGS TESTER — POWERTRAIN CONTROL MODULE (PCM) (Continued)

TEST CONDITIONS	TEST DETAILS/RESULTS/ACTIONS
J6 CHECK THE RESISTANCE BETWEEN DLC C240-10 AND IN-LINE C248M — CIRCUIT 915 (PK/LB)	
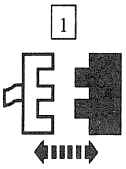 In-Line C248 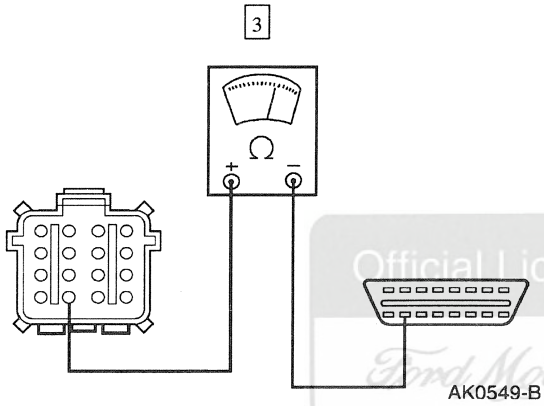 AK0549-B	2 Inspect the in-line C248M, C248F for damage. 3 Measure the resistance between DLC C240-10, circuit 915 (PK/LB), and in-line C248F-15, circuit 915 (PK/LB). • Is the connector OK and the resistance less than 5 ohms? → **Yes** REPAIR in-line C248 and/or circuit 915 (PK/LB) between in-line C248M and PCM C291. REFER to Communication Circuit Wiring Repair. TEST the system for normal operation. → **No** REPAIR in-line C248 and/or circuit 915 (PK/LB) between in-line C248F and DLC C240. REFER to Communication Circuit Wiring Repair. TEST the system for normal operation.

PINPOINT TEST K: THE MODULE DOES NOT RESPOND TO THE NGS TESTER — STEERING COLUMN / IGNITION / LIGHTING (SCIL) MODULE

TEST CONDITIONS	TEST DETAILS/RESULTS/ACTIONS
K1 CHECK STEERING COLUMN / IGNITION / LIGHTING (SCIL) MODULE C288 AND DATA LINK CONNECTOR (DLC) C240	
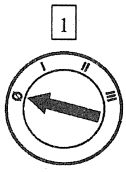	2 Inspect the data link connector (DLC) C240 for damage. Repair as necessary.

(Continued)

DIAGNOSIS AND TESTING (Continued)

PINPOINT TEST K: THE MODULE DOES NOT RESPOND TO THE NGS TESTER — STEERING COLUMN / IGNITION / LIGHTING (SCIL) MODULE (Continued)

TEST CONDITIONS	TEST DETAILS/RESULTS/ACTIONS
K1 CHECK STEERING COLUMN / IGNITION / LIGHTING (SCIL) MODULE C288 AND DATA LINK CONNECTOR (DLC) C240 (Continued)	
3 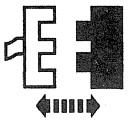 SCIL Module C288	4 Inspect the steering column/ignition/lighting (SCIL) module C288 for damage. Repair as necessary.
5 6 7 8 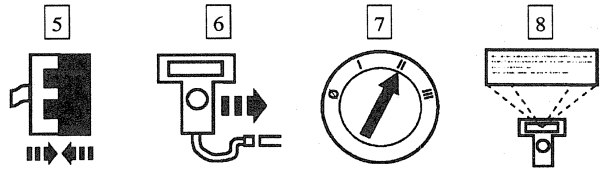 SCIL Module C288 NGS Diagnostic Data Link	• Does the SCIL module still respond NO RESPONSE on CKT914 (BUS+) or NO RESPONSE on CKT915 (BUS-)? → **Yes** GO to **K2**. → **No** System OK.
K2 CHECK CIRCUIT 914 (T/O) AND 915 (PK/LB) CONCERN	
1 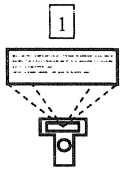 Diagnostic Data Link	• Was the result retrieved SCIL: NO RESPONSE ON CKT914 (BUS+)? → **Yes** GO to **K3**. → **No** GO to **K4**.

Official Licensed Product
Ford Motor Company

(Continued)

DIAGNOSIS AND TESTING (Continued)

PINPOINT TEST K: THE MODULE DOES NOT RESPOND TO THE NGS TESTER — STEERING COLUMN / IGNITION / LIGHTING (SCIL) MODULE (Continued)

TEST CONDITIONS	TEST DETAILS/RESULTS/ACTIONS
K3 CHECK THE RESISTANCE BETWEEN DLC C240-2 AND SCIL MODULE C288-1 — CIRCUIT 914 (T/O)	
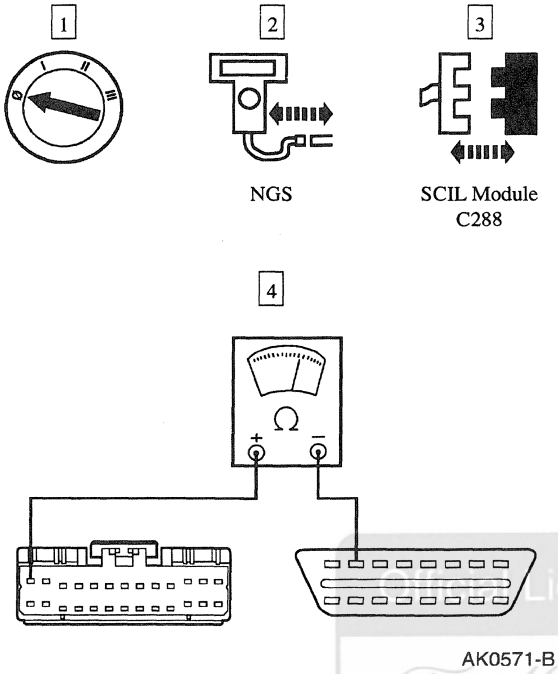	4 Measure the resistance between SCIL module C288-1, circuit 914 (T/O), and DLC C240-2, circuit 914 (T/O). • Is the resistance less than 5 ohms? → **Yes** GO to **K4**. → **No** REPAIR circuit 914 (T/O) between SCIL module C288 and DLC C240. REFER to Communication Circuit Wiring Repair. TEST the system for normal operation.
K4 CHECK THE RESISTANCE BETWEEN DLC C240-10 AND SCIL MODULE C288-2 — CIRCUIT 915 (PK/LB)	
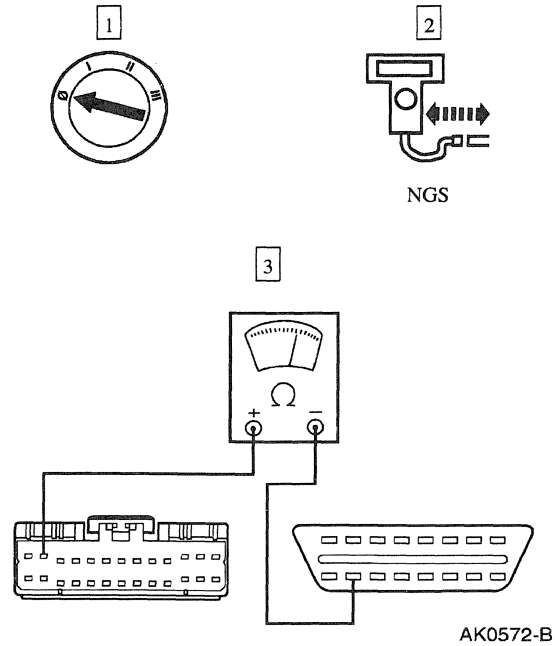	3 Measure the resistance between SCIL module C288-2, circuit 915 (PK/LB), and DLC C240-10, circuit 915 (PK/LB). • Is the resistance less than 5 ohms? → **Yes** REPLACE the SCIL module; REFER to Section 419-10. TEST the system for normal operation. → **No** REPAIR circuit 915 (PK/LB) between SCIL module C288 and DLC C240. REFER to Communication Circuit Wiring Repair. TEST the system for normal operation.

Ford Motor Company Licensed Publication

DIAGNOSIS AND TESTING (Continued)

PINPOINT TEST L: THE MODULE DOES NOT RESPOND TO THE NGS TESTER — VARIABLE LOAD CONTROL MODULE (VLCM)

TEST CONDITIONS	TEST DETAILS/RESULTS/ACTIONS
L1 CHECK VARIABLE LOAD CONTROL MODULE (VLCM) C106 AND DATA LINK CONNECTOR (DLC) C240	
1 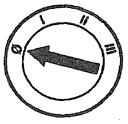	
	2 Inspect the data link connector (DLC) C240 for damage. Repair as necessary.
3 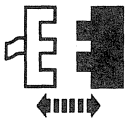 VLCM C106	
	4 Inspect the VLCM C106 for damage. Repair as necessary.
5 6 7 8 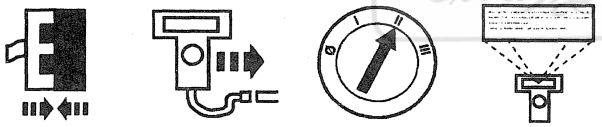 VLCM C106 NGS Diagnostic Data Link	• Does the VLCM still respond NO RESPONSE on CKT914 (BUS+) or NO RESPONSE on CKT915 (BUS-)? → **Yes** GO to **L2**. → **No** System OK.

Official Licensed Product Ford Motor Company

(Continued)

DIAGNOSIS AND TESTING (Continued)

PINPOINT TEST L: THE MODULE DOES NOT RESPOND TO THE NGS TESTER — VARIABLE LOAD CONTROL MODULE (VLCM) (Continued)

TEST CONDITIONS	TEST DETAILS/RESULTS/ACTIONS
L2 CHECK CIRCUIT 914 (T/O) AND 915 (PK/LB) CONCERN	
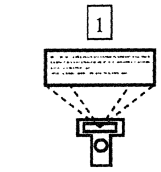 Diagnostic Data Link	• Was the result retrieved VLCM: NO RESPONSE ON CKT914 (BUS+)? → **Yes** GO to **L3**. → **No** GO to **L6**.
L3 CHECK THE RESISTANCE BETWEEN DLC C240-2 AND VLCM C106-21 — CIRCUIT 914 (T/O)	
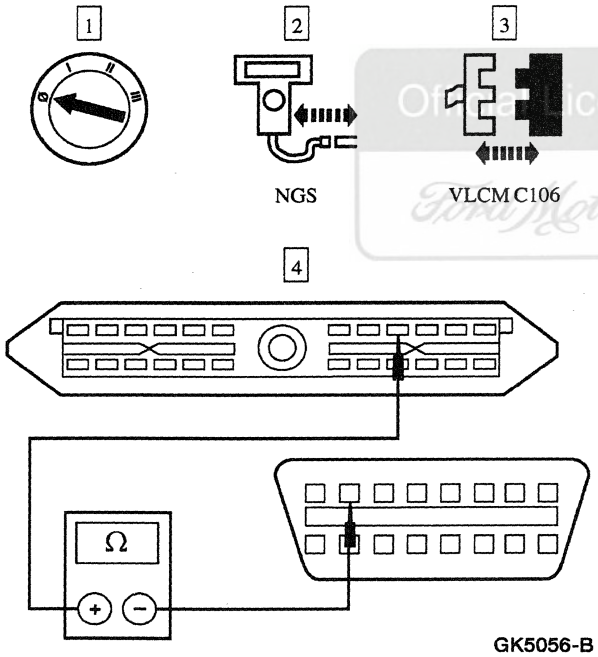	4 Measure the resistance between VLCM C106-21, circuit 914 (T/O), and DLC C240-2, circuit 914 (T/O). • Is the resistance less than 5 ohms? → **Yes** REPLACE the VLCM. TEST the system for normal operation. → **No** GO to **L4**.

Ford Motor Company

(Continued)

DIAGNOSIS AND TESTING (Continued)

PINPOINT TEST L: THE MODULE DOES NOT RESPOND TO THE NGS TESTER — VARIABLE LOAD CONTROL MODULE (VLCM) (Continued)

TEST CONDITIONS	TEST DETAILS/RESULTS/ACTIONS
L4 CHECK THE RESISTANCE BETWEEN DLC C240-2 AND IN-LINE C248F — CIRCUIT 914 (T/O)	
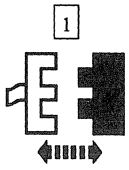 In-Line C248	2 Inspect the in-line C248M, C248F for damage.
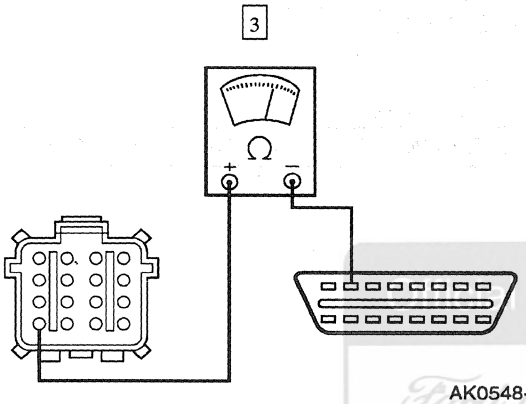 AK0548-B	3 Measure the resistance between data link connector (DLC) C240-2, circuit 914 (T/O), and in-line C248F-16, circuit 914 (T/O). • Is the connector OK and the resistance less than 5 ohms? → **Yes** RECONNECT in-line C248. GO to **L5**. → **No** REPAIR in-line C248 and/or circuit 914 (T/O) between in-line C248F and DLC C240. REFER to Communication Circuit Wiring Repair. TEST the system for normal operation.
L5 CHECK THE RESISTANCE BETWEEN DLC C240-2 AND IN-LINE C122M — CIRCUIT 914 (T/O)	
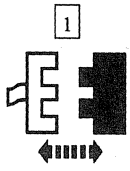 In-Line C122	2 Inspect the in-line C122M, C122F for damage.

(Continued)

Ford Licensed Product
Ford Motor Company

DIAGNOSIS AND TESTING (Continued)

PINPOINT TEST L: THE MODULE DOES NOT RESPOND TO THE NGS TESTER — VARIABLE LOAD CONTROL MODULE (VLCM) (Continued)

TEST CONDITIONS	TEST DETAILS/RESULTS/ACTIONS
L5 CHECK THE RESISTANCE BETWEEN DLC C240-2 AND IN-LINE C122M — CIRCUIT 914 (T/O) (Continued)	
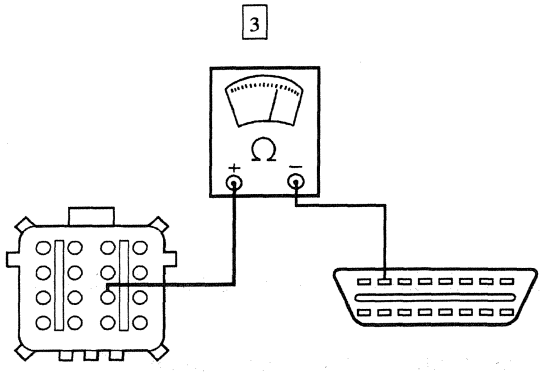 AK0550-B	3 Measure the resistance between data link connector (DLC) C240-2, circuit 914 (T/O), and in-line C122M-11, circuit 914 (T/O). • Is the connector OK and the resistance less than 5 ohms? → **Yes** REPAIR in-line C122 and/or circuit 914 (T/O) between in-line C122F and VLCM C106. REFER to Communication Circuit Wiring Repair. TEST the system for normal operation → **No** REPAIR in-line C122 and/or circuit 914 (T/O) between in-line C248M and in-line C122M. REFER to Communication Circuit Wiring Repair. TEST the system for normal operation.
L6 CHECK THE RESISTANCE BETWEEN DLC C240-10 AND VLCM C106-23 — CIRCUIT 915 (PK/LB)	
NGS 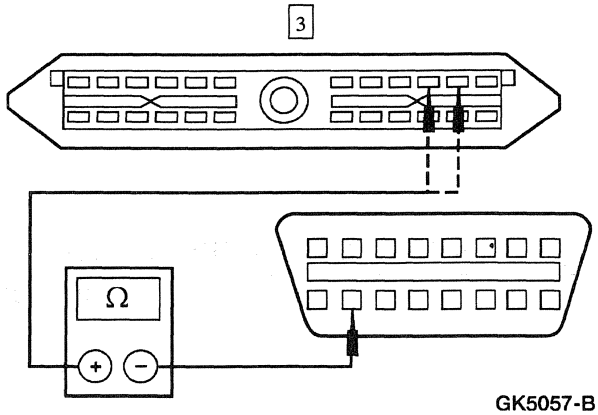 GK5057-B	3 Measure the resistance between VLCM C106-23 (without DRL) or C106-22 (with DRL), circuit 915 (PK/LB), and DLC C240-10, circuit 915 (PK/LB). • Is the resistance less than 5 ohms? → **Yes** REPLACE the VLCM. TEST the system for normal operation. → **No** GO to **L7**.

(Continued)

DIAGNOSIS AND TESTING (Continued)

PINPOINT TEST L: THE MODULE DOES NOT RESPOND TO THE NGS TESTER — VARIABLE LOAD CONTROL MODULE (VLCM) (Continued)

TEST CONDITIONS	TEST DETAILS/RESULTS/ACTIONS
L7 CHECK THE RESISTANCE BETWEEN DLC C240-10 AND IN-LINE C248F — CIRCUIT 915 (PK/LB)	
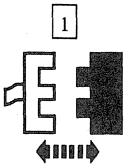 In-Line C248 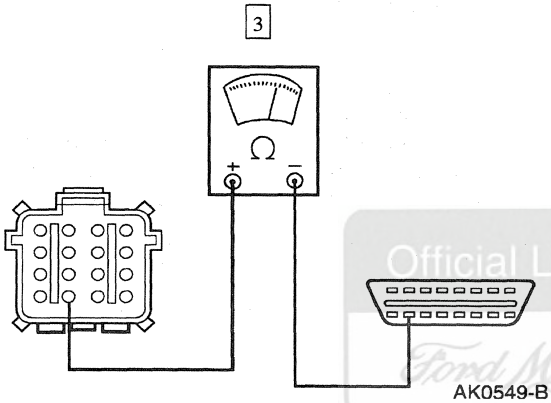 AK0549-B	2 Inspect the in-line C248M, C248F for damage. 3 Measure the resistance between DLC C240-10, circuit 915 (PK/LB), and in-line C248F-15, circuit 915 (PK/LB). • Is the connector OK and the resistance less than 5 ohms? → **Yes** RECONNECT in-line C248. GO to **L8**. → **No** REPAIR in-line C248 and/or circuit 915 (PK/LB) between in-line C248F and DLC C240. REFER to Communication Circuit Wiring Repair. TEST the system for normal operation.
L8 CHECK THE RESISTANCE BETWEEN DLC C240-10 AND IN-LINE C122M — CIRCUIT 915 (PK/LB)	
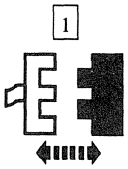 In-Line C122	2 Inspect the in-line C122M, C122F for damage.

(Continued)

Official Licensed Product
Ford Motor Company

DIAGNOSIS AND TESTING (Continued)

PINPOINT TEST L: THE MODULE DOES NOT RESPOND TO THE NGS TESTER — VARIABLE LOAD CONTROL MODULE (VLCM) (Continued)

TEST CONDITIONS	TEST DETAILS/RESULTS/ACTIONS
L8 CHECK THE RESISTANCE BETWEEN DLC C240-10 AND IN-LINE C122M — CIRCUIT 915 (PK/LB) (Continued)	
3 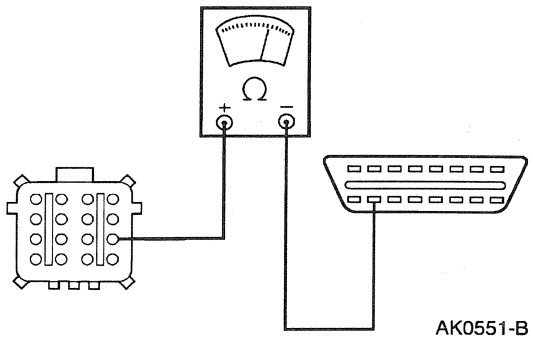 AK0551-B	3 Measure the resistance between DLC C240-10, circuit 915 (PK/LB), and in-line C122M-12, circuit 915 (PK/LB). • Is the connector OK and the resistance less than 5 ohms? → **Yes** REPAIR in-line C122 and/or circuit 915 (PK/LB) between in-line C122F and VLCM C106. REFER to Communication Circuit Wiring Repair. TEST the system for normal operation. → **No** REPAIR in-line C122 and/or circuit 915 (PK/LB) between in-line C248M and in-line C122M. REFER to Communication Circuit Wiring Repair. TEST the system for normal operation.

Official Licensed Product Ford Motor Company

PINPOINT TEST M: NO MODULE / NETWORK COMMUNICATION — SCP LINK

TEST CONDITIONS	TEST DETAILS/RESULTS/ACTIONS
M1 CHECK NGS TESTER CONNECTOR	
1 GK2632-A	1 Inspect NGS Tester terminals. • Are the terminals OK? → **Yes** GO to **M2**. → **No** REPAIR NGS Tester connector. TEST the system for normal operation.

(Continued)

DIAGNOSIS AND TESTING (Continued)

PINPOINT TEST M: NO MODULE / NETWORK COMMUNICATION — SCP LINK (Continued)

TEST CONDITIONS	TEST DETAILS/RESULTS/ACTIONS
M2 CHECK DATA LINK CONNECTOR (DLC) C240	
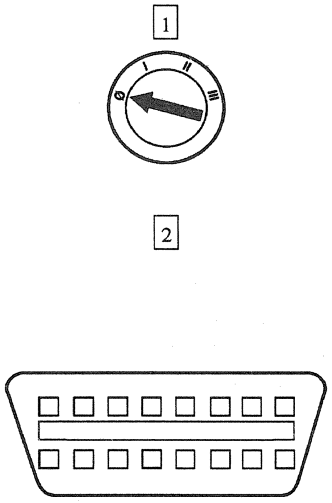 GK5058-A	2 Inspect DLC C240 pins. • Are the pins OK? → **Yes** GO to **M3**. → **No** REPAIR DLC C240. TEST the system for normal operation.
M3 PERFORM THE DIAGNOSTIC DATA LINK — RETRIEVE FAULT CODES	
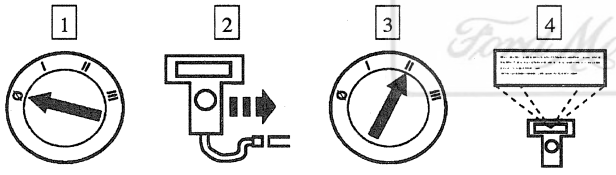	• Is SYSTEM PASSED obtained? → **Yes** System OK. → **No** If CKT914=00000688, GO to **M4**. If CKT915=00000688, GO to **M5**. If CKT914=ALL ECUS NO RESP/NOT EQUIP, GO to **M6**. If CKT915=ALL ECUS NO RESP/NOT EQUIP, GO to **M6**.

(Continued)

Ford Motor Company

DIAGNOSIS AND TESTING (Continued)

PINPOINT TEST M: NO MODULE / NETWORK COMMUNICATION — SCP LINK (Continued)

TEST CONDITIONS	TEST DETAILS/RESULTS/ACTIONS
M4 CHECK THE RESISTANCE BETWEEN DATA LINK CONNECTOR (DLC) C240-2 AND IN-LINE C248F — CIRCUIT 914 (T/O)	
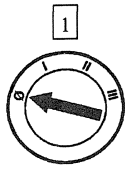 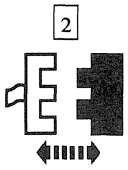 In-Line C248	3 Inspect the in-line C248M, C248F for damage.
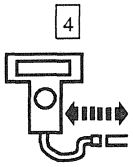 NGS	
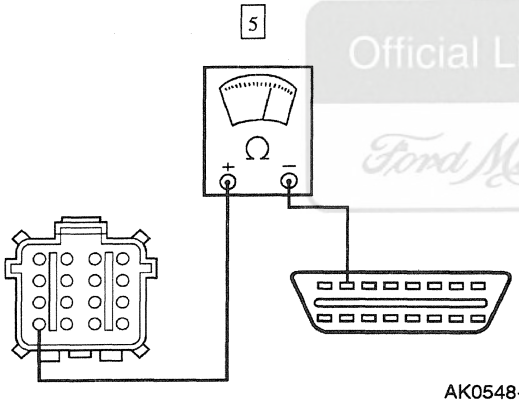 AK0548-B	5 Measure the resistance between data link connector (DLC) C240-2, circuit 914 (T/O), and in-line C248F-16, circuit 914 (T/O). • Is the connector OK and the resistance less than 5 ohms? → **Yes** REFER to Symptom Chart for the module in question. → **No** REPAIR in-line C248 and/or circuit 914 (T/O) between in-line C248F and DLC C240. REFER to Communication Circuit Wiring Repair. TEST the system for normal operation.
M5 CHECK THE RESISTANCE BETWEEN DATA LINK CONNECTOR (DLC) C240-10 AND IN-LINE C248F — CIRCUIT 915 (PK/LB)	
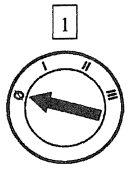 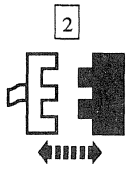 In-Line C248	3 Inspect the in-line C248M, C248F for damage.

(Continued)

Official Licensed Ford Motor Company

DIAGNOSIS AND TESTING (Continued)

PINPOINT TEST M: NO MODULE / NETWORK COMMUNICATION — SCP LINK (Continued)

TEST CONDITIONS	TEST DETAILS/RESULTS/ACTIONS
M5 CHECK THE RESISTANCE BETWEEN DATA LINK CONNECTOR (DLC) C240-10 AND IN-LINE C248F — CIRCUIT 915 (PK/LB) (Continued)	
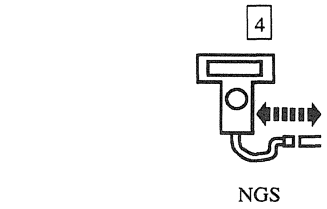 NGS 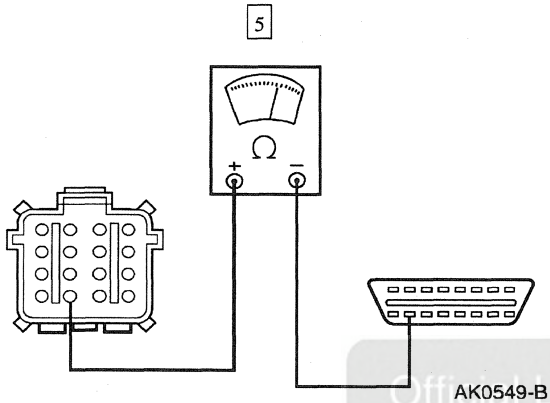 AK0549-B	5 Measure the resistance between data link connector (DLC) C240-10, circuit 915 (PK/LB), and in-line C248F-15, circuit 915 (PK/LB). • Is the connector OK and the resistance less than 5 ohms? → **Yes** REFER to Symptom Chart for the module in question. → **No** REPAIR in-line C248 and/or circuit 915 (PK/LB) between in-line C248F and DLC C240. REFER to Communication Circuit Wiring Repair. TEST the system for normal operation.
M6 DETERMINE WHICH SIDE OF IN-LINE C248 THE CONCERN IS ON	
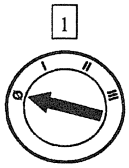 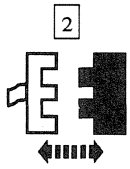 In-Line C248 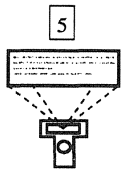 Diagnostic Data Link	3 Inspect in-line C248M, C248F for damage. Repair as necessary.

(Continued)

DIAGNOSIS AND TESTING (Continued)

PINPOINT TEST M: NO MODULE / NETWORK COMMUNICATION — SCP LINK (Continued)

TEST CONDITIONS	TEST DETAILS/RESULTS/ACTIONS
M6 DETERMINE WHICH SIDE OF IN-LINE C248 THE CONCERN IS ON (Continued)	
	• Was the result retrieved: CKT914 = ALL ECUS NO RESP/NOT EQUIP or CKT915 = ALL ECUS NO RESP/NOT EQUIP? → **Yes** GO to **M11**. → **No** RECONNECT in-line C248. GO to **M7**.
M7 DETERMINE WHICH SIDE OF IN-LINE C122 THE CONCERN IS ON	
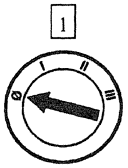 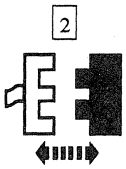 In-Line C122 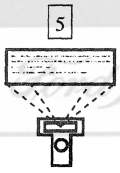 Diagnostic Data Link	3 Inspect in-line C122M, C122F for damage. Repair as necessary. • Was the result retrieved: CKT914 = ALL ECUS NO RESP/NOT EQUIP or CKT915 = ALL ECUS NO RESP/NOT EQUIP? → **Yes** GO to **M10**. → **No** RECONNECT in-line C122. GO to **M8**.
M8 CHECK THE ANTI-LOCK BRAKE CONTROL MODULE FOR THE SOURCE OF THE CONCERN	
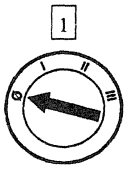 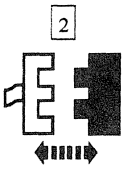 Anti-Lock Brake Control Module C114	3 Inspect the anti-lock brake control module C114 for damage. Repair as necessary.

(Continued)

Official Licensed Product Motor Company

DIAGNOSIS AND TESTING (Continued)

PINPOINT TEST M: NO MODULE / NETWORK COMMUNICATION — SCP LINK (Continued)

TEST CONDITIONS	TEST DETAILS/RESULTS/ACTIONS
M8 CHECK THE ANTI-LOCK BRAKE CONTROL MODULE FOR THE SOURCE OF THE CONCERN (Continued)	
4 5 Diagnostic Data Link	• Was the result retrieved: CKT914 = ALL ECUS NO RESP/NOT EQUIP or CKT915 = ALL ECUS NO RESP/NOT EQUIP? → **Yes** GO to **M9**. → **No** REPLACE the anti-lock brake control module; REFER to Section 206-09. TEST the system for normal operation.
M9 CHECK THE VARIABLE LOAD CONTROL MODULE (VLCM) FOR THE SOURCE OF THE CONCERN	
1 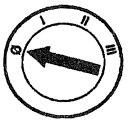 2 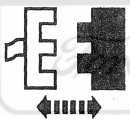 VLCM C106	3 Inspect the variable load control module (VLCM) C106 for damage. Repair as necessary.
4 5 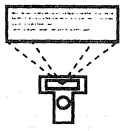 Diagnostic Data Link	

Official Licensed Product Ford Motor Company

(Continued)

DIAGNOSIS AND TESTING (Continued)

PINPOINT TEST M: NO MODULE / NETWORK COMMUNICATION — SCP LINK (Continued)

TEST CONDITIONS	TEST DETAILS/RESULTS/ACTIONS
M9 CHECK THE VARIABLE LOAD CONTROL MODULE (VLCM) FOR THE SOURCE OF THE CONCERN (Continued)	
	• Was the result retrieved: CKT914 = ALL ECUS NO RESP/NOT EQUIP or CKT915 = ALL ECUS NO RESP/NOT EQUIP? → **Yes** REPAIR circuit 914 (T/O) and/or circuit 915 (PK/LB) between anti-lock brake control module C114, VLCM C106, EVAC and fill C1030 (circuit 914 [T/O] only), and in-line C122F. REFER to Communication Circuit Wiring Repair. TEST the system for normal operation → **No** REPLACE the VLCM. TEST the system for normal operation.
M10 CHECK THE POWERTRAIN CONTROL MODULE (PCM) FOR THE SOURCE OF THE CONCERN	
1 2 PCM C291 4 5 Diagnostic Data Link	3 Inspect the powertrain control module (PCM) C291 for damage. Repair as necessary.

Ford Motor Company

(Continued)

DIAGNOSIS AND TESTING (Continued)

PINPOINT TEST M: NO MODULE / NETWORK COMMUNICATION — SCP LINK (Continued)

TEST CONDITIONS	TEST DETAILS/RESULTS/ACTIONS
M10 CHECK THE POWERTRAIN CONTROL MODULE (PCM) FOR THE SOURCE OF THE CONCERN (Continued)	
	• Was the result retrieved: CKT914 = ALL ECUS NO RESP/NOT EQUIP or CKT915 = ALL ECUS NO RESP/NOT EQUIP? → **Yes** REPAIR circuit 914 (T/O) and/or circuit 915 (PK/LB) between PCM C291, in-line C248M, and in-line C122M. REFER to Communication Circuit Wiring Repair. TEST the system for normal operation. → **No** REFER to Section 3A in the Powertrain Control/Emissions Diagnosis Manual [4]. TEST the system for normal operation.
M11 DETERMINE WHICH SIDE OF IN-LINE C214 THE CONCERN IS ON	
1 2 In-Line C214 4 5 Diagnostic Data Link	3 Inspect in-line 214M, C214F for damage. Repair as necessary. • Was the result retrieved: CKT914 = ALL ECUS NO RESP/NOT EQUIP or CKT915 = ALL ECUS NO RESP/NOT EQUIP? → **Yes** GO to **M12**. → **No** RECONNECT in-line C214. GO to **M16**.

Ford Motor Company Official Licensed Product

(Continued)

4 Can be purchased as a separate item.

DIAGNOSIS AND TESTING (Continued)

PINPOINT TEST M: NO MODULE / NETWORK COMMUNICATION — SCP LINK (Continued)

TEST CONDITIONS	TEST DETAILS/RESULTS/ACTIONS
M12 CHECK THE STEERING COLUMN / IGNITION / LIGHTING (SCIL) MODULE FOR THE SOURCE OF THE CONCERN	
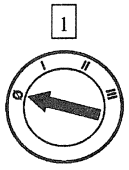 1 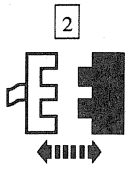 2 SCIL Module C288 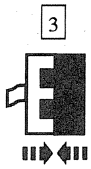 3 In-Line C214	4 Inspect the steering column/ignition/lighting (SCIL) module C288 for damage. Repair as necessary.
 5 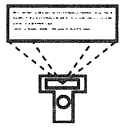 6 Diagnostic Data Link	• Was the result retrieved: CKT914 = ALL ECUS NO RESP/NOT EQUIP or CKT915 = ALL ECUS NO RESP/NOT EQUIP? → **Yes** GO to **M13**. → **No** REPLACE the SCIL module; REFER to Section 419-10. TEST the system for normal operation.
M13 CHECK THE HYBRID ELECTRONIC CLUSTER (HEC) FOR THE SOURCE OF THE CONCERN	
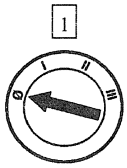 1 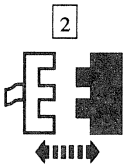 2 HEC C293	3 Inspect the hybrid electronic cluster (HEC) C293 for damage. Repair as necessary.
 4 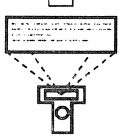 5 Diagnostic Data Link	

(Continued)

Official Licensed Product
Ford Motor Company

DIAGNOSIS AND TESTING (Continued)

PINPOINT TEST M: NO MODULE / NETWORK COMMUNICATION — SCP LINK (Continued)

TEST CONDITIONS	TEST DETAILS/RESULTS/ACTIONS
M13 CHECK THE HYBRID ELECTRONIC CLUSTER (HEC) FOR THE SOURCE OF THE CONCERN (Continued)	
	• Was the result retrieved: CKT914 = ALL ECUS NO RESP/NOT EQUIP or CKT915 = ALL ECUS NO RESP/NOT EQUIP? → **Yes** GO to **M14**. → **No** REPLACE the HEC; REFER to Section 413-01. TEST the system for normal operation.
M14 CHECK THE ELECTRONIC AUTOMATIC TEMPERATURE CONTROL (EATC) MODULE FOR THE SOURCE OF THE CONCERN	
1 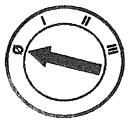 2 EATC Module C273 4 5 Diagnostic Data Link	3 Inspect the electronic automatic temperature control (EATC) module C273 for damage. Repair as necessary. • Was the result retrieved: CKT914 = ALL ECUS NO RESP/NOT EQUIP or CKT915 = ALL ECUS NO RESP/NOT EQUIP? → **Yes** GO to **M15**. → **No** REPLACE the EATC module; REFER to Section 412-00. TEST the system for normal operation.

Official Licensed Product
Ford Motor Company®

(Continued)

DIAGNOSIS AND TESTING (Continued)

PINPOINT TEST M: NO MODULE / NETWORK COMMUNICATION — SCP LINK (Continued)

TEST CONDITIONS	TEST DETAILS/RESULTS/ACTIONS
M15 CHECK THE MESSAGE CENTER MODULE (MSM) FOR THE SOURCE OF THE CONCERN	
1 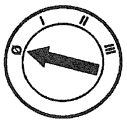 2 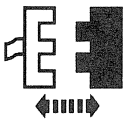 MSM C246	3 Inspect the message center module (MSM) C246 for damage. Repair as necessary.
4 5 Diagnostic Data Link	• Was the result retrieved: CKT914 = ALL ECUS NO RESP/NOT EQUIP or CKT915 = ALL ECUS NO RESP/NOT EQUIP? → **Yes** REPAIR circuit 914 (T/O) and/or circuit 915 (PK/LB) between SCIL module C288, EATC module C273, MSM C246, HEC C293, in-line C214M, and in-line C248F. REFER to Communication Circuit Wiring Repair. TEST the system for normal operation. → **No** REPLACE the MSM; REFER to Section 413-08. TEST the system for normal operation.
M16 DETERMINE WHICH SIDE OF IN-LINE C301 THE CONCERN IS ON	
1 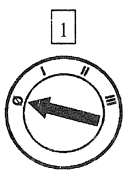 2 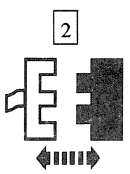 In-Line C301	3 Inspect in-line C301M, C301F for damage. Repair as necessary.

(Continued)

Official Licensed Product
Ford Motor Company

DIAGNOSIS AND TESTING (Continued)

PINPOINT TEST M: NO MODULE / NETWORK COMMUNICATION — SCP LINK (Continued)

TEST CONDITIONS	TEST DETAILS/RESULTS/ACTIONS
M16 DETERMINE WHICH SIDE OF IN-LINE C301 THE CONCERN IS ON (Continued)	
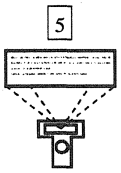 Diagnostic Data Link	• Was the result retrieved: CKT914 = ALL ECUS NO RESP/NOT EQUIP or CKT915 = ALL ECUS NO RESP/NOT EQUIP? → **Yes** GO to **M18**. → **No** RECONNECT in-line C301. GO to **M17**.
M17 CHECK THE DRIVER SEAT MODULE (DSM) FOR THE SOURCE OF THE CONCERN	
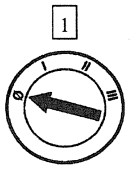 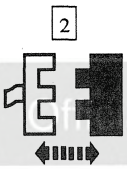 DSM C311	3 Inspect the driver seat module (DSM) C311 for damage. Repair as necessary.
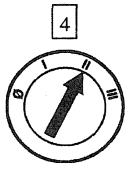 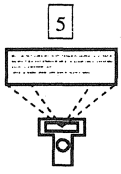 Diagnostic Data Link	• Was the result retrieved: CKT914 = ALL ECUS NO RESP/NOT EQUIP or CKT915 = ALL ECUS NO RESP/NOT EQUIP? → **Yes** REPAIR circuit 914 (T/O) and/or circuit 915 (PK/LB) between DSM C311 and in-line C301M. REFER to Communication Circuit Wiring Repair. TEST the system for normal operation. → **No** REPLACE the DSM; REFER to Section 419-10. TEST the system for normal operation

Digital Licensed Product Ford Motor Company

(Continued)

DIAGNOSIS AND TESTING (Continued)

PINPOINT TEST M: NO MODULE / NETWORK COMMUNICATION — SCP LINK (Continued)

TEST CONDITIONS	TEST DETAILS/RESULTS/ACTIONS
M18 CHECK THE DRIVER DOOR MODULE (DDM) FOR THE SOURCE OF THE CONCERN	
1 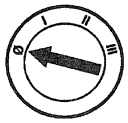 2 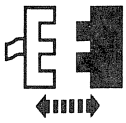 DDM C455 4 5 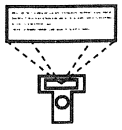 Diagnostic Data Link	3 Inspect the driver door module (DDM) C455 for damage. Repair as necessary. • Was the result retrieved: CKT914 = ALL ECUS NO RESP/NOT EQUIP or CKT915 = ALL ECUS NO RESP/NOT EQUIP? → **Yes** GO to **M19**. → **No** REPLACE the DDM; REFER to Section 419-10. TEST the system for normal operation.
M19 VERIFY THE VEHICLE IS EQUIPPED WITH THE CELLULAR PHONE MODULE (CPM)	
	1 Verify the vehicle is equipped with the cellular phone module (CPM). • Is the vehicle equipped with a cellular phone? → **Yes** GO to **M20**. → **No** REPLACE circuit 914 (T/O) and/or circuit 915 (PK/LB) between DDM C455, in-line C301F, and in-line C214F. REFER to Communication Circuit Wiring Repair. TEST the system for normal operation.

(Continued)

Official Licensed Product
Ford Motor Company

DIAGNOSIS AND TESTING (Continued)

PINPOINT TEST M: NO MODULE / NETWORK COMMUNICATION — SCP LINK (Continued)

TEST CONDITIONS	TEST DETAILS/RESULTS/ACTIONS
M20 DETERMINE WHICH SIDE OF IN-LINE C307 THE CONCERN IS ON	
1 2 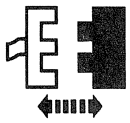 In-Line C307	3 Inspect in-line C307M, C307F for damage. Repair as necessary.
4 5 Diagnostic Data Link	• Was the result retrieved: CKT914 = ALL ECUS NO RESP/NOT EQUIP or CKT915 = ALL ECUS NO RESP/NOT EQUIP? → **Yes** REPAIR circuit 914 (T/O) and/or circuit 915 (PK/LB) between DDM C455, in-line C301F, in-line C214F, and in-line C307F. REFER to Communication Circuit Wiring Repair. TEST the system for normal operation → **No** RECONNECT in-line C307. GO to **M21**.
M21 CHECK THE CELLULAR PHONE MODULE (CPM) FOR THE SOURCE OF THE CONCERN	
1 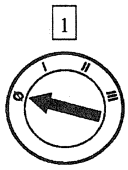 2 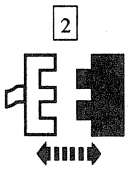 CPM C402	3 Inspect the cellular phone module (CPM) C402 for damage. Repair as necessary.

(Continued)

Official Licensed Product
Ford Motor Company

DIAGNOSIS AND TESTING (Continued)

PINPOINT TEST M: NO MODULE / NETWORK COMMUNICATION — SCP LINK (Continued)

TEST CONDITIONS	TEST DETAILS/RESULTS/ACTIONS
M21 CHECK THE CELLULAR PHONE MODULE (CPM) FOR THE SOURCE OF THE CONCERN (Continued)	
4 5 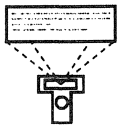 Diagnostic Data Link	• Was the result retrieved: CKT914 = ALL ECUS NO RESP/NOT EQUIP or CKT915 = ALL ECUS NO RESP/NOT EQUIP? → **Yes** REPAIR circuit 914 (T/O) and/or circuit 915 (PK/LB) between CPM C402 and in-line C307M. REFER to Communication Circuit Wiring Repair. TEST the system for normal operation → **No** REPLACE the CPM; REFER to Section 419-08. TEST the system for normal operation.

PINPOINT TEST N: NO MODULE / NETWORK COMMUNICATION

TEST CONDITIONS	TEST DETAILS/RESULTS/ACTIONS
N1 CHECK NGS TESTER CONNECTOR	
1 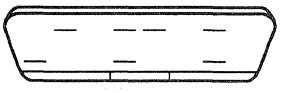 GK2632-A	1 Inspect NGS Tester terminals. • Are the terminals OK? → **Yes** GO to **N2**. → **No** REPAIR NGS Tester connector. TEST the system for normal operation.

(Continued)

Official Licensed Publication Ford Motor Company®

DIAGNOSIS AND TESTING (Continued)

PINPOINT TEST N: NO MODULE / NETWORK COMMUNICATION (Continued)

TEST CONDITIONS	TEST DETAILS/RESULTS/ACTIONS
N2 CHECK DATA LINK CONNECTOR (DLC) C240	
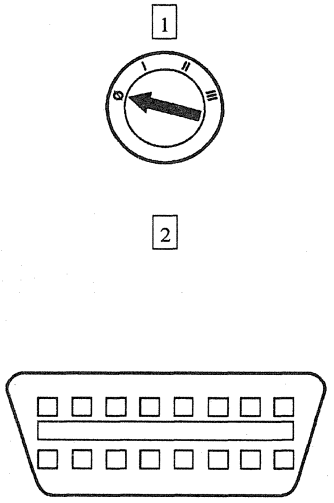	2 Inspect DLC C240 pins. • Are the pins OK? → **Yes** GO to **N3**. → **No** REPAIR DLC C240. TEST the system for normal operation.
N3 CHECK FUSE 38 (10A)	
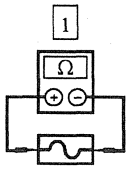	• Is the fuse OK? → **Yes** REINSTALL fuse 38 (10A). GO to **N5**. → **No** GO to **N4**.
N4 CHECK THE SYSTEM AFTER REPLACING FUSE 38 (10A)	
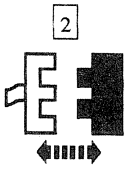	1 Replace fuse 38 (10A).

Official Licensed Product
Ford Motor Company

(Continued)

DIAGNOSIS AND TESTING (Continued)

PINPOINT TEST N: NO MODULE / NETWORK COMMUNICATION (Continued)

TEST CONDITIONS	TEST DETAILS/RESULTS/ACTIONS
N4 CHECK THE SYSTEM AFTER REPLACING FUSE 38 (10A) (Continued)	
	• Is the fuse OK? → **Yes** REINSTALL fuse 38 (10A). TEST the system for normal operation. If the concern persists, GO to **N5**. → **No** REPAIR circuit 1047 (LG/R). TEST the system for normal operation.
N5 CHECK VOLTAGE TO NGS TESTER — CIRCUIT 1047 (LG/R)	
1 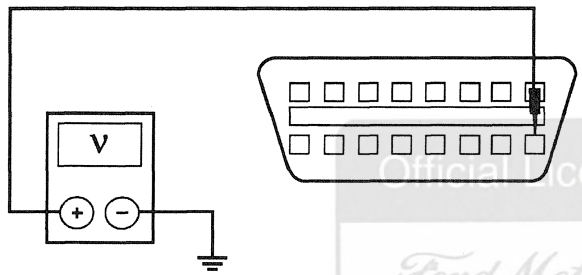 GK5059-A	1 Measure the voltage between data link connector (DLC) C240-16, circuit 1047 (LG/R), and ground. • Is the voltage greater than 10 volts? → **Yes** GO to **N6**. → **No** REPAIR circuit 1047 (LG/R). TEST the system for normal operation.
N6 CHECK THE DATA LINK CONNECTOR (DLC) GROUND — CIRCUIT 57 (BK) AND CIRCUIT 875 (BK/LB)	
1 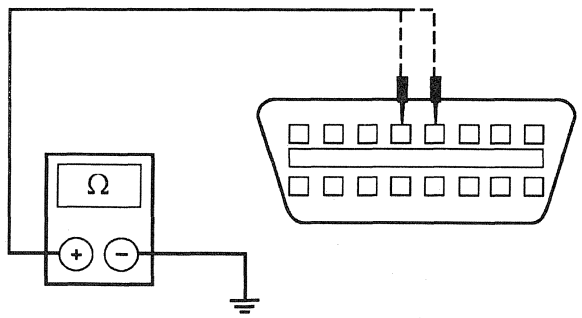 GK5060-A	1 Measure the resistance between DLC C240-4, circuit 57 (BK), C240-5, circuit 875 (BK/LB), and ground. • Is the resistance less than 5 ohms? → **Yes** CHECK NGS Tester. TEST the system for normal operation. → **No** REPAIR circuit 57 (BK) and/or circuit 875 (BK/LB). TEST the system for normal operation.

Official Licensed Product Ford Motor Company

GENERAL PROCEDURES

Communication Circuit Wiring Repair

Special Tool(s)

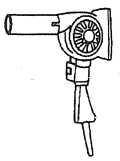 ST1110-A	Heat Gun or equivalent 107-R0300

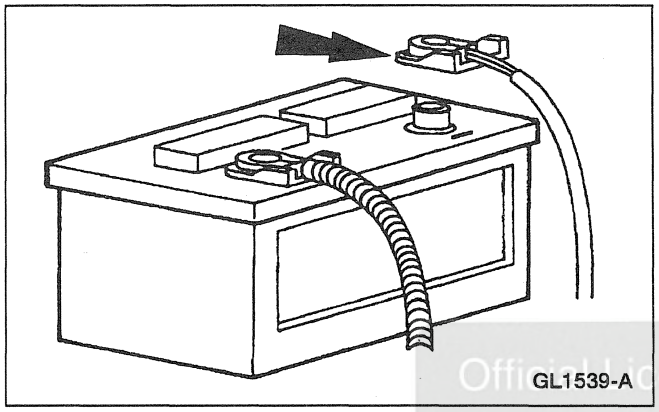

1. Disconnect the battery ground cable.

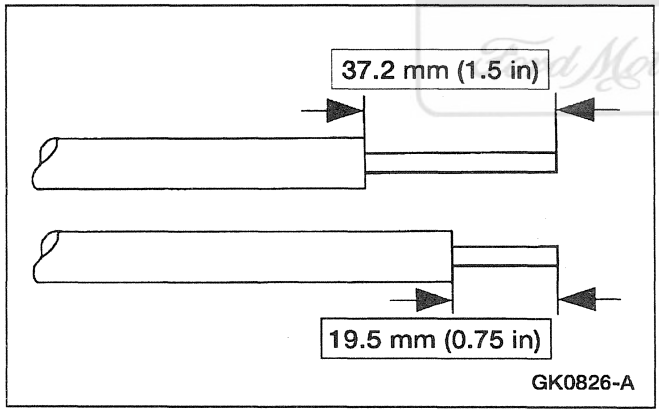

2. Strip the wires.

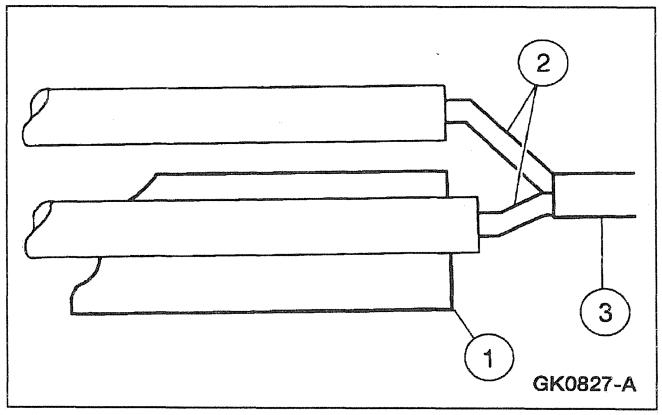

3. **NOTE:** Use adhesive type shrink tubing only.

   NOTE: Use rosin core mildly activated (RMA) solder, not acid core solder.

   Solder the wires.

   1 Install the heat shrink tube.

   2 Twist the wires together.

   3 Solder the wires together.

Official Licensed Product
Ford Motor Company

GENERAL PROCEDURES (Continued)

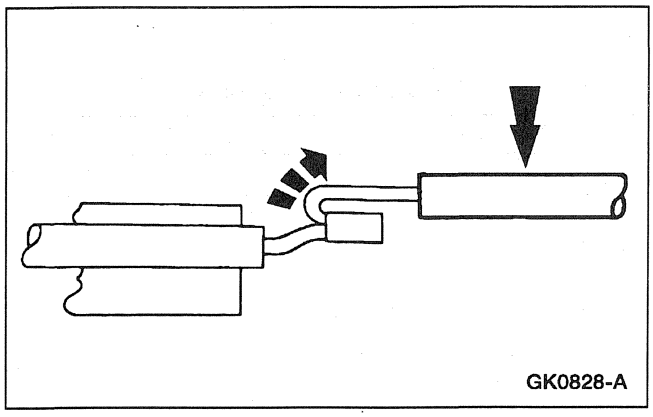
GK0828-A

4. **NOTE:** Wait for the solder to cool before moving the wires.

   Bend the wires back in a straight line.

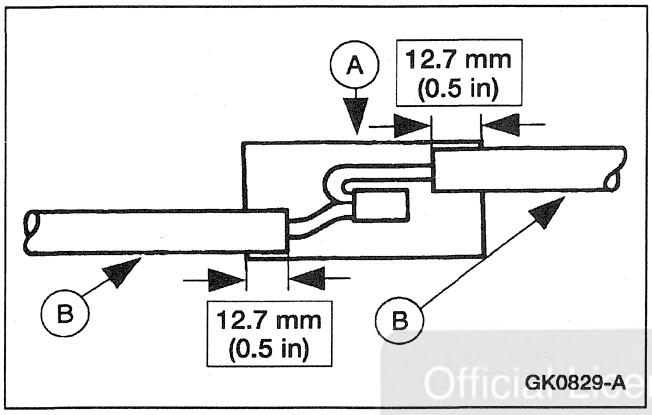

GK0829-A

5. Position the (A) heat shrink tube over the (B) wire repair.
   - Overlap the heat shrink tube on both wires.

Official Licensed Product
Ford Motor Company

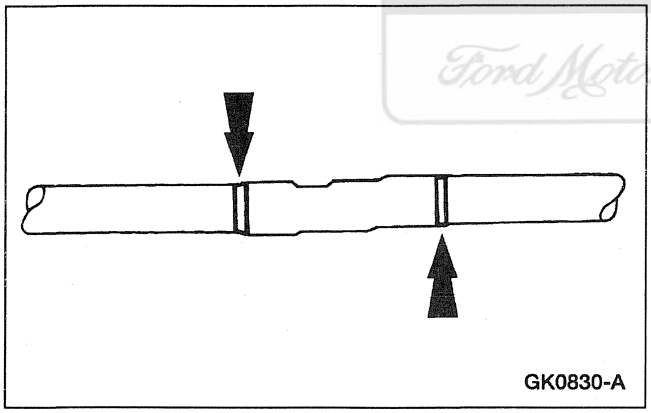
GK0830-A

6. Use Heat Gun to heat the repaired area until adhesive flows out both ends of the heat shrink tube.

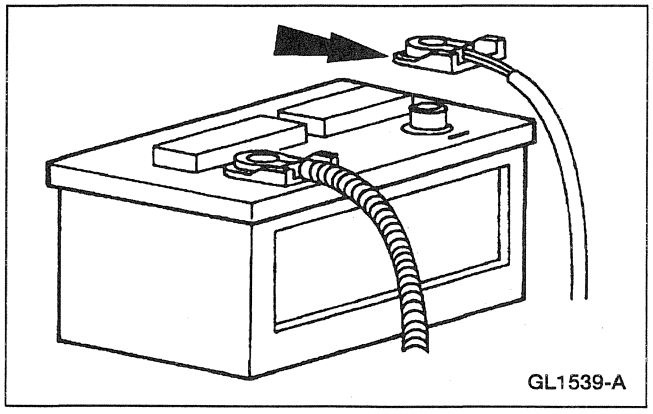
GL1539-A

7. **NOTE:** When the battery is disconnected and reconnected, some abnormal drive symptoms may occur while the vehicle relearns its adaptive strategy. The vehicle may need to be driven 16 km (10 mi) or more to relearn the strategy.

   Connect the battery ground cable.

SPECIFICATIONS

General Specifications

Item	Specification
Heat Shrink Tube Overlap mm (in)	12.7 (0.5)
Wire Insulation Removal Length (Twist Side) mm (in)	37.2 (1.5)
Wire Insulation Removal Length (Receiving Side) mm (in)	19.5 (0.75)

Torque Specifications

Description	Nm	Lb/In
Battery Ground Cable	7-10	62-89

Official Licensed Product
Ford Motor Company

SECTION 419-01A Anti-Theft — Perimeter

VEHICLE APPLICATION: Mark VIII

SUBJECT **PAGE**

DESCRIPTION AND OPERATION
Anti-Theft — Perimeter 419-01A-2
Disarming a Triggered System 419-01A-3
Disarming an Untriggered System 419-01A-3
System Arming 419-01A-3
DIAGNOSIS AND TESTING
Anti-Theft — Perimeter 419-01A-4
Inspection and Verification 419-01A-4
SCIL Module Active Command Index 419-01A-7
SCIL Module Diagnostic Trouble Code (DTC) Index 419-01A-4
SCIL Module Parameter Identification (PID) Index 419-01A-6
Pinpoint Tests 419-01A-9
Symptom Chart 419-01A-8
REMOVAL AND INSTALLATION
Anti-Theft Switch — Door Disarm 419-01A-30
Module — Steering Column Ignition Lighting (SCIL) 419-01A-31

Official Licensed Product
Ford Motor Company

DESCRIPTION AND OPERATION

Anti-Theft — Perimeter

Perimeter Anti-Theft Components

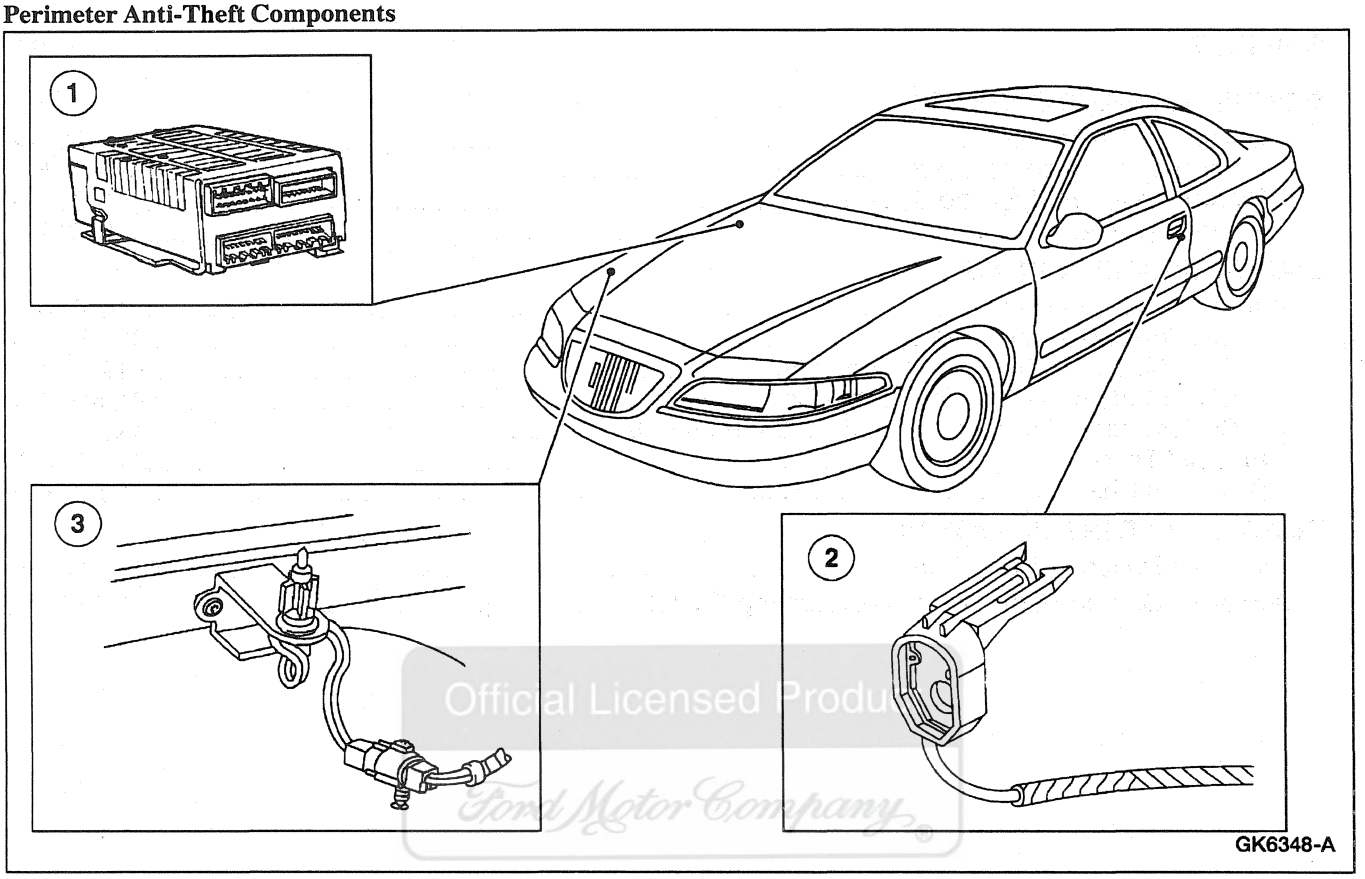

Official Licensed Product
Ford Motor Company

Item	Part Number	Description
1	—	Steering Column Ignition Lighting (SCIL) Control Module
2	—	Door Lock Cylinder Switch
3	19A434	Anti-Theft Control Bracket and Switch

(Continued)

The anti-theft alarm system is managed by the steering column ignition lighting (SCIL) control module.

The anti-theft alarm system provides perimeter (unauthorized vehicle entry) protection.

A violation of the perimeter security (sensed through the door ajar switches and hood ajar switch) will sound the horn (13832) , flash the headlamps, the parking lamps and the courtesy lamps.

The anti-theft alarm system protects the engine compartment through a pin switch (located on the RH front fender apron (16054)).

DESCRIPTION AND OPERATION (Continued)

System Arming

The perimeter security mode is enabled and disabled passively (dedicated to the routine entry and exit steps). The arming mode begins when the ignition switch is turned OFF and a door is opened. This starts the anti-theft indicator lamp on the indicator lamp module flashing and the system begins the arming sequence. The system monitors the door ajar status and the door lock status. The system arms 30 seconds after both doors are locked and closed. This occurs when the doors are locked using either the power lock buttons inside the vehicle, the lock button on the keyless entry remote transmitter (15K601) or the keyless entry keypad (14A626).

The arming sequence will cancel if any door is opened during the 30-second arming sequence, the ignition switch is turned to ACC or RUN, or the doors are unlocked using the door lock cylinder, using a keyless entry code or the keyless entry remote transmitter.

The system can be armed after being disarmed if the doors are closed and the ignition switch is OFF by pressing the keyless entry remote transmitter lock button, or by locking the doors with the keyless entry keypad.

Arming will occur 30 seconds after the arming sequence is started.

Once the system is armed, any violation of the protected areas will set off the alarm. The hood may remain open without the alarm sounding if the hood was open during the entire arming sequence.

Disarming an Untriggered System

The system will be disarmed if:

- the driver or passenger door is unlocked with the key.
- the driver door is unlocked with the keyless entry keypad.
- the driver door is unlocked with the keyless entry remote transmitter.
- the ignition switch is turned to ACC or RUN.

Disarming a Triggered System

NOTE: The system will return to an armed state within three minutes of triggering. The audio and visual alarms will turn off and the system will retrigger if any further violation of the security system occurs.

To disarm a triggered system, perform any of the following operations:

- unlock the driver or passenger door with the key.
- unlock the driver door with the keyless entry keypad code.
- unlock the driver door by pressing the UNLOCK button on the keyless entry remote transmitter.
- turn the ignition switch to RUN with a valid passive anti-theft system (PATS) key.

Official Licensed Product
Ford Motor Company®

DIAGNOSIS AND TESTING

Anti-Theft — Perimeter

Refer to Electrical and Vacuum Troubleshooting Manual, Cell 112, Anti-Theft Protection System for schematic and connector information.

Special Tool(s)

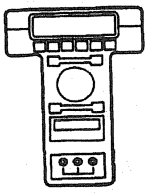 ST1217-A	New Generation STAR (NGS) Tester or equivalent 418-F048 (007-00500)
ST1137-A	73 Digital Multimeter or equivalent 105-R0051

Inspection and Verification

1. Verify the customer's concern by operating the perimeter anti-theft system to duplicate the condition.
2. Visually inspect for obvious signs of mechanical and electrical damage using the following chart:

Visual Inspection Chart

Mechanical	Electrical
• Hood anti-theft control bracket and switch. • Door lock cylinder switch.	• Power distribution box fuse 12 (15A). • Circuitry open/shorted.

3. If the concern remains after the inspection connect the New Generation STAR (NGS) Tester to the data link connector (DLC) located beneath the instrument panel and select the vehicle to be tested from NGS Tester menu. If NGS Tester does not communicate with the vehicle:
   - check that the program card is properly installed.
   - check the connections to the vehicle.
   - check the ignition switch position.
4. If NGS Tester still does not communicate with the vehicle, refer to the New Generation STAR Tester manual.
5. Perform the DATA LINK DIAGNOSTIC TEST. If the NGS responds with:
   - CKT914, CKT915 or CKT70 = ALL ECUS NO RESP/NOT EQUIP, refer to Section 418-00.
   - NO RESP/NOT EQUIP for steering column/ignition/lighting (SCIL) module, go to Pinpoint Test A.
   - SYSTEM PASSED, retrieve and record the continuous diagnostic trouble codes (DTCs), erase the continuous DTCs and perform self-test diagnostics for the SCIL module.
6. If the DTCs retrieved are related to the concern, go to the SCIL Module Diagnostic Trouble Code (DTC) Index to continue diagnostics.
7. If no DTCs related to the concern are retrieved, proceed to Symptom Chart to continue diagnostics.

SCIL Module Diagnostic Trouble Code (DTC) Index

SCIL Module Diagnostic Trouble Code (DTC) Index

DTC	Description	DTC Caused By	Action
C1446	Brake Switch Circuit Failure	SCIL	REFER to Section 206-05.
B1246	Panel Dim Potentiometer Switch Circuit Failure	SCIL	REFER to Section 417-02.
B1312	Lamp Headlamp Input Circuit Short to Battery	SCIL	REFER to Section 417-01.
B1334	Luggage Compartment Door Ajar Circuit Short to Ground	SCIL	REFER to Section 417-02.

(Continued)

Official Licensed Product Ford Motor Company

DIAGNOSIS AND TESTING (Continued)

SCIL Module Diagnostic Trouble Code (DTC) Index

DTC	Description	DTC Caused By	Action
B1342	ECU Defective	SCIL	CLEAR the DTCs. RETRIEVE the DTCs. If DTC B1342 is retrieved, REPLACE the SCIL module; REFER to Section 419-10. TEST the system for normal operation.
B1353	Ignition Key-In Circuit Open	SCIL	GO to Pinpoint Test C.
B1360	Ignition RUN/ACC Circuit Open	SCIL	REFER to Section 211-05.
B1364	Ignition Start Circuit Open	SCIL	REFER to Section 211-05.
B1446	Wiper Park Sense Circuit Failure	SCIL	REFER to Section 417-01.
B1485	Brake Pedal Input Short to Battery	SCIL	REFER to Section 417-01.
B1509	Flash-to-Pass Switch Circuit Short to Battery	SCIL	REFER to Section 417-01.
B1522	Hood Switch Circuit Short to Ground	SCIL	GO to Pinpoint Test G.
B1562	Door Lock Cylinder Circuit Short to Ground	SCIL	GO to Pinpoint Test F.
B1566	Door Ajar Circuit Short to Ground	SCIL	REFER to Section 417-02.
B1600	PATS Ignition Key Transponder Signal Is Not Received	SCIL	REFER to Section 419-01B.
B1601	PATS Received Incorrect Key Code From Ignition Key Transponder	SCIL	REFER to Section 419-01B.
B1676	Battery Voltage Out of Range	SCIL	REFER to Section 414-00.
B1682	PATS Is Disabled (Check Link Between PATS and Transponder)	SCIL	REFER to Section 419-01B.
B1687	Dome Lamp Input Circuit Short to Battery	SCIL	REFER to Section 417-02.
B1689	Autolamp Delay Circuit Failure	SCIL	REFER to Section 417-01.
B1796	Lamp Headlamp Low Beam Circuit Short to Battery	SCIL	REFER to Section 417-01.
B1875	Turn Signal/Hazard Switch Signal Circuit Failure	SCIL	REFER to Section 417-01.
B1980	Bulb Outage Condition Detected	SCIL	REFER to Section 417-01.
B2328	Steering Column Reach Feedback Potentiometer Circuit Failure	SCIL	REFER to Section 211-05.
B2332	Steering Column Tilt Feedback Potentiometer Circuit Failure	SCIL	REFER to Section 211-05.
B2351	Steering Column Switch Signal Circuit Failure	SCIL	REFER to Section 211-05.
U1027	SCP Invalid or Missing Data for Engine RPM	PCM	PERFORM the PCM Self-Test.
U1041	SCP Invalid or Missing Data for Vehicle Speed	ABS	PERFORM the ABS Self-Test.
U1057	SCP Invalid or Missing Data for Vehicle Configuration	SCIL	PERFORM the SCIL Self-Test.
U1059	SCP Invalid or Missing Data for Transmission/Transaxle/PRNDL	PCM	PERFORM the PCM Self-Test.
U1123	SCP Invalid or Missing Data for Odometer	ABS	PERFORM the ABS Self-Test.
U1147	SCP Invalid or Missing Data for Vehicle Security	PCM	PERFORM the PCM Self-Test.

(Continued)

DIAGNOSIS AND TESTING (Continued)

SCIL Module Diagnostic Trouble Code (DTC) Index

DTC	Description	DTC Caused By	Action
U1180	SCP Invalid or Missing Data for Personalization (Memory) Features	DDM	PERFORM the DDM Self-Test.
U1181	SCP Invalid or Missing Data for Personalization (Memory) Features	DDM	PERFORM the DDM Self-Test.
U1197	SCP Invalid or Missing Data for Door Locks	DDM	PERFORM the DDM Self-Test.
U1198	SCP Invalid or Missing Data for External Access (Doors)	DDM	PERFORM the DDM Self-Test.
U1199	SCP Invalid or Missing Data for External Access (Doors)	DDM	PERFORM the DDM Self-Test.
U1211	SCP Invalid or Missing Data for Restraints	DSM	PERFORM the DSM Self-Test.
U1222	SCP Invalid or Missing Data for Interior Lamps	DDM	PERFORM the DDM Self-Test.

SCIL Module Parameter Identification (PID) Index

SCIL Module Parameter Identification (PID) Index

Display	Description	Expected Values
CCNTSCI	Number of Continuous DTCs on SCIL	one count per bit
BOO__SCI	Brake Switch Input	ON, OFF
PARK__BRK	Parking Brake Switch Input	ON, OFF
TILT	Steering Column Tilt Switch	SHORT, UP, DOWN, OFF
TELESCP	Steering Column Telescope Switch	SHORT, IN, OUT, OFF
TILTPOS	Tilt Position Sensor	SENSED, notSEN
TELEPOS	Telescope Position Sensor	SENSED, notSEN
TURN__SW	Left and Right Turn Signal Switch	OFF, LEFT, RIGHT, SHORT
LBEAMSW	Low Beam Switch	ON, OFF
HBEAMSW	High Beam Switch	ON, OFF
PARK__SW	Parking Switch	ON, OFF
LIGHTSN	Ambient Light	DAY, NIGHT
FLASH	Flash to Pass Switch	ON, OFF
FTURN__L	Left and Right Front Turn Lamp	R__OPEN, L__OPEN, L/R__OPEN OK
RTURN__L	Left and Right Rear Turn Lamp	R__OPEN, L__OPEN, L/R__OPEN OK
TAILLMP	Left and Right Tail Lamp	OPEN, OK
LOWBEAM	Low Beam Lamp	R__OPEN, L__OPEN, L/R__OPEN OK
AUTOLMP	Autolamp Switch	ON, OFF
ALP__IMP	Autolamp Analog Input	0-100%
DOMESW	Dome Lamp Switch	ACTIVE, notACT
PANLDIM	Panel Dim Intensity Switch	0-100%
HOOD__SW	Hood Ajar Switch	AJAR, CLOSED
DECKLID	Deck Lid Ajar Switch	AJAR, CLOSED
P__DR__SW	Passenger Door Ajar Switch	AJAR, CLOSED
IGN__KEY	Ignition Key In/Out	IN, OUT
IGN__SCI	Ignition Switch	START, RUN, OFF, ACCY

(Continued)

Official Licensed Product

DIAGNOSIS AND TESTING (Continued)

SCIL Module Parameter Identification (PID) Index

Display	Description	Expected Values
WPPRKSW	Windshield Wiper Park Sense	notPRK, PARKED
NUMKEYS	Number of Ignition Key Codes Supported	BCD (valid range 0-8)
DRLKCYL	Door Lock Cylinder	ON, OFF
ENABLE	PATS System Status	ON, OFF

SCIL Module Active Command Index

SCIL Module Active Command Index

Active Command	Display	Action
PID LATCH	PID LATCH	ON, OFF
ONE TOUCH WINDOW DWN & ACCY DELAY	ACCY RLY	ON, OFF
WARNING LAMPS AND CHIME	CHIME	ON, OFF
WARNING LAMPS AND CHIME	ANTI-THEFT	ON, OFF
WARNING LAMPS AND CHIME	AUTOLMP	ON, OFF
WARNING LAMPS AND CHIME	HIGH BEAM	ON, OFF
INTERIOR COURTESY LAMPS	INT LAMPS	ON, OFF
INTERIOR COURTESY LAMPS	MIRRORLMP	ON, OFF
DECKLID RELEASE	RELEASE	ON, OFF
TURN SIGNAL AND MARKER LAMPS	LF TURN	ON, OFF
TURN SIGNAL AND MARKER LAMPS	RF TURN	ON, OFF
TURN SIGNAL AND MARKER LAMPS	LR TURN	ON, OFF
TURN SIGNAL AND MARKER LAMPS	RR TURN	ON, OFF
TURN SIGNAL AND MARKER LAMPS	PARKLAMPS	ON, OFF
HEADLAMP CONTROL	LEFT LOW	ON, OFF
HEADLAMP CONTROL	RIGHT LOW	ON, OFF
HEADLAMP CONTROl	HIGH BEAM	ON, OFF
HEADLAMP CONTROL	DRUN LAMP	ON, OFF
HEADLAMP CONTROL	LF CORNER	ON, OFF
HEADLAMP CONTROL	RF CORNER	ON, OFF
HORN CONTROL	HORN	ON, OFF
BACKLIGHTING INTENSITY	INTENSITY	0%-100%
COURTESY LAMP INTENSITY	INTENSITY	0%-100%
DOOR AJAR SIGNAL	DOOR AJAR	ON, OFF
TRANSMIT SIGNAL COMMAND	TRANSMIT	ON, OFF
BRAKE SYSTEM	BRK/SHIFT	ON, OFF
BRAKE SYSTEM	PARK BRK	ON, OFF
STEERING COLUMN CONTROL	TILT UP	ONE SECOND TIME OUT
STEERING COLUMN CONTROL	TILT DOWN	ONE SECOND TIME OUT
STEERING COLUMN CONTROL	TELSCP IN	ONE SECOND TIME OUT
STEERING COLUMN CONTROL	TELSCPOUT	ONE SECOND TIME OUT
KEYCODE ERASE TIME SET	MINUTES	8-63 MINUTES

Official Licensed Product

DIAGNOSIS AND TESTING (Continued)

Symptom Chart

Symptom Chart

Condition	Possible Source	Action
• No Communication With The Module — Steering Column/Ignition/Lighting Module	• SCIL module. • Circuitry.	• GO to Pinpoint Test A.
• The Anti-Theft Indicator Is Always On	• Circuitry. • SCIL module. • Warning indicator lamp assembly.	• GO to Pinpoint Test B.
• The Anti-Theft Indicator Is Never On	• SCIL module. • Circuitry. • Bulb. • Warning indicator lamp assembly.	• GO to Pinpoint Test C.
• The Alarm System Does Not Arm/Disarm — Using Keyless Entry Remote Transmitter or Keyless Entry Keypad	• SCIL module. • Driver door module. • Keyless entry keypad. • Remote transmitter.	• GO to Pinpoint Test D.
• The Alarm System Does Not Arm — Using Door Lock Switch	• Door lock switch. • SCIL module. • Circuitry.	• GO to Pinpoint Test E.
• The Alarm System Does Not Disarm Using Door Lock Switch	• Door lock switch. • SCIL module. • Circuitry.	• GO to Pinpoint Test F.
• The Alarm System Does Not Operate Properly	• Circuitry. • Hood switch. • SCIL module. • Horn relay.	• GO to Pinpoint Test G.

Ford Motor Company

DIAGNOSIS AND TESTING (Continued)

Pinpoint Tests

⚠ CAUTION: Be careful when probing the fuse junction panel, power distribution box or any connectors. Damage will result to the connector receptacle if the probe or terminal being used is too large.

⚠ CAUTION: Electronic modules are sensitive to electrical charges. If exposed to these charges, damage may result.

PINPOINT TEST A: NO COMMUNICATION WITH THE MODULE — STEERING COLUMN/IGNITION/LIGHTING MODULE

TEST CONDITIONS	TEST DETAILS/RESULTS/ACTIONS
A1 CHECK CIRCUIT 875 (BK/LB) FOR AN OPEN	
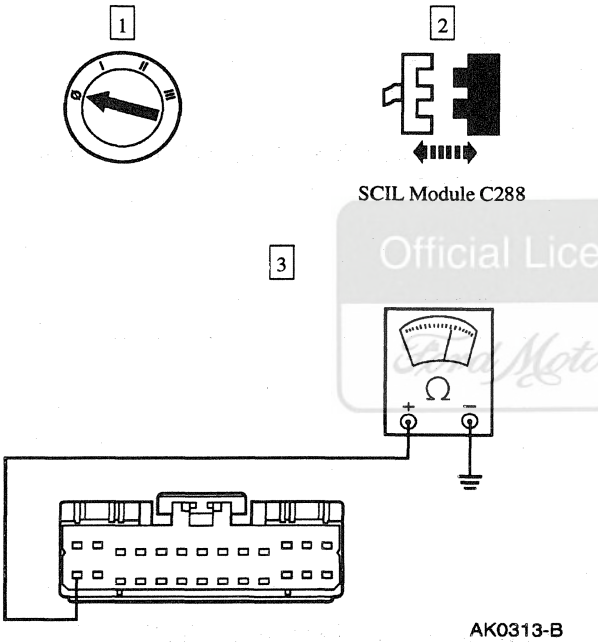	3 Measure the resistance between SCIL module C288-14, circuit 875 (BK/LB), and ground. • Is the resistance less than 5 ohms? → **Yes** GO to **A2.** → **No** REPAIR circuit 875 (BK/LB). TEST the system for normal operation.

Official Licensed Product Ford Motor Company®

(Continued)

DIAGNOSIS AND TESTING (Continued)

PINPOINT TEST A: NO COMMUNICATION WITH THE MODULE — STEERING COLUMN/IGNITION/LIGHTING MODULE (Continued)

TEST CONDITIONS	TEST DETAILS/RESULTS/ACTIONS
A2 CHECK CIRCUIT 57 (BK) FOR AN OPEN	
1 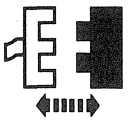 SCIL Module C287 2 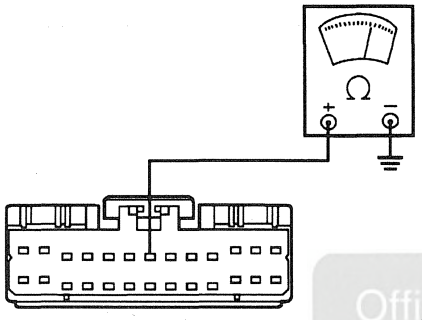 AK0314-B	2 Measure the resistance between SCIL module C287-7, circuit 57 (BK), and ground. • Is the resistance less than 5 ohms? → **Yes** GO to **A3**. → **No** REPAIR circuit 57 (BK). TEST the system for normal operation.
A3 CHECK FOR VOLTAGE TO THE SCIL MODULE	
1 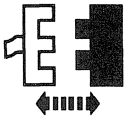 SCIL Module C289 2 3 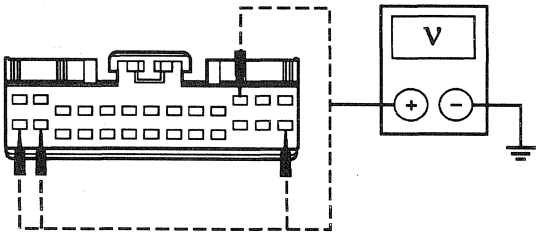 GK4906-A	3 Measure the voltage between the SCIL module C287 and ground; refer to the following chart: **SCIL Module Connector Pin** / **Circuit** C287-14 — 906 (R/O) C287-26 — 19 (LB/R) C287-15 — 1055 (W/LG) C287-11 — 1056 (DB/LG)

Official Licensed Product
Ford Motor Company

(Continued)

DIAGNOSIS AND TESTING (Continued)

PINPOINT TEST A: NO COMMUNICATION WITH THE MODULE — STEERING COLUMN/IGNITION/LIGHTING MODULE (Continued)

TEST CONDITIONS	TEST DETAILS/RESULTS/ACTIONS
A3 CHECK FOR VOLTAGE TO THE SCIL MODULE (Continued)	
4 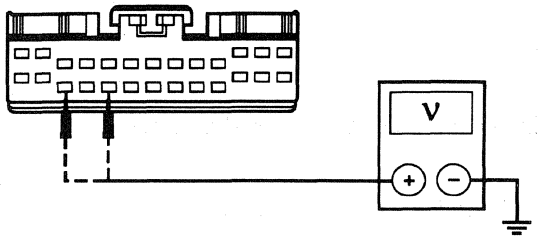 GK4907-A	4 Measure the voltage between the SCIL module C288 and ground; refer to the following chart: **SCIL Module Connector Pin** / **Circuit** C288-16 — 251 (BR/O) C288-18 — 158 (BK/PK)
5 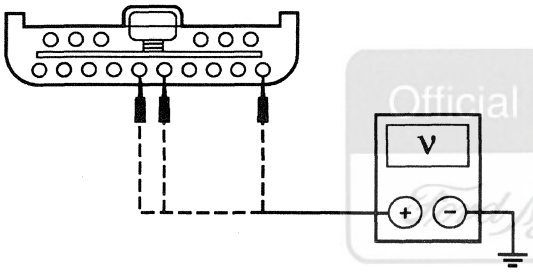 GK4908-A	5 Measure the voltage between the SCIL module C289 and ground; refer to the following chart: **SCIL Module Connector Pin** / **Circuit** C289-5 — 1058 (BR/W) C289-6 — 1057 (O/BK) C289-1 — 1046 (T) • Are all the voltages greater than 10 volts? → **Yes** REFER to Section 418-00. → **No** REPAIR the circuit in question. TEST the system for normal operation..

Official Licensed Product Ford Motor Company

DIAGNOSIS AND TESTING (Continued)

PINPOINT TEST B: THE ANTI-THEFT INDICATOR IS ALWAYS ON

TEST CONDITIONS	TEST DETAILS/RESULTS/ACTIONS
B1 CHECK THE SCIL MODULE	
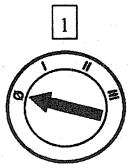 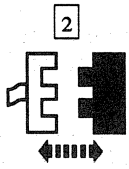 SCIL Module C287	• Is the anti-theft indicator illuminated? → **Yes** GO to **B2.** → **No** REPLACE the SCIL module; REFER to Section 419-10. TEST the system for normal operation.
B2 CHECK CIRCUIT 343 (DB/LG) FOR A SHORT TO POWER	
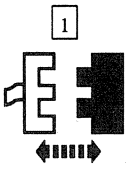 Warning Indicator Lamp Assembly C238 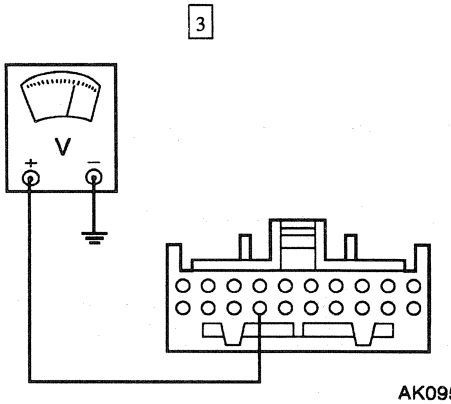 AK0950-B	3 Measure the voltage between warning indicator lamp assembly C238-17, circuit 343 (DB/LG), and ground. • Is any voltage present? → **Yes** REPAIR circuit 343 (DB/LG). TEST the system for normal operation. → **No** REPLACE the warning indicator lamp assembly; REFER to Section 413-08. TEST the system for normal operation.

Original Licensed Product
Ford Motor Company

DIAGNOSIS AND TESTING (Continued)

THE ANTI-THEFT INDICATOR IS NEVER ON

TEST CONDITIONS	TEST DETAILS/RESULTS/ACTIONS
C1 CHECK SCIL MODULE OUTPUT FOR VOLTAGE — CIRCUIT 343 (DB/LG)	
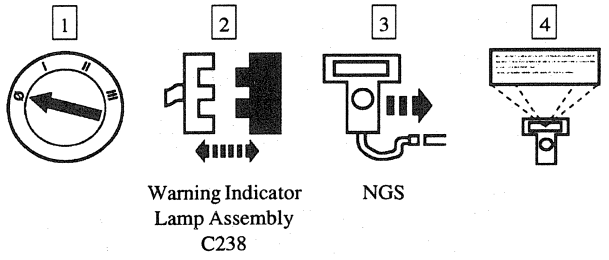 Warning Indicator Lamp Assembly C238 — NGS	4 Trigger the SCIL active command WARNING LAMPS AND CHIME ON.
5 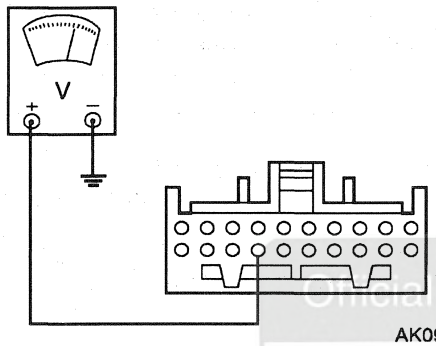 AK0950-B	5 Measure the voltage between warning indicator lamp assembly C238-17, circuit 343 (DB/LG), and ground. • Is the voltage greater than 10 volts? → **Yes** GO to **C4**. → **No** GO to **C2**.
C2 CHECK CIRCUIT 343 (DB/LG) FOR SHORT TO GROUND	
1 2 SCIL Module C287	
3 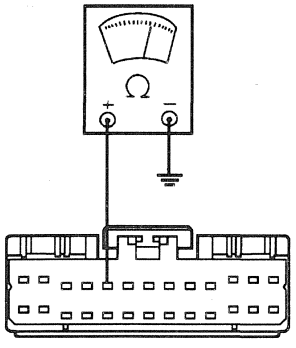 AK0946-B	3 Measure the resistance between SCIL module C287-5, circuit 343 (DB/LG), and ground. • Is the resistance greater than 10,000 ohms? → **Yes** GO to **C3**. → **No** REPAIR circuit 343 (DB/LG). TEST the system for normal operation.

Official Licensed Product

(Continued)

DIAGNOSIS AND TESTING (Continued)

THE ANTI-THEFT INDICATOR IS NEVER ON (Continued)

TEST CONDITIONS	TEST DETAILS/RESULTS/ACTIONS
C3 CHECK CIRCUIT 343 (DB/LG) FOR OPEN	
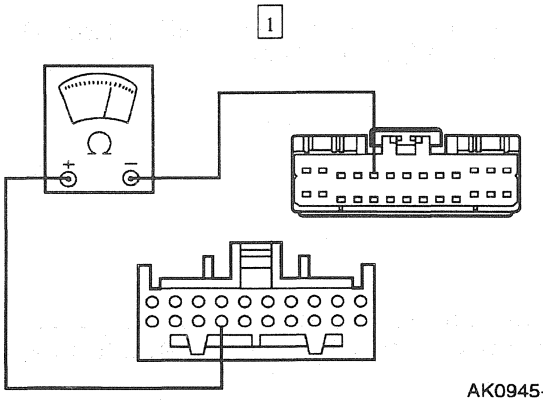 AK0945-B	1 Measure the resistance between SCIL module C287-5, circuit 343 (DB/LG), and indicator lamp module C238-17, circuit 343 (DB/LG). • Is the resistance less than 5 ohms? → **Yes** REPLACE the SCIL module; REFER to Section 419-10. TEST the system for normal operation. → **No** REPAIR circuit 343 (DB/LG). TEST the system for normal operation.
C4 CHECK CIRCUIT 57 (BK) FOR OPEN	
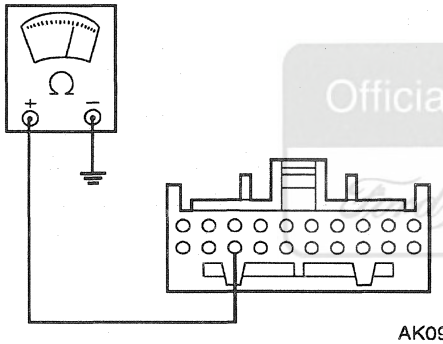 AK0948-B	1 Measure the resistance between warning indicator lamp assembly C238-18, circuit 57 (BK), and ground. • Is the resistance less than 5 ohms? → **Yes** REPLACE the indicator lamp module; REFER to Section 413-08. TEST the system for normal operation. → **No** REPAIR circuit 57 (BK). TEST the system for normal operation.

Official Licensed Product Ford Motor Company

PINPOINT TEST D: THE ALARM SYSTEM DOES NOT ARM/DISARM — USING KEYLESS ENTRY REMOTE TRANSMITTER OR KEYLESS ENTRY KEYPAD

TEST CONDITIONS	TEST DETAILS/RESULTS/ACTIONS
D1 CHECK THE COURTESY LAMP OPERATION	
	1 Verify the doors are locked.

(Continued)

DIAGNOSIS AND TESTING (Continued)

PINPOINT TEST D: THE ALARM SYSTEM DOES NOT ARM/DISARM — USING KEYLESS ENTRY REMOTE TRANSMITTER OR KEYLESS ENTRY KEYPAD (Continued)

TEST CONDITIONS	TEST DETAILS/RESULTS/ACTIONS
D1 CHECK THE COURTESY LAMP OPERATION (Continued)	
2 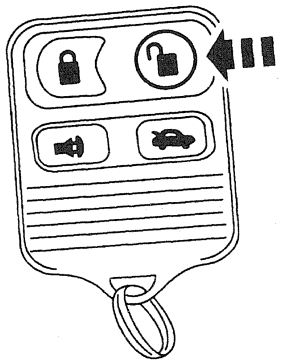 GN1720-A	2 Press the unlock button on the keyless entry remote transmitter. • Do the courtesy lamps illuminate? → **Yes** GO to **D2**. → **No** REFER to Section 417-02.
D2 RETRIEVE THE DTCS	
1 2 3 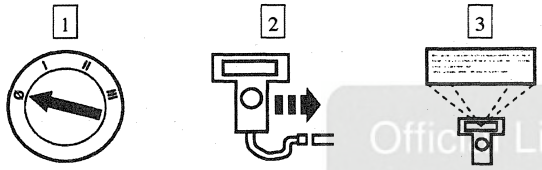 NGS SCIL On Demand Self-Test	• Is DTC U1197, U1199 or U1222 retrieved? → **Yes** REFER to Diagnostic Trouble Code (DTC) Index in this section. → **No** GO to **D3**.
D3 CHECK THE KEYPAD AND KEYLESS ENTRY TRANSMITTER FOR DOOR LOCK OPERATION	
	1 Lock and unlock the door locks using the keyless entry remote transmitter and the keyless entry keypad. • Do the door locks operate properly? → **Yes** GO to **D4**. → **No** REFER to Section 501-14B.

Official Licensed Product Ford Motor Company

(Continued)

DIAGNOSIS AND TESTING (Continued)

PINPOINT TEST D: THE ALARM SYSTEM DOES NOT ARM/DISARM — USING KEYLESS ENTRY REMOTE TRANSMITTER OR KEYLESS ENTRY KEYPAD (Continued)

TEST CONDITIONS	TEST DETAILS/RESULTS/ACTIONS
D4 CHECK THE KEYLESS ENTRY REMOTE TRANSMITTER FOR ANTI-THEFT OPERATION	
1 	
	2 Verify the doors are closed.
3 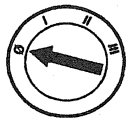	
	4 Open, then close, the driver door.
	5 Press the LOCK button on the keyless entry remote transmitter. • Does the THEFT indicator illuminate for 30 seconds then turn off? → **Yes** GO to **D5**. → **No** REPLACE the driver door module; REFER to Section 419-10. TEST the system for normal operation. If the anti-theft system is still inoperative, REPLACE the SCIL module; REFER to Section 419-10. TEST the system for normal operation.
D5 CHECK THE KEYLESS ENTRY KEYPAD FOR ANTI-THEFT OPERATION	
1 	
	2 Verify the doors are closed.

(Continued)

Official Licensed Product
Ford Motor Company

DIAGNOSIS AND TESTING (Continued)

PINPOINT TEST D: THE ALARM SYSTEM DOES NOT ARM/DISARM — USING KEYLESS ENTRY REMOTE TRANSMITTER OR KEYLESS ENTRY KEYPAD (Continued)

TEST CONDITIONS	TEST DETAILS/RESULTS/ACTIONS
D5 CHECK THE KEYLESS ENTRY KEYPAD FOR ANTI-THEFT OPERATION (Continued)	
3 	4 Open, then close, the driver door. 5 Lock the doors using the keyless entry keypad. • Does the anti-theft indicator lamp flash for 30 seconds then turn off? → **Yes** The anti-theft system is operating properly. CLARIFY the concern with the customer. → **No** REPLACE the driver door module; REFER to Section 419-10. TEST the system for normal operation. If the anti-theft system is still inoperative, REPLACE the SCIL module; REFER to Section 419-10. TEST the system for normal operation.

Official Licensed Product
Ford Motor Company

PINPOINT TEST E: THE ALARM SYSTEM DOES NOT ARM — USING DOOR LOCK SWITCH

TEST CONDITIONS	TEST DETAILS/RESULTS/ACTIONS
E1 CHECK THE COURTESY LAMP OPERATION	
2 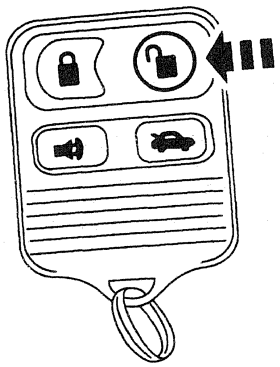 GN1720-A	1 Verify the doors are locked. 2 Press the unlock button on the keyless entry remote transmitter. • Do the courtesy lamps illuminate? → **Yes** GO to **E2**. → **No** REFER to Section 417-02.

(Continued)

DIAGNOSIS AND TESTING (Continued)

PINPOINT TEST E: THE ALARM SYSTEM DOES NOT ARM — USING DOOR LOCK SWITCH (Continued)

TEST CONDITIONS	TEST DETAILS/RESULTS/ACTIONS
E2 CHECK THE DOOR LOCK SWITCH FOR NORMAL OPERATION	
	1 Lock and unlock the doors by operating the driver door lock switch. • Do the doors lock and unlock? → **Yes** GO to **E3**. → **No** REFER to Section 501-14A.
E3 CHECK THE DOOR LOCK SWITCH FOR ANTI-THEFT OPERATION	
2 3	1 Verify the doors are closed. 4 Open the driver door. 5 Press the lock button on the left door lock switch. 6 Close the driver door. • Does the anti-theft indicator flash for 30 seconds then turn off? → **Yes** The anti-theft system is operating properly. CLARIFY the concern with the customer. → **No** REPLACE the driver door module; REFER to Section 419-10. TEST the system for normal operation. If the anti-theft system is still inoperative, REPLACE the SCIL module; REFER to Section 419-10. TEST the system for normal operation.

Official Licensed Product
Ford Motor Company

DIAGNOSIS AND TESTING (Continued)

PINPOINT TEST F: THE ALARM SYSTEM DOES NOT DISARM — USING DOOR LOCK SWITCH

TEST CONDITIONS	TEST DETAILS/RESULTS/ACTIONS
F1 RETRIEVE THE DTCS	
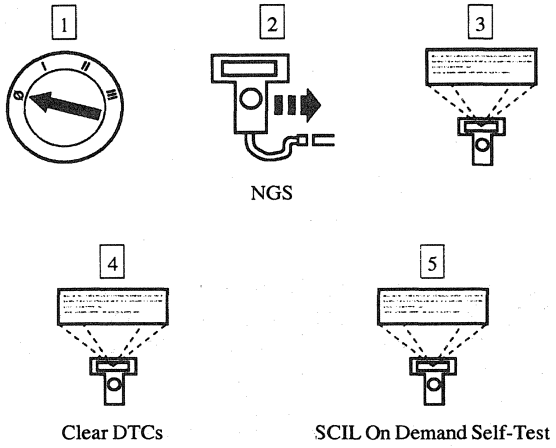	3 Retrieve and document continuous DTCs • Is DTC B1562 retrieved? → **Yes** GO to **F10**. → **No** GO to **F2**.
F2 MONITOR THE SCIL PID DRLKCYL — DRIVER DOOR	
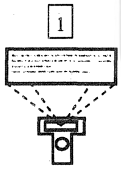	1 Rotate the driver door lock switch to the unlock position while monitoring the SCIL PID DRLKCYL. • Does the SCIL PID DRLKCYL indicate ON in the unlocked position? → **Yes** GO to **F7**. → **No** GO to **F3**.
F3 MONITOR THE SCIL PID DRLKCYL — PASSENGER DOOR	
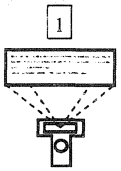	1 Rotate the passenger door lock switch to the unlock position while monitoring the SCIL PID DRLKCYL. • Does the SCIL PID DRLKCYL indicate ON in the unlock position? → **Yes** GO to **F5**. → **No** GO to **F4**.

(Continued)

Official Licensed Publication
Ford Motor Company

DIAGNOSIS AND TESTING (Continued)

PINPOINT TEST F: THE ALARM SYSTEM DOES NOT DISARM — USING DOOR LOCK SWITCH (Continued)

TEST CONDITIONS	TEST DETAILS/RESULTS/ACTIONS
F4 CHECK CIRCUIT 25 (DG/P) FOR OPEN	
1 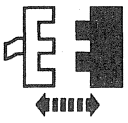 SCIL Module C286 2 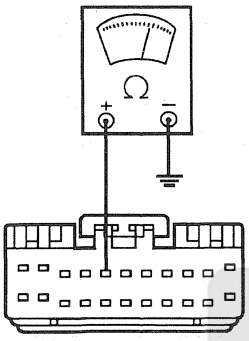 AK0944-B	2 Measure the resistance between SCIL module C286-5, circuit 25 (DG/P), and ground while turning the driver door lock switch to the unlock position. • Is the resistance less than 5 ohms? → **Yes** REPLACE the SCIL module; REFER to Section 419-10. TEST the system for normal operation. → **No** REPAIR circuit 25 (DG/P). TEST the system for normal operation.
F5 CHECK CIRCUIT 875 (BK/LB) FOR OPEN	
1 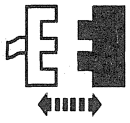 Driver Door Lock Disarm Switch C504 2 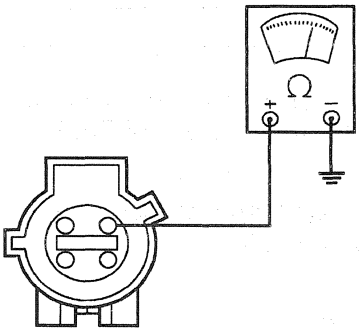 AK0947-A	2 Measure the resistance between the driver door disarm switch C504, circuit 875 (BK/LB), and ground. • Is the resistance less than 5 ohms? → **Yes** GO to **F6**. → **No** REPAIR circuit 875 (BK/LB). TEST the system for normal operation.

(Continued)

Official Licensed Product Ford Motor Company

DIAGNOSIS AND TESTING (Continued)

PINPOINT TEST F: THE ALARM SYSTEM DOES NOT DISARM — USING DOOR LOCK SWITCH (Continued)

TEST CONDITIONS	TEST DETAILS/RESULTS/ACTIONS
F6 CHECK THE DRIVER DOOR LOCK CYLINDER SWITCH	
1 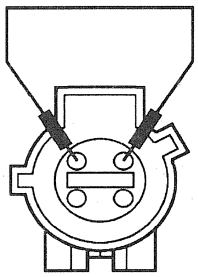 AK0949-A 2 	1 Connect a jumper between driver door disarm switch C504, circuit 25 (DG/P), and circuit 875 (BK/LB). 2 Monitor the SCIL PID DRLKCYL. • Does SCIL PID DRLKCYL indicate ON? → **Yes** REPLACE the driver door disarm switch. TEST the system for normal operation. → **No** REPAIR circuit 25 (DG/P). TEST the system for normal operation.
F7 MONITOR THE SCIL PID DRLKCYL — PASSENGER DOOR	
1 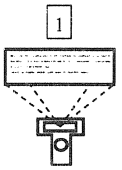	1 Rotate the passenger door lock switch to the unlock position while monitoring the SCIL PID DRLKCYL. • Does the SCIL PID DRLKCYL indicate ON in the unlock position? → **Yes** REPLACE the SCIL module; REFER to Section 419-10. TEST the system for normal operation. → **No** GO to **F8**.

(Continued)

Official Licensed Product
Ford Motor Company

DIAGNOSIS AND TESTING (Continued)

PINPOINT TEST F: THE ALARM SYSTEM DOES NOT DISARM — USING DOOR LOCK SWITCH (Continued)

TEST CONDITIONS	TEST DETAILS/RESULTS/ACTIONS
F8 CHECK CIRCUIT 875 (BK/LB) FOR OPEN	
1 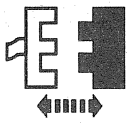 Passenger Door Disarm Switch C604 2 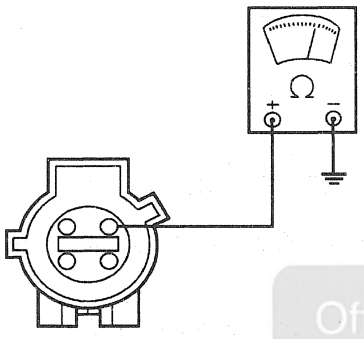 AK0947-A	2 Measure the resistance between passenger door disarm switch C604, circuit 875 (BK/LB), and ground. • Is the resistance less than 5 ohms? → **Yes** GO to **F9**. → **No** REPAIR circuit 875 (BK/LB). TEST the system for normal operation.
F9 CHECK THE PASSENGER DOOR LOCK CYLINDER SWITCH	
1 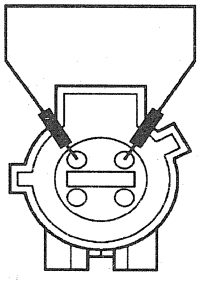 AK0949-A 2 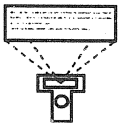	1 Connect a jumper between passenger door disarm switch C604, circuit 25 (DG/P), and circuit 875 (BK/LB). 2 Monitor the SCIL PID DRLKCYL. • Does the SCIL PID DRLKCYL indicate ON? → **Yes** REPLACE the passenger door disarm switch. TEST the system for normal operation. → **No** REPAIR circuit 25 (DG/P). TEST the system for normal operation.

Official Licensed Product Ford Motor Company

(Continued)

DIAGNOSIS AND TESTING (Continued)

PINPOINT TEST F: THE ALARM SYSTEM DOES NOT DISARM — USING DOOR LOCK SWITCH (Continued)

TEST CONDITIONS	TEST DETAILS/RESULTS/ACTIONS
F10 MONITOR THE PID DRLKCYL — DRIVER DOOR	
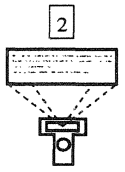	1 Insert the key in the driver door lock cylinder. 2 Rotate the key to lock, unlock, and neutral position while monitoring SCIL PID DRLKCYL. • Does the SCIL PID DRLKCYL indicate ON in the unlock position and OFF in the lock and neutral positions? → **Yes** REPAIR the driver door lock cylinder. TEST the system for normal operation. → **No** GO to **F11**.
F11 MONITOR THE PID DRLKCYL — PASSENGER DOOR	
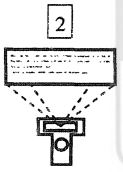	1 Insert the key in the passenger door lock cylinder. 2 Rotate the key to lock, unlock, and neutral position while monitoring SCIL PID DRLKCYL. • Does the SCIL PID DRLKCYL read ON in the unlock position and OFF in the lock and neutral positions? → **Yes** REPAIR the passenger door lock cylinder. TEST the system for normal operation. → **No** GO to **F12**.
F12 CHECK THE DRIVER DOOR DISARM SWITCH — MONITOR THE SCIL PID DRLKCYL	
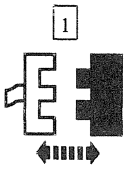 Driver Door Disarm Switch C504 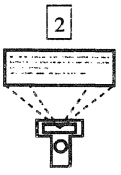	2 Monitor the SCIL PID DRLKCYL. • Does the SCIL PID DRLKCYL indicate OFF? → **Yes** REPLACE the driver door disarm switch. TEST the system for normal operation. → **No** GO to **F13**.

(Continued)

Official Licensed Product Ford Motor Company

DIAGNOSIS AND TESTING (Continued)

PINPOINT TEST F: THE ALARM SYSTEM DOES NOT DISARM — USING DOOR LOCK SWITCH (Continued)

TEST CONDITIONS	TEST DETAILS/RESULTS/ACTIONS
F13 CHECK THE PASSENGER DOOR DISARM SWITCH — MONITOR THE SCIL PID DRLKCYL	
Passenger Door Disarm Switch C604	2 Monitor the SCIL PID DRLKCYL. • Does the SCIL PID DRLKCYL indicate OFF? → **Yes** REPLACE the passenger door disarm switch. TEST the system for normal operation. → **No** GO to **F14**.
F14 CHECK CIRCUIT 25 (DG/P) FOR SHORT TO GROUND — MONITOR THE SCIL PID DRLKCYL	
SCIL Module C286	2 Monitor the SCIL PID DRLKCYL. • Does the SCIL PID DRLKCYL indicate OFF? → **Yes** REPAIR circuit 25 (DG/P). TEST the system for normal operation. → **No** REPLACE the SCIL module; REFER to Section 419-10. TEST the system for normal operation.

Official Licensed Product
Ford Motor Company

PINPOINT TEST G: THE ALARM SYSTEM DOES NOT OPERATE PROPERLY

TEST CONDITIONS	TEST DETAILS/RESULTS/ACTIONS
G1 CHECK THE ALARM SYSTEM FOR PROPER OPERATION	
	1 Verify both windows are down. 2 Arm the system; refer to System Arming. 3 Trigger the alarm by opening the driver and passenger doors from the inside.

(Continued)

DIAGNOSIS AND TESTING (Continued)

PINPOINT TEST G: THE ALARM SYSTEM DOES NOT OPERATE PROPERLY (Continued)

TEST CONDITIONS	TEST DETAILS/RESULTS/ACTIONS
G1 CHECK THE ALARM SYSTEM FOR PROPER OPERATION (Continued)	
	4 Trigger the alarm by opening the hood. • Does the alarm operate properly? → **Yes** The anti-theft system is operating properly. CLARIFY the concern with the customer. → **No** If the horn does not sound, GO to **G2**. If the parking lamps do not illuminate, GO to **G5**. If the high beams do not illuminate, GO to **G6**. If the alarm does not trigger when the driver or passenger door is opened, GO to **G7**. If the courtesy lamps do not illuminate, GO to **G7**. If the alarm does not trigger when the hood is opened, GO to **G8**.
G2 CHECK THE HORN MANUALLY	
	1 Press the steering wheel pad horn switch. • Does the horn sound? → **Yes** GO to **G3**. → **No** REFER to Section 413-06.
G3 CHECK THE HORN WITH SCIL ACTIVE COMMAND HORN CONTROL	
1 2 3 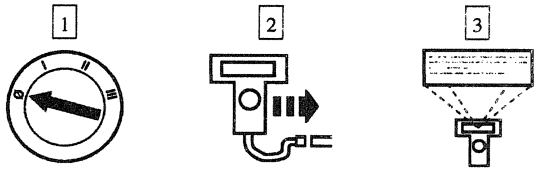 NGS	3 Trigger the SCIL active command HORN CONTROL to ON. • Does the horn sound? → **Yes** The anti-theft system is operating properly. CLARIFY the concern with the customer. → **No** GO to **G4**.

(Continued)

Official Licensed Product Ford Motor Company

DIAGNOSIS AND TESTING (Continued)

PINPOINT TEST G: THE ALARM SYSTEM DOES NOT OPERATE PROPERLY (Continued)

TEST CONDITIONS	TEST DETAILS/RESULTS/ACTIONS
G4 CHECK CIRCUIT 6 (Y/LG) FOR OPEN AND SHORT TO GROUND	
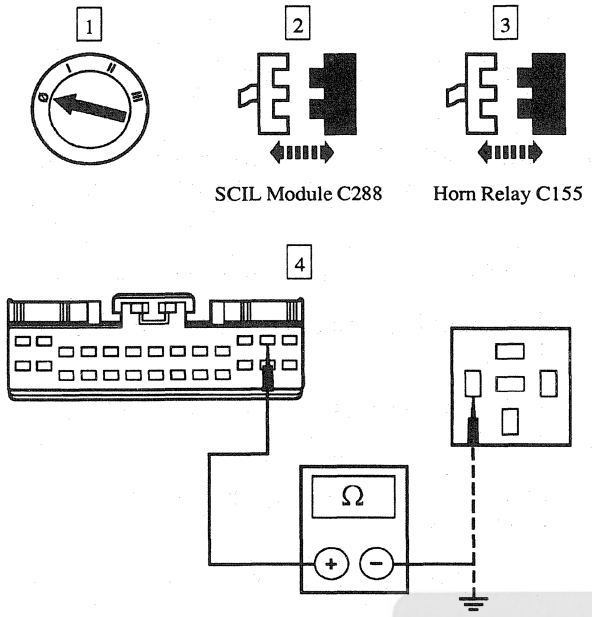	4 Measure the resistance between SCIL module C288-12, circuit 6 (Y/LG), and horn relay C155-85, circuit 6 (Y/LG); and between SCIL module C288-12, circuit 6 (Y/LG), and ground. • Is the resistance less than 5 ohms between the two connectors and greater than 10,000 ohms between the SCIL module connector and ground? → **Yes** REPLACE the SCIL module; REFER to Section 419-10. TEST the system for normal operation. → **No** REPAIR circuit 6 (Y/LG). TEST the system for normal operation.
G5 CHECK THE PARKING LAMPS	
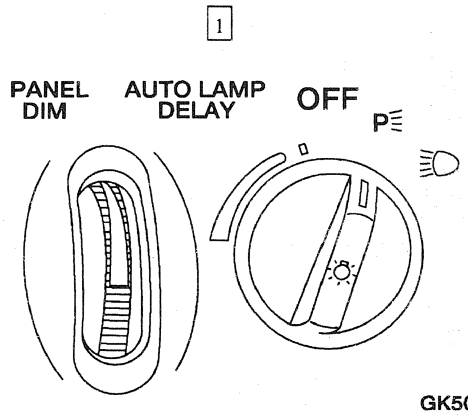	1 Turn the headlamp switch to the parking lamps position. • Do the parking lamps illuminate? → **Yes** REPLACE the SCIL module; REFER to Section 419-10. TEST the system for normal operation. → **No** REFER to Section 417-01.

(Continued)

Official Licensed Product Ford Motor Company

DIAGNOSIS AND TESTING (Continued)

PINPOINT TEST G: THE ALARM SYSTEM DOES NOT OPERATE PROPERLY (Continued)

TEST CONDITIONS	TEST DETAILS/RESULTS/ACTIONS
G6 CHECK THE HIGH BEAMS	
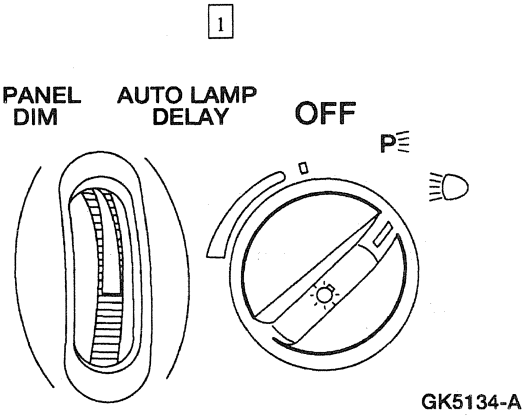	1 Turn the headlamp switch to the headlamp on position. 2 Place the multi-function switch in the high beam position. • Do the high beams illuminate? → **Yes** REPLACE the SCIL module; REFER to Section 419-10. TEST the system for normal operation. → **No** REFER to Section 417-01.
G7 CHECK THE COURTESY LAMPS	
	1 Open the driver door. • Do the courtesy lamps illuminate? → **Yes** REPLACE the SCIL module; REFER to Section 419-10. TEST the system for normal operation. → **No** REFER to Section 417-02.

(Continued)

Official Licensed Product
Ford Motor Company

DIAGNOSIS AND TESTING (Continued)

PINPOINT TEST G: THE ALARM SYSTEM DOES NOT OPERATE PROPERLY (Continued)

TEST CONDITIONS	TEST DETAILS/RESULTS/ACTIONS
G8 RETRIEVE THE DTCS	
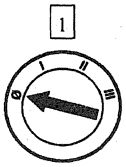 1 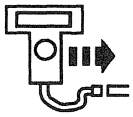 2 NGS 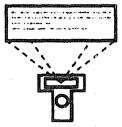 3 On Demand Self-Test	• Is DTC B1522 retrieved? → **Yes** GO to **G9**. → **No** GO to **G12**.
G9 CHECK THE HOOD SWITCH — MONITOR THE SCIL PID HOOD__SW	
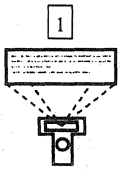 1	1 Monitor the SCIL PID HOOD__SW. 2 Open and close the hood. 3 Verify the hood is closed flush with the fenders. • Does the PID HOOD__SW read AJAR with the hood open and CLOSED with the hood closed? → **Yes** CHECK the hood switch mounting. LUBRICATE the switch as required. ADJUST the hood closure as required. → **No** GO to **G10**.

Official Licensed Product
Ford Motor Company®

(Continued)

DIAGNOSIS AND TESTING (Continued)

PINPOINT TEST G: THE ALARM SYSTEM DOES NOT OPERATE PROPERLY (Continued)

TEST CONDITIONS	TEST DETAILS/RESULTS/ACTIONS
G10 CHECK THE ANIT-THEFT HOOD SWITCH FOR SHORT TO GROUND — MONITOR THE PID HOOD__SW	
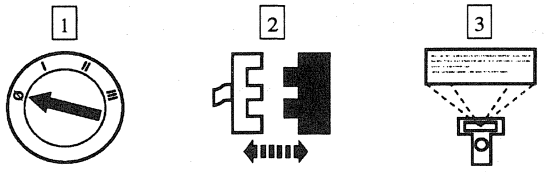 Anti-Theft Hood Switch C110	3 Monitor the SCIL PID HOOD__SW. • Does the SCIL PID HOOD__SW read CLOSED with the switch disconnected? → **Yes** REPLACE the anti-theft hood switch. TEST the system for normal operation. → **No** GO to **G11**.
G11 CHECK CIRCUIT 340 (R/LB) FOR SHORT TO GROUND — MONITOR THE PID HOOD__SW	
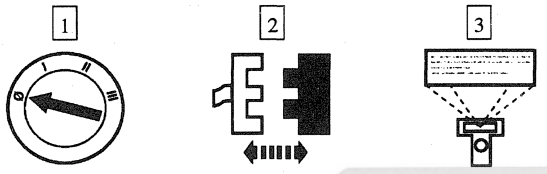 SCIL Module C286	3 Monitor the SCIL PID HOOD__SW. • Does the SCIL PID HOOD__SW read CLOSED? → **Yes** REPAIR circuit 340 (R/LB). TEST the system for normal operation. → **No** REPLACE the SCIL module; REFER to Section 419-10. TEST the system for normal operation.
G12 CHECK THE ANTI-THEFT HOOD SWITCH FOR OPEN	
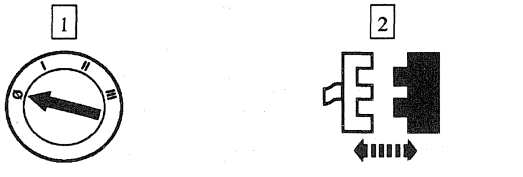 Anti-Theft Hood Switch C110 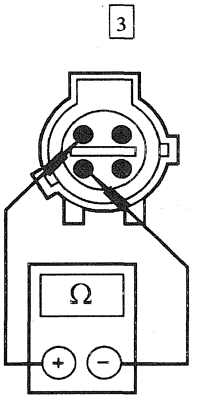 GK5064-A	3 Measure the resistance between the anti-theft hood switch terminals. • Is the resistance less than 5 ohms? → **Yes** GO to **G13**. → **No** REPLACE the anti-theft hood switch. TEST the system for normal operation.

(Continued)

Official Licensed Ford Motor Company

DIAGNOSIS AND TESTING (Continued)

PINPOINT TEST G: THE ALARM SYSTEM DOES NOT OPERATE PROPERLY (Continued)

TEST CONDITIONS	TEST DETAILS/RESULTS/ACTIONS
G13 CHECK CIRCUIT 57 (BK) FOR OPEN	
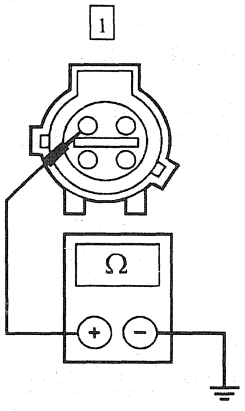 GN5065-A	1 Measure the resistance between anti-theft hood switch C110, circuit 57 (BK), and ground. • Is the resistance less than 5 ohms? → **Yes** GO to **G14**. → **No** REPAIR circuit 57 (BK). TEST the system for normal operation.
G14 CHECK CIRCUIT 340 (R/LB) FOR OPEN	
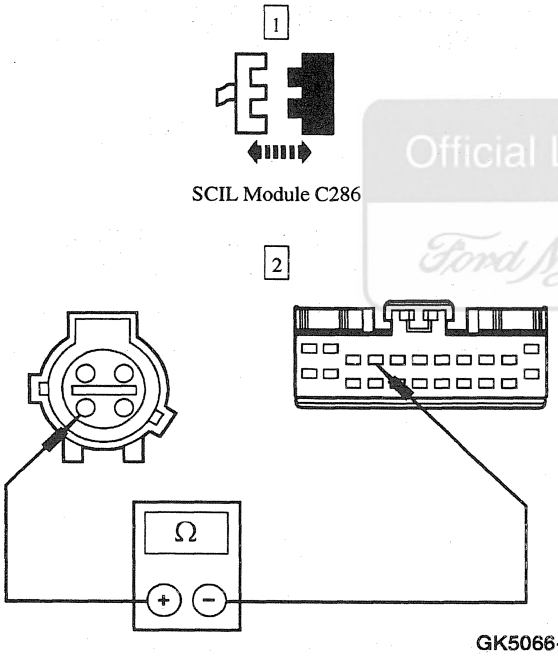 GK5066-A	2 Measure the resistance between SCIL module C286-4, circuit 340 (R/LB), and anti-theft hood switch C110, circuit 340 (R/LB). • Is the resistance less than 5 ohms? → **Yes** REPLACE the SCIL module; REFER to Section 419-10. TEST the system for normal operation. → **No** REPAIR circuit 340 (R/LB). TEST the system for normal operation.

Official Licensed Product
Ford Motor Company

REMOVAL AND INSTALLATION

Anti-Theft Switch — Door Disarm

Removal

1. Remove the door trim panel; refer to Section 501-05.

REMOVAL AND INSTALLATION (Continued)

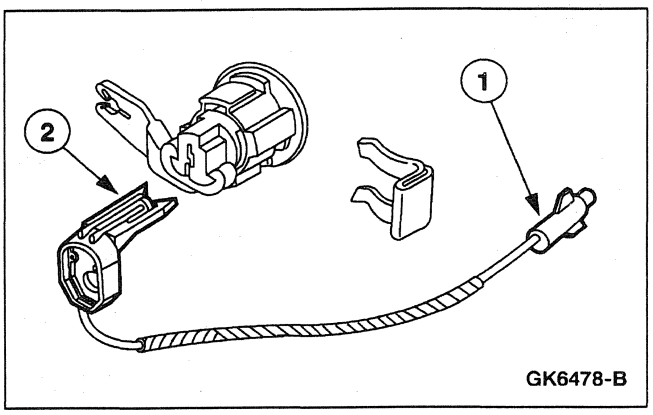

2. Remove the door disarm switch.
   1 Disconnect the electrical connector.
   2 Remove the door disarm switch.

Installation

1. To install, reverse the removal procedure.

Module — Steering Column Ignition Lighting (SCIL)

NOTE: The PATS is internal to the SCIL module. Refer to Section 419-10.

Official Licensed
Ford Motor Company

SECTION 419-01B Anti-Theft — PATS

VEHICLE APPLICATION: Mark VIII

SUBJECT **PAGE**

DESCRIPTION AND OPERATION
Anti-Theft — Passive 419-01B-2
DIAGNOSIS AND TESTING
Anti-Theft — PATS 419-01B-3
Inspection and Verification 419-01B-3
SCIL Module Active Command Index 419-01B-6
SCIL Module Diagnostic Trouble Code (DTC) Index 419-01B-3
SCIL Module Parameter Identification (PID) Index 419-01B-5
Pinpoint Tests 419-01B-8
Symptom Chart 419-01B-7
REMOVAL AND INSTALLATION
Antenna — Passive Anti-Theft System (PATS) 419-01B-17
GENERAL PROCEDURES
Key Programming — Key Initialization Sequence 419-01B-19
Key Programming — New Key (45 Minute Procedure) 419-01B-22
Key Programming — New Key (Eight Minute Procedure) 419-01B-21
Key Programming — Spare 419-01B-20

Official Licensed Product
Ford Motor Company

DESCRIPTION AND OPERATION

Anti-Theft — Passive

Passive Anti-Theft System Components

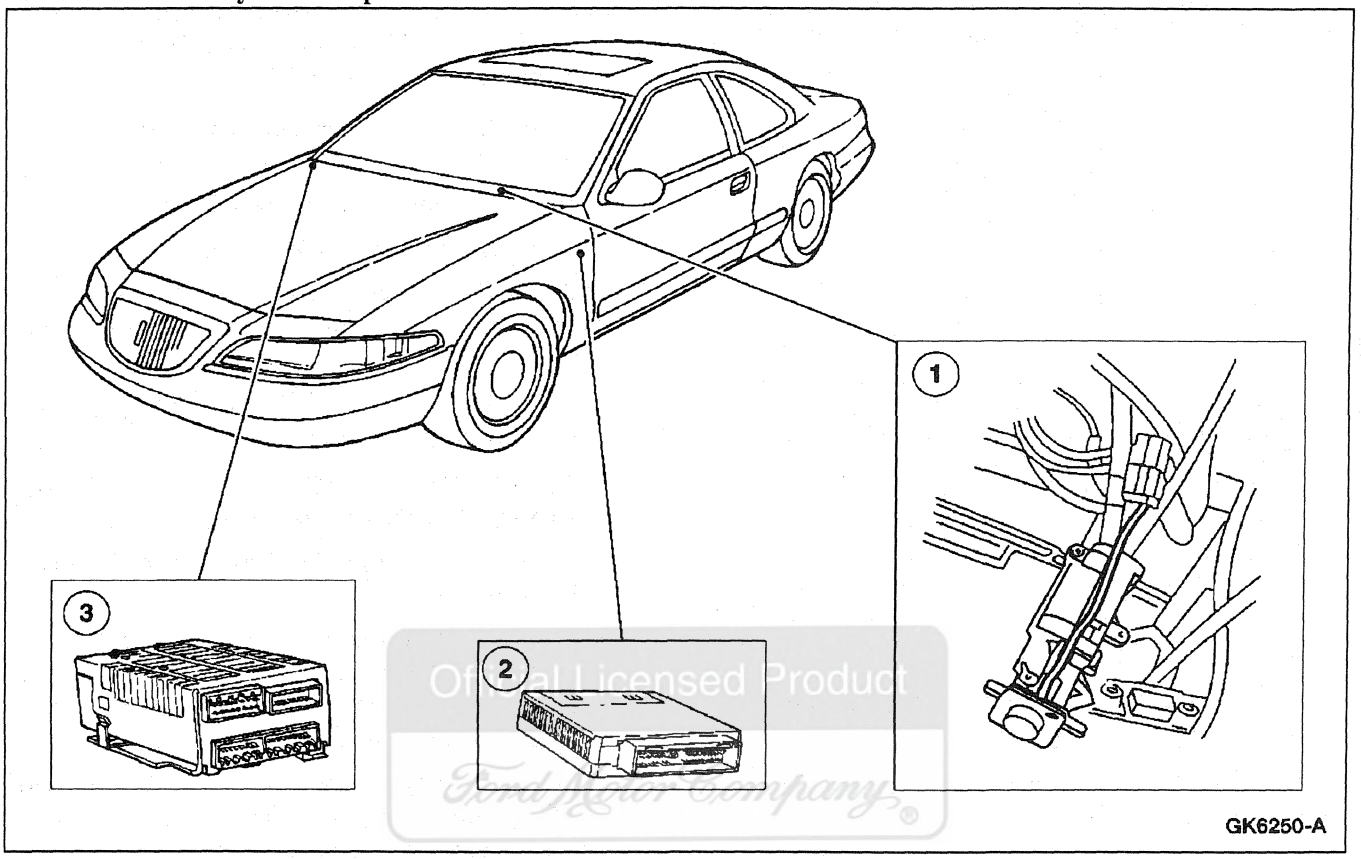

Official Licensed Product
Ford Motor Company

Item	Part Number	Description
1	—	Steering Column/Ignition/Lighting (SCIL) Control Module
2	12A650	Powertrain Control Module
3	—	Receiver Antenna

The passive anti-theft system is managed by the steering column/ignition/lighting (SCIL) module.

The passive anti-theft system provides vehicle protection against unauthorized vehicle operation.

A violation of vehicle security (sensed through the passive anti-theft antenna) will disable the powertrain control module (PCM)(12A650), thus preventing the vehicle from being started.

The vehicle anti-theft system is automatically enabled and disabled when the ignition switch is turned from ACC to RUN. An antenna contained in the ignition cylinder energizes the electrically coded ignition key.

The antenna receives a signal from the ignition key and transfers the signal to the SCIL module.

The SCIL module decodes the signal and compares it to the stored codes in memory.

If the coded signal is valid and the vehicle can be started, the SCIL module sends a signal to the PCM. The anti-theft indicator will also prove out for three seconds.

If the SCIL module does not receive a valid code within 800 milliseconds, the module registers a theft data value and disables the PCM. The vehicle will not start.

DIAGNOSIS AND TESTING

Anti-Theft — PATS

Refer to Electrical and Vacuum Troubleshooting Manual, Cell 112, Anti-Theft Protection System for schematic and connector information.

Special Tool(s)

ST1137-A	73 Digital Multimeter or equivalent 105-R0051
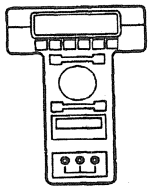 ST1217-A	New Generation Star (NGS) Tester or equivalent 418-F048 (418-F048 (007-00500))

Inspection and Verification

1. Verify the customer concern by operating the passive anti-theft system (PATS).
2. Visually inspect for obvious signs of mechanical and electrical damage.

Visual Inspection Chart

Mechanical	Electrical
• Ignition lock cylinder • Encoded ignition key • Use of a non-encoded ignition key • Use of a non-programmed ignition key	• SCIL module • PATS receiver antenna • Circuitry open/shorted • Loose or corroded connections

3. If the concern remains after the inspection, connect the New Generation STAR (NGS) Tester to the data link connector (DLC) located beneath the instrument panel and select the vehicle to be tested from the NGS menu. If the NGS does not communicate with the vehicle:
   - check that the program card is properly installed.
   - check the connections to the vehicle.
   - check the ignition switch position.
4. If the NGS still does not communicate with the vehicle, refer to the New Generation STAR Tester manual.
5. Perform the DATA LINK DIAGNOSTIC TEST. If the NGS responds with:
   - CKT914, CKT915 or CKT70 = ALL ECUS NO RESP/NOT EQUIP, refer to Section 418-00.
   - NO RESP/NOT EQUIP for SCIL module, go to Pinpoint Test C.
   - SYSTEM PASSED, retrieve and record the continuous diagnostic trouble codes (DTCs), erase the continuous DTCs and perform self-test diagnosis for the SCIL.
6. If the DTCs retrieved are related to the concern, go to SCIL Module Diagnostic Trouble Code (DTC) Index to continue diagnostics.
7. If no DTCs related to the concern are retrieved, proceed to Symptom Chart to continue diagnostics.

SCIL Module Diagnostic Trouble Code (DTC) Index

SCIL Module Diagnostic Trouble Code (DTC) Index

DTC	Description	DTC Caused By	Action To Take
C1446	Brake Switch Circuit Failure	SCIL	REFER to Section 206-05.
B1246	Panel Dim Potentiometer Switch Circuit Failure	SCIL	REFER to Section 417-02.
B1312	Lamp Headlamp Input Circuit Short to Battery	SCIL	REFER to Section 417-01.
B1334	Luggage Compartment Door Ajar Circuit Short to Ground	SCIL	REFER to Section 417-02.
B1342	ECU Defective	SCIL	REPLACE the SCIL module; REFER to Section 419-10.
B1353	Ignition Key-In Circuit Open	SCIL	REFER to Section 211-05.

(Continued)

DIAGNOSIS AND TESTING (Continued)

SCIL Module Diagnostic Trouble Code (DTC) Index

DTC	Description	DTC Caused By	Action To Take
B1360	Ignition RUN/ACC Circuit Open	SCIL	REFER to Section 211-05.
B1364	Ignition START Circuit Open	SCIL	REFER to Section 211-05.
B1446	Wiper Park Sense Circuit Failure	SCIL	REFER to Section 501-16.
B1485	Brake Pedal Input Short to Battery	SCIL	REFER to Section 417-01.
B1509	Flash-To-Pass Switch Circuit Short to Battery	SCIL	REFER to Section 417-01.
B1522	Hood Switch Circuit Short to Ground	SCIL	REFER to Section 419-01A.
B1562	Door Lock Cylinder Circuit Short to Ground	SCIL	REFER to Section 419-01A.
B1566	Door Ajar Circuit Short to Ground	SCIL	REFER to Section 417-02.
B1600	PATS Ignition Key Transponder Signal Is Not Received	SCIL	GO to Pinpoint Test A.
B1601	PATS Received Incorrect Key Code From Ignition Key Transponder	SCIL	GO to Pinpoint Test B.
B1676	Battery Voltage Out of Range	SCIL	REFER to Section 414-00.
B1682	PATS Is Disabled (Check Link Between PATS And Transponder)	SCIL	GO to Pinpoint Test A.
B1687	Lamp Dome Input Circuit Short To Battery	SCIL	REFER to Section 417-02.
B1689	Autolamp Delay Circuit Failure	SCIL	REFER to Section 417-01.
B1796	Lamp Headlamp Low Beam Circuit Short to Battery	SCIL	REFER to Section 417-01.
B1875	Turn Signal/Hazard Switch Signal Circuit Failure	SCIL	REFER to Section 417-01.
B1980	Bulb Outage Condition Detected	SCIL	REFER to Section 417-01.
B2328	Steering Column Reach Feedback Potentiometer Circuit Failure	SCIL	REFER to Section 211-05.
B2332	Steering Column Tilt Feedback Potentiometer Circuit Failure	SCIL	REFER to Section 211-05.
B2351	Steering Column Switch Signal Circuit Failure	SCIL	REFER to Section 211-05.
U1027	SCP Invalid or Missing Data For Engine RPM	PCM	REFER to Powertrain Control/Emissions Diagnosis Manual [1].
U1041	SCP Invalid or Missing Data for Vehicle Speed	ABS	PERFORM ABS On-Demand Self-Test.

(Continued)

1 Can be purchased as a separate item.

DIAGNOSIS AND TESTING (Continued)

SCIL Module Diagnostic Trouble Code (DTC) Index

DTC	Description	DTC Caused By	Action To Take
U1057	SCP Invalid or Missing Data for Vehicle Configuration	SCIL	PERFORM SCIL On-Demand Self-Test.
U1059	SCP Invalid or Missing Data for Transmission/Transaxle/ PRNDL	PCM	REFER to Powertrain Control/Emissions Diagnosis Manual [2].
U1123	SCP Invalid or Missing Data for Odometer	ABS	PERFORM the ABS On-Demand Self-Test.
U1147	SCP Invalid or Missing Data for Vehicle Security	PCM	PERFORM PCM Self-Test.
U1180	SCP Invalid or Missing Data for Personalization (Memory) Features	DDM	PERFORM DDM On-Demand Self-Test.
U1181	SCP Invalid or Missing Data for Personalization (Memory) Features	DDM	PERFORM DDM On-Demand Self-Test.
U1197	SCP Invalid or Missing Data for Door Locks	DDM	PERFORM DDM On-Demand Self-Test.
U1198	SCP Invalid or Missing Data for External Access (Doors)	DDM	PERFORM DDM On-Demand Self-Test.
U1199	SCP Invalid or Missing Data for External Access (Doors)	DDM	PERFORM DDM On-Demand Self-Test.
U1211	SCP Invalid or Missing Data for Restraints	DSM	PERFORM DSM On-Demand Self-Test.
U1222	SCP Invalid or Missing Data for Interior Lamps	DDM	PERFORM the DDM On-Demand Self-Test.

Unofficial Licensed Product Ford Motor Company

SCIL Module Parameter Identification (PID) Index

SCIL Module Parameter Identification (PID) Index

Display	Description	Content
CCNTSCI	Number of Continuous DTCs On SCIL	one count per bit
BOO__SCI	Brake Switch Input	ON, OFF
PARK__BRK	Parking Brake Switch Input	ON, OFF
TILT	Steering Column Tilt Switch	SHORT, UP, DOWN, OFF
TELESCP	Steering Column Telescope Switch	SHORT, IN, OUT, OFF
TILTPOS	Tilt Position Sensor	SENSED, notSEN
TELEPOS	Telescope Position Sensor	SENSED, notSEN
TURN__SW	Left and Right Turn Signal Switch	OFF, LEFT, RIGHT, SHORT
LBEAMSW	Low Beam Switch	ON, OFF
HBEAMSW	High Beam Switch	ON, OFF
PARK__SW	Parking Switch	ON, OFF
LIGHTSN	Ambient Light	DAY, NIGHT
FLASH	Flash to Pass Switch	ON, OFF
FTURN__L	Left & Right Front Turn Lamp	R__OPEN, L__OPEN, L/R__OPEN OK

(Continued)

2 Can be purchased as a separate item.

DIAGNOSIS AND TESTING (Continued)

SCIL Module Parameter Identification (PID) Index

Display	Description	Content
RTURN__L	Left & Right Rear Turn Lamp	R__OPEN, L__OPEN, L/R__OPEN OK
TAILLMP	Left & Right Tail Lamp	OPEN, OK
LOWBEAM	Low Beam Lamp	R__OPEN, L__OPEN, L/R__OPEN OK
AUTOLMP	Autolamp Switch	ON, OFF
ALP__IMP	Autolamp Analog Input	0-100%
DOMESW	Dome Lamp Switch	ACTIVE, notACT
PANLDIM	Panel Dim Intensity Switch	0-100%
HOOD__SW	Hood Ajar Switch	AJAR, CLOSED
DECKLID	Decklid Ajar Switch	AJAR, CLOSED
P__DR__SW	Passenger Door Ajar Switch	AJAR, CLOSED
IGN__KEY	Ignition Key In/Out	IN, OUT
IGN__SCI	Ignition Switch	START, RUN, OFF, ACCSSY
WPPRKSW	Windshield Wiper Park Sense	notPRK, PARKED
NUMKEYS	Number of Ignition Key Codes Supported	BCD (valid range 0-16)
DRLKCYL	Door Lock Cylinder	ON, OFF
ENABLE	PATS System Status	ON, OFF
FAILSAF	PATS System Status	ON, OFF

SCIL Module Active Command Index

Ford Motor Company

SCIL Module Active Command Index

Active Command	Display	Function
PID Latch	PID Latch	ON OFF
ONE TOUCH WINDOW DWN & ACCY DELAY	ACCY RLY	ON, OFF
WARNING LAMPS AND CHIME	CHIME	ON, OFF
	ANTI-THEFT	ON, OFF
	AUTOLMP	ON, OFF
	HIGH BEAM	ON, OFF
INTERIOR COURTESY LAMPS	INT LAMPS	ON, OFF
	MIRRORLAMP	ON, OFF
DECKLID RELEASE	RELEASE	ON, OFF
TURN SIGNAL AND MARKER LAMPS	LF TURN	ON, OFF
	RF TURN	ON, OFF

(Continued)

SCIL Module Active Command Index

Active Command	Display	Function
	LR TURN	ON, OFF
	RR TURN	ON, OFF
	PARKLAMPS	ON, OFF
HEADLAMP CONTROL	LEFT LOW	ON, OFF
	RIGHT LOW	ON, OFF
	HIGH BEAM	ON, OFF
	DRUN LAMP	ON, OFF
	LF CORNER	ON, OFF
	RF CORNER	ON, OFF
HORN CONTROL	HORN	ON, OFF
BACKLIGHTING INTENSITY	INTENSITY	0%-100%
COURTESY LAMP INTENSITY	INTENSITY	0%-100%
DOOR AJAR SIGNAL	DOOR AJAR	ON, OFF
TRANSMIT SIGNAL COMMAND	TRANSMIT	ON, OFF

(Continued)

DIAGNOSIS AND TESTING (Continued)

SCIL Module Active Command Index

Active Command	Display	Function
BRAKE SYSTEM	BRK/SHIFT	ON, OFF
	PARK BRK	ON, OFF
STEERING COLUMN CONTROL	TILT UP	ONE SECOND TIME OUT
	TILT DOWN	ONE SECOND TIME OUT

(Continued)

SCIL Module Active Command Index

Active Command	Display	Function
	TELSCP IN	ONE SECOND TIME OUT
	TELSCPOUT	ONE SECOND TIME OUT
KEYCODE ERASE TIME SET	MINUTES	8-63 Minutes

Symptom Chart

Symptom Chart

Condition	Possible Source	Action
• No Communication With the Module — Steering Column/Ignition/Lighting (SCIL) Module	• SCIL module. • Circuitry.	• GO to Pinpoint Test C.
• The Anti-Theft Alarm Indicator Always/Never On	• Circuitry. • SCIL module. • Warning indicator panel.	• REFER to Section 419-01A.

Ford Motor Company

DIAGNOSIS AND TESTING (Continued)

Pinpoint Tests

⚠ CAUTION: Be careful when probing the fuse junction panel, power distribution box or any connectors. Damage will result to the connector receptacle if the probe or terminal being used is too large.

⚠ CAUTION: Electronic modules are sensitive to electrical charges. If exposed to these charges, damages may result.

PINPOINT TEST A: PATS IGNITION KEY TRANSPONDER SIGNAL IS NOT RECEIVED

NOTE: If the vehicle starts and runs for longer than three seconds, do not diagnose this DTC.

NOTE: All video display terminals, including the SBDS®, must be at least 1.0 meter (3 feet) away from the vehicle during the self-test to avoid interference with the PATS system. Locate the SBDS® on the driver side of the vehicle.

TEST CONDITIONS	TEST DETAILS/RESULTS/ACTIONS
A1 CHECK THE PATS KEY	
1 3 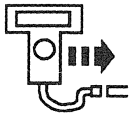 NGS 4 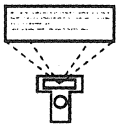 PATS On-Demand Self-Test	2 Insert two new uncut Mark VIII PATS encoded keys into the ignition lock cylinder. • Is DTC B1600 retrieved? → **Yes** GO to **A2**. → **No** REPLACE the ignition keys. The original key is damaged. PROGRAM both the keys; REFER to Programming — New Key (Eight Minute Procedure). TEST the system for normal operation.

Official Licensed Product
Ford Motor Co.

(Continued)

DIAGNOSIS AND TESTING (Continued)

PINPOINT TEST A: PATS IGNITION KEY TRANSPONDER SIGNAL IS NOT RECEIVED (Continued)

TEST CONDITIONS	TEST DETAILS/RESULTS/ACTIONS
A2 CHECK CIRCUIT 1215 (W/LG) FOR SHORT TO POWER — PATS ANTENNA CONNECTED	
1 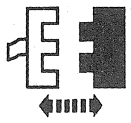 SCIL Module C286 2 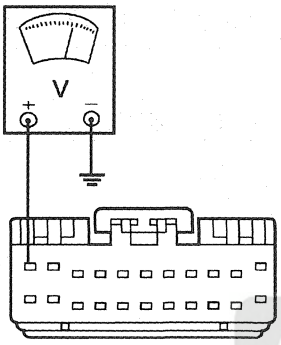 AK0951-B	2 Measure the voltage between SCIL module C286-1, circuit 1215 (W/LG), and ground. • Is any voltage indicated? → **Yes** GO to **A3**. → **No** GO to **A5**.
A3 CHECK CIRCUIT 1215 (W/LG) FOR SHORT TO POWER — PATS ANTENNA DISCONNECTED	
1 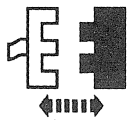 PATS Antenna C284 2 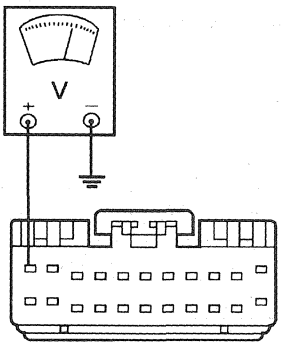 AK0951-B	2 Measure the voltage between SCIL module C286-1, circuit 1215 (W/LG), and ground. • Is any voltage indicated? → **Yes** REPAIR circuit 1215 (W/LG). TEST the system for normal operation. → **No** GO to **A4**.

Official Licensed Product
Ford Motor Company

(Continued)

DIAGNOSIS AND TESTING (Continued)

PINPOINT TEST A: PATS IGNITION KEY TRANSPONDER SIGNAL IS NOT RECEIVED (Continued)

TEST CONDITIONS	TEST DETAILS/RESULTS/ACTIONS
A4 CHECK CIRCUIT 1216 (GY/O) FOR SHORT TO POWER	
1 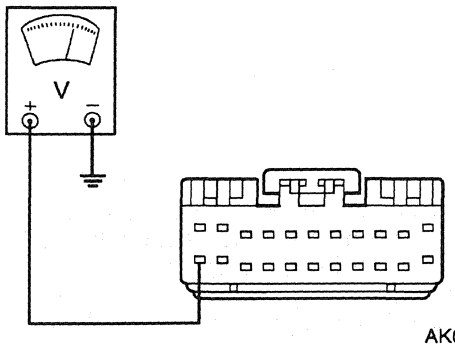 AK0952-B	1 Measure the voltage between SCIL module C286-12, circuit 1216 (GY/O), and ground. • Is any voltage indicated? → **Yes** REPAIR circuit 1216 (GY/O). TEST the system for normal operation. → **No** REPLACE the passive anti-theft system (PATS) antenna; REFER to Antenna — Passive Anti-Theft System (PATS). TEST the system for normal operation.
A5 CHECK CIRCUIT 1215 (W/LG) FOR SHORT TO GROUND — PATS ANTENNA CONNECTED	
1 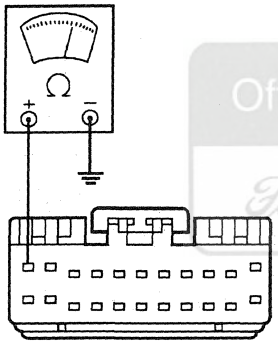 AK0953-B	1 Measure the resistance between SCIL module C286-1, circuit 1215 (W/LG), and ground. • Is the resistance greater than 10,000 ohms? → **Yes** GO to **A8**. → **No** GO to **A6**.

Official Licensed Product
Ford Motor Company

(Continued)

DIAGNOSIS AND TESTING (Continued)

PINPOINT TEST A: PATS IGNITION KEY TRANSPONDER SIGNAL IS NOT RECEIVED (Continued)

TEST CONDITIONS	TEST DETAILS/RESULTS/ACTIONS
A6 CHECK CIRCUIT 1215 (W/LG) FOR SHORT TO GROUND — PATS ANTENNA DISCONNECTED	
1 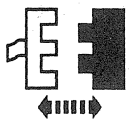 PATS Antenna C284 2 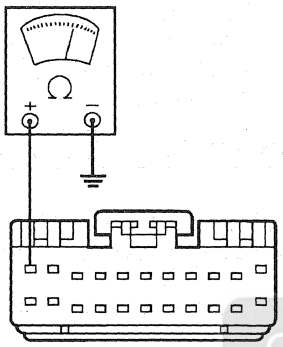 AK0953-B	2 Measure the resistance between steering column/ignition/lighting (SCIL) module C286-1, circuit 1215 (W/LG), and ground. • Is the resistance greater than 10,000 ohms? → **Yes** GO to **A7**. → **No** REPAIR circuit 1215 (W/LG). TEST the system for normal operation.
A7 CHECK CIRCUIT 1216 (GY/O) FOR SHORT TO GROUND	
1 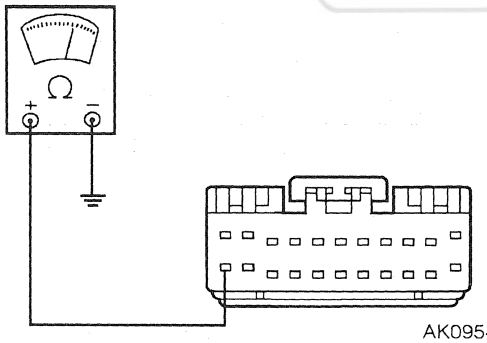 AK0954-B	1 Measure the resistance between SCIL module C286-12, circuit 1216 (GY/O), and ground. • Is the resistance greater than 10,000 ohms? → **Yes** REPAIR circuit 1216 (GY/O). TEST the system for normal operation. → **No** REPLACE the passive anti-theft system (PATS) antenna; REFER to Antenna — Passive Anti-Theft System (PATS). TEST the system for normal operation.

Official Licensed Product Ford Motor Company

(Continued)

DIAGNOSIS AND TESTING (Continued)

PINPOINT TEST A: PATS IGNITION KEY TRANSPONDER SIGNAL IS NOT RECEIVED (Continued)

TEST CONDITIONS	TEST DETAILS/RESULTS/ACTIONS
A8 CHECK THE ANTENNA CIRCUIT RESISTANCE FOR OPEN	
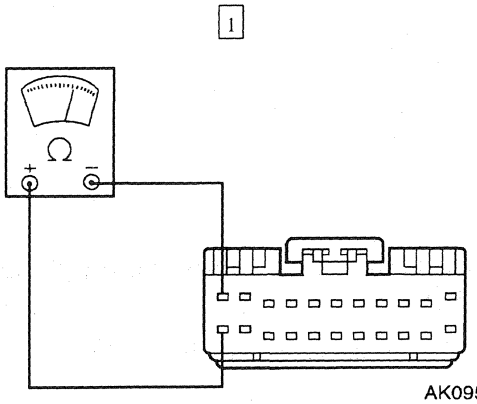	1 Measure the resistance between SCIL module C286-1, circuit 1215 (W/LG), and C286-12, circuit 1216 (GY/O). • Is the resistance less than 3 ohms? → **Yes** GO to **A12**. → **No** GO to **A9**.
A9 CHECK THE RESISTANCE HIGH LIMIT	
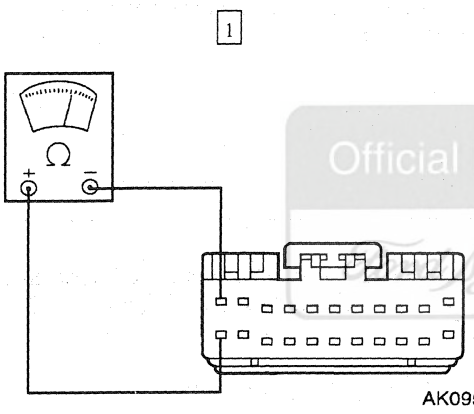	1 Measure the resistance between SCIL module C286-1, circuit 1215 (W/LG), and C286-12, circuit 1216 (GY/O). • Is the resistance greater than 6 ohms? → **Yes** GO to **A10**. → **No** REPLACE the SCIL module; REFER to Section 419-10. TEST the system for normal operation.

Official Licensed Product Ford Motor Company

(Continued)

DIAGNOSIS AND TESTING (Continued)

PINPOINT TEST A: PATS IGNITION KEY TRANSPONDER SIGNAL IS NOT RECEIVED (Continued)

TEST CONDITIONS	TEST DETAILS/RESULTS/ACTIONS
A10 CHECK THE ANTENNA RESISTANCE	
1 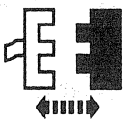 PATS Antenna C284 2 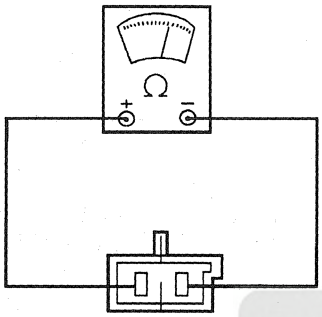 AK0956-A	2 Measure the resistance between the PATS antenna terminals. • Is the resistance greater than 5 ohms? → **Yes** REPLACE the PATS antenna; REFER to Antenna — Passive Anti-Theft System (PATS). TEST the system for normal operation. → **No** GO to **A11**.
A11 CHECK THE RESISTANCE OF CIRCUIT 1215 (W/LG)	
1 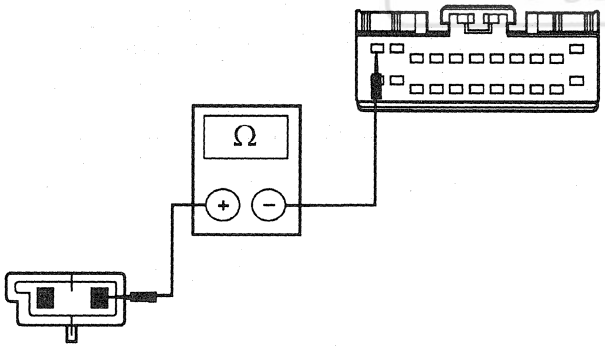 GK5024-A	1 Measure the resistance between SCIL module C286-1, and PATS antenna C284, circuit 1215 (W/LG). • Is the resistance greater than 1 ohm? → **Yes** REPAIR circuit 1215 (W/LG). TEST the system for normal operation. → **No** REPAIR circuit 1216 (GY/O). TEST the system for normal operation.

Official Licensed Product Ford Motor Company

(Continued)

DIAGNOSIS AND TESTING (Continued)

PINPOINT TEST A: PATS IGNITION KEY TRANSPONDER SIGNAL IS NOT RECEIVED (Continued)

TEST CONDITIONS	TEST DETAILS/RESULTS/ACTIONS
A12 CHECK THE PATS ANTENNA FOR A SHORT	
1 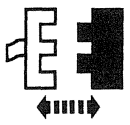 PATS Antenna C284 2 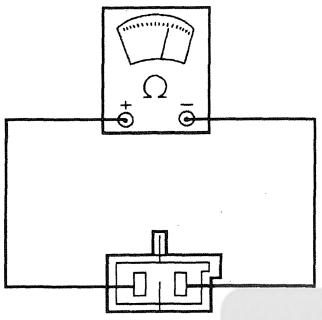 AK0956-A	2 Measure the resistance between the PATS antenna terminals. • Is the resistance less than 3 ohms? → **Yes** REPLACE the PATS antenna; REFER to Antenna — Passive Anti-Theft System (PATS). TEST the system for normal operation. → **No** REPAIR circuit 1215 (W/LG), and/or circuit 1216 (GY/O). TEST the system for normal operation.

Official Licensed P... Ford Motor Company

PINPOINT TEST B: PATS RECEIVED INCORRECT KEY CODE FROM IGNITION KEY TRANSPONDER

TEST CONDITIONS	TEST DETAILS/RESULTS/ACTIONS
B1 CHECK FOR A PROGRAMMED KEY	
1 2 3 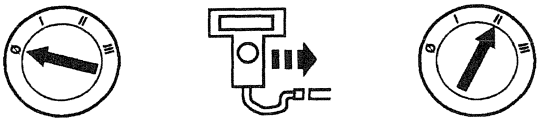 NGS 4 PATS On-Demand Self-Test	3 Use the programmed ignition key to repeat the self-test.

(Continued)

DIAGNOSIS AND TESTING (Continued)

PINPOINT TEST B: PATS RECEIVED INCORRECT KEY CODE FROM IGNITION KEY TRANSPONDER (Continued)

TEST CONDITIONS	TEST DETAILS/RESULTS/ACTIONS
B1 CHECK FOR A PROGRAMMED KEY (Continued)	
	• Is DTC B1601 retrieved? → **Yes** PROGRAM the original ignition key to the SCIL module; REFER to Key Programming — New Key (Eight Minute Procedure). → **No** If a different DTC is retrieved, REFER to SCIL Module Diagnostic Trouble Code (DTC) Index. If no DTC is retrieved, DTC B1601 may have been set by the ignition switch being turned to RUN by an unprogrammed key.

PINPOINT TEST C: NO COMMUNICATION WITH THE MODULE — STEERING COLUMN/IGNITION/LIGHTING (SCIL) MODULE

TEST CONDITIONS	TEST DETAILS/RESULTS/ACTIONS
C1 CHECK CIRCUIT 875 (BK/LB) FOR OPEN	
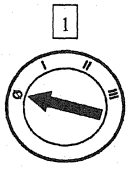 1 2 SCIL Module C288 3 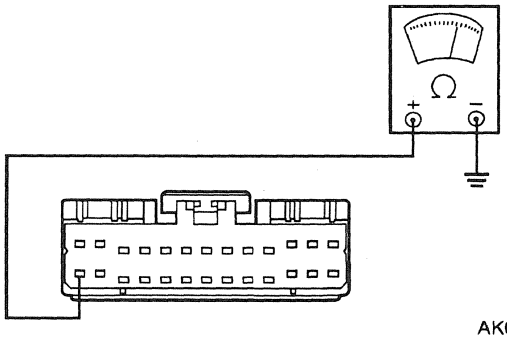 AK0313-B	3 Measure the resistance between SCIL module C288-14, circuit 875 (BK/LB), and ground. • Is the resistance less than 5 ohms? → **Yes** GO to **C2**. → **No** REPAIR circuit 875 (BK/LB). TEST the system for normal operation.

Official Licensed Product Ford Motor Company

(Continued)

DIAGNOSIS AND TESTING (Continued)

PINPOINT TEST C: NO COMMUNICATION WITH THE MODULE — STEERING COLUMN/IGNITION/LIGHTING (SCIL) MODULE (Continued)

TEST CONDITIONS	TEST DETAILS/RESULTS/ACTIONS
C2 CHECK CIRCUIT 57 (BK) FOR OPEN	
1 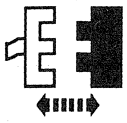 SCIL Module C287 2 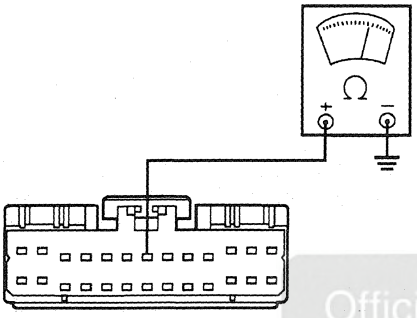 AK0314-B	2 Measure the resistance between SCIL module C287-7, circuit 57 (BK), and ground. • Is the resistance less than 5 ohms? → **Yes** GO to **C3**. → **No** REPAIR circuit 57 (BK). TEST the system for normal operation.
C3 CHECK FOR VOLTAGE TO THE SCIL MODULE	
1 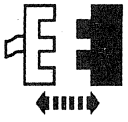 SCIL Module C289 2 3 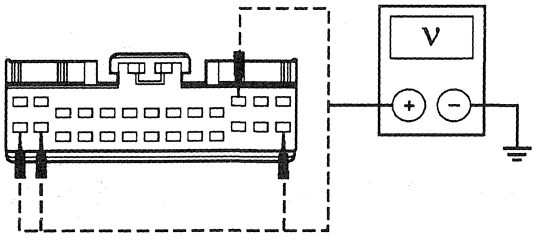 GK4906-A	3 Measure the voltage between the SCIL module C287 pins and ground; refer to the following chart: **Connector Pin** / **Circuit** C287-14 — 906 (R/O) C287-26 — 19 (LB/R) C287-15 — 1055 (W/LG) C287-11 — 1056 (DB/LG)

Official Licensed Product Ford Motor Company

(Continued)

DIAGNOSIS AND TESTING (Continued)

PINPOINT TEST C: NO COMMUNICATION WITH THE MODULE — STEERING COLUMN/IGNITION/LIGHTING (SCIL) MODULE (Continued)

TEST CONDITIONS	TEST DETAILS/RESULTS/ACTIONS
C3 CHECK FOR VOLTAGE TO THE SCIL MODULE (Continued)	
4 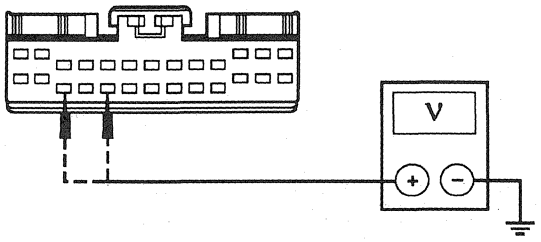 GK4907-A	4 Measure the voltage between the SCIL module C288 pins and ground; refer to the following chart: Connector Pin / Circuit C288-16 — 251 (BR/O) C288-18 — 158 (BK/PK)
5 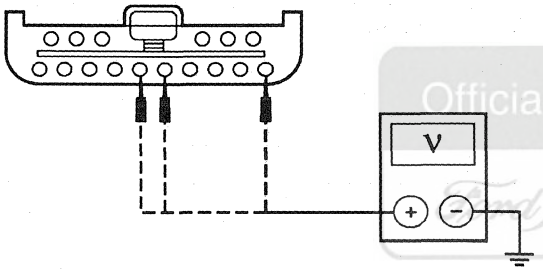 GK4908-A	5 Measure the voltage between the SCIL module C289 pins and ground; refer to the following chart: Connector Pin / Circuit C289-5 — 1058 (BR/W) C289-6 — 1057 (O/BK) C289-1 — 1046 (T) • Are all the voltages greater than 10 volts? → **Yes** REFER to Section 418-00. → **No** REPAIR the circuit in question. TEST the system for normal operation.

Official Licensed Reseller Ford Motor Company®

REMOVAL AND INSTALLATION

Antenna — Passive Anti-Theft System (PATS)

Removal

1. Remove the ignition switch lock cylinder (11582); refer to Section 211-04.

REMOVAL AND INSTALLATION (Continued)

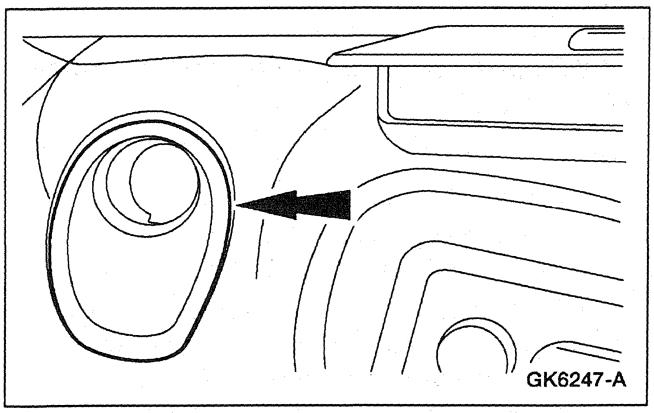

2. Remove ignition switch bezel.

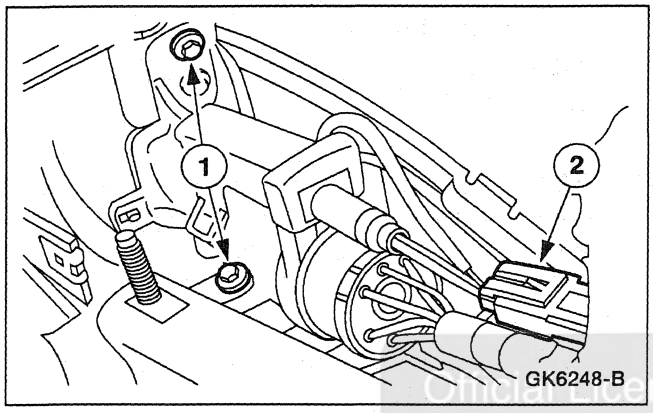

3. **NOTE:** It is not necessary to disconnect the ignition switch connector.

   Remove the ignition lock cylinder housing from the instrument panel.

   1 Remove the screws.

   2 Disconnect the electrical connector.

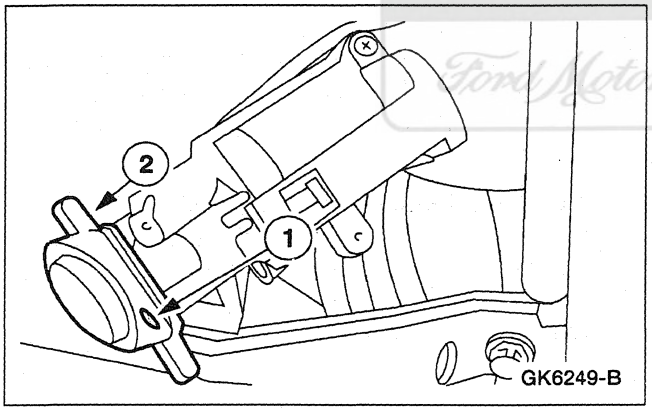

4. Remove the passive anti-theft system (PATS) antenna.

   1 Remove the screw.

   2 Pull the PATS antenna off the ignition lock cylinder housing.

Official Licensed Product
Ford Motor Company

Installation

1. To install, reverse the removal procedure.

GENERAL PROCEDURES

Key Programming — Key Initialization Sequence

1. **NOTE:** The following procedure must be performed when replacing the steering column/ignition/lighting (SCIL) module.

   NOTE: The SCIL module requires two keys to be programmed before it will allow the vehicle to be started. If a SCIL module is replaced the technician must inform the customer to program any additional keys.

   Insert the first key into the ignition and turn to RUN or START.

2. The theft indicator will turn on for three seconds, then off for one second, then on for up to one minute. (This indicates that the first key was programmed.)

3. Insert the second key into the ignition and turn to RUN or START.

4. Verify that the theft indicator will turn on for three seconds, then off to show that the second key is programmed.

5. **NOTE:** If the theft indicator flashes in place of the three second prove out, retry the above procedure keys were not programmed. (Otherwise there is a system problem, defective key, wiring or transceiver problem).

   Start the vehicle.

Official Licensed Product
Ford Motor Company

GENERAL PROCEDURES (Continued)

Key Programming — Spare

1. **NOTE:** The steering column/ignition/lighting (SCIL) module requires two keys to be programmed before it will allow the vehicle to be started. If a SCIL module is replaced, the technician must inform the customer to program any additional keys.

   NOTE: The SCIL module has a maximum capacity of eight keys.

   NOTE: The encoded vehicle keys must have the correct mechanical key cuts for the vehicle.

   Cycle the ignition switch from OFF to RUN using a programmed key. After the anti-theft indicator is lit solid for three seconds, remove the key.

2. Within 15 seconds, insert a new encoded key into the ignition switch and turn the key to RUN or START.

3. If the SCIL module has accepted the key, the anti-theft indicator lamp will illuminate for three seconds and the SCIL module will allow the vehicle to be started.

4. Repeat the procedure if additional encoded keys are to be programmed.

5. If the programming is not successful, the anti-theft indicator lamp will:
   1 Flash for 15 minutes if no encoded key is located and programmed. The key is either damaged or is a non-encoded key. (Try an alternate encoded key.)
   2 Flash for 15 minutes if the key code is received but the engine is disabled. The key was not programmed successfully. Repeat the procedure.
   3 Flash for 15 minutes if the programming is unsuccessful, the new key was not inserted within 15 seconds, all eight key memory locations are full or the key is not an encoded key. Repeat the procedure if the key is not encoded or may not have been inserted within the 15-second window.

Official Licensed Product
Ford Motor Company

GENERAL PROCEDURES (Continued)

Key Programming — New Key (Eight Minute Procedure)

Special Tool(s)

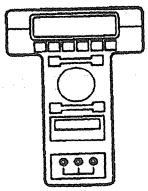 ST1217-A	New Generation STAR (NGS) Tester or equivalent 418-F048 (007-00500)

1. **NOTE:** This procedure is used if all previously programmed keys have been lost or the customer wants the previously programmed keys erased.

   NOTE: The passive anti-theft system (PATS) allows programming of only one key before the vehicle will start if the ignition lock cylinder assembly is replaced.

   If a programmed key is available, enter NGS: PATS, ACTIVE COMMAND modes.

Official Licensed Product
Ford Motor Company

2. **NOTE:** It will take eight minutes to erase the programmed codes.

   Select the steering column/ignition/lighting (SCIL) module active command Keycode Erase Time Set. Set minutes to eight.

3. **NOTE:** The SCIL module must remain in the diagnostic mode for the entire eight minutes after the ERASE signal is sent or the key codes will be retained. Monitoring of the erasure can be done with the PID NUM KEYS of the programmed keys after eight minutes.

   Select the SCIL module function tests. Trigger ignition key code ERASE ON. The key codes will be erased in eight minutes.

4. Place a new encoded key in the ignition. Turn the ignition switch to RUN.

5. For additional keys; refer to Key Programming — Spare.

GENERAL PROCEDURES (Continued)

Key Programming — New Key (45 Minute Procedure)

1. **NOTE:** This procedure is used when a customer has misplaced a key. This procedure is also used when no repair facility with diagnostic tools is available.

   NOTE: To preserve the high level of protection gained by the anti-theft system, this procedure's programming takes approximately 45 minutes.

   NOTE: The anti-theft system will abort initialization if the programming steps are not followed precisely. If the system aborts initialization, the process must be repeated.

   Insert an unprogrammed key into the ignition switch and turn to RUN. The anti-theft indicator lamp will begin to flash. The anti-theft indicator lamp will continue to flash for 15 minutes. The ignition switch must remain in the RUN position for the entire 15 minutes. The anti-theft indicator lamp will then go out.

Official Licensed Product
Ford Motor Company

2. Within five minutes, turn the ignition switch OFF for approximately one second.

3. Turn the ignition switch to RUN. The anti-theft indicator lamp will begin to flash. The lamp will continue to flash for 15 minutes. The ignition switch must remain in the RUN position for the entire 15 minutes. The anti-theft indicator lamp will then go out.

4. Within five minutes, turn the switch OFF for one second.

5. Turn the ignition switch to RUN. The anti-theft indicator lamp will begin to flash. The lamp will continue to flash for 15 minutes. The ignition switch must remain in RUN for the entire 15 minutes. The anti-theft indicator lamp will then go out.

6. Within five minutes, turn the ignition switch OFF for one second then back to RUN. The SCIL module will have erased the previous stored codes and the new encoded key will start the vehicle.

GENERAL PROCEDURES (Continued)

7. Program the additional keys; refer to Key Programming — Spare.

Official Licensed Product
Ford Motor Company

SECTION 419-02 Remote Convenience

VEHICLE APPLICATION: Mark VIII

SUBJECT	PAGE
DESCRIPTION AND OPERATION	
Universal Transmitter	419-02-2
DIAGNOSIS AND TESTING	
Universal Transmitter	419-02-3
Inspection and Verification	419-02-3
Pinpoint Tests	419-02-3
Symptom Chart	419-02-3
GENERAL PROCEDURES	
Programming	419-02-4

Official Licensed Product
Ford Motor Company

DESCRIPTION AND OPERATION

Universal Transmitter

Universal Transmitter

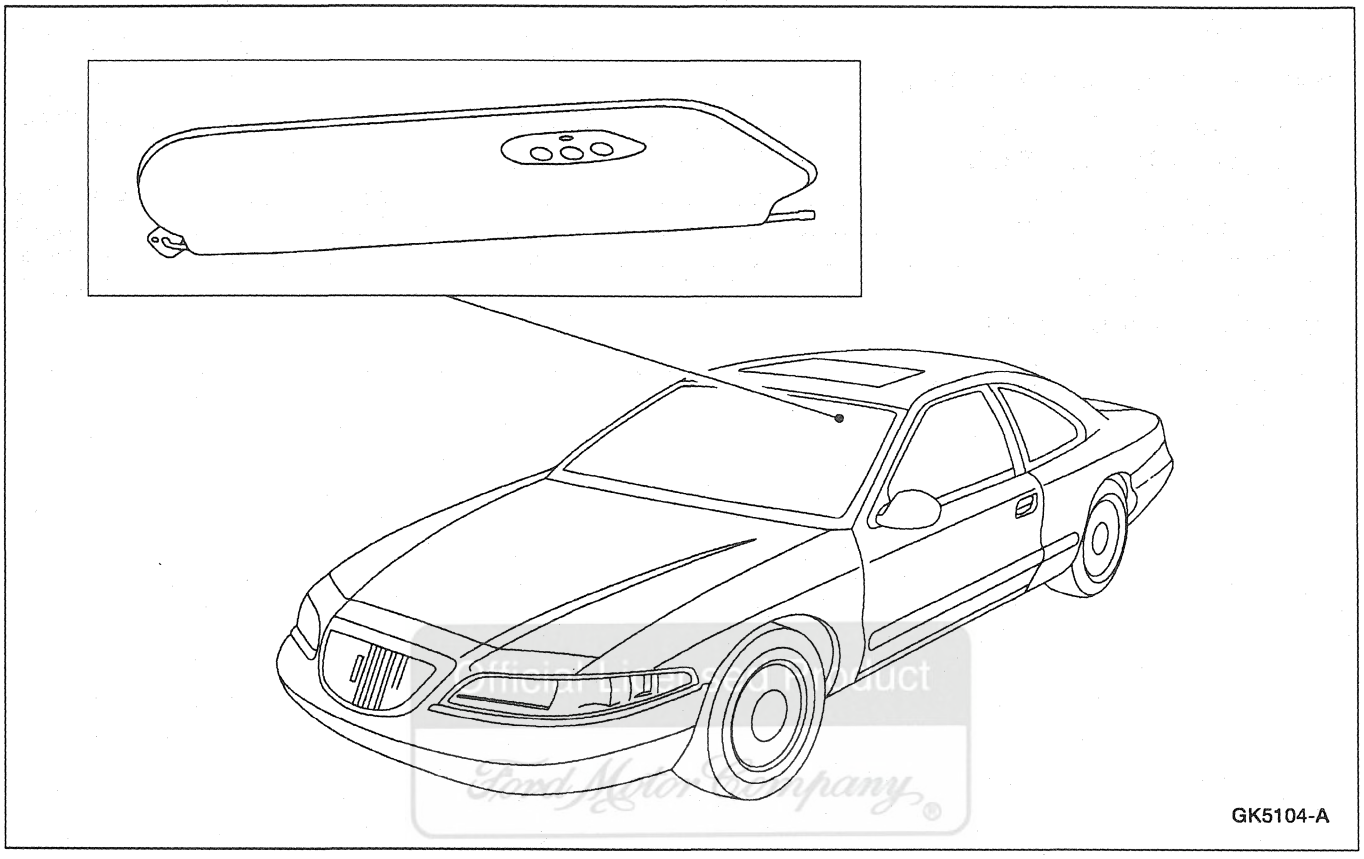

The HomeLink® universal transmitter provides a convenient way to replace up to three hand-held transmitters with a single built-in device. The universal transmitter:

- Will operate garage doors, gates, home/office lighting and security systems.
- Will actually learn and transmit the radio frequency of up to three hand-held transmitters from any of the systems mentioned above.
- Is an integral part of the LH inside visor and is powered by the vehicle battery and charging system.

DIAGNOSIS AND TESTING

Universal Transmitter

Refer to Electrical and Vacuum Troubleshooting Manual, Cell 89, Courtesy Lamps for schematic and connector information.

Special Tool(s)

ST1137-A	73 Digital Multimeter or equivalent 105-R0051

Inspection and Verification

1. Verify the customer concern by operating the universal transmitter.
2. Visually inspect for obvious signs of mechanical damage of the universal transmitter.

Visual Inspection Chart

Mechanical
• Damaged universal transmitter • Damaged receiver

3. If an obvious cause for an observed or reported malfunction is found, correct the cause (if possible) before proceeding to the next step.
4. If the fault is not visually evident, verify the symptom and proceed to the Symptom Chart.

Symptom Chart

Symptom Chart

Condition	Possible Source	Action
• The Universal Transmitter Is Inoperative	• Universal transmitter. • Receiver unit.	• GO to Pinpoint Test A.

Officially Licensed Product
Ford Motor Company

Pinpoint Tests

PINPOINT TEST A: THE UNIVERSAL TRANSMITTER IS INOPERATIVE

TEST CONDITIONS	TEST DETAILS/RESULTS/ACTIONS
A1 CHECK LEFT VANITY MIRROR OPERATION	
	1 Check the illumination of the left vanity mirror lamps. • Do the left vanity mirror lamps illuminate? → **Yes** GO to **A2**. → **No** REFER to Section 417-02.

(Continued)

DIAGNOSIS AND TESTING (Continued)

PINPOINT TEST A: THE UNIVERSAL TRANSMITTER IS INOPERATIVE (Continued)

TEST CONDITIONS	TEST DETAILS/RESULTS/ACTIONS
A2 PROGRAM HAND-HELD TRANSMITTER INTO UNIVERSAL TRANSMITTER	
	1 **NOTE:** If the garage door is equipped with rolling codes, refer to Training a Garage Door Opener Equipped With "Rolling Codes." Program the universal transmitter; refer to Programming. • Did the universal transmitter program successfully? → **Yes** Universal transmitter is OK. VERIFY receiver operation. → **No** REPLACE the left sun visor assembly. TEST the system for normal operation.

GENERAL PROCEDURES

Official Licensed Issue
Ford Motor Company

Programming

WARNING: A GARAGE DOOR OPENING SYSTEM WHICH CANNOT STOP OR REVERSE ITSELF AFTER DETECTING AN OBJECT IN ITS PATH, DOES NOT MEET CURRENT FEDERAL SAFETY STANDARDS. TO DECREASE THE RISK OF SERIOUS INJURY OR DEATH, DO NOT USE THIS HOMELINK® TRANSMITTER WITH A DOOR OPENING SYSTEM THAT LACKS STOP AND REVERSE FEATURES AS REQUIRED BY FEDERAL STANDARDS. THIS INCLUDES ANY GARAGE DOOR OPENING SYSTEM MANUFACTURED BEFORE APRIL 1, 1982. FOR MORE INFORMATION CALL HOMELINK® CUSTOMER ASSISTANCE AT 1-800-355-3515.

1. **CAUTION: During this procedure, the system that you are programming will be made to operate. Make sure that people or objects are clear of the garage door or gate being programmed.**

   Verify the hand-held transmitter is operative.

GENERAL PROCEDURES (Continued)

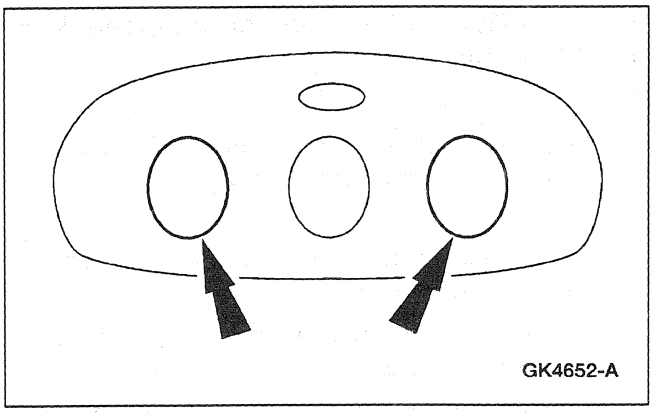

2. Hold down the two outside buttons on the universal transmitter until the red light begins to flash. Release both buttons.

3. Select one of the three universal transmitter channels to be programmed by depressing the desired button.

4. Hold the end of the hand-held transmitter against the front surface of the universal transmitter so that the red light can still be seen.

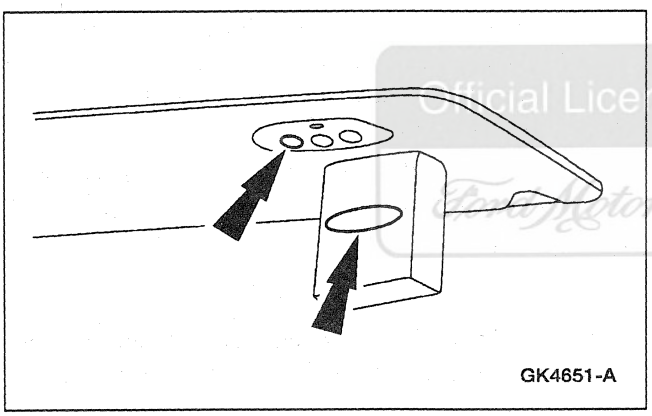

5. **NOTE:** During programming, the hand-held transmitter may automatically stop transmitting after two seconds, which may not be long enough to program the universal transmitter. If programming this type of hand-held transmitter, continue to hold the button on the universal transmitter while re-pressing the hand-held transmitter button every two seconds.

   Use both hands to press the hand-held transmitter button and the desired button on the universal transmitter. Do not release either button.

6. Hold down both buttons until the red light on the universal transmitter flashes, first slowly and then rapidly. Release both buttons when the rapid flashing begins. The universal transmitter has successfully learned the new frequency signal and can be used in place of the hand-held transmitter(s).

7. **NOTE:** If the hand-held transmitter appears to have programmed the universal transmitter but the universal still does not open the garage door, the garage door opener may have a ''code protected'' or ''rolling code'' feature.

   To operate, simply press the appropriate button on the universal transmitter. The red light is on while the signal is being transmitted.

GENERAL PROCEDURES (Continued)

Training a Garage Door Opener Equipped With "Rolling Codes"

1. Program the hand-held transmitter to the universal transmitter; refer to Programming.

2. Train the garage door opener receiver to recognize the universal transmitter.
   1 Remove the cover panel from the garage door opener receiver.
   2 Locate the training button on the garage door opener receiver. Location and color of the button may vary by garage door opener manufacturer. Refer to the garage door opener instruction manual or call 1-800-355-3515.
   3 Press the training button on the garage door opener receiver for 1-2 seconds.
   4 Depress the programmed universal transmitter button for the duration of the rapid flash of the universal transmitter red light (1-2 seconds). Release the button and re-press the button to confirm that the universal transmitter is trained to the receiver.
   5 The garage door opener should recognize the universal transmitter.

Official Licensed Product
Ford Motor Company

Erasing Channels

1. **NOTE:** Individual channels cannot be erased, but can be reprogrammed using the procedures for programming.

   To erase all three programmed channels, hold down the two outside buttons until the red light begins to flash. Release both buttons.

SECTION 419-08 Cellular Phone

VEHICLE APPLICATION: Mark VIII

SUBJECT **PAGE**

DESCRIPTION AND OPERATION
Cellular Phone 419-08-2
Programming 419-08-3
DIAGNOSIS AND TESTING
Cellular Phone 419-08-5
Inspection and Verification 419-08-5
CPM Active Command Index 419-08-7
CPM Diagnostic Trouble Code (DTC) Index 419-08-6
CPM Parameter Identification (PID) Index 419-08-6
Other Possible Concerns 419-08-6
System/Carrier Concerns 419-08-6
Pinpoint Tests 419-08-8
Symptom Chart 419-08-7
REMOVAL AND INSTALLATION
Transceiver — Portable Support Electronics (PSE) Module 419-08-33

Official Licensed Product
Ford Motor Company

DESCRIPTION AND OPERATION

Cellular Phone

Component Location

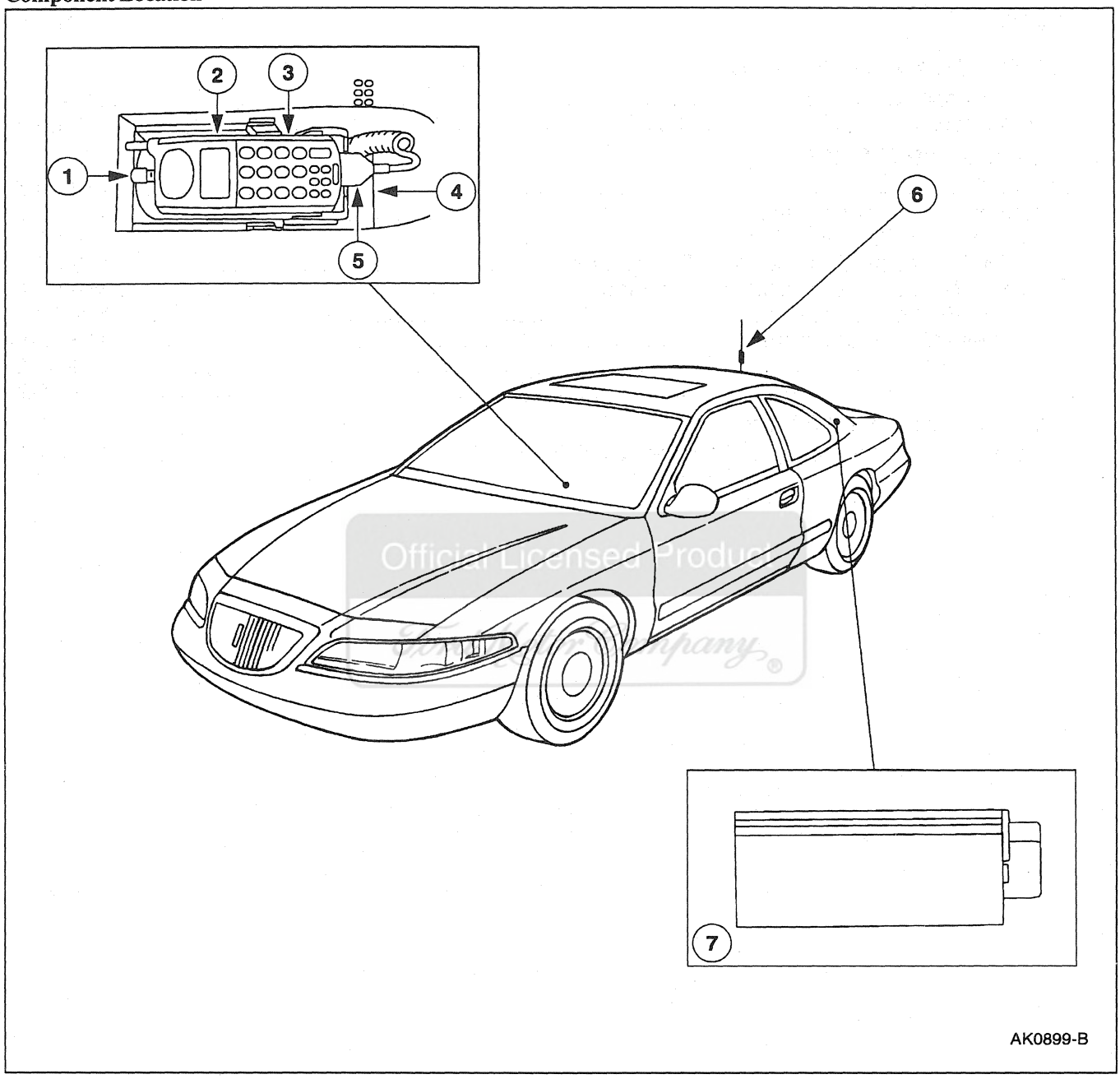

Item	Part Number	Description
1	19A463	Portable Convertible Phone Holder
2	19A383	Portable Convertible Phone
3	19G207	Battery

(Continued)

Item	Part Number	Description
4	19G201	Junction Box (Early Production)
5	19G206	Coil Cord

(Continued)

DESCRIPTION AND OPERATION (Continued)

Item	Part Number	Description
6	19A390	Portable Convertible Phone Antenna

Item	Part Number	Description
7	19K350	Portable Support Electronics

(Continued)

The portable convertible phone system consists of these major components:

- Front body pillar-mounted portable convertible phone microphone board with remote multi-function button.
- Portable convertible phone power cable.
- Glass-mounted portable convertible phone antenna.
- Multi-function control antenna cable.
- Portable support electronics.
- Radio feed wire.
- Portable convertible phone.
- Portable convertible phone holder.
- Coil cord.
- Portable convertible phone battery.
- Junction box (early production).

Programming

⚠ **CAUTION: To prevent damage to factory settings of portable support electronics, do not press any buttons other than the ones involved in the programming of the electronic serial number. If an incorrect button is accidentally pressed, press PWR to turn off the phone. Then begin the procedure again.**

NOTE: The portable convertible phone is equipped with a feature that allows the customer to maintain two different telephone numbers. Both numbers can be from separate carriers and are accessed separately in the phone.

NOTE: The phone number can be programmed up to 15 times. After that the phone number cannot be revised. Other programmed data can be revised indefinitely.

Program telephone numbers into the portable support electronics using the portable cellular phone as follows:

1. **NOTE:** The electronic serial number sticker is located on the back of the portable convertible phone near the bottom, under the battery.

   Obtain the electronic serial number.

   Basic programming procedures are as follows:

   1 Install the phone battery.
2. Turn the phone on.
3. **NOTE:** Once the customer enters a user security code you will need to use the user security code in place of the zeroes as follows: 0 + security code + security code, to enter the programming mode. (If the user security code is 123456, enter: FCN + 0123456123456 + RCL.)

   Press: FCN + 0 + 000 000 000 000 + RCL to enter programming mode.

   - To advance to the next step press <*.
   - To exit programming mode without changing any information press # while a programming step number (01, 02, etc.) is displayed.
   - To change the contents of the programming step back to the previously stored value, press CLR.
   - The Xs in the Programming the Portable Convertible Phone chart denote either 1s or 0s as required.
   - To program the phone with a second number enter 1XX110 instead of 1XX100 in step 10 in the Programming the Portable Convertible Phone chart, then press <* after step 11 in the Programming the Portable Convertible Phone chart to start the programming sequence for the second number.
4. Press <*. The portable convertible phone will display step 01. This is step 01 on the Programming the Portable Convertible Phone chart.

Official Licensed Product
Ford Motor Company

DESCRIPTION AND OPERATION (Continued)

5. Press <*. The portable convertible phone will display the contents of step 01; the five-digit system identification number will be displayed. Enter the system identification number.
6. Continue editing the information, following the programming steps listed in the Programming the Portable Convertible Phone chart.
   - In step 07 in the Programming the Portable Convertible Phone chart of the programming, the six-digit user security code is programmed into the phone. The user security code is used to access certain call restrictions and advanced security functions. Refer to the User's Manual for further information.
7. After all the information has been entered, press <* to go through all the entries to verify the information entered. If all the information is correct, press <* until a step number is displayed (01, 02, etc.) and press SEND. The portable convertible phone will power-down then power-up to indicate that the programming is complete.
8. Verify that the information was stored by pressing RCL + #>, the telephone number just programmed should be displayed.

Programming The Portable Convertible Phone

Step	Description	Standard Default (First Phone Number)	Standard Default (Second Phone Number)
01	System I.D. number	00000	00000
02	Cellular area code	111	111
03	Cellular phone number	1110111	1110111
04	Station class mark	00	00
05	Access overload class	00	00

(Continued)

Programming The Portable Convertible Phone

Step	Description	Standard Default (First Phone Number)	Standard Default (Second Phone Number)
06	Group I.D. mark	00	00
07	User security code	000000	000000
08	Unlock code	123	123
09	Initial paging channel (usually 0333 for 'A' system or 0334 for 'B' system)	0XXX	0XXX
10	OPTION PROGRAMMING for FORD portable convertible phone set to: 1XX100 (replace the X's by 1 or 0 depending on the requirements from the local service provider/carrier)	0XX100 (0XX110, if a second phone number is desired)	XXX000
	Internal speaker disable bit (set to 0 for FORD)	1	1
	Local Use 1 = enable	X	X
	Local Use 0 = disable		
	MIN MARK 1 = enable	X	X
	MIN MARK 0 = disable		
	Auto recall (always 1) last two least significant digits set to 0 for FORD	1 0	0 0
11	OPTION PROGRAMMING For FORD portable convertible phone set to 01110	0 XXXX	0 XXXX

Official Licensed Ford Motor Company

DIAGNOSIS AND TESTING

Cellular Phone

Refer to Electrical and Vacuum Troubleshooting Manual, Cell 135, Cellular Telephone for schematic and connector information.

Special Tool(s)

ST1137-A	73 Digital Multimeter or equivalent 105-R0051
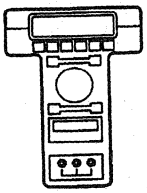 ST1217-A	New Generation Star (NGS) Tester or equivalent 418-F048 (007-00500)

Inspection and Verification

If there is a concern making calls on the portable convertible phone while connected to the vehicle, check the following information first:

1. Make sure the portable convertible phone is turned ON. With the power button on, the system should be on while the ignition switch is in ACC or RUN.
2. Make sure the customer is calling within the coverage area. NO SVC will appear in the display if the customer is calling from outside the coverage area.
3. Check to see if the ROAM indicator is on. If so, follow the roaming instructions in the operating guide.
4. Make sure the display does not read LOC'D. If it does, the phone must be unlocked by pressing clear, and using the customer three-digit code.
5. Make sure the portable convertible phone is securely connected to the coil cord and seated in the holder.
6. Check the portable convertible phone antenna and portable support electronics connections at the portable support electronics, located under the luggage compartment package tray.
7. Check the coil cord connectors in the console.
8. Check the portable convertible phone system registration. Also check to make sure that the portable convertible phone is properly programmed. Incorrect programming can result in single system scanning, loss of speed dialing, loss of hands-free audio, loss of auto redial, loss of dial tone multi-frequency tones, and the loss of other keypad/portable cellular phone functions.
9. Check the customer account status with the cellular carrier.

If the customer concern is still present follow these steps to diagnose concern:

10. Verify customer concern by operating the portable convertible phone system to duplicate the condition.
11. Inspect to determine if one of the following mechanical or electrical concerns apply:

Visual Inspection Chart

Mechanical	Electrical
• Portable convertible phone • Microphone • Portable support electronics • Portable convertible phone holder	• Fuse Junction Panel Fuse 4 (10A), 2 (10A) • Damaged connectors • Corroded connectors

12. If inspection reveals obvious concerns which can be readily identified, repair as required.
13. **NOTE:** The New Generation Star (NGS) tester displays cellular phone module (CPM) in place of portable support electronics module.

    If the concern remains after inspection, connect New Generation Star (NGS) Tester to the data link connector (DLC) located beneath the instrument panel to perform DATA LINK DIAGNOSTIC TEST; refer to Section 418-00. If the New Generation Star (NGS) Tester responds with NO RESPONSE/NOT EQUIPPED for cellular phone module (CPM), go to Pinpoint Test C. If the DATA LINK DIAGNOSTIC TEST is passed for the CPM, retrieve continuous diagnostic trouble codes (DTCs) and execute Self-Test Diagnostics for cellular phone module (CPM); refer to Section 418-00.
14. If the self test is passed and no diagnostic trouble codes (DTCs) are retrieved, proceed to Symptom Chart to continue diagnostics.

Official Licensed Product Ford Motor Company

DIAGNOSIS AND TESTING (Continued)

15. If diagnostic trouble codes (DTCs) are retrieved, go to the CPM Diagnostic Trouble Code (DTC) Index to continue diagnostics.
16. If the CPM cannot be accessed by the New Generation Star (NGS) tester, go to Pinpoint Test C.

System/Carrier Concerns

Dropped calls, bad connections, noisy audio and other intermittent symptoms usually indicate a system or cellular carrier concern, and are not the fault of the phone itself. Such symptoms may occur in situations such as the following:

- In certain geographic areas (for example excessive foliage, hills) or at the edge of coverage areas.
- At the same place each day.
- At the same time each day.
- Under bridges, tunnels, in lower freeways and in congested downtown areas.

If the customer phone exhibits any of the above symptoms or symptoms occur under the above conditions, the customer and/or the dealer should contact customer assistance at their particular cellular coverage provider/carrier or call the 1-800 assistance number provided in the Ford Cellular System Dealer kit.

Before advising customer to purchase a booster kit, make sure Pinpoint Test G has been performed.

Other Possible Concerns

1. If, for some reason, the customer electronic serial number was incorrectly recorded in the carrier switch, the phone will not work. Call the 1-800 number in your dealer kit to check the electronic serial number.
2. A customer's initial call must be made in his/her home coverage area for proper activation of the Ford Cellular System.
3. A customer must wait until after 24 hours of the coverage activation before making a call from outside of his/her home coverage area or the phone might be reported stolen and coverage stopped.
4. There may be a slight delay in activation after leaving dealership from initial delivery.

If, after checking these possibilities, the phone still does not function, do not attempt to repair the phone. Call the cellular distributor Audiotronics at 1-800-755-4161.

CPM Diagnostic Trouble Code (DTC) Index

CPM Diagnostic Trouble Code (DTC) Index

DTC	Description	DTC Caused By	Action
B1342	ECU Defective	CPM	GO to Pinpoint Test A.
B1844	Phone Handset Circuit Failure	CPM	GO to Pinpoint Test B.
U1135	SCP Invalid or Missing Data for Ignition Switch / Starter	SCIL	PERFORM the SCIL Self-Test.
U1235	SCP Invalid or Missing Data for Displays	MC	REFER to Section 413-08.

CPM Parameter Identification (PID) Index

CPM Parameter Identification (PID) Index

PID	Description	Expected Values
CCNT__CP	Number of Continuous DTCs in Module	one count per bit
SIG__STR	Cellular Network Signal Strength	0-100%
NUM__PAD	Cellular Phone Handset Input (0-9)	buttons 0-9

(Continued)

CPM Parameter Identification (PID) Index

PID	Description	Expected Values
FNC__PAD	Cellular Phone Handset Input (Func. Keys)	#, FUNC, STORE, RCL, END, SEND *, CLR, VOL+, VOL-
IGN__CP	Ignition Switch	START, RUN, OFF, ACCSSY

DIAGNOSIS AND TESTING (Continued)

CPM Active Command Index

CPM Active Command Index

Active Command	Display	Action
PID LATCH	PID LATCH	ON, OFF
PHONE IN USE	PHONE ST	ON, OFF

Symptom Chart

Symptom Chart

Condition	Possible Source	Action
• No Communication With the Cellular Phone Module	• Portable support electronics. • Circuitry.	• GO to Pinpoint Test C.
• Phone Does Not Power Up	• Portable support electronics. • Portable convertible phone. • Circuitry.	• GO to Pinpoint Test D.
• Reduced Sound or No Sound Through the Speakers	• Portable support electronics. • Portable convertible phone. • Microphone. • Amplifier. • Circuitry.	• GO to Pinpoint Test E.
• The Phone System Will Not Go Into Hands-Free Mode	• Portable support electronics. • Portable convertible phone. • Microphone. • Circuitry.	• GO to Pinpoint Test F.
• Poor Reception, Static On Calls, Frequent Drop of Calls	• Portable support electronics. • Portable convertible phone. • Microphone. • Antenna. • Circuitry.	• GO to Pinpoint Test G.
• The Cellular Phone Microphone Is Not Operating Properly	• Portable support electronics. • Portable convertible phone. • Microphone. • Circuitry.	• GO to Pinpoint Test H.
• NO SVC Display Stays On	• Portable support electronics. • Portable convertible phone. • Circuitry.	• GO to Pinpoint Test J.
• Cannot Enter the Programming Mode	• Portable support electronics. • Portable convertible phone. • Circuitry.	• GO to Pinpoint Test K.
• The Voice Activated PHONE Functions Inoperative	• Portable support electronics. • Portable convertible phone. • Microphone. • Circuitry.	• GO to Pinpoint Test L.
• The Radio Display Does Not Display PHONE — No Phone Information Displayed On the Radio	• Portable support electronics. • Portable convertible phone. • Message center. • Circuitry.	• GO to Pinpoint Test M.

Ford Motor Company Proprietary

DIAGNOSIS AND TESTING (Continued)

Pinpoint Tests

PINPOINT TEST A: DTC B1342: ECU DEFECTIVE

TEST CONDITIONS	TEST DETAILS/RESULTS/ACTIONS
A1 REPEAT SELF-TEST	
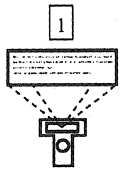 1 Clear CPM DTCs 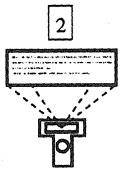 2 CPM Self-Test	• Is DTC B1342 retrieved? → **Yes** REPLACE the portable support electronics. TEST the system for normal operation. → **No** REPAIR any remaining DTCs. REFER to the CPM Diagnostic Trouble Code (DTC) Index.

PINPOINT TEST B: DTC B1844: PHONE HANDSET CIRCUIT FAILURE

TEST CONDITIONS	TEST DETAILS/RESULTS/ACTIONS
B1 CHECK THE PID NUM__PAD	
 1 2 CPM PID NUM__PAD	3 Press each number button on the portable convertible phone one at a time while monitoring the PID NUM__PAD. • Does the PID NUM__PAD read each number button as the button is pressed? → **Yes** GO to **B2**. → **No** REPLACE the portable convertible phone. TEST the system for normal operation.

(Continued)

Official Licensed Product Ford Motor Company

DIAGNOSIS AND TESTING (Continued)

PINPOINT TEST B: DTC B1844: PHONE HANDSET CIRCUIT FAILURE (Continued)

TEST CONDITIONS	TEST DETAILS/RESULTS/ACTIONS
B2 CHECK THE PID FNC__PAD	
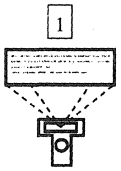 CPM PID FNC__PAD	2 Press each function button one at a time while monitoring the PID FNC__PAD. • Does the PID FNC__PAD read each function button as the button is pressed? → **Yes** GO to **B3**. → **No** REPLACE the portable convertible phone. TEST the system for normal operation.
B3 CHECK THE PORTABLE SUPPORT ELECTRONICS (PSE) MODULE	
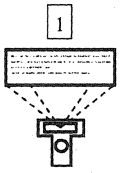 CPM DTCs CPM Self-Test	• Is DTC B1844 retrieved? → **Yes** REPLACE the PSE module. TEST the system for normal operation. → **No** The system is operating properly at this time.

Official Licensed Product Motor Company

DIAGNOSIS AND TESTING (Continued)

PINPOINT TEST C: NO COMMUNICATION WITH THE CELLULAR PHONE MODULE

TEST CONDITIONS	TEST DETAILS/RESULTS/ACTIONS
C1 CHECK THE RADIO OPERATION	
1 	2 Turn the radio ON. • Does the radio operate? → **Yes** GO to **C6**. → **No** GO to **C2**.
C2 CHECK FUSE JUNCTION PANEL FUSE 2 (10A)	
1 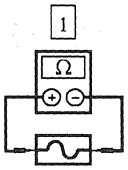 Fuse Junction Panel Fuse 2 (10A)	• Is the fuse OK? → **Yes** REPAIR circuit 729 (R/W). TEST the system for normal operation. → **No** GO to **C3**.

Official Licensed Product
Ford Motor Company

(Continued)

DIAGNOSIS AND TESTING (Continued)

PINPOINT TEST C: NO COMMUNICATION WITH THE CELLULAR PHONE MODULE (Continued)

TEST CONDITIONS	TEST DETAILS/RESULTS/ACTIONS
C3 CHECK CIRCUIT 729 (R/W) FOR A SHORT TO GROUND	
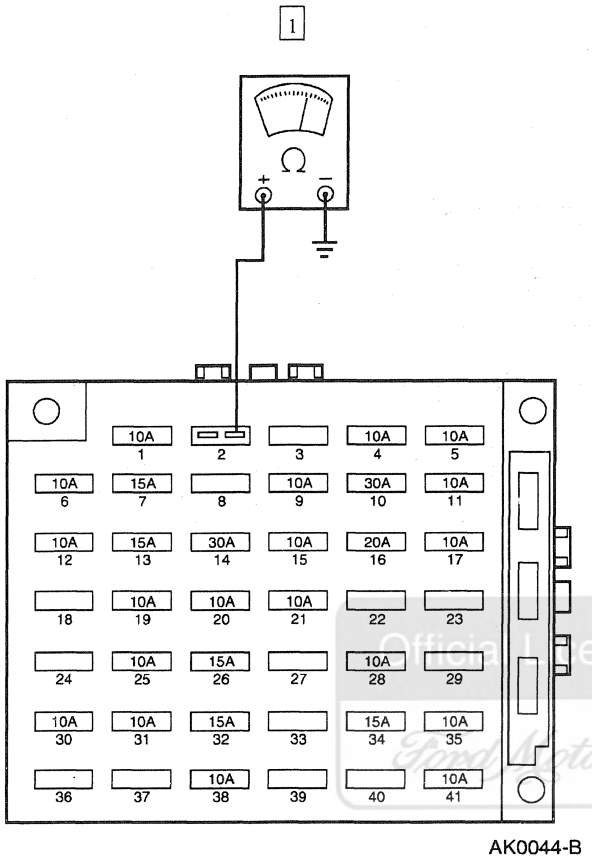 AK0044-B	1 Measure the resistance between fuse junction panel fuse 2 output cavity, circuit 729 (R/W), and ground. • Is the resistance greater than 10,000 ohms? → **Yes** REPLACE fuse junction panel fuse 2 (10A). TEST the system for normal operation. → **No** GO to **C4**.

Official Licensed Product Ford Motor Company

(Continued)

DIAGNOSIS AND TESTING (Continued)

PINPOINT TEST C: NO COMMUNICATION WITH THE CELLULAR PHONE MODULE (Continued)

TEST CONDITIONS	TEST DETAILS/RESULTS/ACTIONS
C4 CHECK THE RADIO FOR SHORT	
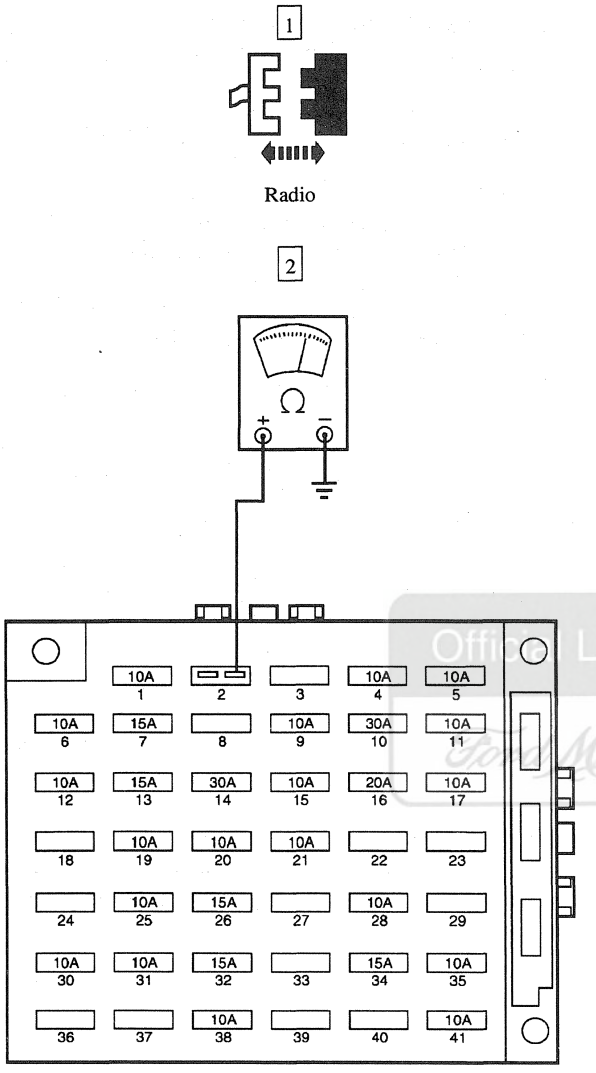	2 Measure the resistance between fuse junction panel fuse 2 output cavity, circuit 729 (R/W), and ground. • Is the resistance greater than 10,000 ohms? → **Yes** REMOVE the radio chassis and SEND it to an authorized Ford audio system repair facility. TEST the system for normal operation. → **No** GO to **C5**.

Official Licensed Product Ford Motor Company

(Continued)

DIAGNOSIS AND TESTING (Continued)

PINPOINT TEST C: NO COMMUNICATION WITH THE CELLULAR PHONE MODULE (Continued)

TEST CONDITIONS	TEST DETAILS/RESULTS/ACTIONS
C5 CHECK THE PSE FOR SHORT	
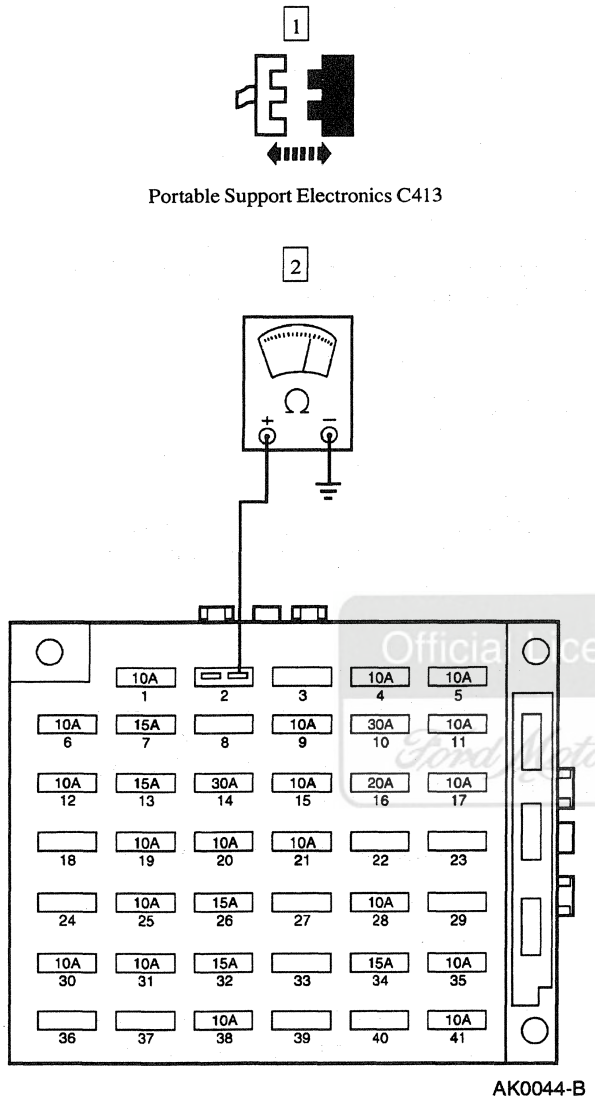	2 Measure the resistance between fuse junction panel fuse 2 output cavity, circuit 729 (R/W), and ground. • Is the resistance greater than 10,000 ohms? → **Yes** REPLACE the portable support electronics. TEST the system for normal operation. → **No** REPAIR circuit 729 (R/W) for a short to ground. TEST the system for normal operation.

Official Licensed Product Ford Motor Company

(Continued)

DIAGNOSIS AND TESTING (Continued)

PINPOINT TEST C: NO COMMUNICATION WITH THE CELLULAR PHONE MODULE (Continued)

TEST CONDITIONS	TEST DETAILS/RESULTS/ACTIONS
C6 CHECK CIRCUIT 729 (R/W) FOR AN OPEN	
1 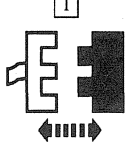 PSE C413 2 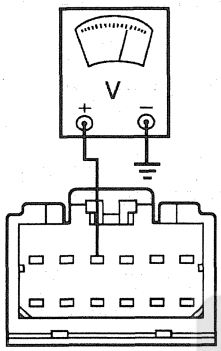 AK0057-B	2 Measure the voltage between PSE C413-3, circuit 729 (R/W), and ground. • Is the voltage greater than 10 volts? → **Yes** GO to **C7**. → **No** REPAIR circuit 729 (R/W) for an open. TEST the system for normal operation.
C7 CHECK THE SUPPLY VOLTAGE	
1 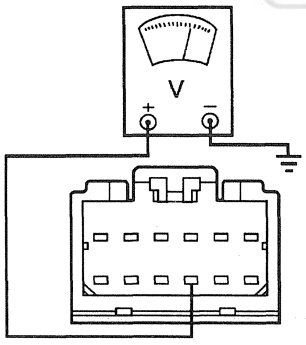 AK0842-B	1 Measure the voltage between PSE C413-10, circuit 729 (R/W), and ground. • Is the voltage greater than 10 volts? → **Yes** GO to **C8**. → **No** REPAIR circuit 729 (R/W) for an open. TEST the system for normal operation.

Official Licensed Product
Ford Motor Company

(Continued)

DIAGNOSIS AND TESTING (Continued)

PINPOINT TEST C: NO COMMUNICATION WITH THE CELLULAR PHONE MODULE (Continued)

TEST CONDITIONS	TEST DETAILS/RESULTS/ACTIONS
C8 CHECK FOR IGNITION SUPPLY	
1 2 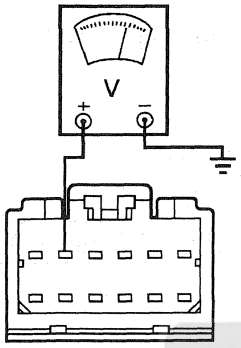 AK0843-B	2 Measure the voltage between PSE C413-2, circuit 1002 (BK/PK), and ground. • Is the voltage greater than 10 volts? → **Yes** GO to **C9**. → **No** REPAIR circuit 1002 (BK/PK) for an open. TEST the system for normal operation.
C9 CHECK CIRCUIT 694 (BK/LG) FOR AN OPEN	
1 2 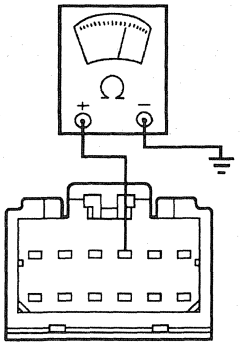 AK0844-B	2 Measure the resistance between PSE C413-4, circuit 694 (BK/LG), and ground. • Is the resistance less than 5 ohms? → **Yes** GO to **C10**. → **No** REPAIR circuit 694 (BK/LG) for an open. TEST the system for normal operation.

Ford Motor Company

(Continued)

DIAGNOSIS AND TESTING (Continued)

PINPOINT TEST C: NO COMMUNICATION WITH THE CELLULAR PHONE MODULE (Continued)

TEST CONDITIONS	TEST DETAILS/RESULTS/ACTIONS
C10 CHECK THE GROUND CIRCUIT	
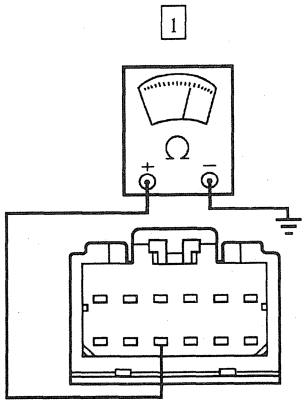 AK0845-B	1 Measure the resistance between PSE C413-9, circuit 694 (BK/LG), and ground. • Is the resistance greater than 10,000 ohms? → **Yes** REPAIR circuit 694 (BK/LG). TEST the system for normal operation. → **No** REFER to Section 418-00.

PINPOINT TEST D: PHONE DOES NOT POWER UP

TEST CONDITIONS	TEST DETAILS/RESULTS/ACTIONS
D1 CHECK THE PORTABLE CELLULAR PHONE	
	1 Disconnect the portable convertible phone from the vehicle. • Does the portable convertible phone power up in cellular mode? → **Yes** GO to **D3**. → **No** GO to **D2**.
D2 CHECK THE BATTERY	
	1 Install a known good, charged battery on the portable cellular phone. • Does the portable convertible phone power up in cellular mode? → **Yes** REPLACE the portable convertible phone battery. TEST the system for normal operation. → **No** CALL Audiotronics 1-800-755-4161, to REPAIR the portable convertible phone.

Official Licensed Product Ford Motor Company

(Continued)

DIAGNOSIS AND TESTING (Continued)

PINPOINT TEST D: PHONE DOES NOT POWER UP (Continued)

TEST CONDITIONS	TEST DETAILS/RESULTS/ACTIONS
D3 CHECK THE CONNECTIONS	
	1 Inspect the coil cord connections and the portable support electronics connections. • Are the connections clean and tight? → **Yes** GO to **D4**. → **No** REPAIR as required. TEST the system for normal operation.
D4 CHECK FOR IGNITION SUPPLY	
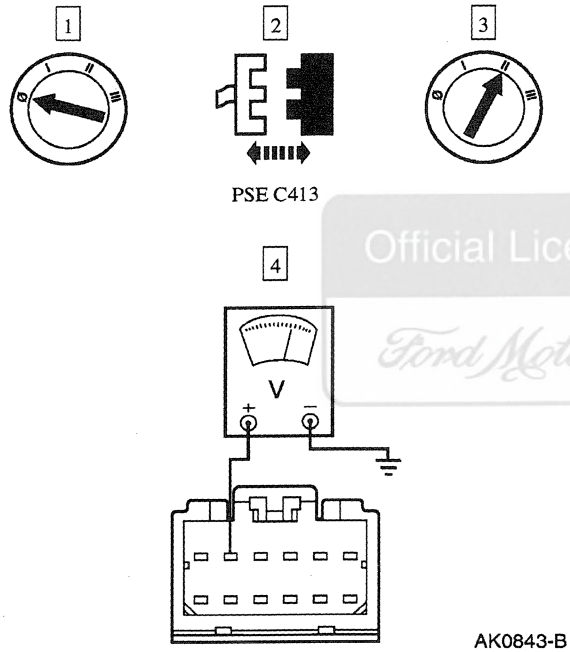	4 Measure the voltage between PSE C413-2, circuit 1002 (BK/PK), and ground. • Is the voltage greater than 10 volts? → **Yes** GO to **D6**. → **No** GO to **D5**.

Official Licensed Product
Ford Motor Company®

(Continued)

DIAGNOSIS AND TESTING (Continued)

PINPOINT TEST D: PHONE DOES NOT POWER UP (Continued)

TEST CONDITIONS	TEST DETAILS/RESULTS/ACTIONS
D5 CHECK FUSE JUNCTION PANEL FUSE 4 (10A)	
1 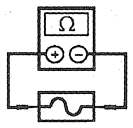 Fuse Junction Panel Fuse 4 (10A)	• Is the fuse OK? → **Yes** REPAIR circuit 1002 (BK/PK) for an open. TEST the system for normal operation. → **No** REPAIR circuit 1002 (BK/PK) for a short. TEST the system for normal operation.
D6 CHECK FOR BATTERY SUPPLY	
1 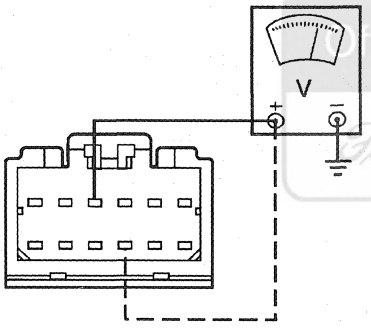 AK1268-A	1 Measure the voltage between PSE C413-3, circuit 729 (R/W), and ground; portable support electronics C413-10, circuit 729 (R/W), and ground. • Are both of the readings greater than 10 volts? → **Yes** GO to **D7**. → **No** REPAIR circuit 729 (R/W) for an open. TEST the system for normal operation.
D7 CHECK THE SYSTEM GROUND	
1 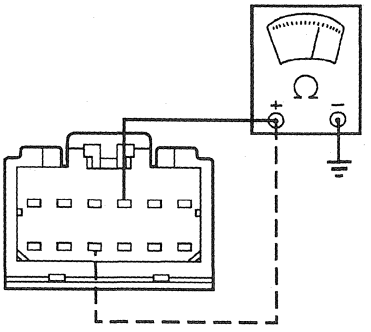 AK1269-A	1 Measure the resistance between PSE C413-4, circuit 694 (BK/LG), and ground; and between the PSE C413-9, circuit 694 (BK/LG), and ground. • Is the resistance greater than 10,000 ohms? → **Yes** REPAIR circuit 694 (BK/LG) for an open. TEST the system for normal operation. → **No** GO to **D8**.

(Continued)

Official Licensed Product Ford Motor Company

DIAGNOSIS AND TESTING (Continued)

PINPOINT TEST D: PHONE DOES NOT POWER UP (Continued)

TEST CONDITIONS	TEST DETAILS/RESULTS/ACTIONS
D8 CHECK THE PORTABLE CELLULAR PHONE	
	1 Substitute a known good portable convertible phone. • Does the system power up? → **Yes** REPLACE the portable convertible phone. TEST the system for normal operation. → **No** GO to **D9**.
D9 CHECK THE PORTABLE SUPPORT ELECTRONICS	
	1 Substitute a known good portable support electronics. • Does the system power up? → **Yes** REPLACE the portable support electronics. TEST the system for normal operation. → **No** REPLACE the radio amplifier wiring. TEST the system for normal operation.

Official Licensed Product
Ford Motor Company

PINPOINT TEST E: REDUCED SOUND OR NO SOUND THROUGH THE SPEAKERS

TEST CONDITIONS	TEST DETAILS/RESULTS/ACTIONS
E1 CHECK HANDS-FREE MODE	
	1 Place the portable convertible phone in the hands-free mode. • Does the portable convertible phone operate in the hands-free mode? → **Yes** GO to **E2**. → **No** GO to Pinpoint Test F.

(Continued)

DIAGNOSIS AND TESTING (Continued)

PINPOINT TEST E: REDUCED SOUND OR NO SOUND THROUGH THE SPEAKERS (Continued)

TEST CONDITIONS	TEST DETAILS/RESULTS/ACTIONS
E2 CHECK RADIO SPEAKERS	
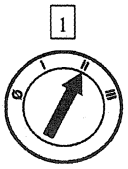	2 Turn the radio ON and tune to a known good station. • Do the radio speakers operate properly? → **Yes** GO to **E3**. → **No** REFER to Section 415-00.
E3 CHECK CIRCUITS 722 (P/Y), 723 (GY/R), 724 (LB/Y), 725 (PK)	
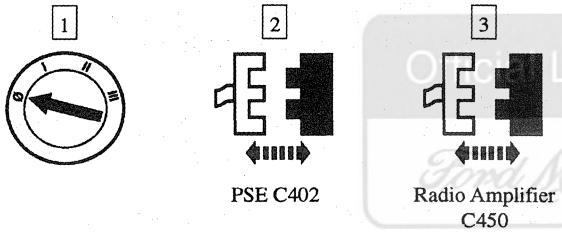 PSE C402 Radio Amplifier C450	4 Measure the resistance between PSE C402 and radio amplifier C450; and between PSE C402 and ground as follows: **Circuit** / **Radio Amplifier C450 Pin** / **PSE C402 Pin** 722 (P/Y) — 7 — 2 723 (GY/R) — 3 — 5 724 (LB/Y) — 8 — 11 725 (PK) — 4 — 10 • Are the resistances less than 5 ohms between PSE C402 and radio amplifier C450; and greater than 10,000 ohms between PSE C402 and ground? → **Yes** GO to **E4**. → **No** REPLACE the radio amplifier wiring. TEST the system for normal operation.

Official Licensed Product Ford Motor Company

(Continued)

DIAGNOSIS AND TESTING (Continued)

PINPOINT TEST E: REDUCED SOUND OR NO SOUND THROUGH THE SPEAKERS (Continued)

TEST CONDITIONS	TEST DETAILS/RESULTS/ACTIONS
E4 CHECK PSE	
	1 Substitute the PSE with a known good unit. 3 Turn the radio ON and tune to a known good station. • Do the radio speakers operate properly? → **Yes** REPLACE the PSE. TEST the system for normal operation. → **No** REPLACE the radio amplifier. TEST the system for normal operation.

Official Licensed Product Ford Motor Company

PINPOINT TEST F: THE PHONE SYSTEM WILL NOT GO INTO HANDS-FREE MODE

TEST CONDITIONS	TEST DETAILS/RESULTS/ACTIONS
F1 CHECK THE CONNECTIONS	
	1 Check the portable convertible phone coil cord and the console junction box connections. • Are the connections clean and tight? → **Yes** GO to **F2**. → **No** REPAIR as required. TEST the system for normal operation.

(Continued)

DIAGNOSIS AND TESTING (Continued)

PINPOINT TEST F: THE PHONE SYSTEM WILL NOT GO INTO HANDS-FREE MODE (Continued)

TEST CONDITIONS	TEST DETAILS/RESULTS/ACTIONS
F2 CHECK CIRCUIT 740 (Y/LG)	
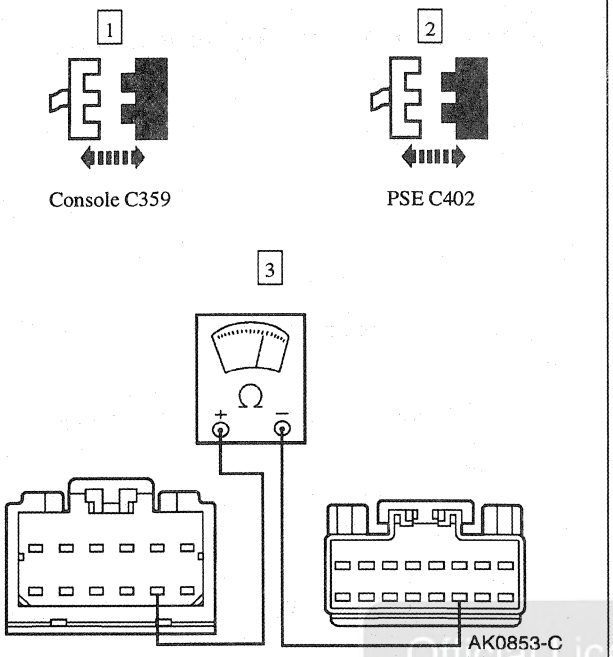	3 Measure the resistance between PSE C402-14 and console C359-11, circuit 740 (Y/LG). • Is the resistance less than 5 ohms? → **Yes** GO to **F3**. → **No** REPLACE the radio amplifier wiring. TEST the system for normal operation.
F3 CHECK THE PORTABLE CELLULAR PHONE HOLDER	
	1 Substitute the portable convertible phone holder with a known good holder. • Is the system OK? → **Yes** REPLACE the portable convertible phone holder. TEST the system for normal operation. → **No** GO to **F4**.
F4 CHECK THE PORTABLE CELLULAR PHONE	
	1 Substitute a known good portable convertible phone. • Is the system OK? → **Yes** REPLACE the portable convertible phone. TEST the system for normal operation. → **No** REPLACE the PSE. TEST the system for normal operation.

Official Licensed Product
Ford Motor Company

DIAGNOSIS AND TESTING (Continued)

PINPOINT TEST G: POOR RECEPTION, STATIC ON CALLS, FREQUENT DROP OF CALLS

TEST CONDITIONS	TEST DETAILS/RESULTS/ACTIONS
G1 CHECK THE ANTENNA CONNECTIONS	
	1 Inspect the antenna connections at the back window, console coaxial cable connection and coil cord connection. • Are the connections OK? → **Yes** GO to **G2**. → **No** REPAIR as required. TEST the system for normal operation.
G2 CHECK THE ANTENNA BASES	
NOTE: Antenna bases are designed to be mounted only once. If a base is damaged or removed, or the mounting adhesive has been damaged, the base must be replaced. Inside and outside bases must be matched up extremely close.	
	1 Inspect the portable convertible phone antenna bases for misalignment or loose mounting to glass. • Are the bases OK? → **Yes** GO to **G3**. → **No** REPLACE the portable convertible phone antenna bases as required. TEST the system for normal operation.
G3 CHECK THE INSIDE BASE CONNECTOR	
NOTE: Antenna bases are designed to be mounted only once. If a base is damaged or removed, or the mounting adhesive has been damaged, the base must be replaced. Inside and outside bases must be matched up extremely close.	
	1 Check the antenna connector on the inside base of the portable convertible phone antenna. • Is the connector or base loose? → **Yes** REPLACE the portable convertible phone inside antenna base. TEST the system for normal operation. → **No** GO to **G4**.

(Continued)

Official Licensed Product
Ford Motor Company

DIAGNOSIS AND TESTING (Continued)

PINPOINT TEST G: POOR RECEPTION, STATIC ON CALLS, FREQUENT DROP OF CALLS (Continued)

TEST CONDITIONS	TEST DETAILS/RESULTS/ACTIONS
G4 CHECK THE COIL CORD	
	[1] Substitute a known good coil cord. • Is the system OK? → **Yes** REPLACE the coil cord. TEST the system for normal operation. → **No** GO to **G5**.
G5 CHECK THE PORTABLE CONVERTIBLE PHONE	
	[1] Substitute a known good portable convertible phone. • Is the system OK? → **Yes** REPLACE the portable convertible phone. TEST the system for normal operation. → **No** Early production vehicles with a console junction box, GO to **G6**. Late production vehicles without a console junction box, GO to **G7**.
G6 CHECK THE CONSOLE JUNCTION BOX (EARLY PRODUCTION)	
	[1] Substitute a known good cellular phone junction box. • Is the system OK? → **Yes** REPLACE the cellular phone junction box. TEST the system for normal operation. → **No** GO to **G7**.

(Continued)

Official Licensed Product
Ford Motor Company

DIAGNOSIS AND TESTING (Continued)

PINPOINT TEST G: POOR RECEPTION, STATIC ON CALLS, FREQUENT DROP OF CALLS (Continued)

TEST CONDITIONS	TEST DETAILS/RESULTS/ACTIONS
G7 CHECK THE ANTENNA CABLE	
	1 Substitute a known good antenna cable. • Is the system OK? → **Yes** REPLACE the radio amplifier wiring. TEST the system for normal operation. → **No** GO to **G8**.
G8 CHECK THE BASE ALIGNMENT	
NOTE: Antenna bases are designed to be mounted only once. If a base is damaged or removed, or the mounting adhesive has been damaged, the base must be replaced. Inside and outside bases must be matched up extremely close.	
	1 Check the antenna base alignment. • Are the interior and the exterior bases aligned? → **Yes** INFORM the customer that a booster kit may be required due to poor cellular coverage in the geographical area where the phone is being used. A booster kit can be purchased by calling 1-800-755-4161. → **No** REPLACE the portable convertible phone antenna bases as required and TEST the system for normal operation.

Official Licensed Product
Ford Motor Company

PINPOINT TEST H: THE CELLULAR PHONE MICROPHONE IS NOT OPERATING PROPERLY

TEST CONDITIONS	TEST DETAILS/RESULTS/ACTIONS
H1 CHECK THE MICROPHONE CONNECTION	
	1 Inspect the microphone connection. • Is the connection clean and tight? → **Yes** GO to **H2**. → **No** REPAIR as required. TEST the system for normal operation.

(Continued)

DIAGNOSIS AND TESTING (Continued)

PINPOINT TEST H: THE CELLULAR PHONE MICROPHONE IS NOT OPERATING PROPERLY (Continued)

TEST CONDITIONS	TEST DETAILS/RESULTS/ACTIONS
H2 CHECK CIRCUIT 714 (P) FOR SHORT	
1 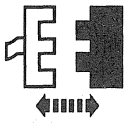 PSE 2 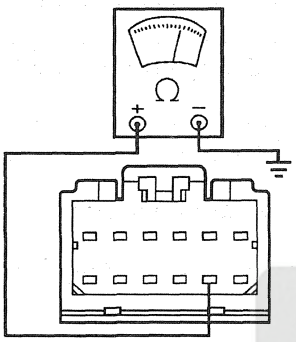 AK0855-B	2 Measure the resistance between portable support electronics (PSE) C413-11, circuit 714 (P), and ground. • Is the resistance greater than 10,000 ohms? → **Yes** GO to **H3**. → **No** REPLACE the radio amplifier wiring. TEST the system for normal operation.
H3 CHECK CIRCUIT 728 (W/O) FOR SHORT	
1 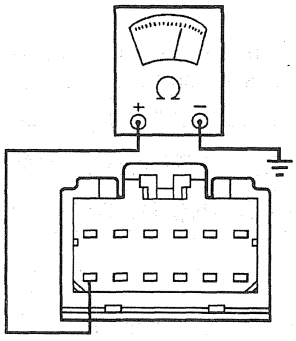 AK0856-B	1 Measure the resistance between PSE C413-7, circuit 728 (W/O), and ground. • Is the resistance greater than 10,000 ohms? → **Yes** GO to **H4**. → **No** REPLACE the radio amplifier wiring. TEST the system for normal operation.

Official Licensed Product
Ford Motor Company

(Continued)

DIAGNOSIS AND TESTING (Continued)

PINPOINT TEST H: THE CELLULAR PHONE MICROPHONE IS NOT OPERATING PROPERLY (Continued)

TEST CONDITIONS	TEST DETAILS/RESULTS/ACTIONS
H4 CHECK CIRCUIT 714 (P) FOR AN OPEN	
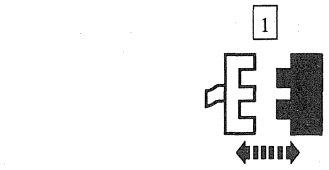 Microphone C414 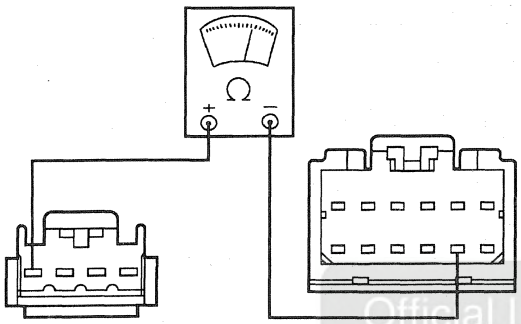 AK0858-B	2 Measure the resistance between PSE C413-11 and the microphone C414-1, circuit 714 (P). • Is the resistance less than 5 ohms? → **Yes** GO to **H5**. → **No** REPLACE the radio amplifier wiring. TEST the system for normal operation.
H5 CHECK CIRCUIT 728 (W/O) FOR AN OPEN	
1 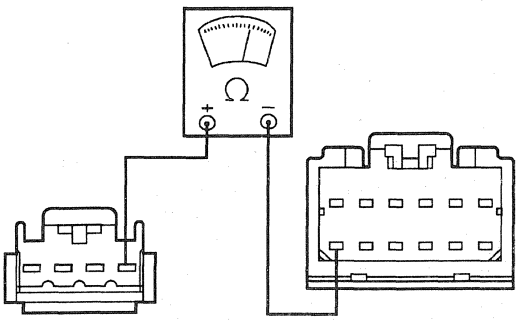 AK0859-B	1 Measure the resistance between the PSE C413-7 and the microphone C414-4, circuit 728 (W/O). • Is the resistance less than 5 ohms? → **Yes** GO to **H6**. → **No** REPLACE the radio amplifier wiring. TEST the system for normal operation.

Official Licensed Product Ford Motor Company

(Continued)

DIAGNOSIS AND TESTING (Continued)

PINPOINT TEST H: THE CELLULAR PHONE MICROPHONE IS NOT OPERATING PROPERLY (Continued)

TEST CONDITIONS	TEST DETAILS/RESULTS/ACTIONS
H6 SUBSTITUTE A KNOWN GOOD MICROPHONE	
	1 Substitute the microphone with a known good microphone. • Is the system OK? → **Yes** REPLACE the microphone. TEST the system for normal operation. → **No** GO to **H7**.
H7 CHECK THE PSE	
	1 Substitute the PSE with a known good unit. • Is the system OK? → **Yes** REPLACE the PSE. TEST the system for normal operation. → **No** GO to **H8**.
H8 CHECK THE PORTABLE CONVERTIBLE PHONE	
	1 Substitute a known good portable convertible phone. • Is the system OK? → **Yes** REPLACE the portable convertible phone. TEST the system for normal operation. → **No** REPLACE the radio amplifier wiring. TEST the system for normal operation.

Official Licensed Product

DIAGNOSIS AND TESTING (Continued)

PINPOINT TEST J: NO SVC DISPLAY STAYS ON

TEST CONDITIONS	TEST DETAILS/RESULTS/ACTIONS
J1 CHECK THE OPERATION REQUIREMENTS	
	1 **NOTE:** NO SVC indicator might illuminate within your coverage area when the vehicle is in totally enclosed areas such as underground parking garages or tunnels. This does not indicate a hardware failure. — The cellular phone must be properly programmed. Refer to the User's Guide. — The vehicle should be in the coverage area. Check with the local carrier if not sure. • Are all of these operating requirements met? → **Yes** REPLACE the portable convertible phone. TEST the system for normal operation. → **No** GO to **J2**.
J2 CHECK THE PORTABLE CONVERTIBLE PHONE	
	1 Disconnect the portable convertible phone from the console wiring. 2 Power up portable convertible phone in a known good cellular service area. • Is NO SVC still displayed in the cellular mode? → **Yes** REPLACE the portable convertible phone. TEST the system for normal operation. → **No** GO to **J3**.
J3 CHECK THE ANTENNA MOUNTING	
	1 Make sure the antenna mast is screwed on tightly, and inspect the inside and outside antenna bases to make sure they are firmly glued to the glass. • Is the antenna mounting OK? → **Yes** GO to **J4**. → **No** REPAIR as required. TEST the system for normal operation.

(Continued)

Official Licensed Product Ford Motor Co.

DIAGNOSIS AND TESTING (Continued)

PINPOINT TEST J: NO SVC DISPLAY STAYS ON (Continued)

TEST CONDITIONS	TEST DETAILS/RESULTS/ACTIONS
J4 CHECK THE ANTENNA RESISTANCE	
1 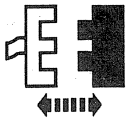 Antenna Cable Back Window Base 2 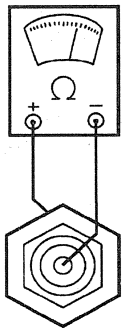 AK0861-A	2 Measure the resistance between the antenna cable center conductor and the outer shield at the armrest or center console connection. • Is the resistance less than 100 ohms? → **Yes** GO to **J5**. → **No** REPLACE the inside antenna base. TEST the system for normal operation.
J5 CHECK THE ANTENNA CABLE	
1 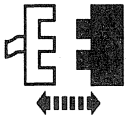 Antenna Cable From Console Junction Box (Early Production) 2 Coil Cord (Late Production Without Junction Box) 3 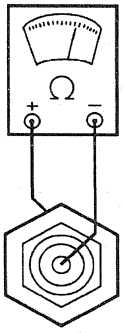 AK0861-A	3 Measure the resistance between antenna cable center conductor and the outer shield with the connector removed from the inside base antenna. • Is the resistance greater than 10,000 ohms? → **Yes** REPLACE the antenna. TEST the system for normal operation. → **No** REPLACE the antenna cable. TEST the system for normal operation.

Officially licensed Product
Ford Motor Company

DIAGNOSIS AND TESTING (Continued)

PINPOINT TEST K: CANNOT ENTER THE PROGRAMMING MODE

TEST CONDITIONS	TEST DETAILS/RESULTS/ACTIONS
K1 VERIFY THE SECURITY CODE	
	1 Make sure the: — correct entry sequence is used. — entry sequence is entered quickly enough. 2 Verify the security code. • Has the programming mode been entered? → **Yes** The system is operating properly at this time. → **No** REPLACE the portable convertible phone. TEST the system for normal operation.

PINPOINT TEST L: THE VOICE ACTIVATED PHONE FUNCTIONS INOPERATIVE

TEST CONDITIONS	TEST DETAILS/RESULTS/ACTIONS
L1 CHECK FOR A BEEP FROM THE AUDIO SYSTEM	
	1 Connect the portable convertible phone to the console coil cord and mount in the holder. 2 Power up the phone. • Can a beep be heard? → **Yes** GO to **L2**. → **No** GO to Pinpoint Test F.
L2 CHECK FOR PHONE RESPONSE	
	1 With the portable convertible phone mounted in the holder, press and hold the # or * button on the portable cellular phone. • Does the phone indicate: NAME PLEASE VOICE DIRECTORY EMPTY or READY? → **Yes** GO to **L3**. → **No** REPLACE the portable support electronics. TEST the system for normal operation.

(Continued)

Official Licensed Product Ford Motor Company®

DIAGNOSIS AND TESTING (Continued)

PINPOINT TEST L: THE VOICE ACTIVATED PHONE FUNCTIONS INOPERATIVE (Continued)

TEST CONDITIONS	TEST DETAILS/RESULTS/ACTIONS
L3 CHECK THE FUNCTION BUTTON	
	1 With the portable convertible phone mounted in the holder, press the microphone button on the A pillar. • Does the phone display: READY? → **Yes** The system is operating properly. → **No** GO to Pinpoint Test H.

PINPOINT TEST M: THE RADIO DISPLAY DOES NOT DISPLAY PHONE — NO PHONE INFORMATION DISPLAYED ON THE RADIO

TEST CONDITIONS	TEST DETAILS/RESULTS/ACTIONS
M1 CHECK FOR DTCS	
1 2 CPM Self-Test	• Is DTC U1235 retrieved? → **Yes** REFER to Section 413-08. → **No** REPLACE the portable support electronics. TEST the system for normal operation.

Official Licensed Product
Ford Motor Company

REMOVAL AND INSTALLATION

Transceiver — Portable Support Electronics (PSE) Module

Removal

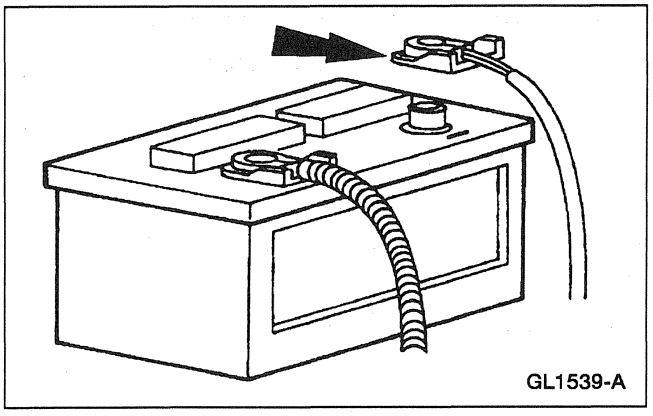

1. Disconnect the battery ground cable.

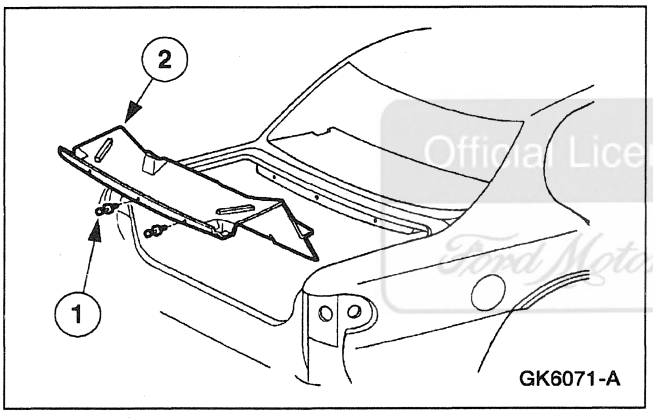

2. Remove the luggage compartment cover.
   1 Remove the pushpins.
   2 Remove the luggage compartment cover.

Official Licensed Product
Ford Motor Company

3. Remove the pushpins and pull down the left side of the module tray.

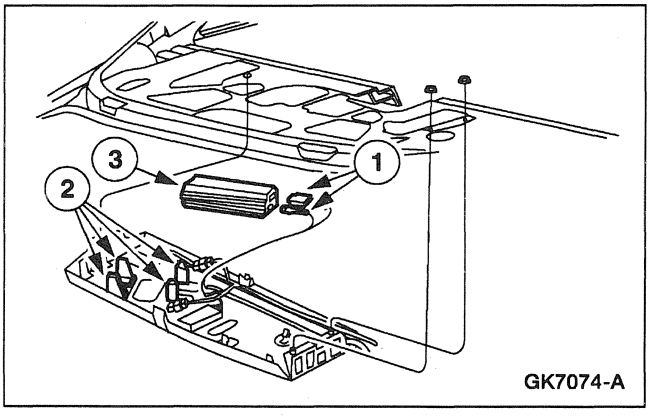

4. Remove the portable support electronics module.
   1 Disconnect the electrical connectors.
   2 Unclip the portable support electronics module.
   3 Remove the portable support electronics module.

REMOVAL AND INSTALLATION (Continued)

Installation

1. **NOTE:** When the battery in disconnected and reconnect, some abnormal drive symptoms may occur while the vehicle relearns its adaptive strategy. The vehicle may need to be driven 16 km (10 mi) or more to relearn the strategy.

   To install, reverse the removal procedure.

Official Licensed Product
Ford Motor Company

SECTION 419-10 Multi-Function Electronic Control Modules

VEHICLE APPLICATION: Mark VIII

SUBJECT **PAGE**

DESCRIPTION AND OPERATION
Module Controlled Functions 419-10-2
DIAGNOSIS AND TESTING
Multi-Function Electronic Module 419-10-3
REMOVAL AND INSTALLATION
Module — Control, Air Suspension 419-10-3
Module — Driver Door (DDM) 419-10-6
Module — Driver Seat (DSM) 419-10-7
Module — Steering Column/Ignition/Lighting (SCIL) 419-10-8
SPECIFICATIONS 419-10-10

Official Licensed Product
Ford Motor Company

DESCRIPTION AND OPERATION

Module Controlled Functions

Multi-Function Electronic Control Modules

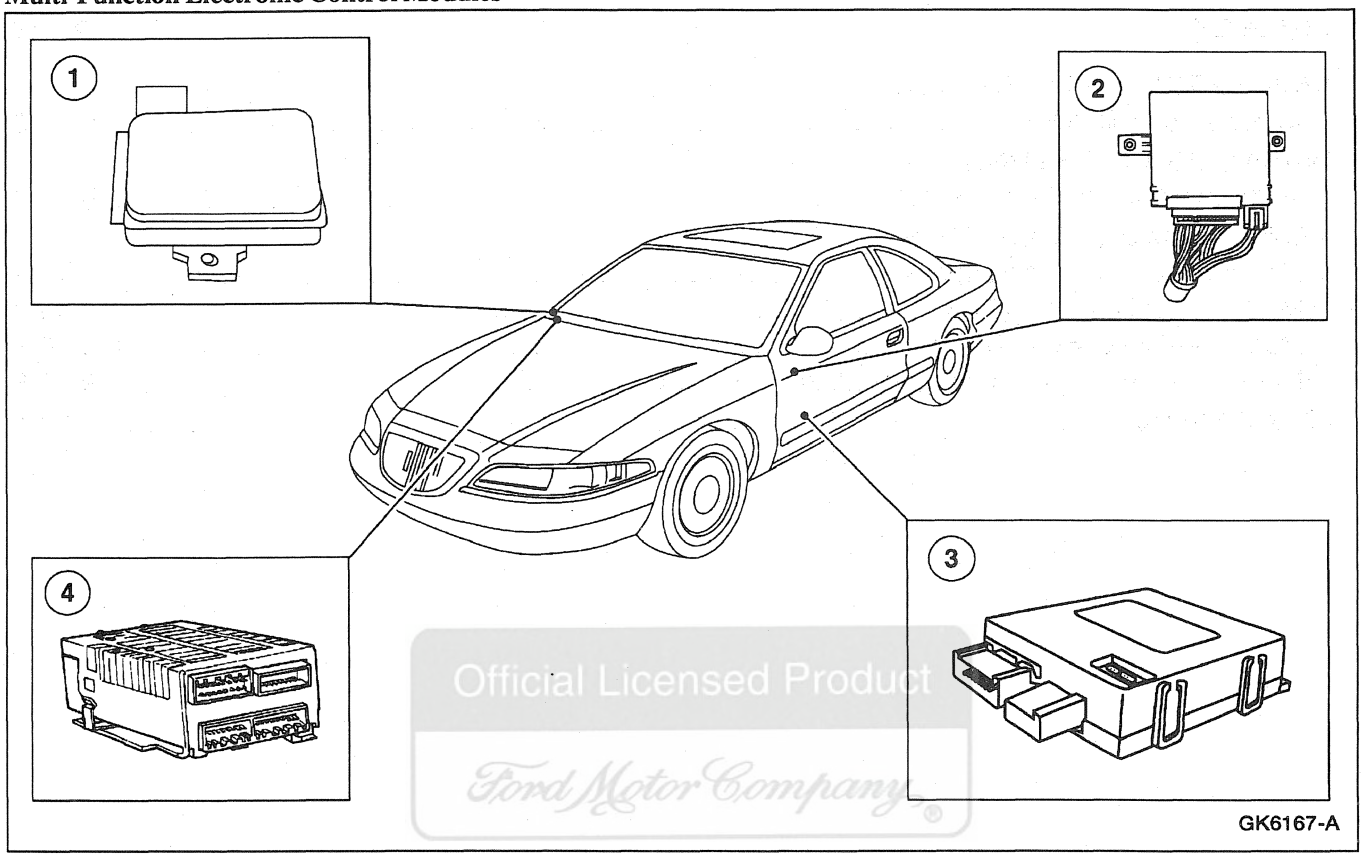

Official Licensed Product
Ford Motor Company

Item	Part Number	Description
1	—	Control Module — Air Suspension
2	—	Driver Door Module (DDM)

(Continued)

Item	Part Number	Description
3	—	Driver Seat Module (DSM)
4	—	Steering Column/Ignition/Lighting (SCIL) Control Module

The air suspension control module is linked to its own data link connector (DLC). The air suspension control module controls the air suspension and the electronic variable orifice (EVO) steering.

The driver door module (DDM) is connected on the standard corporate protocol (SCP) communication network. The DDM controls many functions including power windows, power door locks and remote keyless entry. The DDM also communicates with the driver seat module (DSM) to control power seat and mirror memory functions. For further information on remote keyless entry refer to Section 501-14B.

The DSM is connected on the SCP communication network. The DSM controls the driver power seat, and communicates with the DDM to control the driver seat memory and both outside memory mirror functions. Refer to Section 501-10.

The SCIL module is linked to the SCP communication network. The SCIL module controls the steering column relays for movement and memory. The SCIL module controls the anti-theft system and also controls all interior and exterior lighting. For further information on exterior lighting; refer to Section 417-01. For further information on interior lighting; refer to Section 417-02. For further information on anti-theft; refer to Section 419-01B.

DIAGNOSIS AND TESTING

Multi-Function Electronic Module

For driver seat module concerns, refer to Section 501-10.

For power heated memory mirror concerns, refer to Section 501-09.

For passive anti-theft concerns, refer to Section 419-01B.

For remote keyless entry concerns, refer to Section 501-14B.

For active anti-theft concerns, refer to Section 419-01A.

For warning chime concerns, refer to Section 413-09.

For courtesy lamps/illuminated entry and battery saver concerns, refer to Section 417-02.

For one-touch down window concerns, refer to Section 501-11.

For wiper/washer control and interval timer concerns, refer to Section 501-16.

For telescopic steering concerns, refer to Section 211-04.

For air suspension concerns, refer to Section 204-05.

REMOVAL AND INSTALLATION

Module — Control, Air Suspension

Removal

⚠ WARNING: THE AIR SUSPENSION SYSTEM MUST BE SHUT OFF PRIOR TO HOISTING, JACKING OR TOWING AN AIR SUSPENSION VEHICLE. THIS CAN BE ACCOMPLISHED BY DISCONNECTING THE BATTERY OR TURNING OFF THE AIR SUSPENSION SWITCH LOCATED IN THE LUGGAGE COMPARTMENT ON THE LH SIDE. FAILURE TO DO SO MAY RESULT IN UNEXPECTED INFLATION OR DEFLATION OF THE AIR SPRINGS WHICH MAY RESULT IN SHIFTING OF THE VEHICLE DURING THESE OPERATIONS.

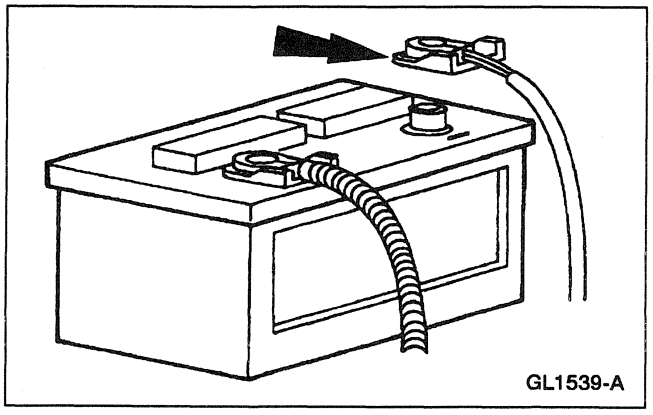
GL1539-A

1. **⚠ CAUTION: Electronic modules are sensitive to electrical charges. If exposed to these charges, damage may result.**

   Disconnect the battery ground cable (14301).

2. Turn off the air suspension switch.

REMOVAL AND INSTALLATION (Continued)

3. Remove the glove compartment; refer to Section 501-12.

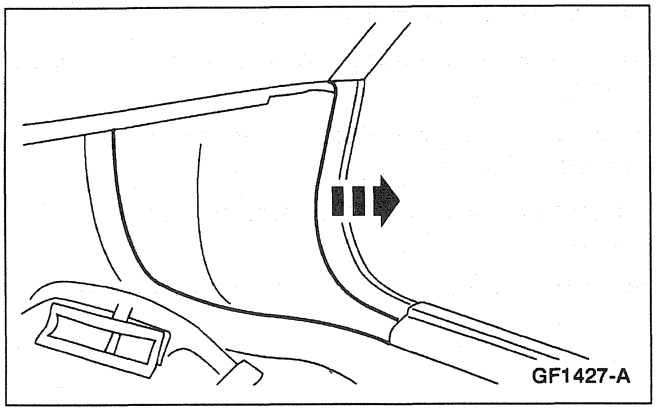

4. Remove the RH front cowl trim panel.

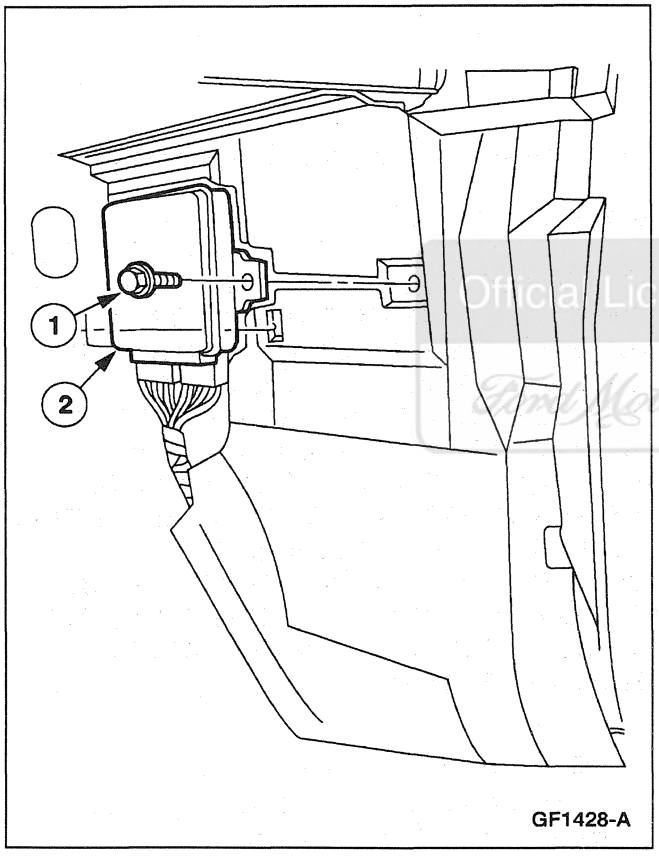

5. Remove the air suspension control module.
   1 Remove the bolt.
   2 Remove the control module.

Official Licensed Product
Ford Motor Company

REMOVAL AND INSTALLATION (Continued)

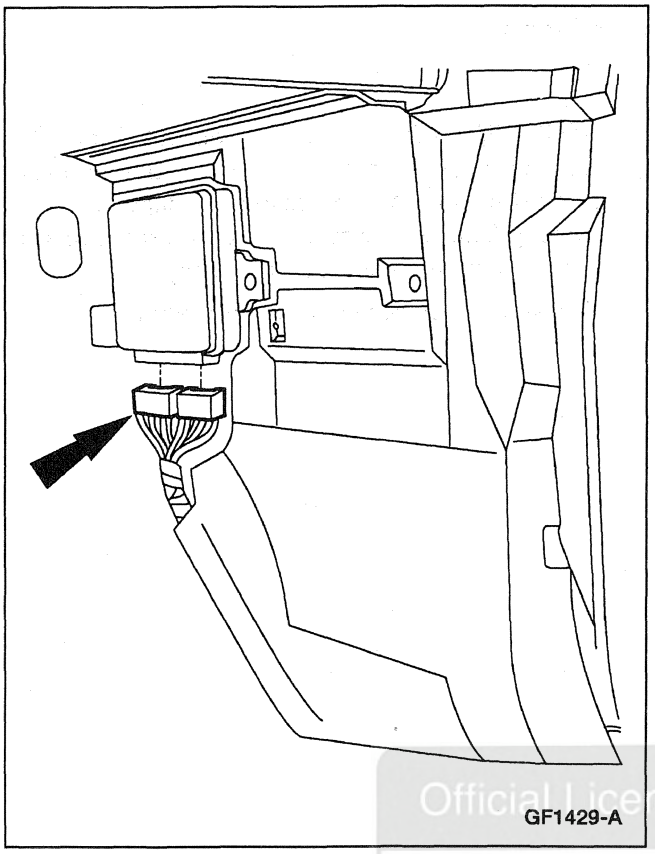

6. Disconnect the electrical connector.

Official Licensed Product
Ford Motor Company

REMOVAL AND INSTALLATION (Continued)

Installation

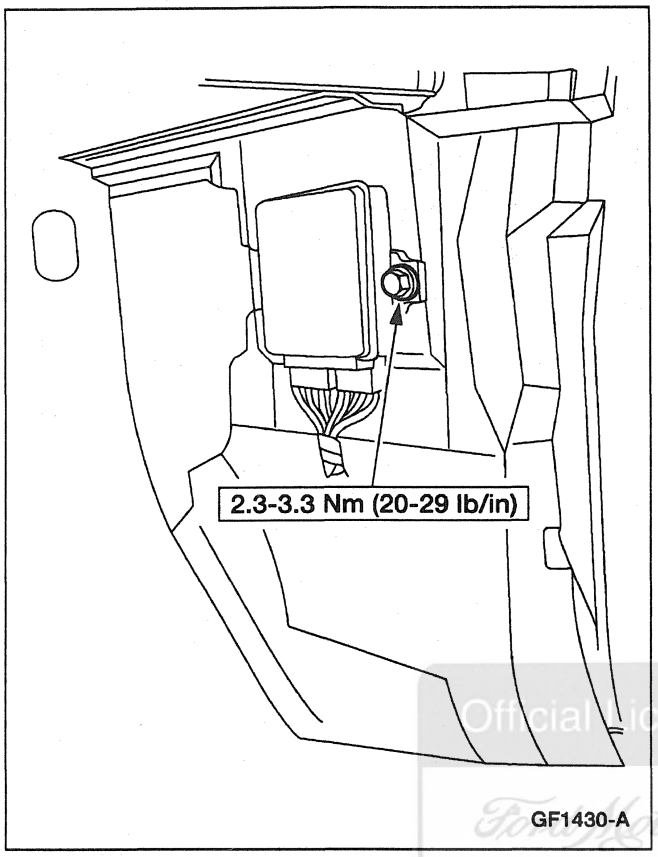

1. **NOTE:** When the battery is disconnected and reconnected, some abnormal drive symptoms may occur while the vehicle relearns its adaptive strategy. The vehicle may need to be driven 16 km (10 mi) or more to relearn the strategy.

   To install, reverse the removal procedure.

Official Licensed Product
Ford Motor Company

Module — Driver Door (DDM)

Removal

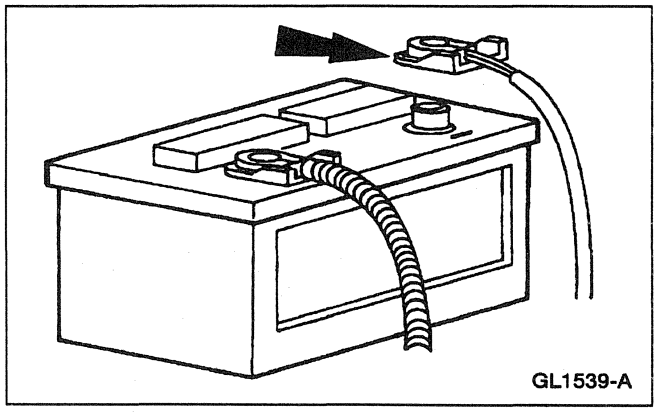

1. ⚠ **CAUTION: Electronic modules are sensitive to electrical charges. If exposed to these charges, damage may result.**

   Disconnect the battery ground cable (14301).

2. Remove the front door trim panel (23942); refer to Section 501-05.

REMOVAL AND INSTALLATION (Continued)

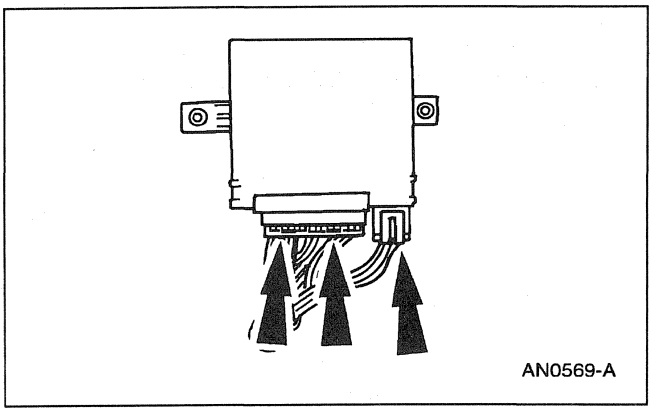

3. Disconnect the electrical connectors from the driver door module (DDM).

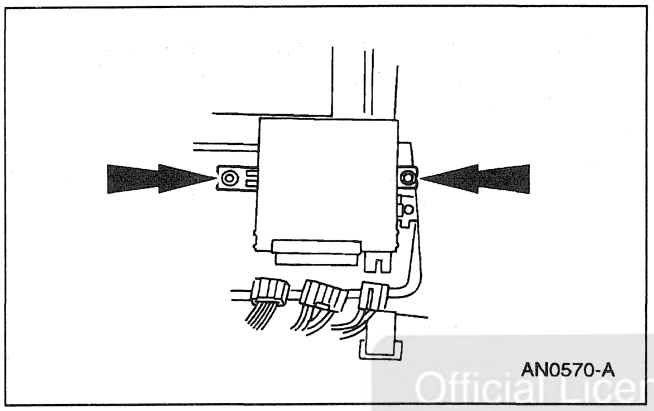

4. Remove the DDM screws and the DDM.

Official Licensed Product
Ford Motor Company

Installation

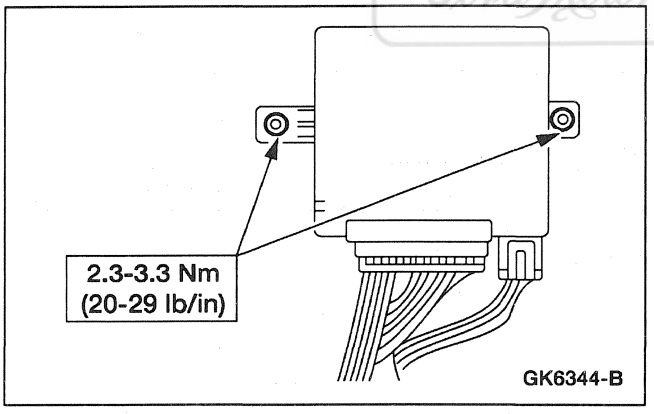

1. **NOTE:** When the battery is disconnected and reconnected, some abnormal drive symptoms may occur while the vehicle relearns its adaptive strategy. The vehicle may need to be driven 16 km (10 mi) or more to relearn the strategy.

   To install, reverse the removal procedure.

Module — Driver Seat (DSM)

Removal

1. Remove the driver seat; refer to Section 501-10.

REMOVAL AND INSTALLATION (Continued)

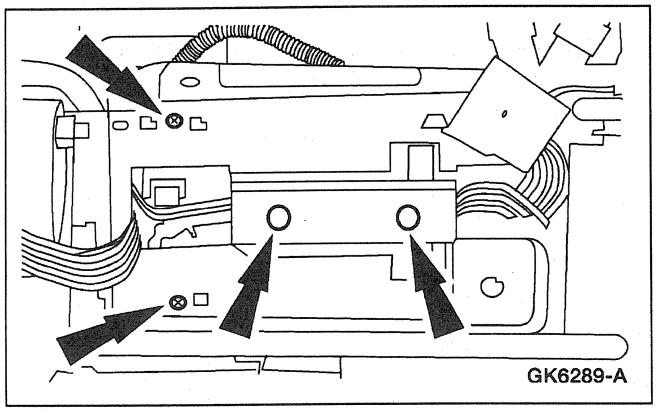

2. Remove the driver seat module (DSM) cover screws and release DSM harness pushpins.

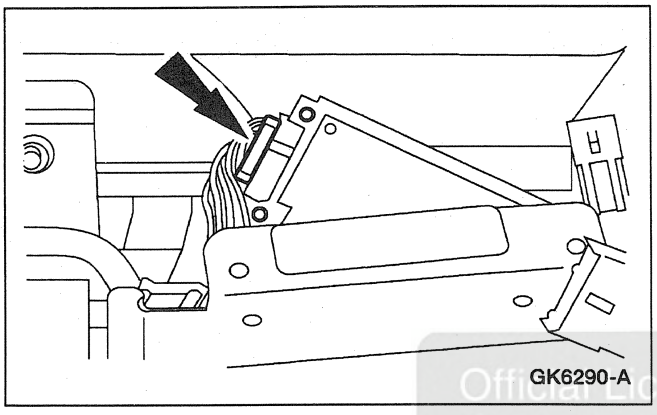

3. Disconnect the four electrical connectors from the DSM and remove the DSM.

Official Licensed Product
Ford Motor Company

Installation

1. To install, reverse the removal procedure.

Module — Steering Column/Ignition/Lighting (SCIL)

Removal

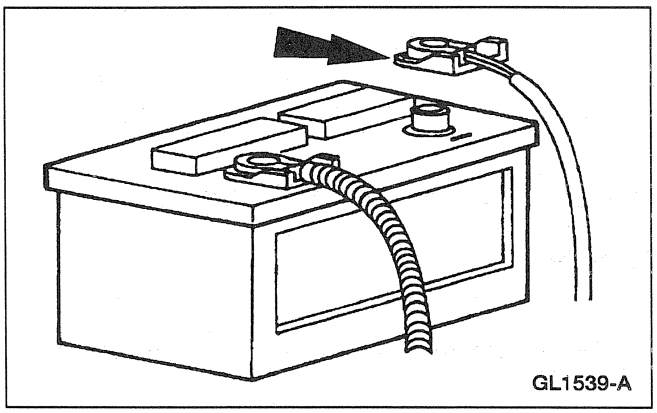

1. ⚠ **CAUTION: Electronic modules are sensitive to electrical charges. If exposed to these charges, damage may result.**

   Disconnect the battery ground cable (14301).

REMOVAL AND INSTALLATION (Continued)

2. Remove the glove compartment; refer to Section 501-12.

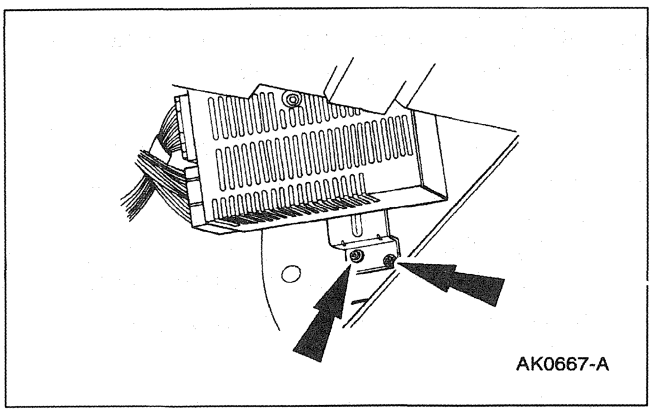

3. Remove the screws from the steering column/ignition/lighting control (SCIL) module mounting bracket.

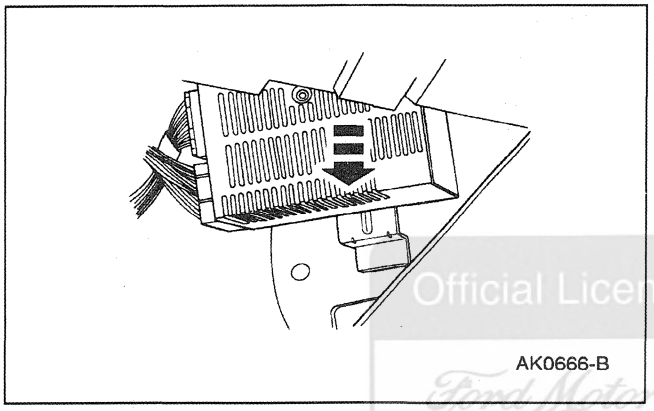

4. Lift and slide the SCIL module downward.

Official Licensed Product
Ford Motor Company

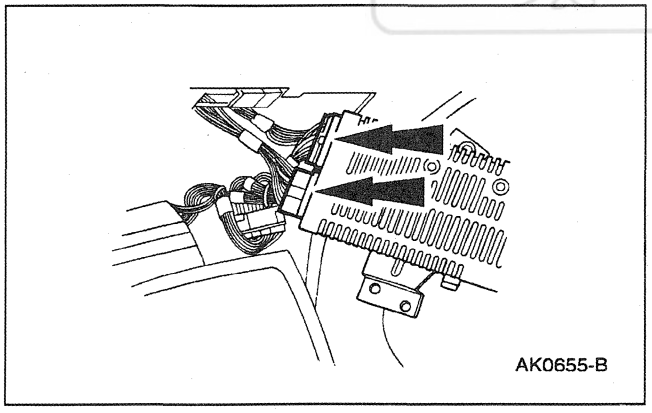

5. Disconnect the four electrical connectors.

REMOVAL AND INSTALLATION (Continued)

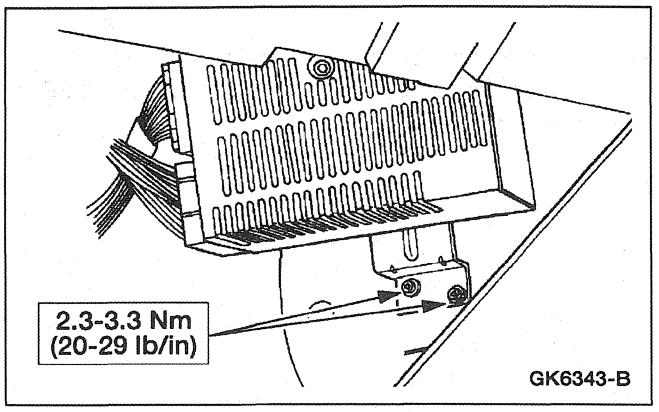

Installation

1. **NOTE:** When replacing the SCIL module it is necessary to reprogram the ignition keys. Refer to Section 419-01B.

   NOTE: When the battery is disconnected and reconnected, some abnormal drive symptoms may occur while the vehicle relearns its adaptive strategy. The vehicle may need to be driven 16 km (10 mi) or more to relearn the strategy.

   To install, reverse the removal procedure.

SPECIFICATIONS

Torque Specifications

Description	Nm	Lb/In
Battery Ground Cable	7-10	62-89
Rear Air Suspension Control Module Bolt	2.3-3.3	20-29
Driver Door Module (DDM) Screws	2.3-3.3	20-29
Steering Column/Ignition/Lighting Control (SCIL) Module Bracket Screws	2.3-3.3	20-29

Official Licensed Product
Ford Motor Company

SECTION 419-11 Electronic Compass

VEHICLE APPLICATION: Mark VIII

SUBJECT **PAGE**

DESCRIPTION AND OPERATION
Compass Display 419-11-2
DIAGNOSIS AND TESTING
Electronic Compass 419-11-3
Inspection and Verification 419-11-3
Pinpoint Tests 419-11-4
Symptom Chart 419-11-3
REMOVAL AND INSTALLATION
Compass Module 419-11-10
GENERAL PROCEDURES
Calibration Adjustment 419-11-15
Compass Zone Adjustment 419-11-13
Vehicle Demagnetizing 419-11-11

Official Licensed Product
Ford Motor Company

DESCRIPTION AND OPERATION

Compass Display

Component Location

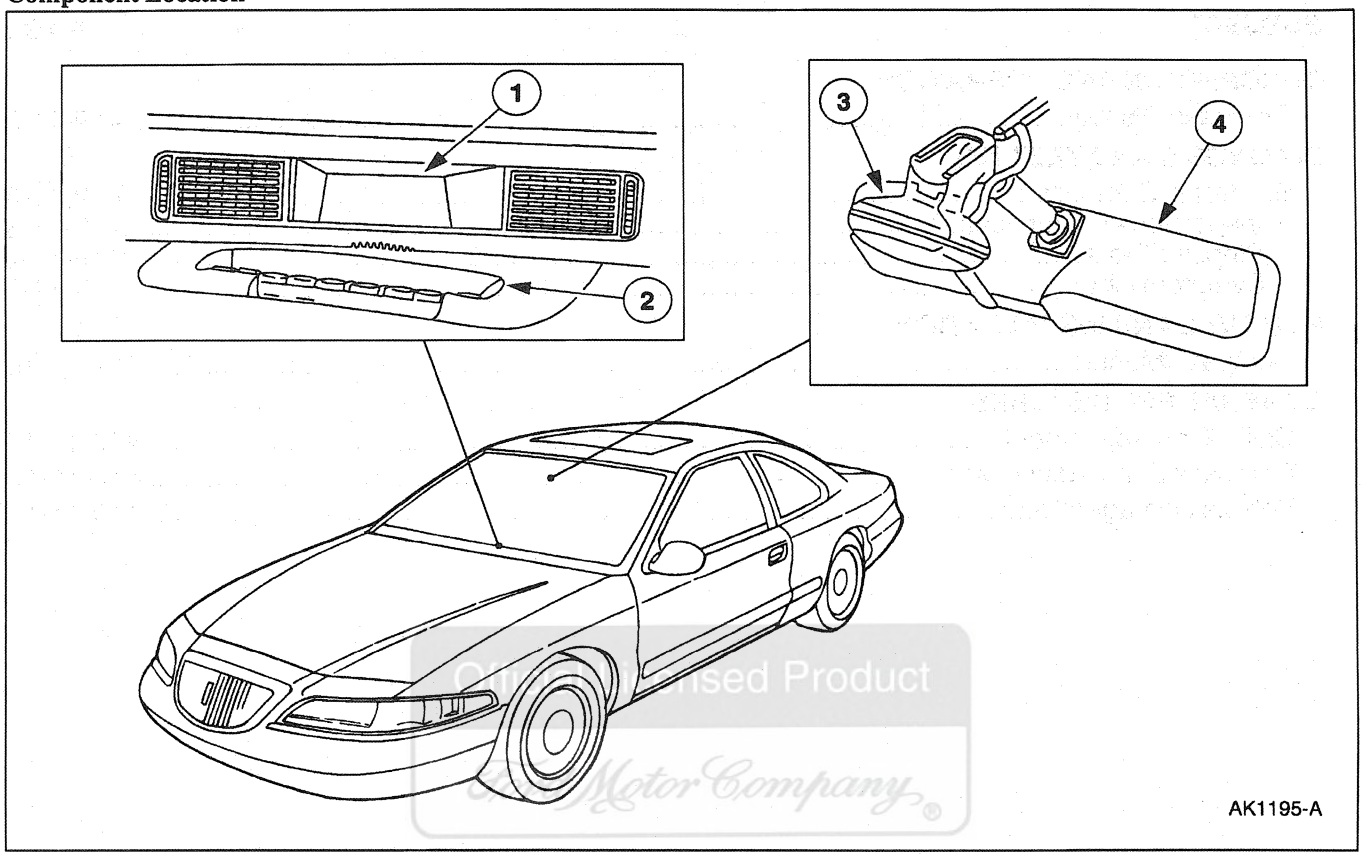

Item	Part Number	Description
1	10D898	Message Center Indicator
2	10D996	Message Center Switch Module

Item	Part Number	Description
3	19A548	Compass Module
4	17700	Inside Rear View Mirror

(Continued)

The digital compass will be displayed by the message center indicator (10D898) when the compass button on the message center switch module (10D996) is pressed. The current vehicle heading will be displayed as one of the following directions: north, northeast, east, southeast, south, southwest, west or northwest.

The steering column/ignition/lighting (SCIL) control module keeps ignition power applied to the compass for ten minutes after the ignition switch is turned to the OFF position. This ten minute period is cancelled by opening the driver door, operating the instrument panel dimmer switch or by turning the ignition switch to the RUN position.

DIAGNOSIS AND TESTING

Electronic Compass

Refer to Electrical and Vacuum Troubleshooting Manual, Cell 69, Message Center for schematic and connector information.

Special Tool(s)

ST1137-A	73 Digital Multimeter or equivalent 105-R0051

Inspection and Verification

1. Verify the customer's concern by operating the compass to duplicate the condition.
2. Inspect to determine if one of the following apply:

Visual Inspection Chart

Mechanical	Electrical
• Damaged message center indicator • Damaged compass module • Loose compass module mounting	• Open Fuse 4 (10A) in fuse junction panel • Circuitry open/shorted • Loose or corroded connectors

3. If the inspection reveals obvious concern(s) that can be readily identified, service as required.
4. If concern(s) remains after the inspection, determine the condition and proceed to Symptom Chart.

Symptom Chart

Symptom Chart

Condition	Possible Source	Action
• The Compass Is Inaccurate or Continuously Displays CIRCLE SLOWLY TO CAL	• Message center indicator. • Zone setting. • Calibration. • Vehicle magnetism. • Compass module.	• GO to Pinpoint Test A.
• The Display Is Locked In One Position	• Message center indicator • Zone setting. • Calibration. • Vehicle magnetism. • Compass module.	• GO to Pinpoint Test A.
• In the Compass Mode, the Message Center Displays CHECK COMPASS SYSTEM	• Circuitry. • Fuse. • Message center indicator. • Compass module.	• GO to Pinpoint Test B.

Official Ford Product
Ford Motor Company

DIAGNOSIS AND TESTING (Continued)

Pinpoint Tests

PINPOINT TEST A: THE HEADING IS INACCURATE OR CONTINUOUSLY DISPLAYS CIRCLE SLOWLY TO CAL

TEST CONDITIONS	TEST DETAILS/RESULTS/ACTIONS
A1 DISPLAY PROVE-OUT	
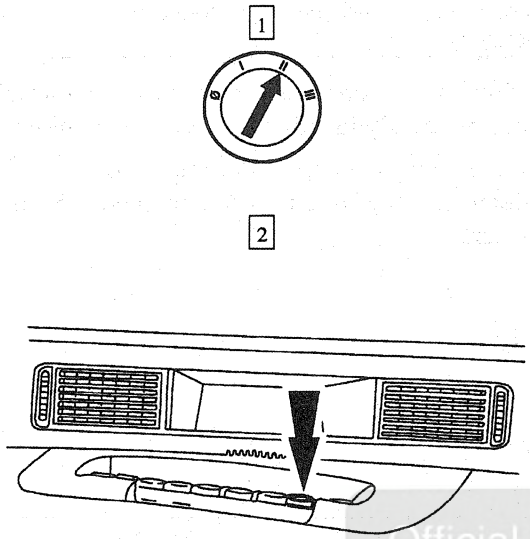 AK1196-A	[2] Press the COMPASS button on the message center indicator. • Did the message center indicator module display light? → **Yes** GO to **A2.** → **No** REFER to Section 413-08.
A2 CHECK THE COMPASS ZONE SETTING	
	[1] Perform the Compass Zone Adjustment; refer to Compass Zone Adjustment. • Was the compass zone adjustment procedure performed successfully? → **Yes** GO to **A3.** → **No** REPLACE the compass module. ADJUST the zone, CALIBRATE and RETEST the system.
A3 ENTER THE COMPASS CALIBRATION MODE	
NOTE: For optimum calibration, turn OFF all electrical accessories and verify all of the doors are closed.	
	[1] Find an open area that is free of steel structures and high voltage lines.

(Continued)

Official Licensed Product Motor Company

DIAGNOSIS AND TESTING (Continued)

PINPOINT TEST A: THE HEADING IS INACCURATE OR CONTINUOUSLY DISPLAYS CIRCLE SLOWLY TO CAL (Continued)

TEST CONDITIONS	TEST DETAILS/RESULTS/ACTIONS
A3 ENTER THE COMPASS CALIBRATION MODE (Continued)	
2 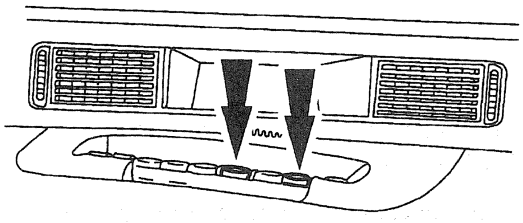 AK1197-A	2 Press and hold the COMPASS button, then press the RESET button. The message center will display the following: • ECO>ZONE • RSET> CAL
3 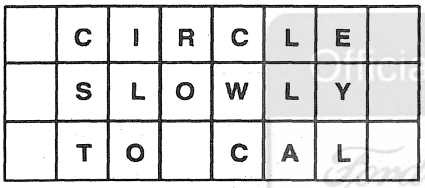 AK1007-A	3 Press the reset button to enter the Calibration mode. Wait 10 seconds or until the message center indicator module displays CIRCLE SLOWLY TO CAL. • Does the message center indicator module display CIRCLE SLOWLY TO CAL? → **Yes** GO to **A4.** → **No** GO to Pinpoint Test B.
A4 CALIBRATE THE COMPASS	
1 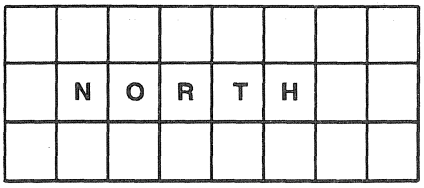 AK1009-A	1 **NOTE:** The CIRCLE SLOWLY TO CAL message should change to a direction within five circles. Slowly drive the vehicle (less than 5 km/h) in circles until the message center displays a direction instead of the CIRCLE SLOWLY TO CAL message. • Was the compass calibration procedure performed successfully? → **Yes** GO to **A6.** → **No** GO to **A5.**

(Continued)

DIAGNOSIS AND TESTING (Continued)

PINPOINT TEST A: THE HEADING IS INACCURATE OR CONTINUOUSLY DISPLAYS CIRCLE SLOWLY TO CAL (Continued)

TEST CONDITIONS	TEST DETAILS/RESULTS/ACTIONS
A5 DEMAGNETIZE VEHICLE	
[1] 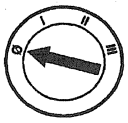	[2] Demagnetize the vehicle; refer to Vehicle Demagnetizing • Was the vehicle demagnetizing procedure performed successfully? → **Yes** GO to **A6.** → **No** REPLACE the compass module. ADJUST the zone, CALIBRATE and RETEST the system.
A6 CHECK THE COMPASS ACCURACY	
	[1] Position the vehicle at each of eight directional headings: NORTH, NORTHEAST, EAST, SOUTHEAST, SOUTH, SOUTHWEST, WEST, and NORTHWEST. • Is the compass accurate? → **Yes** The compass is operating properly. → **No** REPLACE the compass module. ADJUST the zone, CALIBRATE and RETEST the system.

Ford Motor Co. Original Licensed Product

DIAGNOSIS AND TESTING (Continued)

PINPOINT TEST B: IN THE COMPASS MODE, THE MESSAGE CENTER DISPLAYS CHECK COMPASS DISPLAY

TEST CONDITIONS	TEST DETAILS/RESULTS/ACTIONS
B1 CHECK THE COMPASS CONNECTOR	
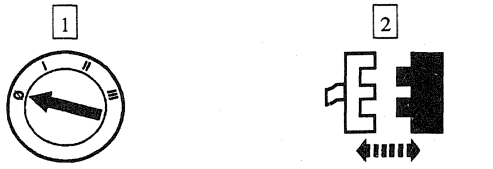 Compass Module C912	3 Inspect the compass module connector and wires for full engagement. • Are the wires and connector fully engaged? → **Yes** GO to **B2.** → **No** REPAIR the connector. RETEST the system.
B2 CHECK CIRCUIT 1002 (BK/PK) FOR AN OPEN	
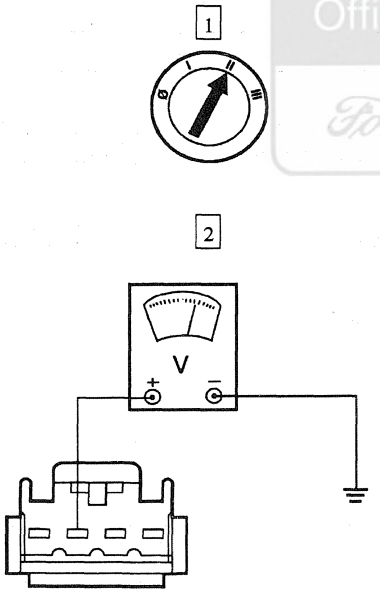 AK1003-A	2 Connect a voltmeter between the compass module connector Pin C912-2, Circuit 1002 (BK/PK) and ground. • Is the voltage reading B+? → **Yes** GO to **B3.** → **No** REPAIR circuit 1002 (BK/PK). RETEST the system.

Official Licensed Product
Ford Motor Company

(Continued)

DIAGNOSIS AND TESTING (Continued)

PINPOINT TEST B: IN THE COMPASS MODE, THE MESSAGE CENTER DISPLAYS CHECK COMPASS DISPLAY (Continued)

TEST CONDITIONS	TEST DETAILS/RESULTS/ACTIONS
B3 CHECK CIRCUIT 57 (BK) FOR AN OPEN	
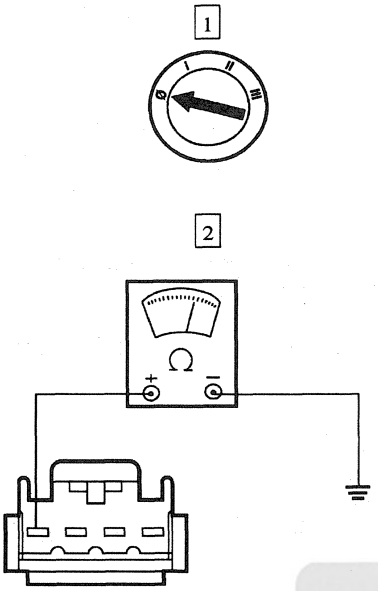 AK1004-A	2 Connect an ohmmeter between the compass module connector Pin C912-1, Circuit 57 (BK) and ground. • Is the resistance 5 ohms or less? → **Yes** GO to **B4.** → **No** REPAIR circuit 57 (BK). RETEST the system.
B4 CHECK CIRCUIT 702 (W/BK)	
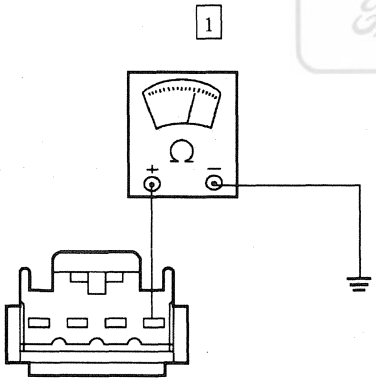 AK1006-A	1 Connect an ohmmeter between the compass module connector Pin C912-4, Circuit 702 (W/BK) and ground. • Is the resistance between 4000 and 8500 ohms? → **Yes** GO to **B6.** → **No** GO to **B5.**

Official Licensed Product
Ford Motor Company

(Continued)

DIAGNOSIS AND TESTING (Continued)

PINPOINT TEST B: IN THE COMPASS MODE, THE MESSAGE CENTER DISPLAYS CHECK COMPASS DISPLAY (Continued)

TEST CONDITIONS	TEST DETAILS/RESULTS/ACTIONS
B5 CHECK CIRCUIT 702 (W/BK) FOR AN OPEN	
1 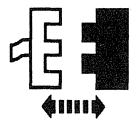 Message Center Indicator C208 2 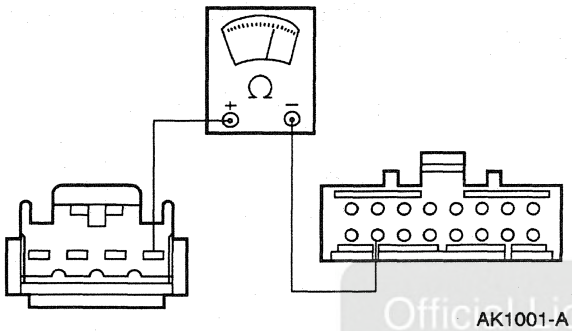 AK1001-A	2 Connect an ohmmeter between the compass module connector Pin C912-4, Circuit 702 (W/BK) and the message center indicator module connector Pin C208-35. • Is the resistance 5 ohms or less? → **Yes** REPLACE the message center indicator. REFER to Section 413-08. RETEST the system. → **No** REPAIR circuit 702 (W/BK). RETEST the system.
B6 CHECK CIRCUIT 703 (W/O)	
1 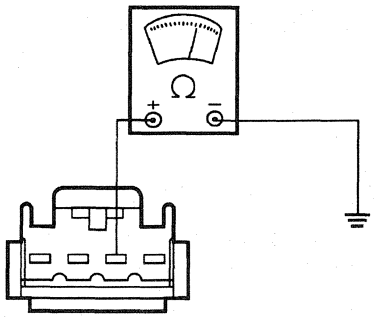 AK1005-A	1 Connect an ohmmeter between the compass module connector Pin C912-3, Circuit 703 (W/O) and ground. • Is the resistance between 1600 and 4000 ohms? → **Yes** REPLACE the compass module; REFER to Compass Module. RETEST the system. → **No** GO to **B7.**

(Continued)

Official Licensed Product Ford Motor Company

DIAGNOSIS AND TESTING (Continued)

PINPOINT TEST B: IN THE COMPASS MODE, THE MESSAGE CENTER DISPLAYS CHECK COMPASS DISPLAY (Continued)

TEST CONDITIONS	TEST DETAILS/RESULTS/ACTIONS
B7 CHECK CIRCUIT 703 (W/O) FOR AN OPEN	
1 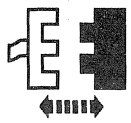 Message Center Indicator C208 2 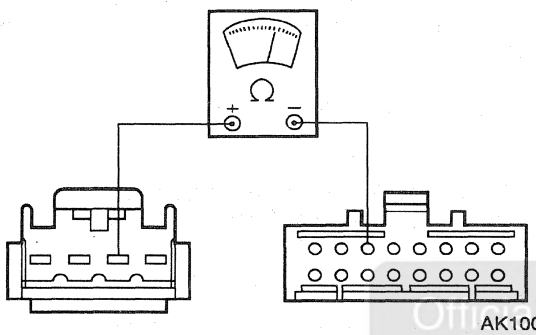 AK1002-A	2 Connect an ohmmeter between the compass module connector Pin C912-3, Circuit 703 (W/O) and message center indicator module connector Pin C208-26. • Is the resistance 5 ohms or less? → **Yes** REPLACE the message center indicator. REFER to Section 413-08. RETEST the system. → **No** REPAIR circuit 703 (W/O) for an open. RETEST the system.

Official Licensed Product
Ford Motor Company

REMOVAL AND INSTALLATION

Compass Module

Removal

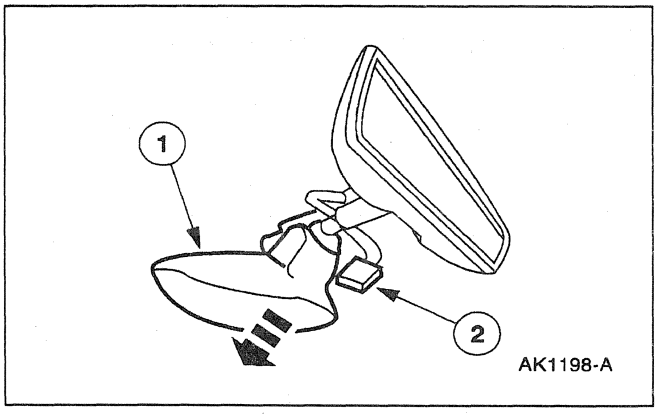

1. Remove the compass module.
   1 Gently pull the compass module down to disengage the mirror mount.
   2 Press the locking tab inward and disconnect the electrical connector from the compass module.

REMOVAL AND INSTALLATION (Continued)

Installation

1. Install the compass module.
   1 Connect the electrical connector into the compass module until locking tab snaps.
   2 Snap the compass module into place on the mirror mount by pressing firmly but gently until the module snaps in place.
2. Perform the Compass Zone Adjustment; refer to Compass Zone Adjustment.
3. Calibrate the compass; refer to Calibration Adjustment.

GENERAL PROCEDURES

Vehicle Demagnetizing

Official Licensed Product
Ford Motor Company®

⚠ **CAUTION: During demagnetizing, the demagnetizer coil will be pulled toward the vehicle. Place a cloth over the vehicle's roof to protect the vehicle's surface if contact occurs. Make sure the cloth covers the front third and the entire width of the roof.**

NOTE: To demagnetize, use a constant circular motion over the vehicle's roof. Do not turn off the demagnetizer while sweeping the vehicle's roof to prevent remagnetizing ferrous materials contained in the vehicle.

NOTE: During the demagnetizing process, make sure the phenolic surface of the tool (the side opposite the handle) is closest to the vehicle's surface.

GENERAL PROCEDURES (Continued)

1. Demagnetize the front third of the vehicle's roof.
   1 Turn on the demagnetizer at least 1 meter (3 ft) away from the vehicle.
   2 Holding the demagnetizer no more than 2.5 cm (1 in) from the roof and starting on the passenger side, demagnetize the front third of the roof closest to the windshield using a constant circular motion. Keep the circle's radius within 30 cm (12 in) while sweeping across the entire surface of the roof closest to the windshield. Continue the circular motion four times.
   3 After the fourth pass and without stopping, move the demagnetizer at least 1 meter (3 ft) away from the vehicle.
   4 Turn the demagnetizer off.

2. **NOTE:** The demagnetizer must be located over the outside of the windshield no greater than 2.5 cm (1 in).

   Demagnetize the inside rear view mirror mounting pad.
   1 Turn on the demagnetizer at least 1 meter (3 ft) away from the vehicle.
   2 Using a circular motion, pass the demagnetizer over the outside of the windshield near the inside rear view mirror mounting pad. Without stopping, move the demagnetizer at least 1 meter (3 ft) away from the vehicle.
   3 Turn the demagnetizer off.

3. Perform the Compass Zone Adjustment; refer to Compass Zone Adjustment.

4. Perform the Calibration Adjustment; refer to Calibration Adjustment.

Official Licensed Product
Ford Motor Company

GENERAL PROCEDURES (Continued)

Compass Zone Adjustment

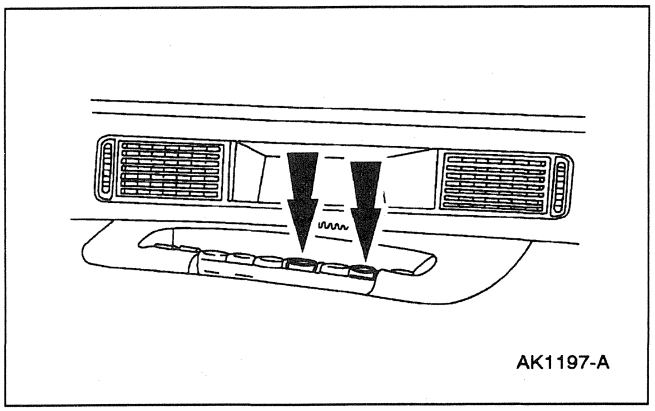
AK1197-A

1. Press and hold the COMPASS button, then press the RESET button. The message center will display the following:
   - ECO>ZONE
   - RSET> CAL

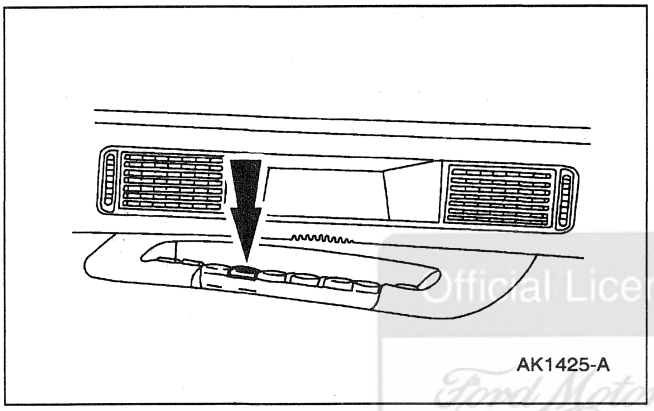
AK1425-A

2. Press the FUEL ECONOMY button to enter the Set Zone mode. The display will now show:
   - RESET TO CHANGE ZONE XX

Official Licensed Product
Ford Motor Company

GENERAL PROCEDURES (Continued)

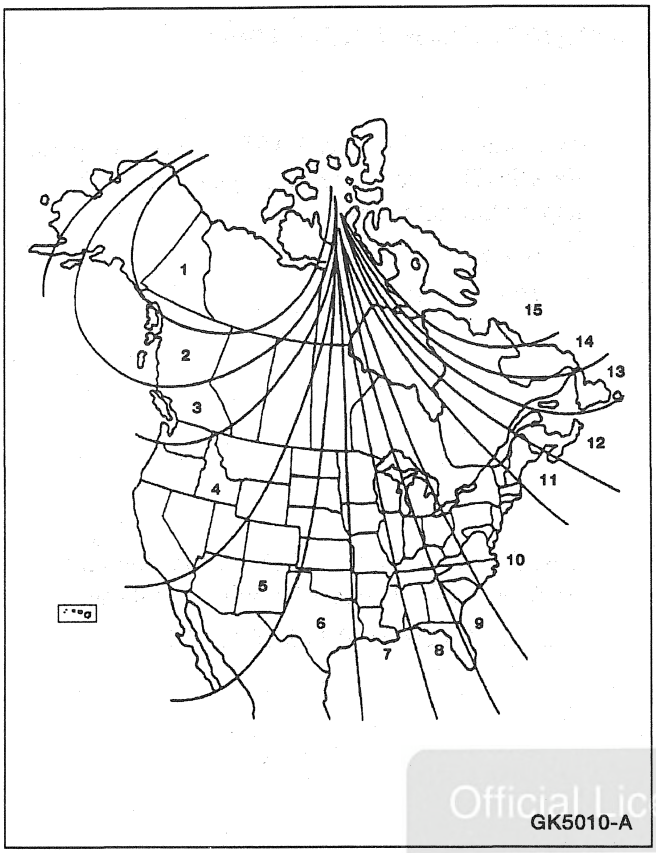

GK5010-A

3. Determine in which zone of the Continent the vehicle is being operated.

Official Licensed Product
Ford Motor Company

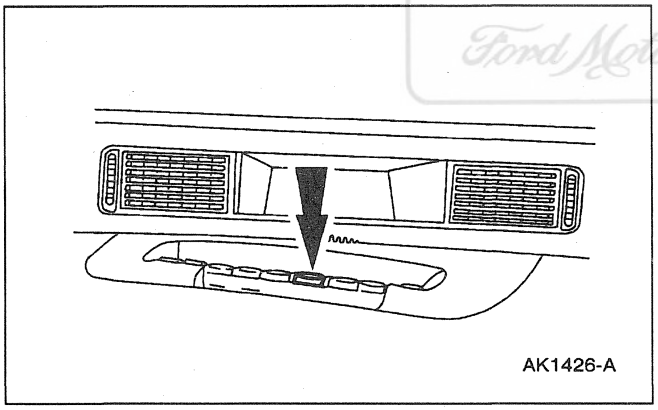
AK1426-A

4. Press the RESET button until the correct zone number is displayed. The display will show:
   - COMPASS TO SET ZONE>XX

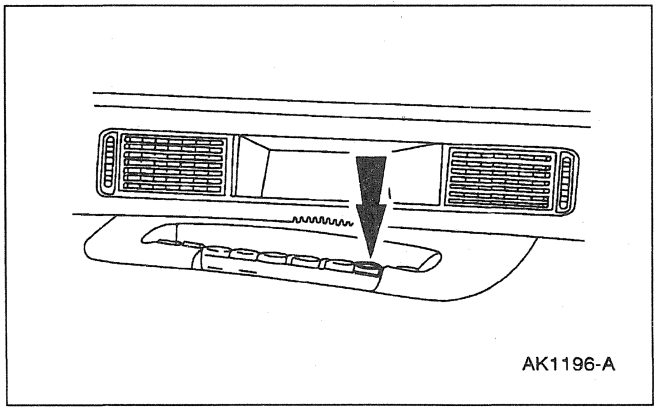
AK1196-A

5. **NOTE:** To exit this mode without setting a zone, press any switch other than reset.

   Press the COMPASS button to complete the Zone Adjustment. The display will now show the current heading.

GENERAL PROCEDURES (Continued)

Calibration Adjustment

NOTE: For optimum calibration, turn OFF all electrical accessories and verify all of the doors are closed.

1. Find an open area that is free of steel structures and high voltage lines.

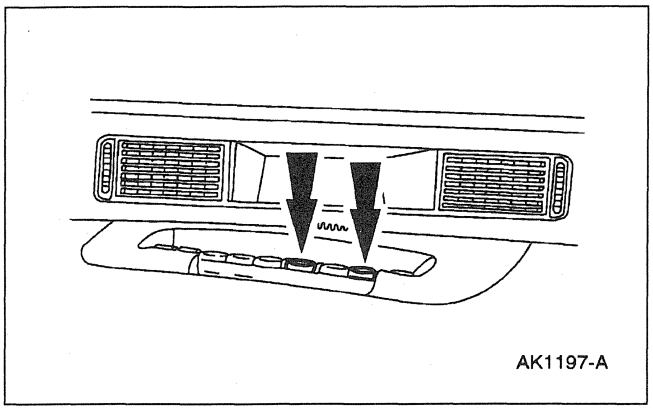
AK1197-A

2. Press and hold the COMPASS button, then press the RESET button. The message center will display the following:
   - ECO>ZONE
   - RSET> CAL

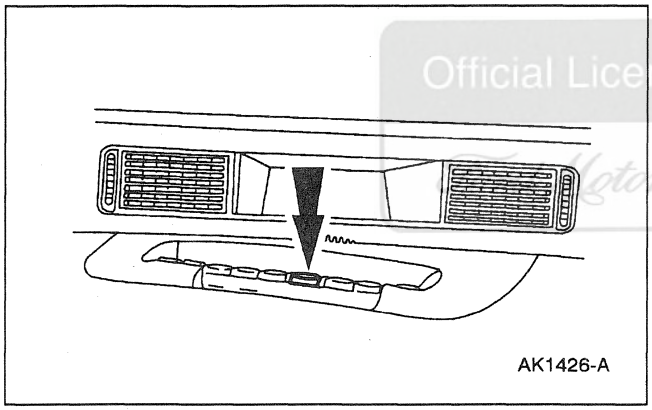
AK1426-A

Official Licensed Product Ford Motor Company

3. Press the reset button to enter the Calibration mode. The display will now show:
   - CIRCLE SLOWLY TO CAL

4. **NOTE:** The CIRCLE SLOWLY TO CAL message should change to a direction within five circles.

   Slowly drive the vehicle (less than 5 km/h [3 mph]) in circles until the message center displays a direction instead of the CIRCLE SLOWLY TO CAL message.

GROUP

BODY AND PAINT 5

SECTION TITLE	PAGE
Front End Body Panels	501-02-1
Body Closures	501-03-1
Interior Trim and Ornamentation	501-05-1
Exterior Trim and Ornamentation	501-08-1
Rear View Mirrors	501-09-1
Seating	501-10-1
Glass, Frames and Mechanisms	501-11-1
Instrument Panel and Console	501-12-1
Handles, Locks, Latches and Mechanisms	501-14A-1
Keyless Entry/Computer Operated Locks	501-14B-1
Wipers and Washers	501-16-1
Sliding Roof Panel	501-17-1
Bumpers	501-19-1
Occupant Restraints — Active	501-20A-1
Occupant Restraints — Passive — Supplemental Air Bag System	501-20B-1
Frame and Mounting System	502-02-1

Official Licensed Product
Ford Motor Company

SECTION 501-02 Front End Body Panels

VEHICLE APPLICATION: Mark VIII

SUBJECT	PAGE
DESCRIPTION AND OPERATION	
Front End Body Panels	501-02-2
REMOVAL AND INSTALLATION	
Cowl — Vent Screen	501-02-3
Grille Opening Panel	501-02-4
SPECIFICATIONS	501-02-7

Official Licensed Product
Ford Motor Company

DESCRIPTION AND OPERATION

Front End Body Panels

Front End Body Panels Components

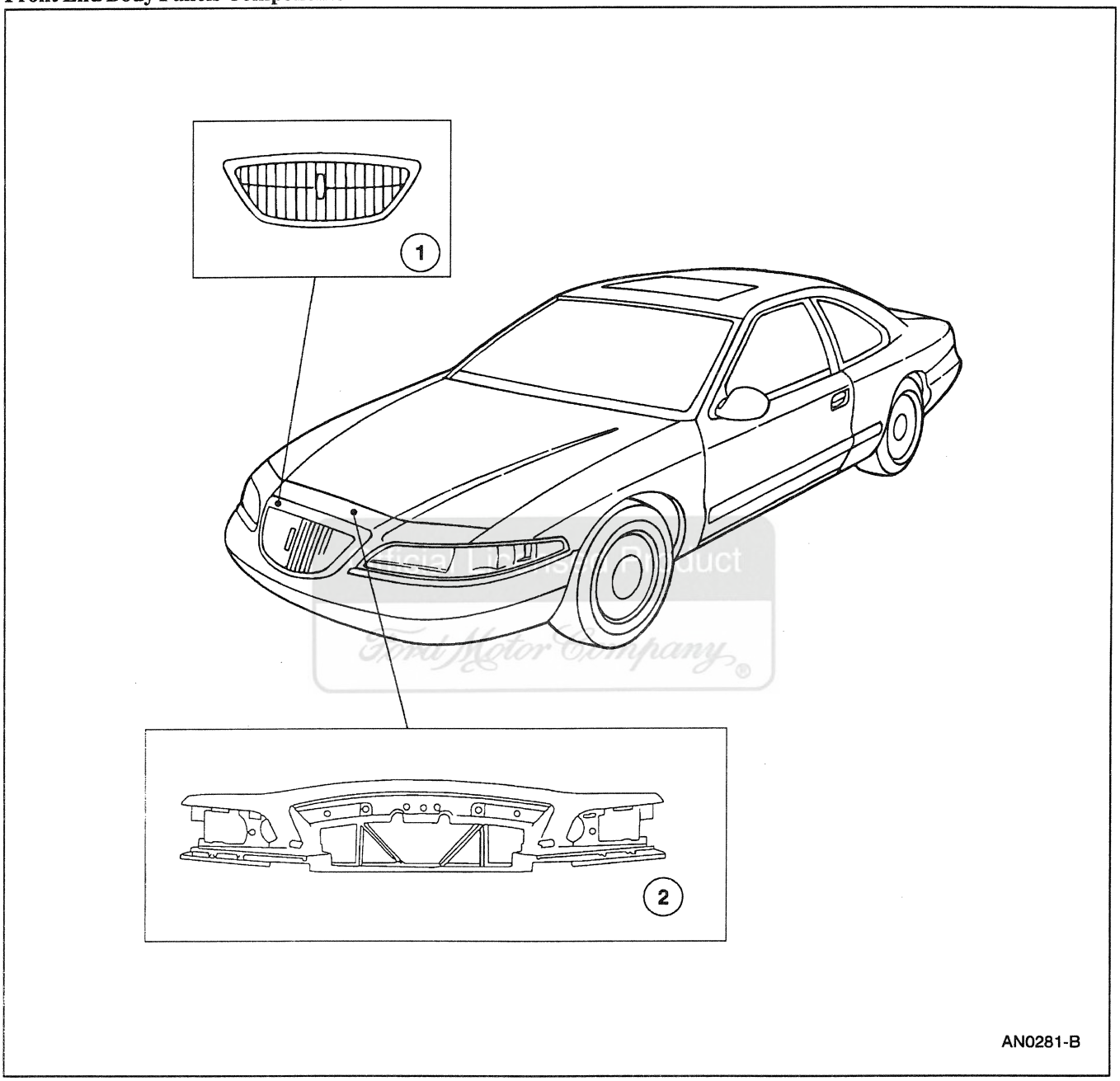

Item	Part Number	Description
1	8200	Radiator Grille
2	8190	Radiator Grille Opening Panel

- The radiator grille (8200) is removed as a unit with the front bumper cover; refer to Section 501-19.
- The hood (16612) is a front-opening type attached to the body with two hood hinges (16796).

DESCRIPTION AND OPERATION (Continued)

- The hood is raised by two hood lifts (16C826) and secured by a standard double-release hood latch (16700).
- The hood latch has a safety latch, which must be manually released after the hood latch control handle and cable (16916) has been released.
- The hood latch latches the hood latch striker (16K689) , which is attached to the front underside of the hood.

REMOVAL AND INSTALLATION

Cowl — Vent Screen

Removal

1. Remove the windshield wiper pivot arm (17526); refer to Section 501-16.

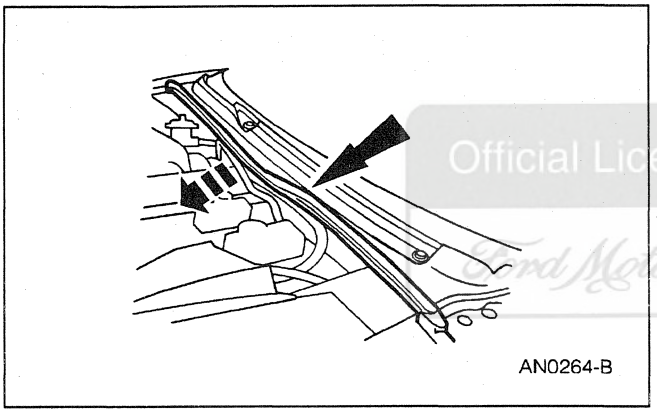
AN0264-B

2. Remove the hood pad (16740).

Official Licensed Product
Ford Motor Company

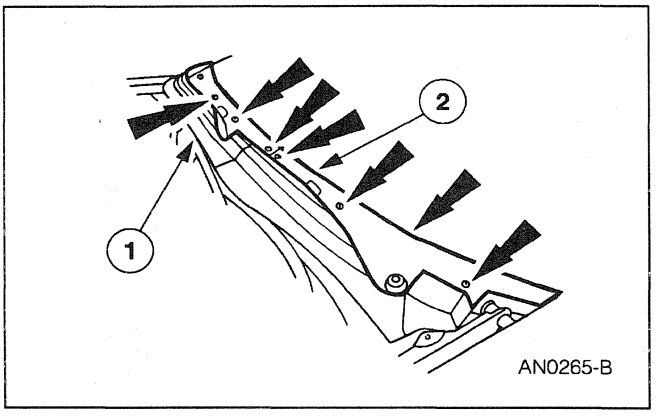

AN0265-B

3. **NOTE:** The cowl vent screen screws are removed by pushing them in and turning them a quarter turn.

   Remove the cowl vent screens (018A17).

   1 Remove the screws and the RH cowl vent screen (018A16).

   2 Remove the screws and LH cowl vent screen.

REMOVAL AND INSTALLATION (Continued)

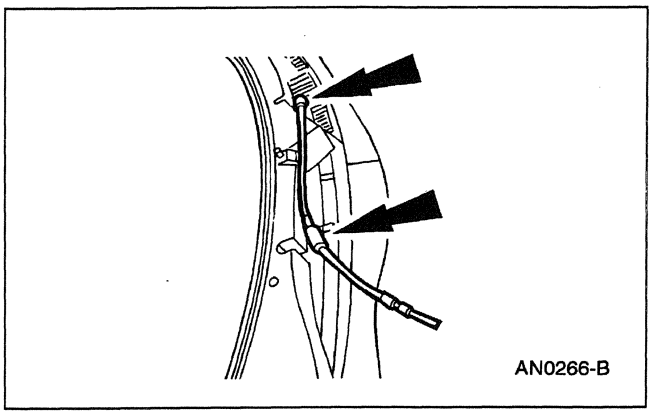

4. Disconnect the window washer hose (17408) from the cowl vent screens.

Installation

1. Follow the removal procedure in reverse order.

Grille Opening Panel

Removal

Official Licensed Product
Ford Motor Company

1. Remove the front bumper cover (17D957) and the radiator grille (8200); refer to Section 501-19.
2. Remove the headlamps (13008); refer to Section 417-01.
3. Remove the front air bag sensor and bracket (14B004); refer to Section 501-20B.
4. Loosen eight front fender screws.

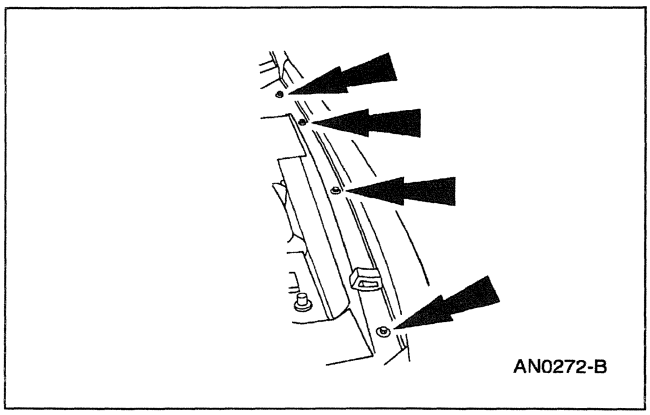

REMOVAL AND INSTALLATION (Continued)

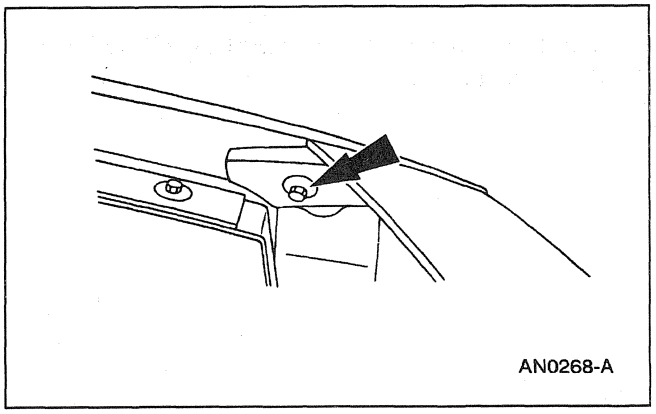

5. Remove the two radiator grille opening panel to fender screws.

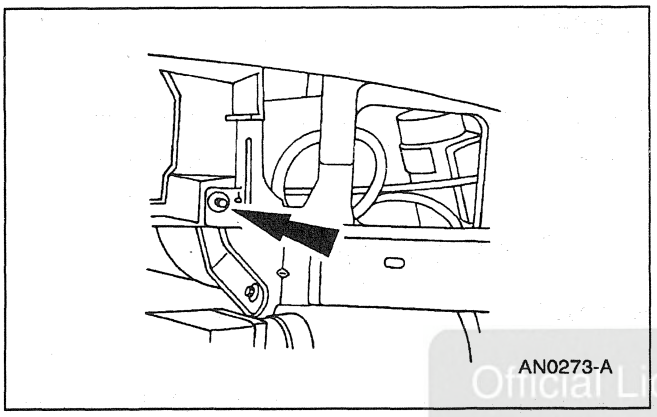

6. Remove the two front fender to grille opening panel screws.

Official Licensed Product
Ford Motor Company

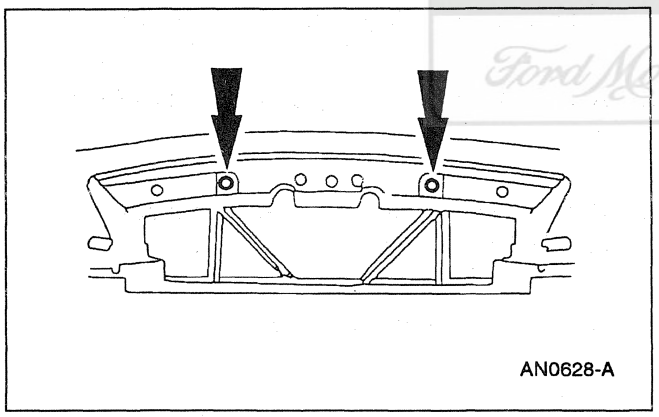

7. Remove the radiator grille opening upper bracket screws.

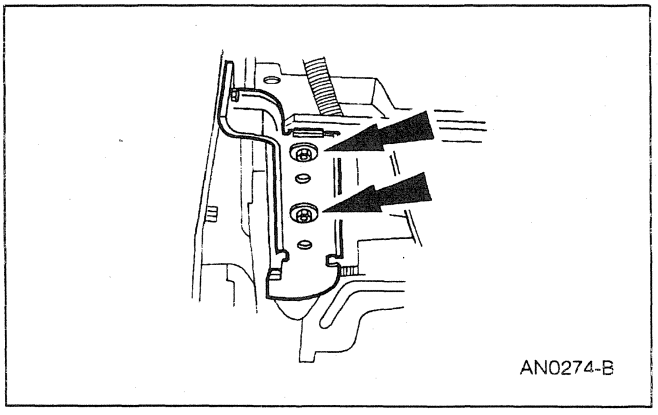

8. Remove the four grille opening panel to bracket screws.

REMOVAL AND INSTALLATION (Continued)

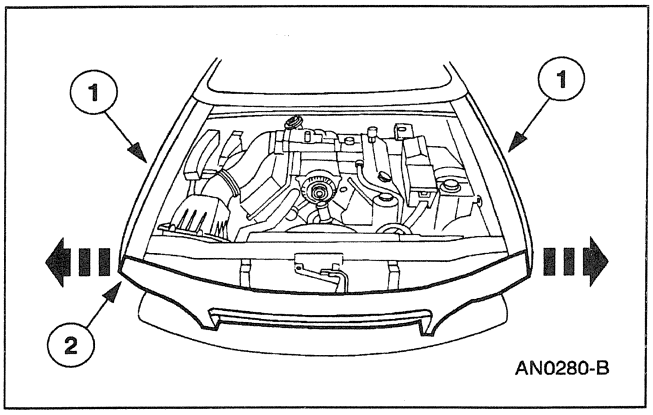

9. Remove the grille opening panel.
   1 Pull the front fenders (16005) out to release the grille opening panel pins.
   2 Remove the radiator grille opening panel (8190).

Installation

1. Follow the removal procedure in reverse order.

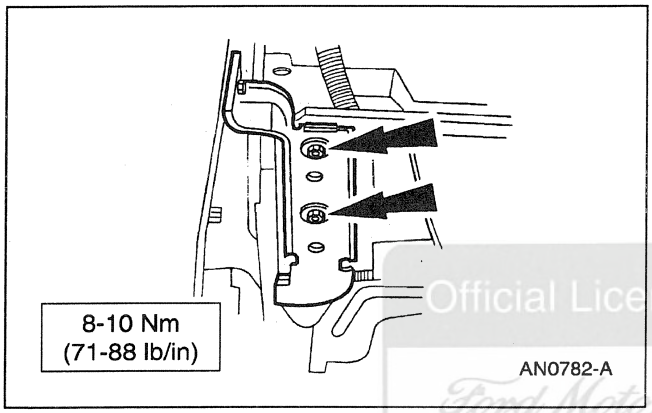

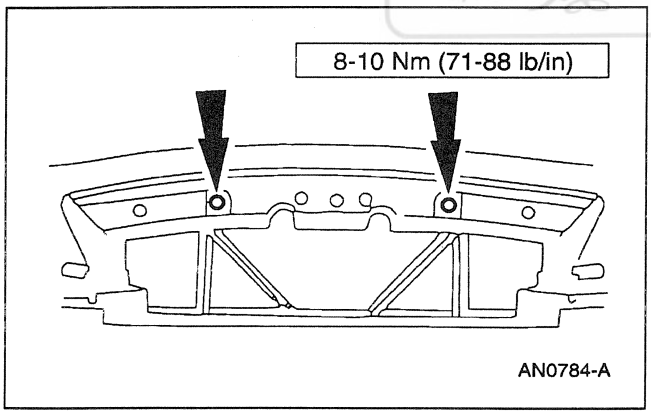

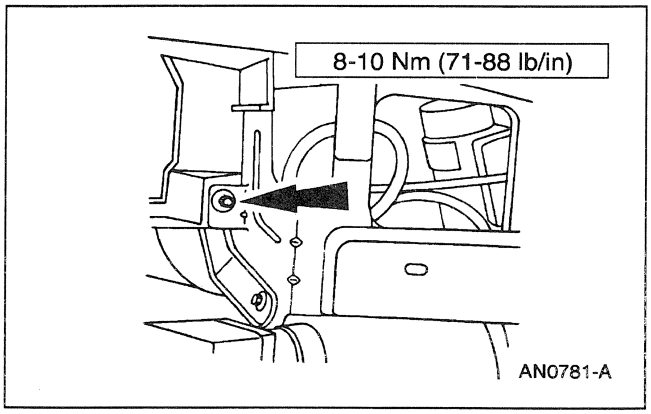

Official Licensed Product
Ford Motor Company

REMOVAL AND INSTALLATION (Continued)

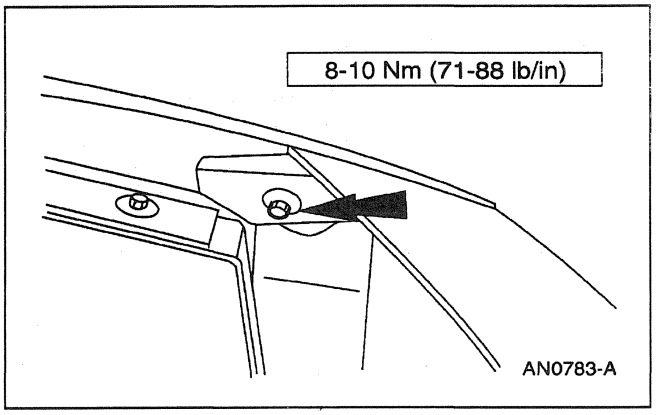

SPECIFICATIONS

Torque Specifications

Description	Nm	Lb/In
Hood Latch to Upper Radiator Support Screws	10-14	89-123
Front Fender Splash Shield to Front Fender Screws	1.3-1.7	12-15
Hood Hinge to Front Fender Bolts	9-14	80-123
Hood Hinge to Hood Bolts	9-14	80-123
Radiator Grille Opening Upper Bracket Screws	8-10	71-88

(Continued)

Torque Specifications

Description	Nm	Lb/In
Radiator Grille Opening Panel to Fender Screws	8-10	71-88
Grille Opening Panel to Bracket Screws	8-10	71-88
Front Fender to Grille Opening Panel Screws	8-10	71-88

Ford Motor Company

SECTION 501-03 Body Closures

VEHICLE APPLICATION: Mark VIII

SUBJECT	PAGE
DESCRIPTION AND OPERATION	
Body Closures	501-03-2
REMOVAL AND INSTALLATION	
Door — Front	501-03-3
Door — Luggage Compartment	501-03-4
GENERAL PROCEDURES	
Hinge Adjustment	501-03-6
Striker Adjustment — Front Door	501-03-6
Striker Adjustment — Luggage Compartment	501-03-7
Torsion Bar Loading	501-03-8
SPECIFICATIONS	501-03-9

Official Licensed Product
Ford Motor Company

DESCRIPTION AND OPERATION

Body Closures

Body closures consist of:

- the front doors (20124) are bolted to the front door upper hinges (22800) and the front door lower hinges. Front door upper hinges and front door lower hinges (22810) are bolted to the body.
- the luggage compartment door (40110) is bolted to luggage compartment door hinge (42700). The luggage compartment door hinge is welded to the body.

Component Location

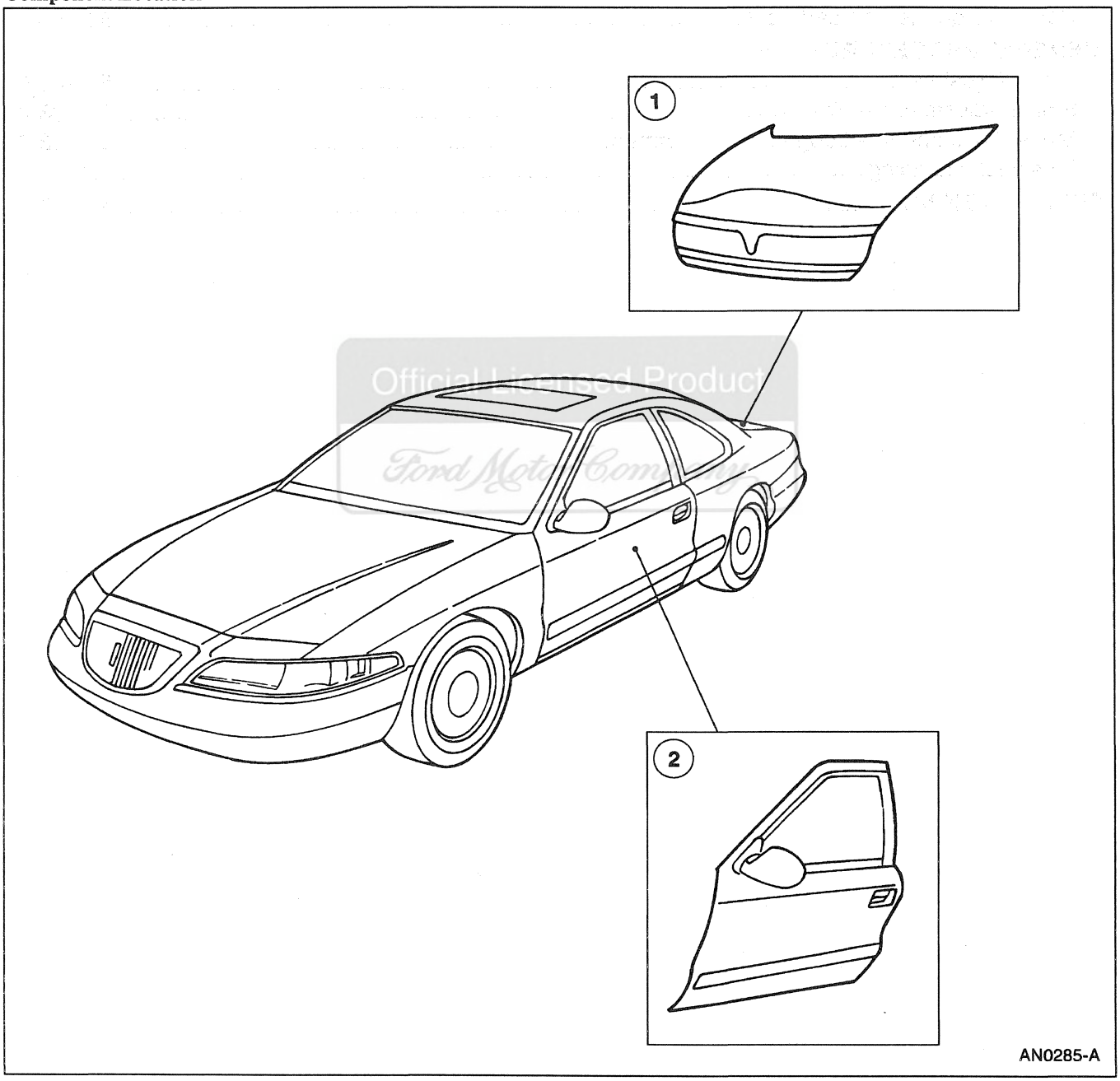

DESCRIPTION AND OPERATION (Continued)

Item	Part Number	Description
1	40110	Luggage Compartment Door
2	20124	Front Door

REMOVAL AND INSTALLATION

Door — Front

Removal

1. Remove the front door trim panel (23942); refer to Section 501-05.
2. Disconnect the electrical connectors in the front door (20124).
3. **NOTE:** Do not scribe the hinge location.
   Mark the hinge location on the door and the vehicle.
4. **NOTE:** Two people are required to support the front door during its removal.
   Remove the front door.
   1 Disconnect the grommet from the front door.
   2 Remove the four front door hinge bolts and the front door.

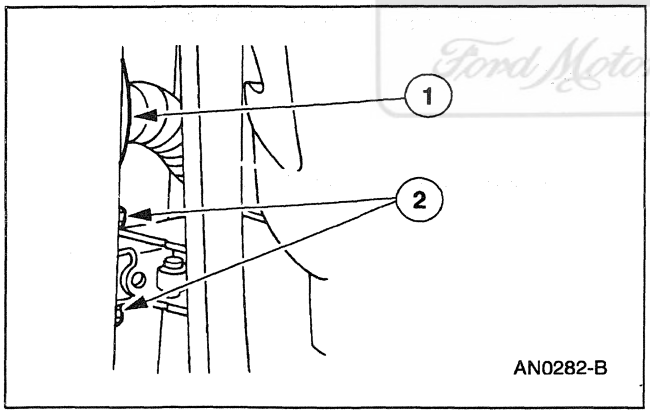

Installation

1. **NOTE:** Feed the wiring harness into the door before installing the front door hinge bolts.
   Install the front door.
   1 Position the front door to the front door upper hinge (22800) and front door lower hinge (22810) and partially tighten the four front door hinge bolts.
   2 Connect the grommet to the front door.

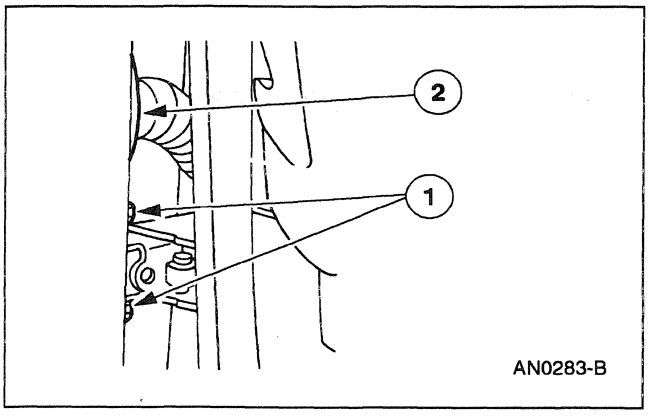

Official Licensed Product
Ford Motor Company

REMOVAL AND INSTALLATION (Continued)

2. Connect the electrical connectors.
3. Install the front door trim panel; refer to Section 501-05.
4. **NOTE:** The door-to-body gap should be minimal and even.

   Inspect the door fit.

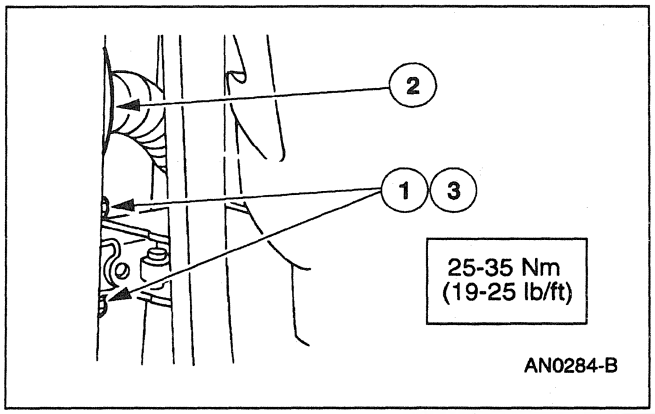

5. Align the front door.
   1 Loosen the four front door hinge bolts.
   2 Move the front door.
   3 Tighten the four front door hinge bolts.

   Check the front door fit. Repeat Steps 1, 2 and 3 until correct fit is reached.

Official Licensed Product
Ford Motor Company

Door — Luggage Compartment

Removal

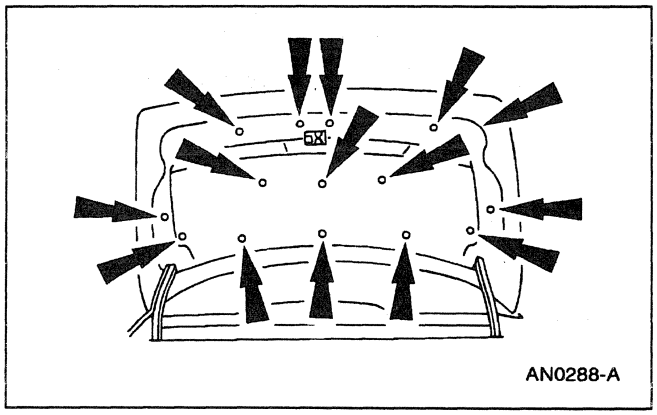

1. Remove the pushpins and the trim.
2. Cover the surrounding body panels.

REMOVAL AND INSTALLATION (Continued)

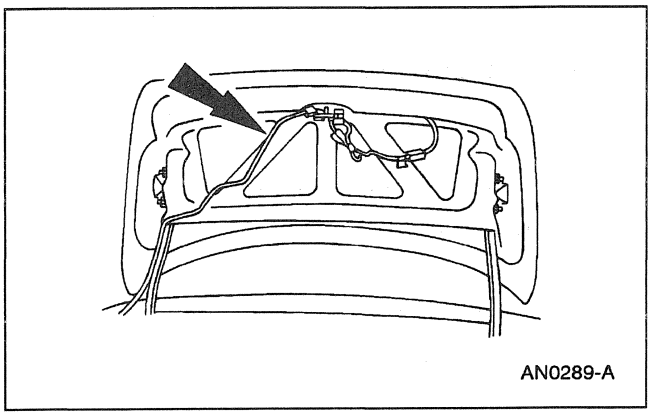

3. Disconnect the electrical harness from the luggage compartment door (40110).

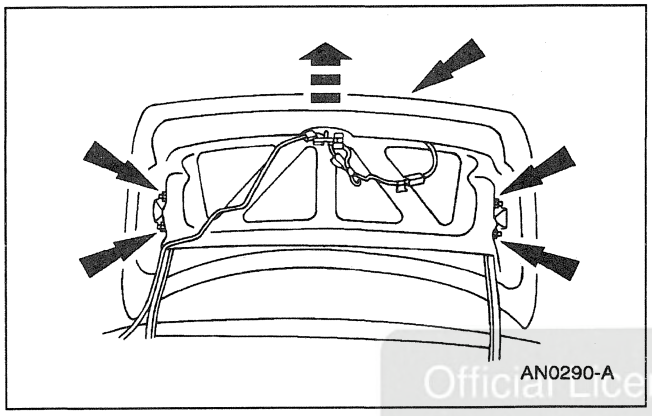

4. Remove the bolts and the luggage compartment door.

Official Licensed Product
Ford Motor Company

Installation

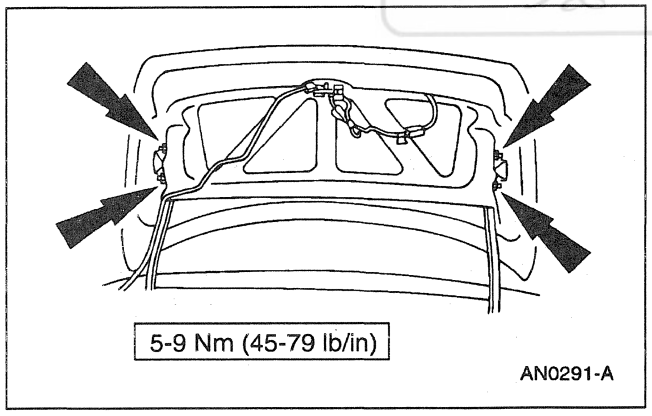

1. Follow the removal procedure in reverse order.

GENERAL PROCEDURES

Hinge Adjustment

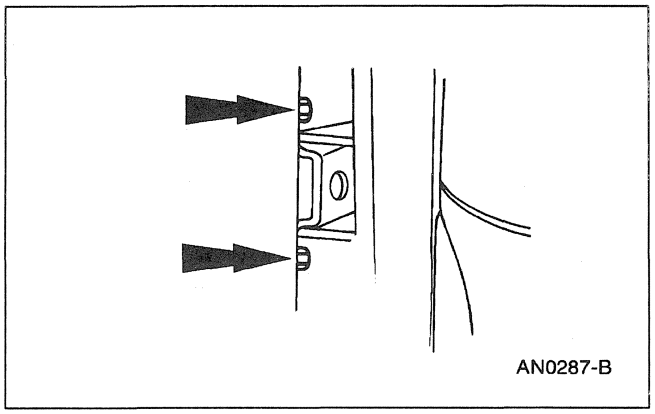

1. Loosen the four front door hinge bolts.

2. Move the front door (20124).

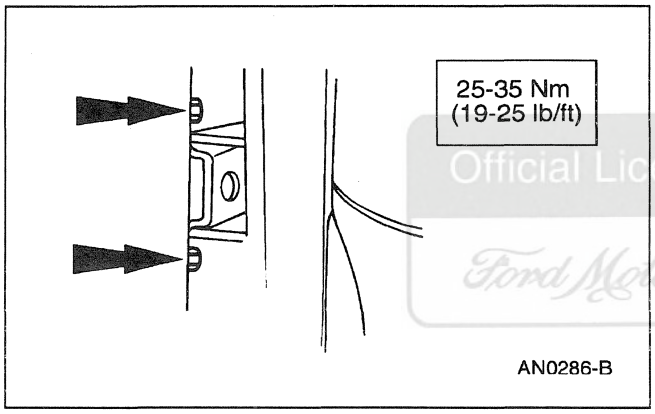

3. Tighten the front door hinge bolts.

Official Licensed Product
Ford Motor Company

Striker Adjustment — Front Door

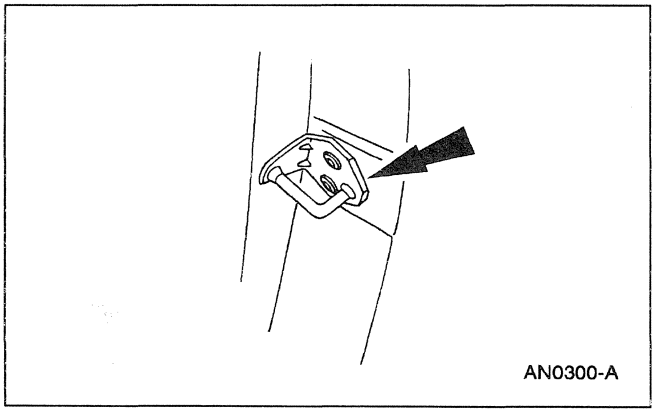

1. **NOTE:** Adjust the door latch striker after the door is properly adjusted. Do not use the door latch striker to align the door.

   Check the striker fit.

   - Clean the latch and the striker and apply a thin coat of dark grease.
   - Open and close the door to produce a measurable pattern in the grease.

GENERAL PROCEDURES (Continued)

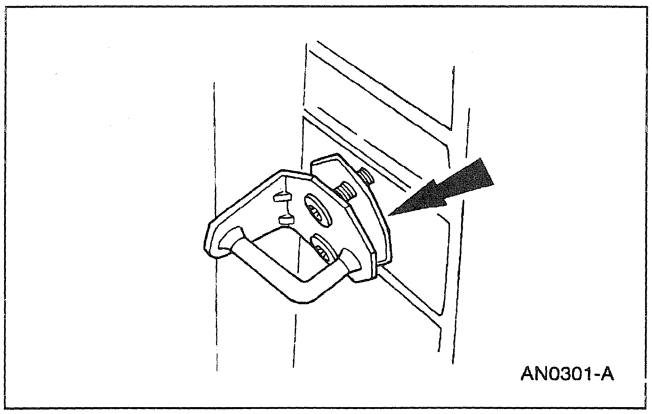

2. Reposition the striker as required.
   - Install no more than two shims between the striker and the B-pillar to adjust the fore and aft clearance.

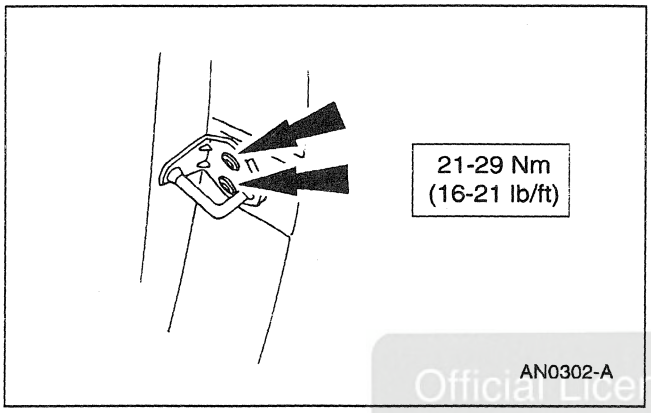

3. Tighten the screws.

Official Licensed Product
Ford Motor Company®

Striker Adjustment — Luggage Compartment

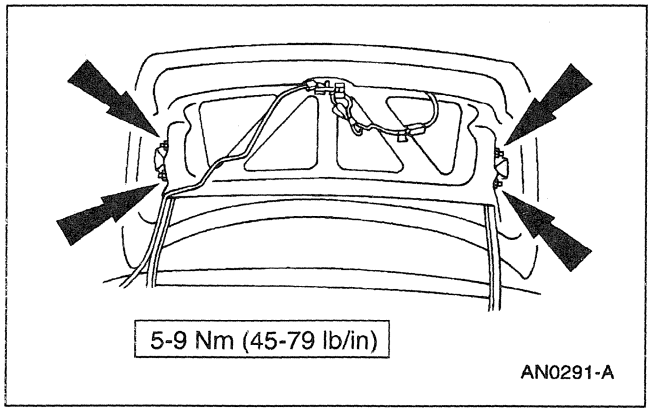

1. Loosen the bolts and raise or lower the luggage compartment door.
   - Adjust the luggage compartment door for an even and parallel fit with the luggage compartment opening and the surrounding panels. Tighten the bolts.

2. Loosen the bolts and adjust the luggage compartment door latch striker.

GENERAL PROCEDURES (Continued)

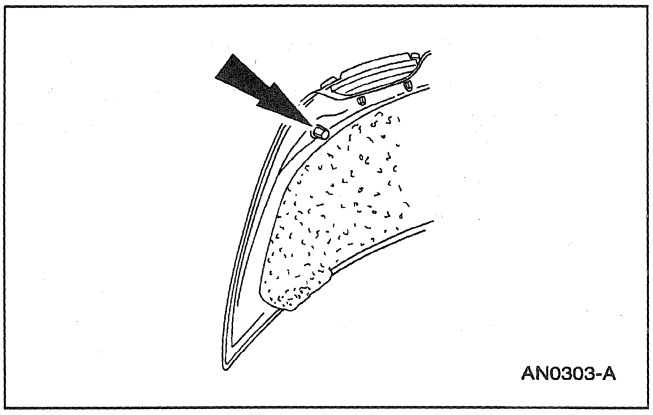

3. Adjust the luggage compartment door bumpers.

Torsion Bar Loading

WARNING: SAFETY GLASSES MUST BE WORN WHEN PERFORMING THIS OPERATION.

1. **NOTE:** The luggage compartment door tension should be decreased if the luggage compartment door opens with more force than desired. The luggage compartment door tension should be increased if the luggage compartment door opens with less force than desired.

   Open and support the luggage compartment door in the full-open position.

2. **WARNING: USE CARE WHEN ADJUSTING LUGGAGE COMPARTMENT DOOR/TAILGATE HINGE TORSION BAR (44891) AS IT IS UNDER TENSION AND COULD SPRING OUT OF CONTROL IF NOT HANDLED PROPERLY.**

   Move the luggage compartment door end of luggage compartment door/tailgate hinge torsion bar to another position.

3. Check the adjustment.

4. **WARNING: USE CARE WHEN ADJUSTING LUGGAGE COMPARTMENT DOOR/TAILGATE HINGE TORSION BAR AS IT IS UNDER TENSION AND COULD SPRING OUT OF CONTROL IF NOT HANDLED PROPERLY.**

   Move the luggage compartment door end of luggage compartment door/tailgate hinge torsion bar to another position.

Official Licensed Reproduction
Ford Motor Company

SPECIFICATIONS

General Specifications

Item	Specification
Lubricants	
Premium Long-Life Grease XG-1-C or XG-1-K	ESA-M1C75-B
Silicone Lubricant C0AZ-19553-A	ESR-M13P4-A
Silicone Lubricant (Spray) D7AZ-19553-AA	ESR-M13P4-A
Multi-Purpose Grease Spray F5AZ-19G209-AA	ESR-M1C159-A

Torque Specifications

Description	Nm	Lb/Ft	Lb/In
Door Hinge Bolts	25-35	19-25	—
Hinge-to-Luggage Compartment Door Bolts	5-9	—	45-79
Door Latch Striker Screws	21-29	16-21	—

Official Licensed Product
Ford Motor Company

SECTION 501-05 Interior Trim and Ornamentation

VEHICLE APPLICATION: Mark VIII

SUBJECT	PAGE
DESCRIPTION AND OPERATION	
Interior Trim	501-05-2
REMOVAL AND INSTALLATION	
Headliner	501-05-10
Trim Panel — Door	501-05-3
Trim Panel — Quarter	501-05-6
SPECIFICATIONS	501-05-12

Official Licensed Product
Ford Motor Company

DESCRIPTION AND OPERATION

Interior Trim

Component Location

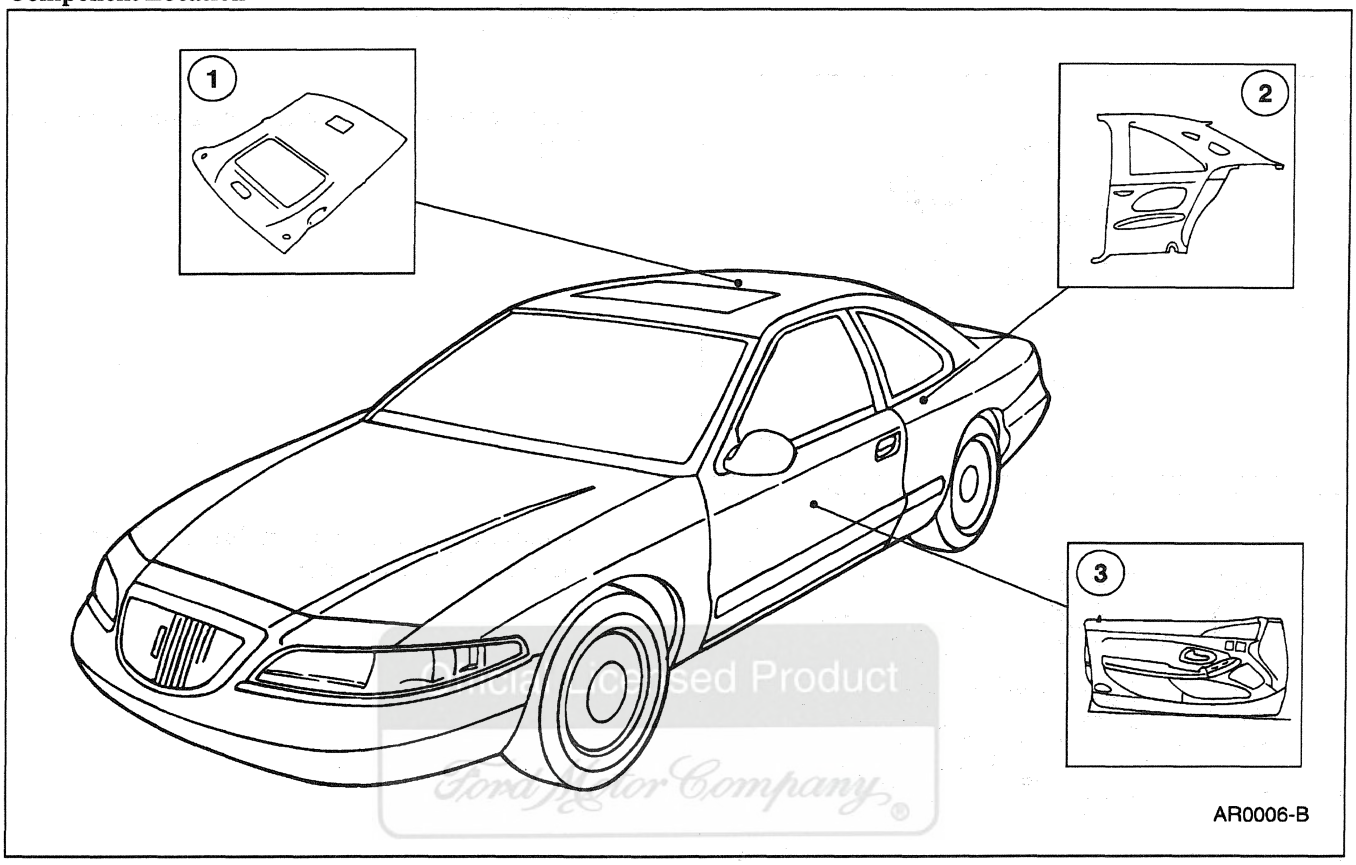

Item	Part Number	Description
1	51916	Roof Headlining
2	31012	Quarter Trim Panel
3	23942	Front Door Trim Panel

The interior trim has the following features:

- The front door trim panels (23942) are covered with either vinyl or carpet.
- The roof headlining (51916) is a one-piece design that covers the entire roof.
- The package tray trim panel (46668) is made of fiber board.
- The floor carpet (13000) is a one-piece design that covers the floor from the instrument panel (04320) to the top of the rear floor riser.
- The luggage compartment trim panels are 7 ounce polo carpet.
- The remaining panels are plastic.
- Many of the interior trim panels use concealed fasteners.
- The universal transmitter is an integral part of the inside visor (04100) and is serviced in Section 419-02.

REMOVAL AND INSTALLATION

Trim Panel — Door

Removal

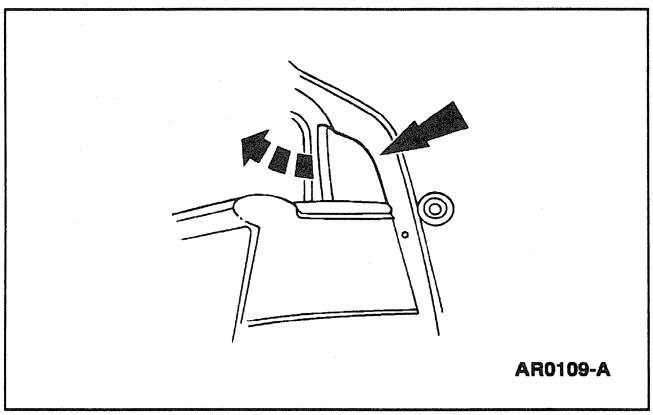
AR0109-A

1. Remove the rear view mirror mounting hole cover (17K709).

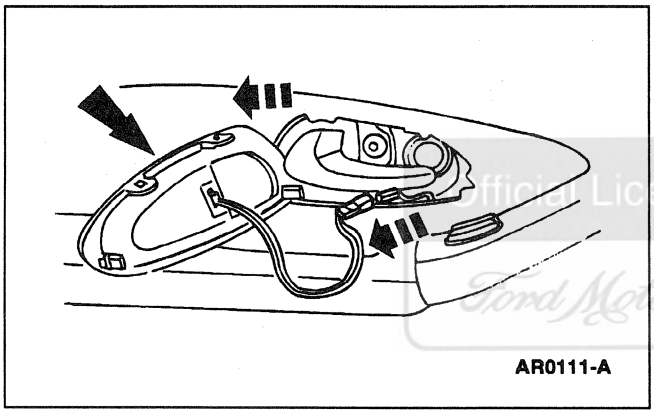
AR0111-A

2. Remove the inside door handle cup (22634) and disconnect the connector.

Official Licensed Product
Ford Motor Company

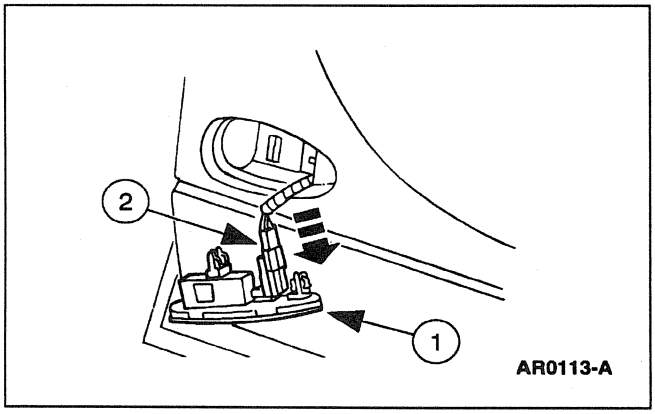

AR0113-A

3. Remove the interior lamp (13776).
   1 Pull the interior lamp out of the front door trim panel (23942).
   2 Disconnect the connector.

REMOVAL AND INSTALLATION (Continued)

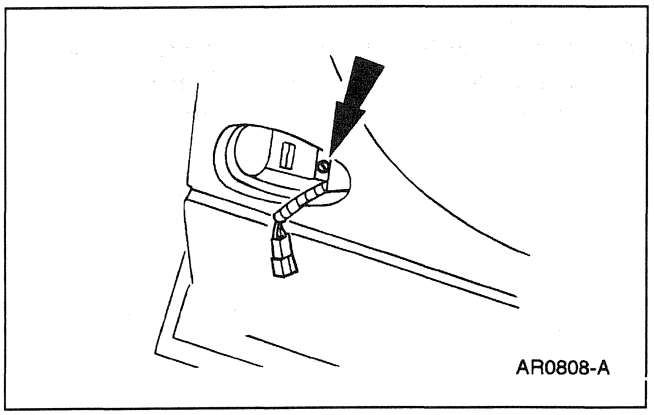

4. Remove the door trim panel attachment screw from the lamp bracket and the door.

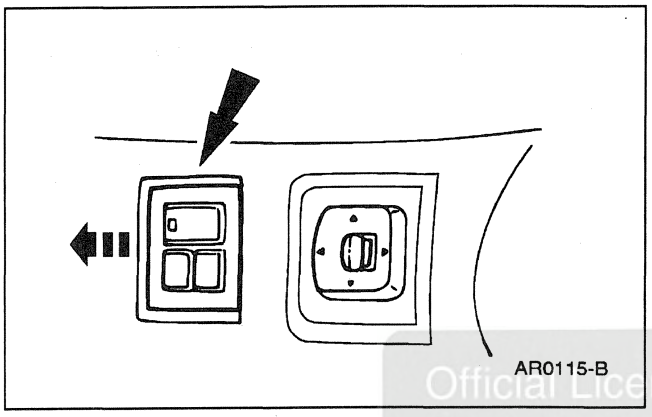

5. Remove the seat regulator control (14776) from the front door trim panel and disconnect the connector.

Official Licensed Product
Ford Motor Company

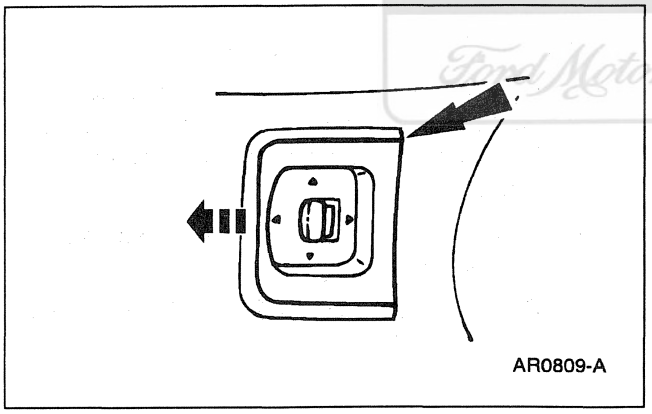

6. Remove the outside rear view mirror control (17B676) from the front door trim panel and disconnect the connector.

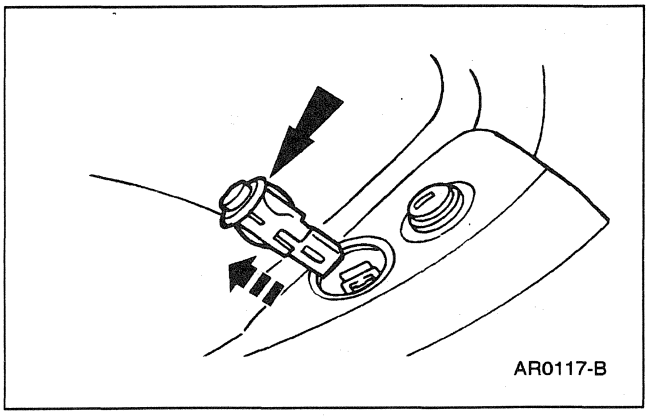

7. Remove the fuel filler door switch from the front door trim panel and disconnect the connector.

REMOVAL AND INSTALLATION (Continued)

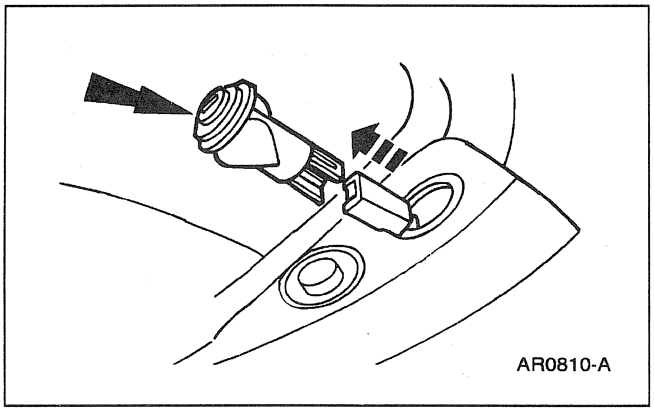

8. Remove the luggage compartment remote control lock switch (19C542) from the front door trim panel and disconnect the connector.

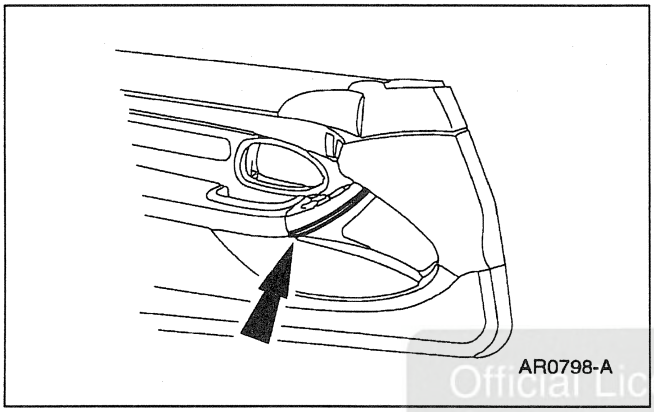

9. Remove the attachment access door and the bolt.

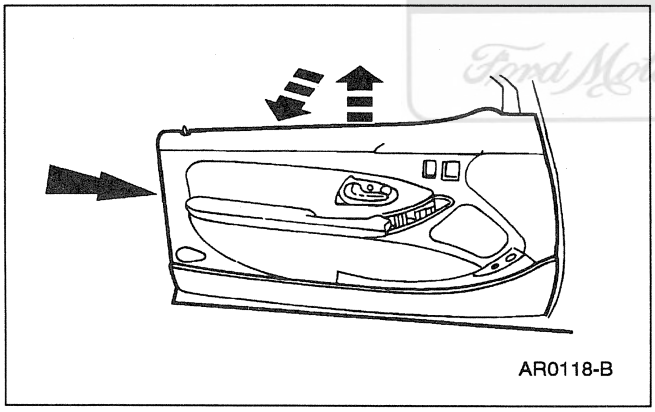

10. Remove the front door trim panel.
    - Disengage the front door trim panel retention hooks from the inner door panel and lift the front door trim panel from the inner door panel.
    - Disconnect the speaker connector and main harness connector.
    - Disconnect the door lock and window switch connections.

Official Licensed Product
Ford Motor Company

Installation

1. **NOTE:** Place the door window in the down position.

   Follow the removal procedure in reverse order.

2. Rock the front door trim panel into the weatherstrip and push downward.

REMOVAL AND INSTALLATION (Continued)

Trim Panel — Quarter

Removal

1. Remove the rear seat back and the cushion; refer to Section 501-10.

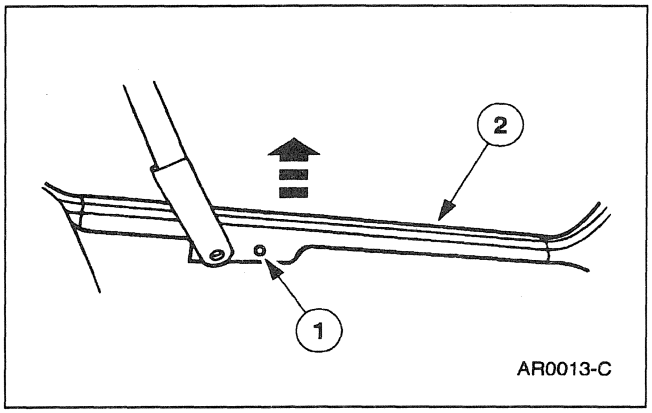

2. Remove the front door scuff plate (13209).
   1 Remove the front door scuff plate screw.
   2 Remove the front door scuff plate.

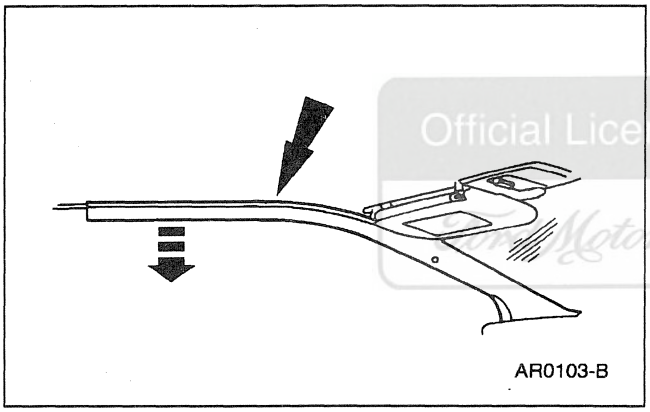

3. Remove the roof side inner front moulding (51752).
   - Remove the roof side inner front moulding.
   - If equipped, disconnect the connector.

Official Licensed Product
Ford Motor Company

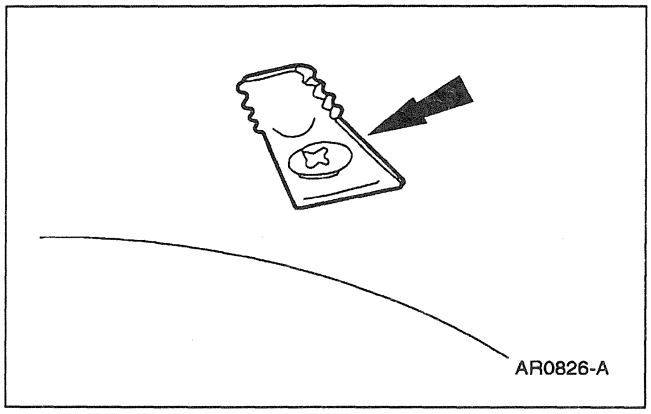

4. Remove the coat hook cover (29024), remove the screw and the coat hook.

REMOVAL AND INSTALLATION (Continued)

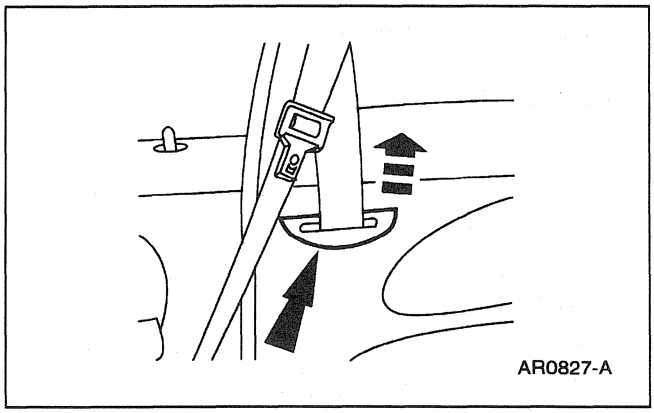

5. Release the bezel.

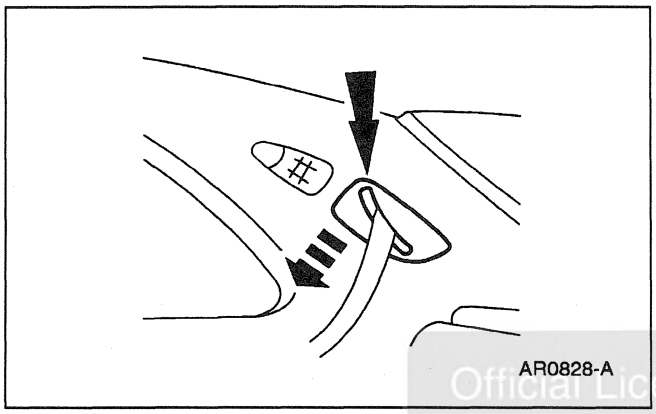

6. Release the bezel.

Official Licensed Product
Ford Motor Company

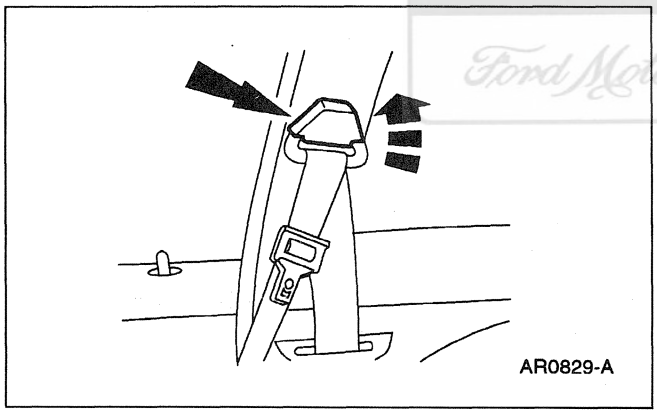

7. Pry open the safety belt trim cover.

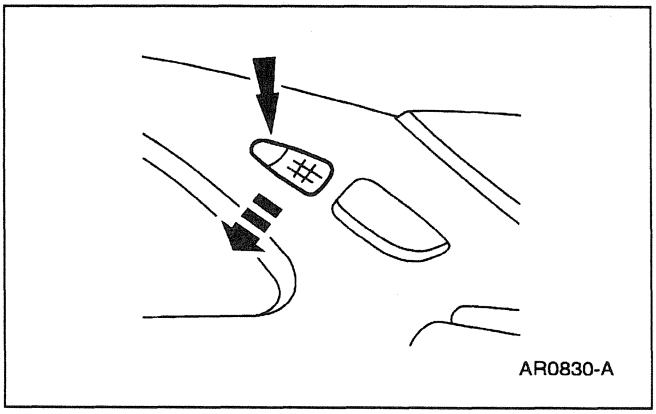

8. Remove and disconnect the lamp from the quarter trim panel (31012).

REMOVAL AND INSTALLATION (Continued)

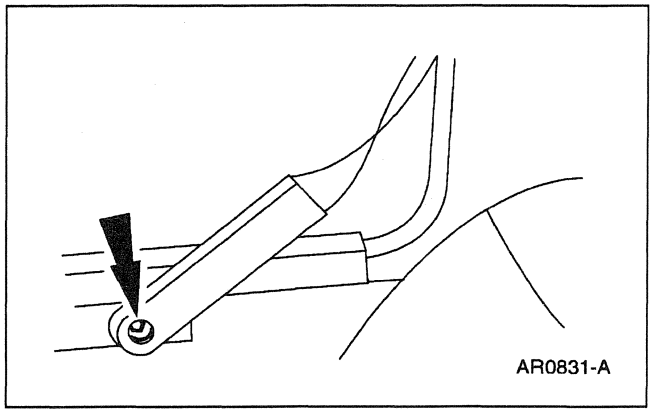

9. Remove the front safety belt retractor and tongue lower bolt.

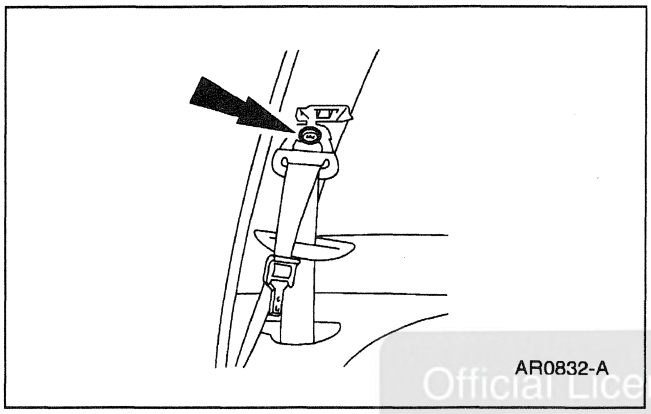

10. Remove the front safety belt retractor and tongue upper bolt.

Official Licensed Product
Ford Motor Company

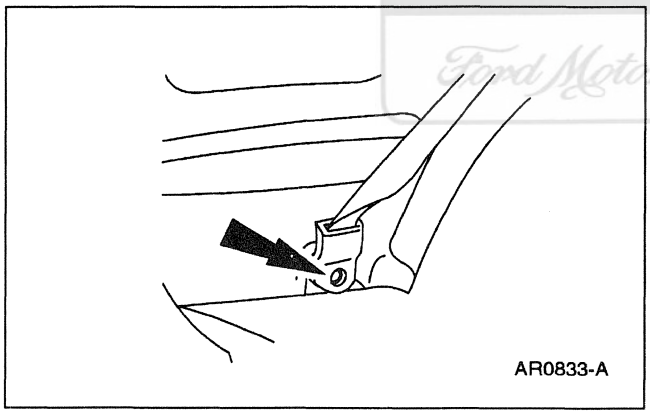

11. Remove the rear safety belt retractor and tongue lower bolt.

REMOVAL AND INSTALLATION (Continued)

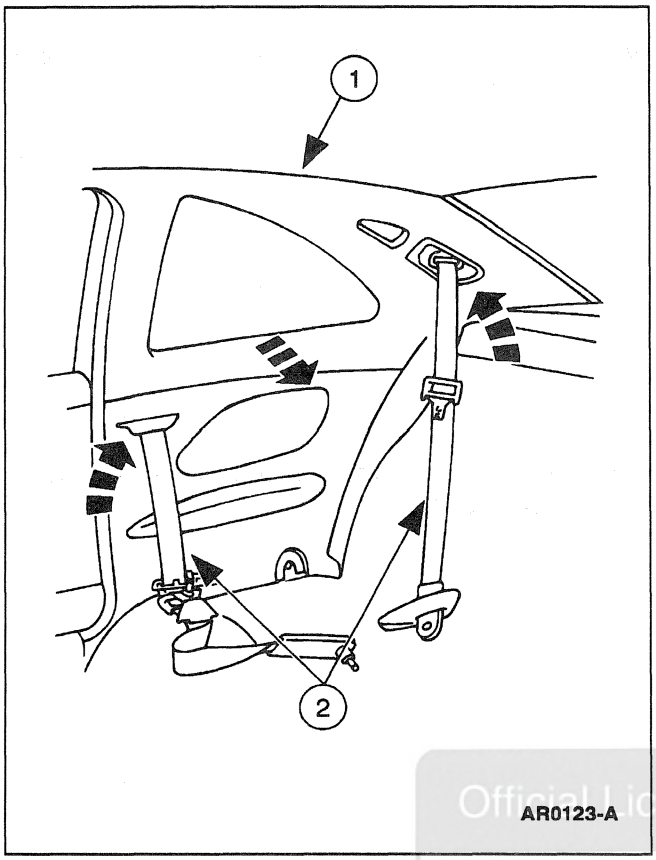

12. Remove the quarter trim panel.
    1 Pull the quarter trim panel away from the body.
    2 Route the safety belt bezels and anchors through the quarter trim panel.

Official Licensed Product
Ford Motor Company

Installation

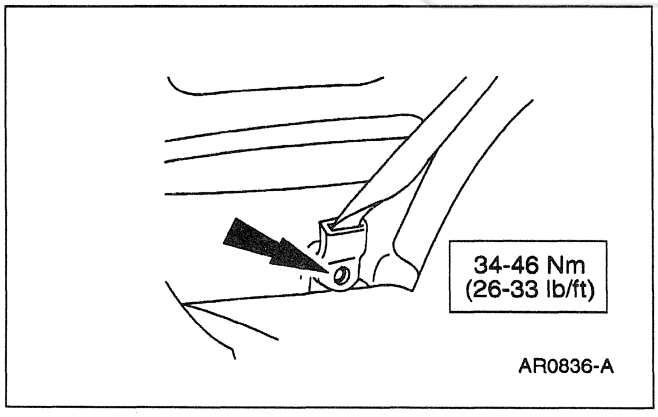

1. Follow the removal procedure in reverse order.

REMOVAL AND INSTALLATION (Continued)

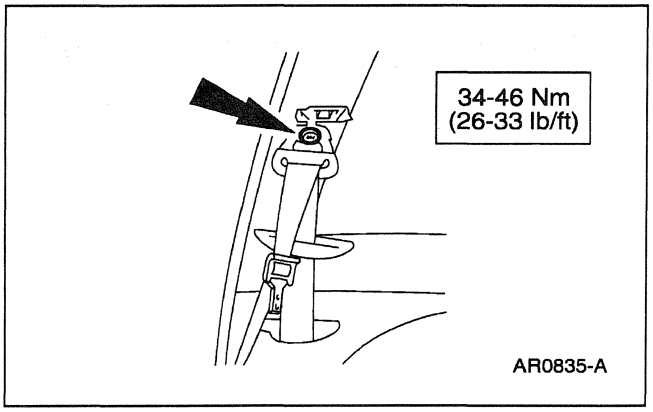

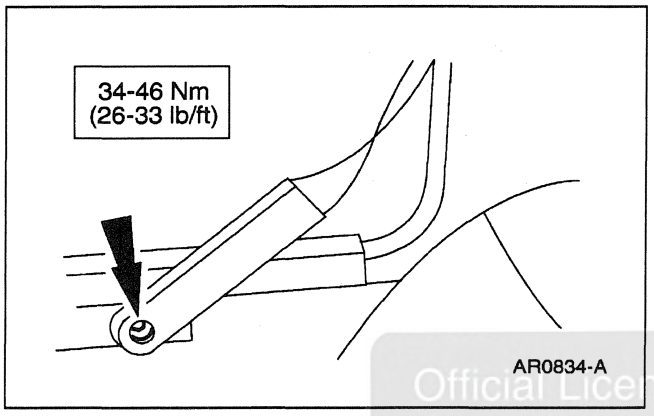

Official Licensed Product
Ford Motor Company

Headliner

Removal

1. Remove the roof console (519A58); refer to Section 501-12.
2. Remove the quarter trim panel (31012); refer to Trim Panel—Quarter in this section.
3. Remove the roof side inner front moulding (51752).
   - Remove the roof side inner front moulding.
   - If equipped, disconnect the connector.

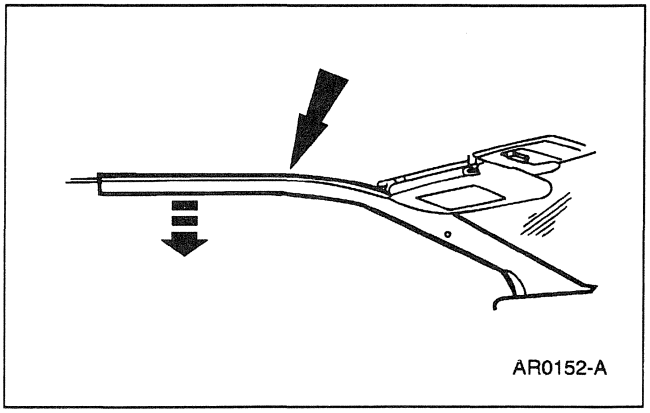

REMOVAL AND INSTALLATION (Continued)

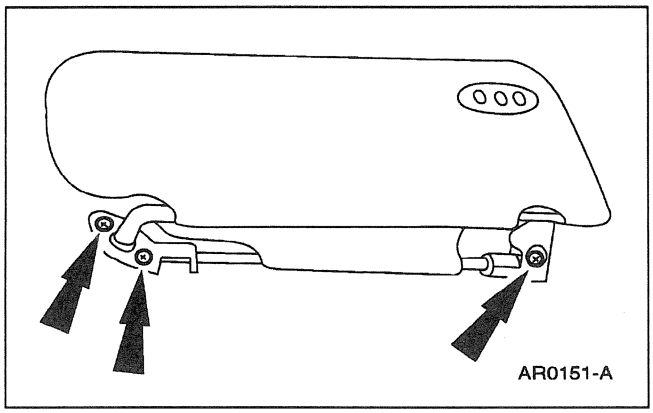
AR0151-A

4. Remove the screws and the inside visor (04100) and disconnect the connector.

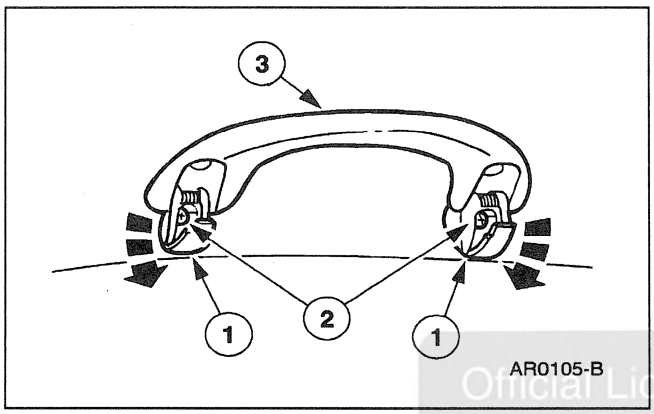

AR0105-B

5. Remove the handle.
   1 Open the trim covers.
   2 Remove the screws.
   3 Remove the handle.

Official Licensed Product
Ford Motor Company

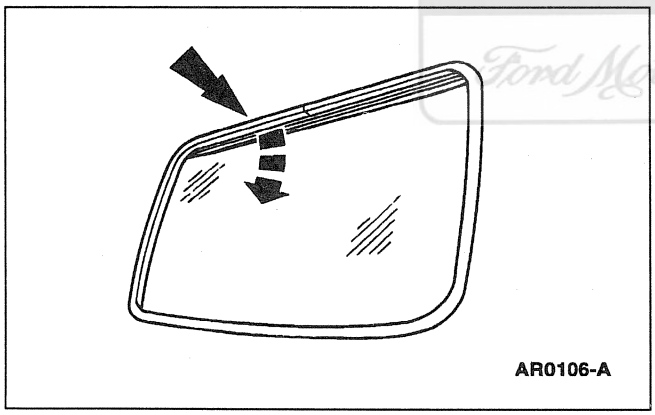
AR0106-A

6. If equipped, remove the sliding roof panel headlining retainer (52124).

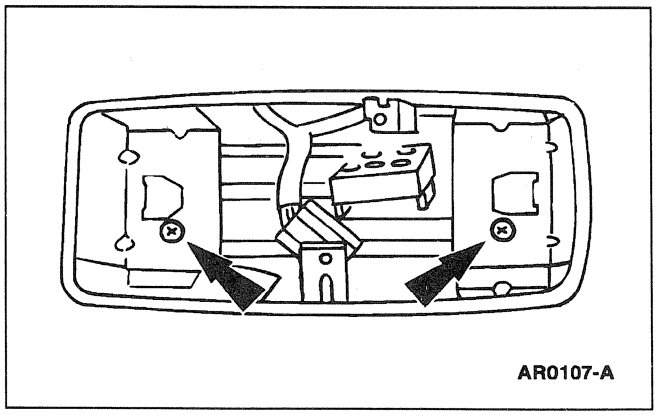
AR0107-A

7. Remove the screws.

REMOVAL AND INSTALLATION (Continued)

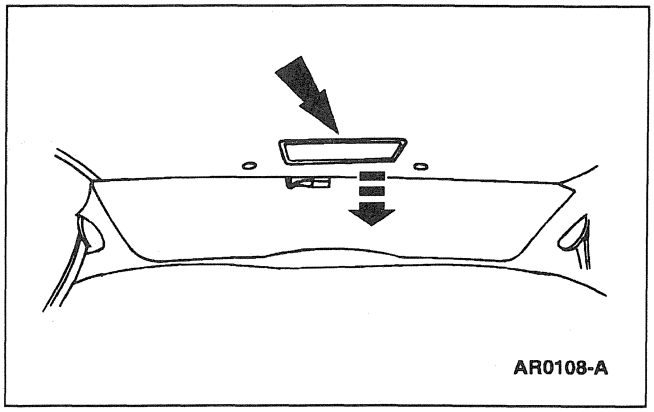

8. If equipped, remove the roof headlining access hole cover (52076).

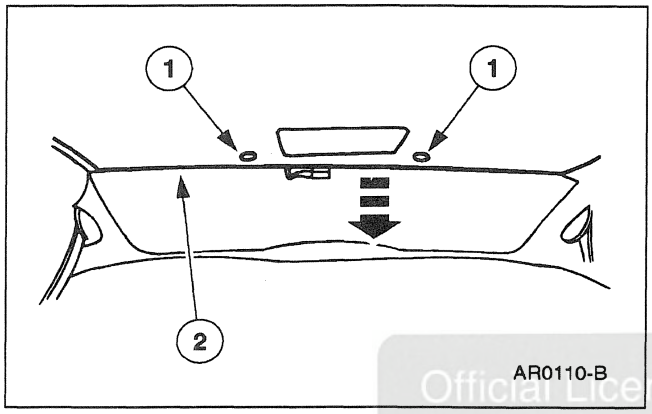

9. Remove the roof headlining (51916).
   1 Remove the pushpins.
   2 Remove the roof headlining.

Official Licensed Product
Ford Motor Company

Installation

1. Follow the removal procedure in reverse order.

SPECIFICATIONS

General Specifications

Item	Specification
Cleaner	
Extra Strength Upholstery Cleaner E8AZ-19523-AA	—
Spot and Stain Remover F3AZ-19521-WA	—
Multi-Purpose Cleaner Concentrate B8A-19523-B	ESR-M14P4-A
Custom Silicone Gloss Polish B7AZ-19530-AA	ESR-M11B26-A

(Continued)

General Specifications

Item	Specification
Deluxe Leather and Vinyl Cleaner F2AZ-19521-WA	ESR-M14P4-A
Ultra-Clear Spray Glass Cleaner E4AZ-19C507-AA	ESR-M14P5-A

Torque Specifications

Description	Nm	Lb/In
Front Safety Belt Retractor and Tongue Upper Bolt	34-46	26-33
Front Safety Belt Retractor and Tongue Lower Bolt	34-46	26-33
Rear Safety Belt Retractor and Tongue Bolt	34-46	26-33

SECTION 501-08 Exterior Trim and Ornamentation

VEHICLE APPLICATION: Mark VIII

SUBJECT	PAGE
DESCRIPTION AND OPERATION	
Exterior Trim and Ornamentation	501-08-2
REMOVAL AND INSTALLATION	
Moulding — Front Door	501-08-3
Moulding — Roof Side	501-08-4
SPECIFICATIONS	501-08-5

Official Licensed Product
Ford Motor Company

DESCRIPTION AND OPERATION

Exterior Trim and Ornamentation

Component Location

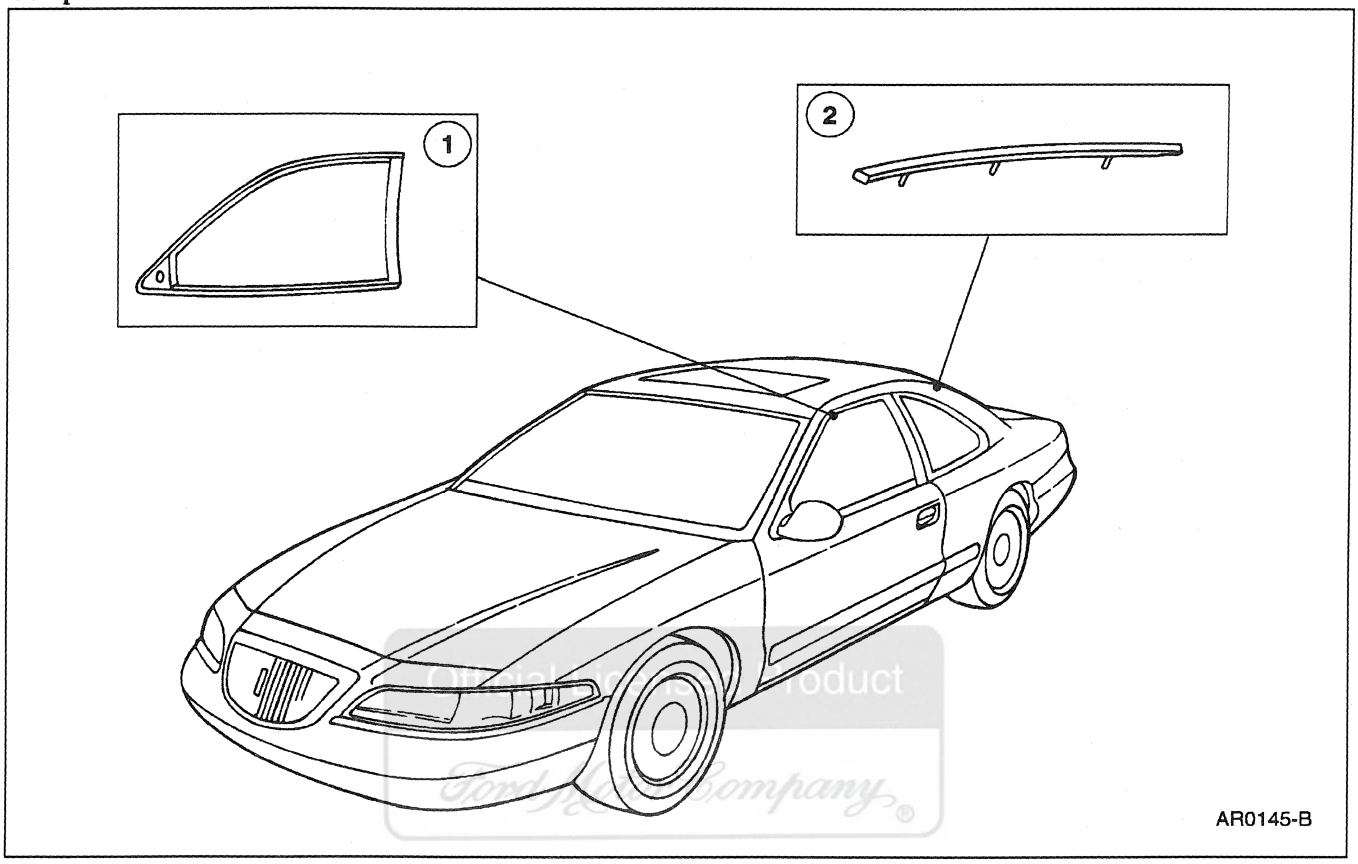

Item	Part Number	Description
1	—	Window Moulding Assy
2	517A73	Roof Side Moulding

The front door base moulding (20938), moulding (29076), front door moulding (20554), emblems and name plate (8A223) are secured to the body with pressure-sensitive tape. The roof side moulding and the radiator grille are retained with fasteners.

Removal and installation of the headlamp bezel is covered in Section 417-01.

REMOVAL AND INSTALLATION

Moulding — Front Door

Removal

1. Remove the outside rear view mirror (17682); refer to Section 501-09.
2. Remove the glass run; refer to Section 501-11.
3. Remove the lower window moulding.

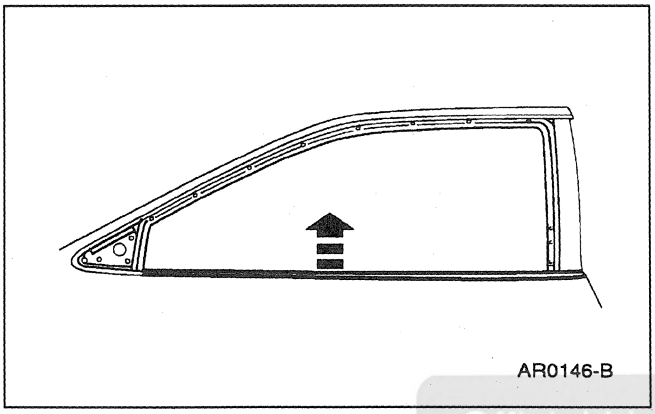
AR0146-B

Official Licensed Product
Ford Motor Company

4. Remove the screws and the edge moulding.

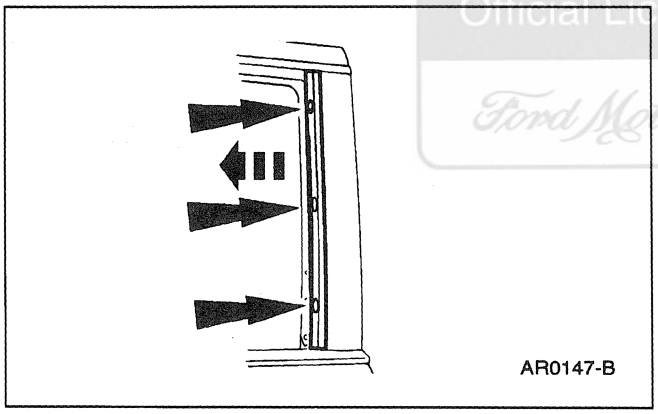
AR0147-B

5. Remove the door moulding by cutting the double-sided tape.

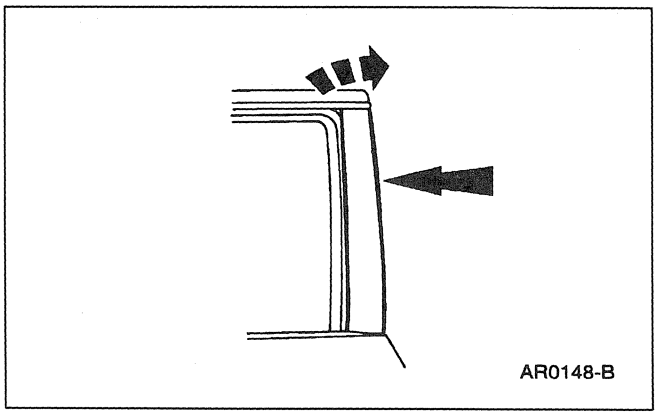
AR0148-B

REMOVAL AND INSTALLATION (Continued)

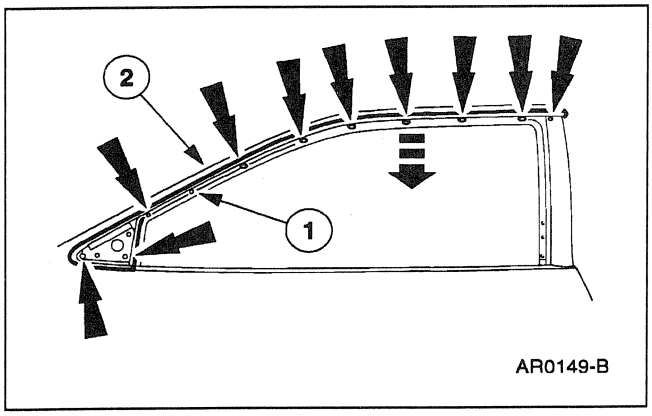

6. Remove the top moulding.
   1 Remove the door moulding screws.
   2 Remove the top moulding.

Installation

1. Follow the removal procedure in reverse order.

Moulding — Roof Side

Removal

Official Licensed Product
Ford Motor Company

1. Remove the quarter trim panel (31012); refer to Section 501-05.

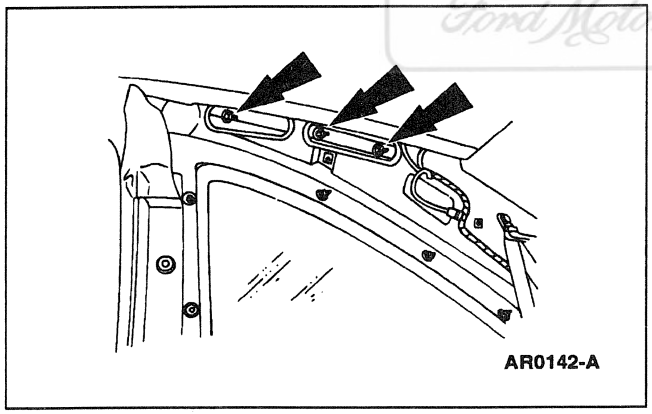

2. Remove the roof side moulding nuts and the moulding assembly.

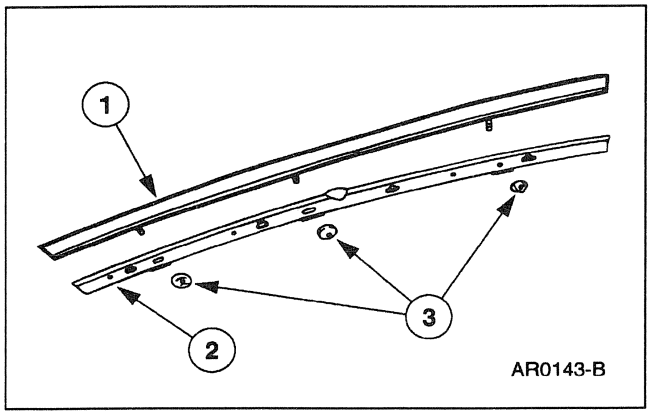

3. Separate the assembly.
   1 Remove the roof outside moulding stud sealers.
   2 Remove the roof spacer.
   3 Remove the roof outside moulding.

REMOVAL AND INSTALLATION (Continued)

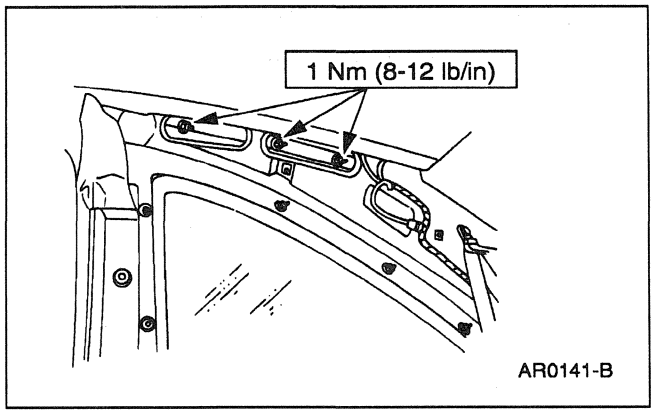

Installation

1. Follow the removal procedure in reverse order.
   - If the moulding is not flush with the roof panel, remove the moulding and install washers between the moulding and the moulding spacers.

SPECIFICATIONS

Torque Specifications

Description	Nm	Lb/In
Roof Side Moulding Nuts	1	8-12

Official Licensed Product
Ford Motor Company

SECTION 501-09 Rear View Mirrors

VEHICLE APPLICATION: Mark VIII

SUBJECT **PAGE**

DESCRIPTION AND OPERATION
Mirrors 501-09-2
DIAGNOSIS AND TESTING
Mirrors 501-09-3
Inspection and Verification 501-09-4
Pinpoint Tests 501-09-9
Symptom Chart 501-09-8
REMOVAL AND INSTALLATION
Mirror — Control 501-09-134
Mirror — Glass, Outside 501-09-130
Mirror — Inside Rear View 501-09-134
Mirror — Lamp and Turn Signal Indicator Assembly 501-09-132
Mirror — Motor 501-09-131
Mirror — Power, Outside Rear View 501-09-128
SPECIFICATIONS 501-09-136

Official Licensed Product
Ford Motor Company

DESCRIPTION AND OPERATION

Mirrors

Component Location

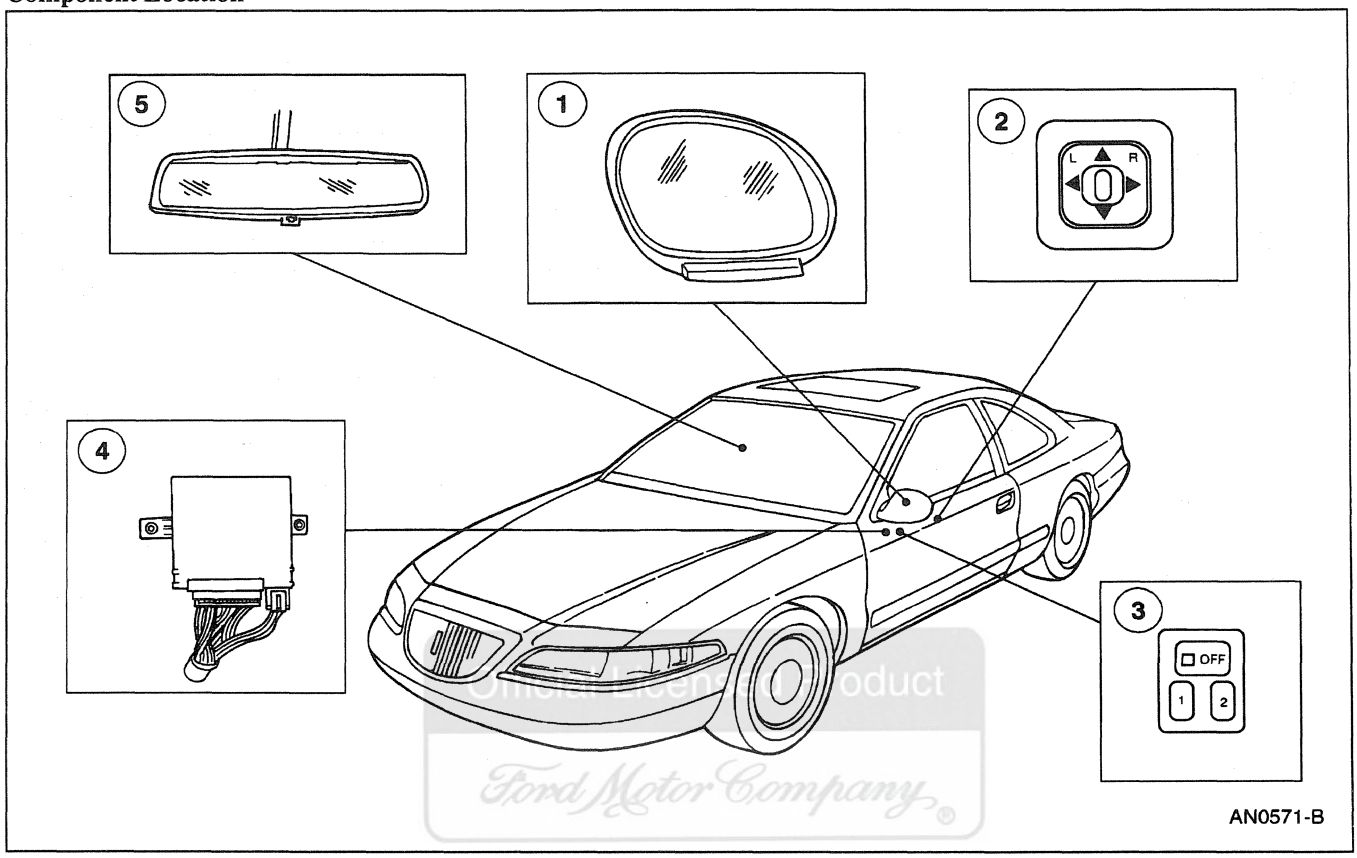

Item	Part Number	Description
1	17D696	Outside Rear View Mirror Motor
2	17B676	Outside Rear View Mirror Control

(Continued)

Item	Part Number	Description
3	—	Memory OFF/RECALL Switch
4	13C791	Driver Door Module
5	17700	Inside Rear View Mirror

Mirror, Outside Rear View Power

The outside rear view mirrors (17682) have the following features:

- electrical operation.
- heating.
- are available with automatic dimming.
- are controlled by the outside rear view mirror control (17B676) which is located on the front door trim panel (23942).
- housing for the ground illumination lamps.
- housing for the auxiliary turn signal indicators.

Mirror—Inside Rear View

Automatic Dimming

The inside rear view mirror (17700) :

- is equipped with an automatic dimming feature that controls the inside rear view mirror and the LH outside rear view mirror if equipped.
- houses two sensors to determine dimmer actuation.

DESCRIPTION AND OPERATION (Continued)

- defaults to normal setting when the transmission is shifted to REVERSE to allow a bright view for backing up.
- houses an ON-OFF button for the automatic dimming feature.

Memory Mirror

The memory mirror:

- position is stored in the driver seat module.
- automatically repositions upon entry by one of the following procedures:
  - — keyless entry remote transmitter with lockout set to 1 or 2.
  - — keyless entry keypad code stored to position 1 or 2.
  - — pressing memory off/recall switch 1 or 2.

The driver door module sends a message to the driver seat module to restore the last mirror position stored for driver 1 or driver 2.

- recall positioning is cancelled by any of the following actions:
  - — pressing the OFF button on the memory off/recall switch.
  - — pressing the outside rear view mirror motor (17D696).
  - — adjusting the driver seat using the seat regulator control switch (14A701).
  - — operating the steering column tilt/telescope adjustment switch on the multi-function switch (13K359).

The driver seat and steering column tilt/telescope memory recall adjustments will also be cancelled if in motion.

- automatically saves new mirror position to driver 1 or driver 2 if the vehicle was entered using a recognized driver 1 or driver 2 entry procedure. The new position will be saved after two seconds and the message center indicator module will read DRIVER 1 (or 2) SETTINGS SAVED to alert driver of new setting.

Reverse Drive Rear View Mirrors

The reverse drive rear view mirror function:

- tilts the outside rear view mirror motor down to improve visibility of the rear bumper area.
- is operated by the driver seat module.
- can be disabled under Driver Settings Menu on the message center indicator module.

When the reverse drive rear view mirror function is enabled:

- the driver outside rear view mirror motor tilts down three degrees and the passenger outside rear view mirror motor tilts down five and a half degrees when the ignition switch is in RUN and REVERSE is selected.
- the outside rear view mirror motor will return to the original setting when shifted out of REVERSE.
- pressing the outside rear view mirror control will cancel the reverse tilt or the automatic mirror position return if operating.
- if the transmission is shifted out of REVERSE and then back into REVERSE within ten seconds, the driver seat module will delay the reverse tilt operation for five seconds.

Official Licensed Product Ford Motor Company

DIAGNOSIS AND TESTING

Mirrors

Refer to Electrical and Vacuum Troubleshooting Manual, Cell 124, Power Memory Mirrors for schematic and connector information.

Refer to Electrical and Vacuum Troubleshooting Manual, Cell 57, Driver Door Module for schematic and connector information.

Refer to Electrical and Vacuum Troubleshooting Manual, Cell 123, Power Memory Seats for schematic and connector information.

Refer to Electrical and Vacuum Troubleshooting Manual, Cell 56, Rear Window Defrost/Heated Mirrors for schematic and connector information.

DIAGNOSIS AND TESTING (Continued)

Refer to Electrical and Vacuum Troubleshooting Manual, Cell 125, Electronic Day/Night Mirror for schematic and connector information.

Special Tool(s)

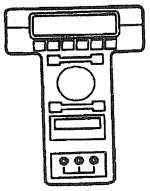 ST1217-A	New Generation Star (NGS) Tester 418-F048 (007-00500) or equivalent
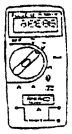 ST1137-A	73 Digital Multimeter 105-R0051 or equivalent

Inspection and Verification

1. Verify the customer's concern by operating the rear view mirrors to duplicate the concern.
2. Inspect the components of the rear view mirror systems to determine if any of the following mechanical or electrical concerns apply:

Visual Inspection Chart

Mechanical	Electrical
• Damaged outside rear view mirrors. • Damaged inside rear view mirror.	• Open fuse junction panel fuse: — Fuse 41 (10A), 35 (10A), 28 (10A), 30 (10A), 4 (10A) or 34 (15A) • Power distribution box: — Fuse 28 (30A), 19 (30A) or 24 (40A) • Damage to wiring harness. • Loose or corroded connections. • Damaged outside rear view mirror control.

3. If the inspection reveals obvious concerns that can be readily identified, repair as required.
4. If the concern remains after the inspection, connect the Rotunda New Generation Star (NGS) Tester to the data link connector (DLC) located beneath the instrument panel and select the vehicle to be tested from the NGS menu. If the NGS does not communicate with the vehicle:
   - check that the program card is properly installed.
   - check the connections to the vehicle.
   - check the ignition switch position.

   If the NGS still does not communicate with the vehicle, refer to the New Generation Star Tester manual.
5. Perform the DATA LINK DIAGNOSTIC TEST using the NGS. If the NGS responds with:
   - CKT 914 and CKT 915 = ALL MODULES NO RESPONSE/NOT EQUIPPED, go to Communication System Diagnostics in Section 418-00 to diagnose network concern.
   - NO RESPONSE/NOT EQUIPPED for driver door module (DDM), go to Pinpoint Test D.
   - NO RESPONSE/NOT EQUIPPED for driver seat module (DSM), go to Pinpoint Test E.
   - SYSTEM PASSED for the DDM, retrieve and record the continuous diagnostic trouble codes (DTCs), erase the continuous DTCs, then execute Self Test Diagnostics for the DDM.
   - SYSTEM PASSED for the DSM, retrieve and record the continuous diagnostic trouble codes (DTCs), erase the continuous DTCs, then execute Self Test Diagnostics for the DSM.
6. If the DDM DTCs retrieved are related to the concern, go to the Driver Door Module (DDM) Diagnostic Trouble Code (DTC) Index to continue diagnostics.

   If the DSM DTCs retrieved are related to the concern, go to the Driver Seat Module (DSM) Diagnostic Trouble Code (DTC) Index to continue diagnostics.
7. If no DTCs related to the concern are retrieved, go to the Symptom Chart to continue diagnostics.

DRIVER DOOR MODULE (DDM) DIAGNOSTIC TROUBLE CODE (DTC) INDEX

DTC	Description	DTC caused by	Action To Take
B1322	Door Ajar LF Circuit Short to Ground	DDM	GO to Section 417-02.
B1342	ECU Defective	DDM	GO to DTC B1342.

(Continued)

DIAGNOSIS AND TESTING (Continued)

DRIVER DOOR MODULE (DDM) DIAGNOSTIC TROUBLE CODE (DTC) INDEX

DTC	Description	DTC caused by	Action To Take
B1396	Power Door Lock Circuit Short to Battery	DDM	GO to Section 501-14B.
B1525	Keyless Entry Circuit Short to Battery	DDM	GO to Section 501-14B.
B1529	Memory Set Switch Circuit Short to Battery	DDM	GO to DTC B1529.
B1539	Mirror Driver Switch Assembly Circuit Failure	DDM	GO to DTC B1539.
B1549	Power Window Master Circuit Short to Battery	DDM	GO to Section 501-11.
B1554	Luggage Compartment Door Release Circuit Short to Ground	DDM	GO to Section 501-14A.
B1676	Battery Voltage Out of Range	DDM	GO to Section 501-14B.
U1041	SCP Invalid or Missing Data for Vehicle Speed	ABS	GO to Section 206-09, Inspection and Verification to continue diagnosis.
U1059	SCP Invalid or Missing Data for Transmission/Transaxle/PRNDL	PCM	REFER to the Powertrain Control/Emissions Diagnosis Manual [1].
U1117	SCP Invalid or Missing for Electrical Energy Management	SCIL	GO to Section 501-11, Inspection and Verification to continue diagnosis.
U1135	SCP Invalid or Missing Data for Ignition Switch/Starter	SCIL	GO to Section 501-12, Inspection and Verification to continue diagnosis.
U1196	SCP Invalid or Missing Data for Door Locks	SCIL	GO to Section 419-01A, Inspection and Verification to continue diagnosis.
U1199	SCP Invalid or Missing Data for External Access (Doors)	SCIL	GO to Section 417-02, Inspection and Verification to continue diagnosis.

DRIVER DOOR MODULE (DDM) PARAMETER IDENTIFICATION (PID) INDEX

Display	Description	PID Content
CCNT__DD	Number of Continuous DTCs on DDM	one count per bit
KEYCODE	Keyless Entry Factory Code	5 digit no. encoded, INVLD
D__DR__DD	Driver Door Ajar Switch	AJAR CLOSED
DLIDRLS	Deck Lid Release Switch	ON OFF
D__PW__SW	Driver Power Window Switch	UP DOWN OFF SHORT
OTD__SW	One Touch Down Switch	OFF DOWN
DR__LOCK	Door Lock Output State	SHORT LOCK UNLOCK OFF
D__WINDO	Driver Front Window	DOWN notDWN
MEM__OFF	Memory Off Switch	ACTIVE notACT
MEM2__SW	Memory Recall Switch #2	OFF ON
MEM1__SW	Memory Recall Switch #1	OFF ON
MIR__SEL	Power Mirror Select Switch	PSSNGR DRIVER
MIRV__SW	Power Mirror Position Switch - Vertical	SHORT DOWN UP OFF
MIRH__SW	Power Mirror Position Switch - Horizontal	SHORT RIGHT LEFT OFF
KEY__PAD	Keyless Entry Switch	1, 3, 5, 7, 9

1 Can be purchased as a separate item.

DIAGNOSIS AND TESTING (Continued)

DRIVER DOOR MODULE (DDM) ACTIVE COMMAND INDEX

Active Command	Display	Function
PID Latch	PID LATCH	ON OFF
Memory Seat LED Control	LED STATE	ON OFF
Keypad Backlighting	LIGHT	ON OFF

(Continued)

DRIVER DOOR MODULE (DDM) ACTIVE COMMAND INDEX

Active Command	Display	Function
Front Window Control	DD DOWN	ON OFF
Door Lock Control	LOCK UNLOCK DD UNLOCK	ON OFF ON OFF ON OFF

DRIVER SEAT MODULE (DSM) DIAGNOSTIC TROUBLE CODE (DTC) INDEX

DTC	Description	DTC caused by	Action to Take
B1342	ECU Defective	DSM	GO to Section 501-10.
B1462	Drivers Safety Belt Switch Circuit Failure	DSM	GO to Section 413-08.
B1597	Drivers Seat Seatback Autoglide Forward Switch Circuit Short to Ground	DSM	GO to Section 501-10.
B1676	Battery Voltage Out of Range	DSM	GO to Section 501-10.
B1703	Seat Driver Recline Forward Switch Circuit Short to Battery	DSM	GO to Section 501-10.
B1707	Seat Driver Recline Rearward Switch Circuit Short to Battery	DSM	GO to Section 501-10.
B1711	Seat Driver Front Up Switch Circuit Short to Battery	DSM	GO to Section 501-10.
B1715	Seat Driver Front Down Switch Circuit Short to Battery	DSM	GO to Section 501-10.
B1719	Seat Driver Forward Switch Circuit Short to Battery	DSM	GO to Section 501-10.
B1723	Seat Driver Rearward Switch Circuit Short to Battery	DSM	GO to Section 501-10.
B1727	Seat Driver Rear Up Switch Circuit Short to Battery	DSM	GO to Section 501-10.
B1731	Seat Driver Rear Down Switch Circuit Short to Battery	DSM	GO to Section 501-10.
B1950	Seat Rear Up/Down Potentiometer Feedback Circuit Failure	DSM	GO to Section 501-10.
B1954	Seat Front Up/Down Potentiometer Feedback Circuit Failure	DSM	GO to Section 501-10.
B1958	Seat Recline Forward/Backward Potentiometer Feedback Circuit Failure	DSM	GO to Section 501-10.
B1962	Seat Horizontal Forward/Backward Potentiometer Feedback Circuit Failure	DSM	GO to Section 501-10.
B1986	Driver's Seat Seatback Autoglide Rearward Switch Circuit Failure	DSM	GO to Section 501-10.
B2312	Mirror Passenger Horizontal Feedback Potentiometer Circuit Failure	DSM	GO to DTC B2312.
B2316	Mirror Passenger Vertical Feedback Potentiometer Circuit Failure	DSM	GO to DTC B2316.
B2320	Mirror Driver Horizontal Feedback Potentiometer Circuit Failure	DSM	GO to DTC B2320.

(Continued)

Official Licensed Product Ford Motor Company

DIAGNOSIS AND TESTING (Continued)

DRIVER SEAT MODULE (DSM) DIAGNOSTIC TROUBLE CODE (DTC) INDEX

DTC	Description	DTC caused by	Action to Take
B2324	Mirror Driver Vertical Feedback Potentiometer Circuit Failure	DSM	GO to DTC B2324.
U1059	SCP Invalid or Missing Data for Transmission/Transaxle/PRNDL	PCM	REFER to the Powertrain Control/Emissions Diagnosis Manual [2].
U1117	SCP Invalid or Missing for Electrical Energy Management	SCIL	GO to Section 501-11, Inspection and Verification to continue diagnosis.
U1135	SCP Invalid or Missing Data for Ignition Switch/Starter	SCIL	GO to Section 501-12, Inspection and Verification to continue diagnosis.
U1180	SCP Invalid or Missing Data for Personalization (Memory) Features	DDM	GO to Pinpoint Test C.
U1181	SCP Invalid or Missing Data for Personalization (Memory) Features	DDM	GO to DTC U1181.
U1194	SCP Invalid or Missing Data for Mirrors	DDM	GO to Pinpoint Test C.
U1199	SCP Invalid or Missing Data for External Access (Doors)	DDM/ SCIL	GO to Section 417-02, Inspection and Verification to continue diagnosis.

DRIVER SEAT MODULE (DSM) PARAMETER IDENTIFICATION (PID) INDEX

Display	Description	PID Value
CCNT__DS	Number of Continuous DTCs on DSM	one count per bit
D__SBELT	Driver Front Seat Belt	IN OUT
PMIR__H	Passengers Mirror Horizontal	SENSED NOTSEN
PMIR__V	Passengers Mirror Vertical	SENSED NOTSEN
DMIR__H	Drivers Mirror Horizontal	SENSED NOTSEN
DMIR__V	Drivers Mirror Vertical	SENSED NOTSEN
SRCL__MT	Drivers Seat Recline Motor	SENSED NOTSEN
SFWD__MT	Drivers Seat Forward Motor	SENSED NOTSEN
SREARMT	Drivers Seat Rear Motor	SENSED NOTSEN
SFNT__MT	Drivers Seat Front Motor	SENSED NOTSEN
SRCL__SW	Power Seat Switch - Recline	SHORT RWD FWD OFF
SFWD__SW	Power Seat Switch - Forward/Rearward	SHORT RWD FWD OFF
SREARSW	Power Seat Switch - Rear	SHORT UP DOWN OFF
SFNT__SW	Power Seat Switch - Front	SHORT UP DOWN OFF
AGLIDEF	Autoglide Forward Switch	ACTIVE notACT
AGLIDER	Autoglide Rearward Signal	ACTIVE notACT

DRIVER SEAT MODULE (DSM) ACTIVE COMMAND INDEX

Active Command	Display	Function
PID Latch	PID LATCH	ON OFF
Driver's Seat Control	FRONT UP	ON OFF
	FRONT DOWN	ON OFF
	REAR UP	ON OFF

(Continued)

DRIVER SEAT MODULE (DSM) ACTIVE COMMAND INDEX

Active Command	Display	Function
	REAR DWN	ON OFF
	HORZ FWD	ON OFF
	HORZ BWD	ON OFF
	RECL FWD	ON OFF
	RECL BWD	ON OFF

(Continued)

2 Can be purchased as a separate item.

DIAGNOSIS AND TESTING (Continued)

DRIVER SEAT MODULE (DSM) ACTIVE COMMAND INDEX

Active Command	Display	Function
Power Mirror Control	DR UP	ON OFF
	DR DOWN	ON OFF
	DR LEFT	ON OFF
	DR RIGHT	ON OFF
	PR UP	ON OFF
	PR DOWN	ON OFF
	PR LEFT	ON OFF
	PR RIGHT	ON OFF

Symptom Chart

Refer to the Electrical and Vacuum Troubleshooting Manual for connector numbers cited in the pinpoint tests.

SYMPTOM CHART

Condition	Possible Source	Action
• No Communication With Driver Door Module	• Driver door module. • Circuitry.	• GO to Pinpoint Test D.
• No Communication to Driver Seat Module	• Driver seat module. • Circuitry.	• GO to Pinpoint Test E.
• The Mirrors Are Inoperative	• Driver door module. • Driver seat module. • Outside rear view mirror control. • Circuitry.	• GO to Pinpoint Test F.
• A Single Mirror Is Inoperative	• Driver door module. • Driver seat module. • Outside rear view mirror control. • Circuitry.	• GO to Pinpoint Test G.
• A Single Mirror Is Inoperative—Vertically	• Driver door module. • Driver seat module. • Outside rear view mirror control. • Circuitry.	• GO to Pinpoint Test H.
• A Single Mirror Is Inoperative—Horizontally	• Driver door module. • Driver seat module. • Outside rear view mirror control. • Circuitry.	• GO to Pinpoint Test J.
• The Auto Dimming Mirror Does Not Operate Properly	• Inside rear view mirror. • Outside rear view mirror glass. • Circuitry.	• GO to Pinpoint Test K.
• The Memory Mirror Is Inoperative	• Driver door module. • Driver seat module. • Memory off/recall switch. • Circuitry.	• GO to Pinpoint Test L.
• The Heated Outside Mirror Does Not Defrost	• Outside rear view mirror glass. • Circuitry.	• GO to Pinpoint Test M.

Ford Licensed Product

DIAGNOSIS AND TESTING (Continued)

Pinpoint Tests

DTC B1342: ECU DEFECTIVE

TEST CONDITIONS	TEST DETAILS/RESULTS/ACTIONS
B1342-1 CHECK FOR DTC	
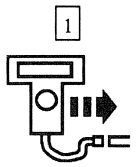 1 NGS 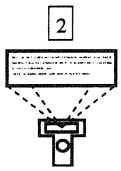 2 Clear DDM DTCs 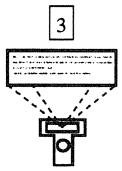 3 DDM Self Test	• Was DTC B1342 retrieved? → **Yes** REPLACE the driver door module. REPEAT the DDM self test. → **No** The system is operating properly. REPAIR any remaining DTCs or symptoms.

DTC B1529: MEMORY SET SWITCH CIRCUIT SHORT TO BATTERY

TEST CONDITIONS	TEST DETAILS/RESULTS/ACTIONS
B1529-1 CHECK PID MEM__OFF	
 1 2 DDM PID MEM__OFF	• Does the PID MEM__OFF read ACTIVE? → **Yes** GO to **B1529-2**. → **No** GO to **B1529-4**.

Official Licensed Ford Motor Company

(Continued)

DIAGNOSIS AND TESTING (Continued)

DTC B1529: MEMORY SET SWITCH CIRCUIT SHORT TO BATTERY (Continued)

TEST CONDITIONS	TEST DETAILS/RESULTS/ACTIONS
B1529-2 CHECK CIRCUIT 270 (BR/O) FOR A SHORT TO B+	
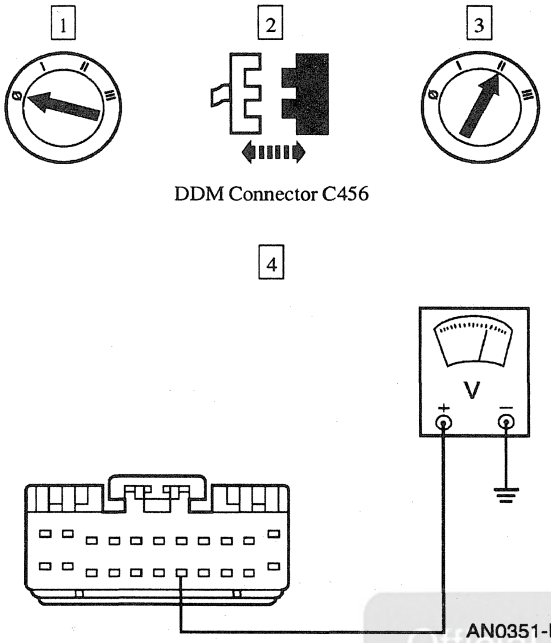	4 Measure voltage at the DDM connector Pin C456-18, Circuit 270 (BR/O). • Is the voltage reading B+? → **Yes** GO to **B1529-3**. → **No** REPLACE the driver door module. REPEAT the DDM self-test.
B1529-3 CHECK MEMORY OFF/RECALL SWITCH FOR A SHORT TO B+	
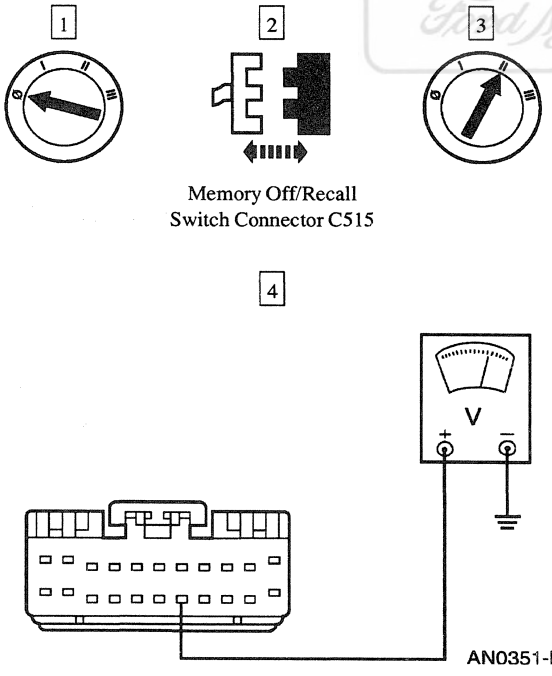	4 Measure the voltage at the DDM connector Pin C456-18, Circuit 270 (BR/O). • Is the voltage reading B+? → **Yes** REPAIR Circuit 270 (BR/O) for a short to B+. REPEAT the DDM self-test. → **No** REPLACE the memory off/recall switch. REPEAT the DDM self-test.

Official Licensed Product Ford Motor Company

(Continued)

DIAGNOSIS AND TESTING (Continued)

DTC B1529: MEMORY SET SWITCH CIRCUIT SHORT TO BATTERY (Continued)

TEST CONDITIONS	TEST DETAILS/RESULTS/ACTIONS
B1529-4 CHECK PID MEM1__SW	
1 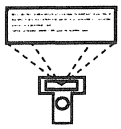 DDM PID MEM1__SW	• Does the PID MEM1__SW read ON? → **Yes** GO to **B1529-5**. → **No** GO to **B1529-7**.
B1529-5 CHECK CIRCUIT 267 (BR/LG) FOR A SHORT TO B+	
1 2 3 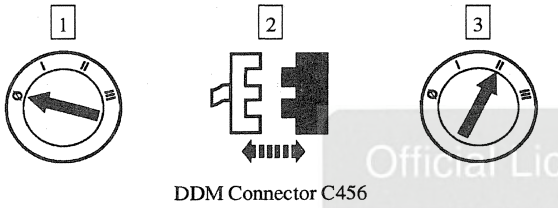 DDM Connector C456 4 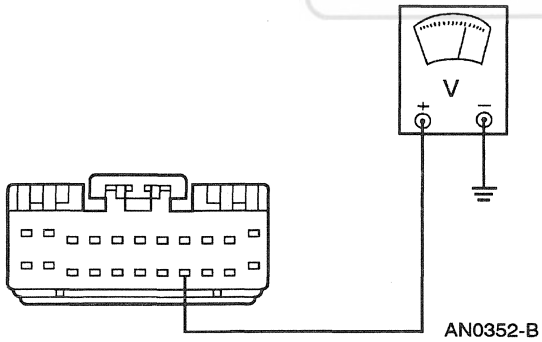 AN0352-B	4 Measure the voltage at the DDM connector Pin C456-19, Circuit 267 (BR/LG). • Is the voltage reading B+? → **Yes** GO to **B1529-6**. → **No** REPLACE the driver door module. REPEAT the DDM self-test.

Official Licensed Product
Ford Motor Co.

(Continued)

DIAGNOSIS AND TESTING (Continued)

DTC B1529: MEMORY SET SWITCH CIRCUIT SHORT TO BATTERY (Continued)

TEST CONDITIONS	TEST DETAILS/RESULTS/ACTIONS
B1529-6 ISOLATE THE SHORT TO B+	
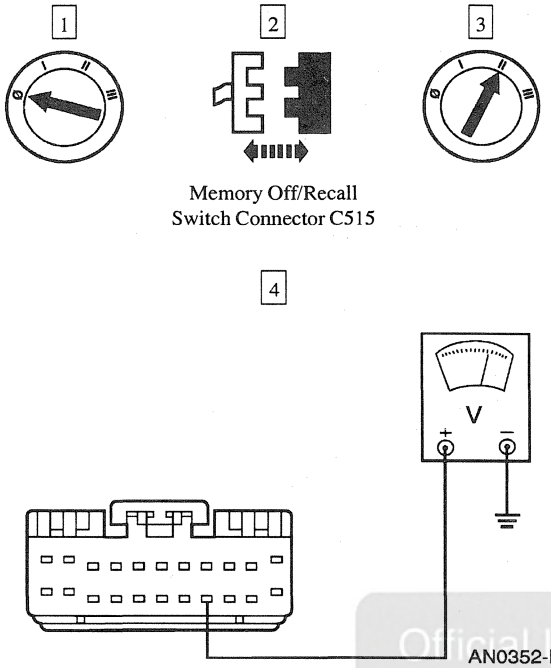	4 Measure the voltage at the DDM connector Pin C456-19, Circuit 267 (BR/LG). • Is the voltage reading B+? → **Yes** REPAIR Circuit 267 (BR/LG) for a short to B+. REPEAT the DDM self-test. → **No** REPLACE the memory off/recall switch. REPEAT the DDM self-test.
B1529-7 CHECK THE PID MEM2__SW	
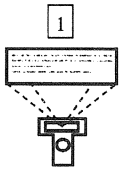	• Does the PID MEM2__SW read ON? → **Yes** GO to **B1529-8**. → **No** GO to **B1529-10**.

Official Licensed Product
Ford Motor Company

(Continued)

DIAGNOSIS AND TESTING (Continued)

DTC B1529: MEMORY SET SWITCH CIRCUIT SHORT TO BATTERY (Continued)

TEST CONDITIONS	TEST DETAILS/RESULTS/ACTIONS
B1529-8 CHECK CIRCUIT 268 (BK/O) FOR A SHORT TO B+	
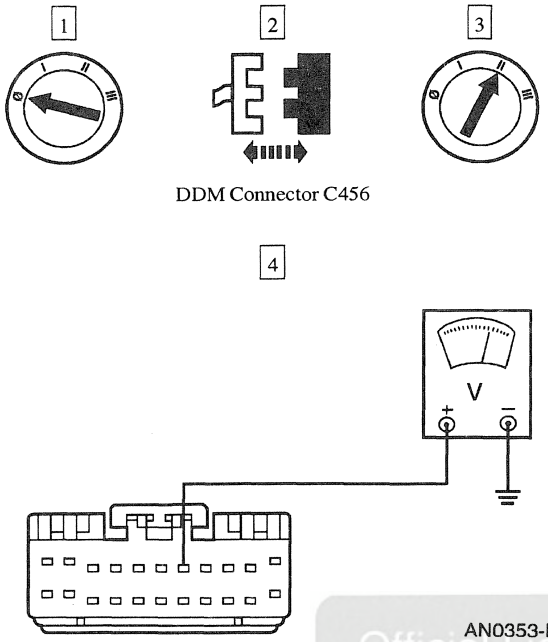	4 Measure the voltage at the DDM connector Pin C456-7, Circuit 268 (BK/O). • Is the voltage reading B+? → **Yes** GO to **B1529-9**. → **No** REPLACE the driver door module. REPEAT the DDM self-test.
B1529-9 CHECK THE MEMORY OFF/RECALL SWITCH	
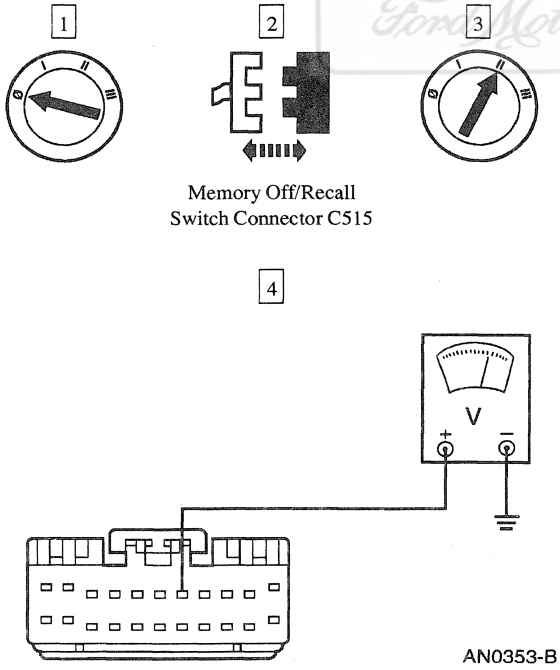	4 Measure the voltage at the DDM connector Pin C456-7, Circuit 268 (BK/O). • Is the voltage reading B+? → **Yes** REPAIR Circuit 268 (BK/O) for a short to B+. REPEAT the DDM self-test. → **No** REPLACE the memory off/recall switch. REPEAT the DDM self-test.

Official Licensed Product
Ford Motor Company

(Continued)

DIAGNOSIS AND TESTING (Continued)

DTC B1529: MEMORY SET SWITCH CIRCUIT SHORT TO BATTERY (Continued)

TEST CONDITIONS	TEST DETAILS/RESULTS/ACTIONS
B1529-10 CHECK FOR STICKING MEMORY OFF/RECALL SWITCH	
1 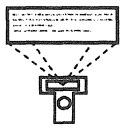 Select DDM PIDs MEM__OFF, MEM1__SW and MEM2__SW	2 Press each button on the memory off/recall switch while monitoring the PIDs. • Does each PID change state while corresponding button is pressed and then return to normal state within one second when the button is released? → **Yes** REPLACE the driver door module. REPEAT the DDM self-test. → **No** REPLACE the memory off/recall switch. REPEAT the DDM self-test.

Official Licensed Ford Motor Company

DTC B1539: MIRROR DRIVER SWITCH ASSEMBLY CIRCUIT FAILURE

TEST CONDITIONS	TEST DETAILS/RESULTS/ACTIONS
B1539-1 CHECK CIRCUIT 945 (Y/BK) FOR A SHORT TO B+	
1 2 3 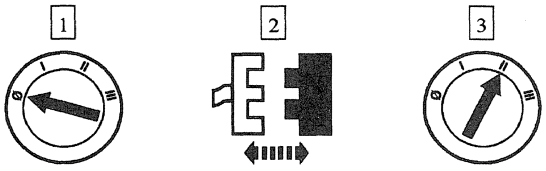 DDM Connector C456 4 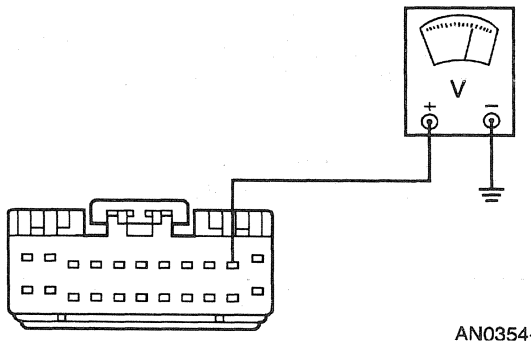 AN0354-B	4 Measure the voltage at the DDM connector Pin C456-10, Circuit 945 (Y/BK). • Is the voltage reading B+? → **Yes** GO to **B1539-2**. → **No** GO to **B1539-3**.

(Continued)

DIAGNOSIS AND TESTING (Continued)

DTC B1539: MIRROR DRIVER SWITCH ASSEMBLY CIRCUIT FAILURE (Continued)

TEST CONDITIONS	TEST DETAILS/RESULTS/ACTIONS
B1539-2 CHECK THE OUTSIDE REAR VIEW MIRROR CONTROL SWITCH FOR SHORT TO B+	
1 2 3 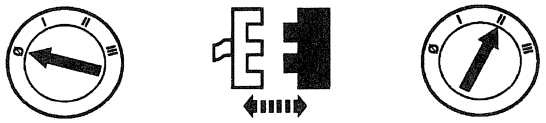 Outside Rear View Mirror Control Switch Connector C500 4 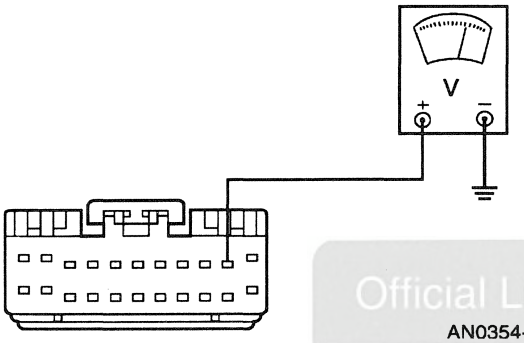 AN0354-B	4 Measure the voltage at the DDM connector Pin C456-10, Circuit 945 (Y/BK). • Is the voltage reading B+? → **Yes** REPAIR Circuit 945 (Y/BK) for a short to B+. REPEAT the DDM self-test. → **No** REPLACE the outside rear view mirror control. REPEAT the DDM self-test.
B1539-3 CHECK CIRCUIT 944 (DG/O) FOR A SHORT TO B+	
1 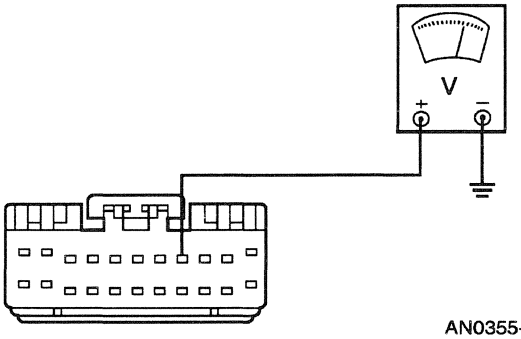 AN0355-B	1 Measure the voltage at the DDM connector Pin C456-8, Circuit 944 (DG/O). • Is the voltage reading B+? → **Yes** GO to **B1539-4**. → **No** GO to **B1539-5**.

Official Licensed Product

(Continued)

DIAGNOSIS AND TESTING (Continued)

DTC B1539: MIRROR DRIVER SWITCH ASSEMBLY CIRCUIT FAILURE (Continued)

TEST CONDITIONS	TEST DETAILS/RESULTS/ACTIONS
B1539-4 ISOLATE THE SHORT TO B+	
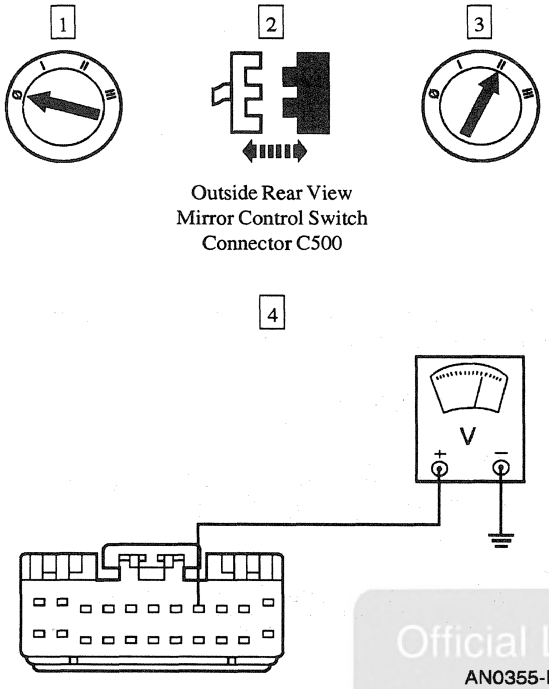	4 Measure the voltage at the DDM connector Pin C456-8, Circuit 944 (DG/O). • Is the voltage reading B+? → **Yes** REPAIR Circuit 944 (DG/O) for a short to B+. REPEAT the DDM self-test. → **No** REPLACE the outside rear view mirror control. REPEAT the DDM self-test.
B1539-5 CHECK CIRCUIT 942 (R/O) FOR A SHORT TO B+	
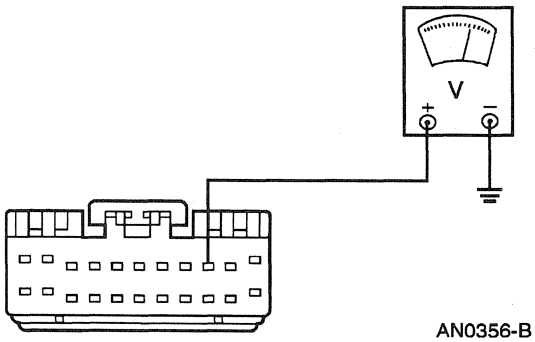	1 Measure the voltage at the DDM connector Pin C456-9, Circuit 942 (R/O). • Is the voltage reading B+? → **Yes** GO to **B1539-6**. → **No** GO to **B1539-7**.

Official Licensed Product

(Continued)

DIAGNOSIS AND TESTING (Continued)

DTC B1539: MIRROR DRIVER SWITCH ASSEMBLY CIRCUIT FAILURE (Continued)

TEST CONDITIONS	TEST DETAILS/RESULTS/ACTIONS
B1539-6 CHECK FOR A SHORTED OUTSIDE REAR VIEW MIRROR CONTROL SWITCH	
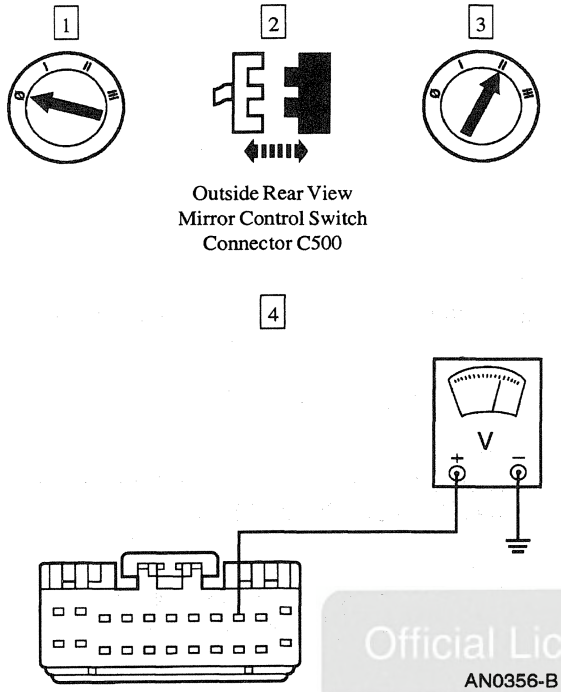	4 Measure the voltage at the DDM connector Pin C456-9, Circuit 942 (R/O). • Is the voltage reading B+? → **Yes** REPAIR Circuit 942 (R/O) for a short to B+. REPEAT the DDM self-test. → **No** REPLACE the outside rear view mirror control. REPEAT the DDM self-test.
B1539-7 CHECK CIRCUIT 940 (DB/O) FOR A SHORT TO B+	
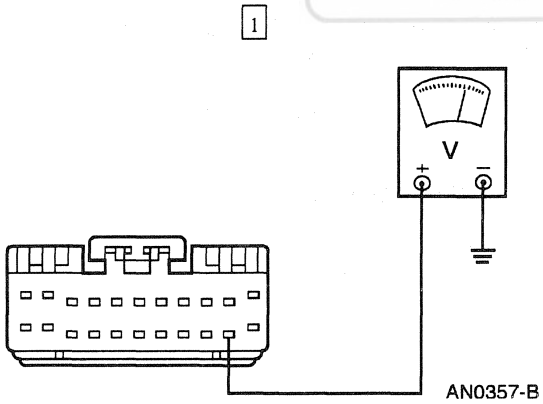	1 Measure the voltage at the DDM connector Pin C456-21, Circuit 940 (DB/O). • Is the voltage reading B+? → **Yes** GO to **B1539-8**. → **No** GO to **B1539-9**.

Official Licensed Product

(Continued)

DIAGNOSIS AND TESTING (Continued)

DTC B1539: MIRROR DRIVER SWITCH ASSEMBLY CIRCUIT FAILURE (Continued)

TEST CONDITIONS	TEST DETAILS/RESULTS/ACTIONS
B1539-8 ISOLATE THE CIRCUIT SHORT	
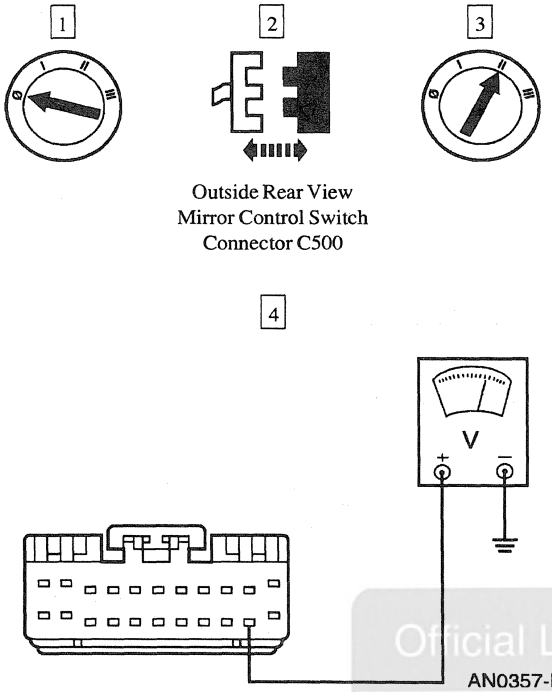	4 Measure the voltage at the DDM connector Pin C456-21, Circuit 940 (DB/O). • Is the voltage reading B+? → **Yes** REPAIR Circuit 940 (DB/O) for a short to B+. REPEAT the DDM self-test. → **No** REPLACE the outside rear view mirror control. REPEAT the DDM self-test.
B1539-9 CHECK CIRCUIT 943 (P/O) FOR A SHORT TO B+	
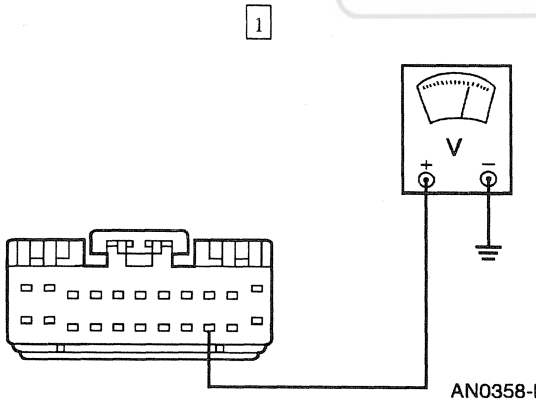	1 Measure the voltage at the DDM connector Pin C456-20, Circuit 943 (P/O). • Is the voltage reading B+? → **Yes** GO to **B1539-10**. → **No** GO to **B1539-11**.

(Continued)

Official Licensed Product

DIAGNOSIS AND TESTING (Continued)

DTC B1539: MIRROR DRIVER SWITCH ASSEMBLY CIRCUIT FAILURE (Continued)

TEST CONDITIONS	TEST DETAILS/RESULTS/ACTIONS
B1539-10 CHECK FOR AN INTERNALLY SHORTED OUTSIDE REAR VIEW MIRROR CONTROL SWITCH	
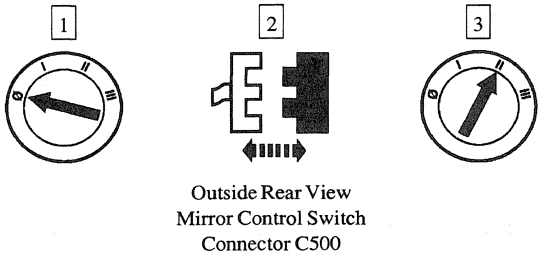 Outside Rear View Mirror Control Switch Connector C500 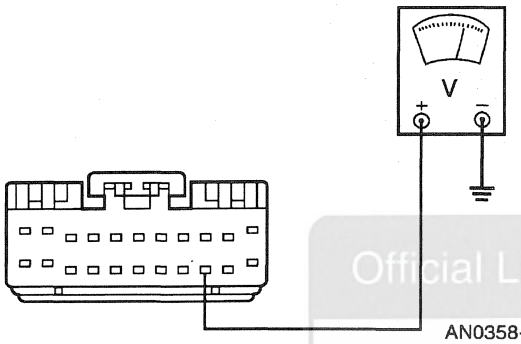	4 Measure the voltage at the DDM connector Pin C456-20, Circuit 943 (P/O). • Is the voltage reading B+? → **Yes** REPAIR Circuit 943 (P/O) for a short to B+. REPEAT the DDM self-test. → **No** REPLACE the outside rear view mirror control. REPEAT the DDM self-test.
B1539-11 CHECK FOR A STICKING OUTSIDE REAR VIEW MIRROR CONTROL SWITCH	
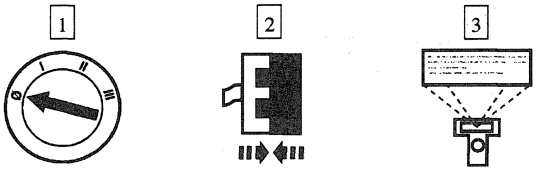 DDM C456 DDM Self-Test	• Is the DTC B1539 retrieved? → **Yes** REPLACE the driver door module. REPEAT the DDM self-test. → **No** CHECK the outside rear view mirror control for an intermittently sticking condition. REPEAT the DDM self-test.

Official Licensed Product

DIAGNOSIS AND TESTING (Continued)

DTC B2312: MIRROR PASSENGER HORIZONTAL FEEDBACK POTENTIOMETER CIRCUIT FAILURE

TEST CONDITIONS	TEST DETAILS/RESULTS/ACTIONS
B2312-1 CHECK FOR MULTIPLE DTCS	
1 2 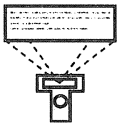 DSM Self-Test	• Are the DTCs B2316, B2320 and B2324 also retrieved? → **Yes** GO to Pinpoint Test B. → **No** GO to **B2312-2**.
B2312-2 CHECK FOR DTC B2316	
1 DSM Self-Test	• Was the DTC B2316 also retrieved? → **Yes** GO to **B2312-3**. → **No** GO to **B2312-5**.

Official Licensed Product
Ford Motor Company

(Continued)

DIAGNOSIS AND TESTING (Continued)

DTC B2312: MIRROR PASSENGER HORIZONTAL FEEDBACK POTENTIOMETER CIRCUIT FAILURE (Continued)

TEST CONDITIONS	TEST DETAILS/RESULTS/ACTIONS
B2312-3 CHECK FOR REFERENCE VOLTAGE SUPPLY	
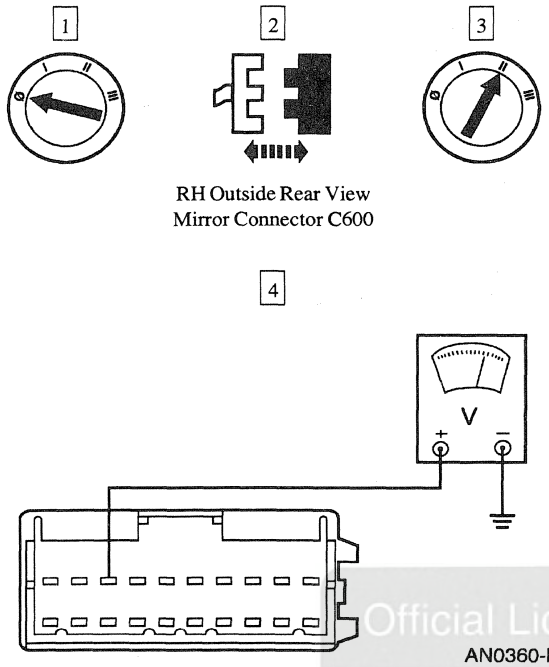	4 Measure the voltage at the RH outside rear view mirror connector Pin C600-3, Circuit 958 (GY/R). • Is the voltage reading approximately 5 volts? → **Yes** GO to **B2312-4**. → **No** REPAIR Circuit 958 (GY/R) for an open. REPEAT the DSM self-test.
B2312-4 CHECK CIRCUIT 955 (GY) FOR AN OPEN	
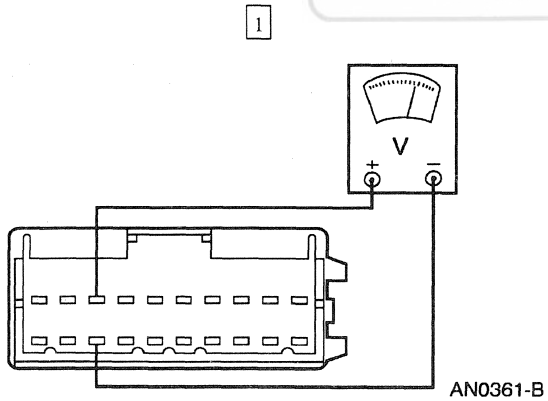	1 Measure the voltage between the RH outside rear view mirror connector Pin C600-3, Circuit 958 (GY/R) and Pin C600-13, Circuit 955 (GY). • Is the voltage reading approximately 5 volts? → **Yes** REPLACE the outside rear view mirror motor. REPEAT the DSM self-test. → **No** REPAIR Circuit 955 (GY) for an open. REPEAT the DSM self-test.

Official Licensed Product

(Continued)

DIAGNOSIS AND TESTING (Continued)

DTC B2312: MIRROR PASSENGER HORIZONTAL FEEDBACK POTENTIOMETER CIRCUIT FAILURE (Continued)

TEST CONDITIONS	TEST DETAILS/RESULTS/ACTIONS
B2312-5 CHECK THE RH OUTSIDE REAR VIEW MIRROR OPERATION	
	1 Operate the RH outside rear view mirror to the LEFT and RIGHT. • Does the RH outside rear view mirror move in either direction? → **Yes** GO to **B2312-6**. → **No** GO to **B2312-13**
B2312-6 CHECK CIRCUIT 954 (DG/W) FOR A SHORT TO B+	
1 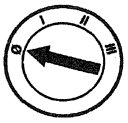 2 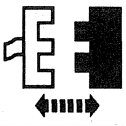 DSM Connector C311 3 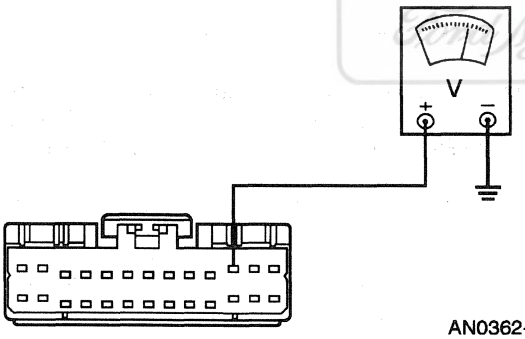 AN0362-B	3 Measure the voltage at the DSM connector Pin C311-11, Circuit 954 (DG/W). • Is the voltage reading B+? → **Yes** REPAIR Circuit 954 (DG/W) for a short to B+. REPEAT the DSM self-test. → **No** GO to **B2312-7**.

Official Licensed Product Ford Motor Company

(Continued)

DIAGNOSIS AND TESTING (Continued)

DTC B2312: MIRROR PASSENGER HORIZONTAL FEEDBACK POTENTIOMETER CIRCUIT FAILURE (Continued)

TEST CONDITIONS	TEST DETAILS/RESULTS/ACTIONS
B2312-7 CHECK THE RH OUTSIDE REAR VIEW MIRROR HORIZONTAL POTENTIOMETER	
1 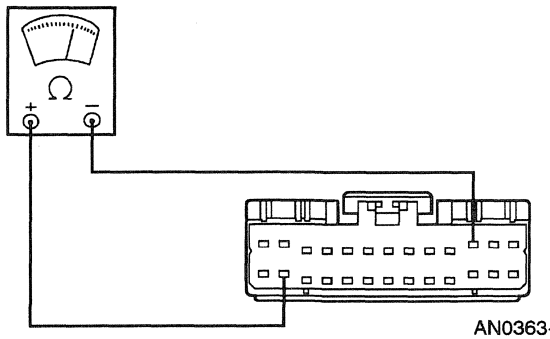 AN0363-B	1 Measure the resistance between the DSM connector Pin C311-11, Circuit 954 (DG/W) and Pin C311-15, Circuit 958 (GY/R). • Is the resistance 0.2 K-5.5 K ohms? → **Yes** GO to **B2312-11**. → **No** GO to **B2312-8**.
B2312-8 CHECK CIRCUIT 954 (DG/W) FOR A SHORT TO GROUND	
1 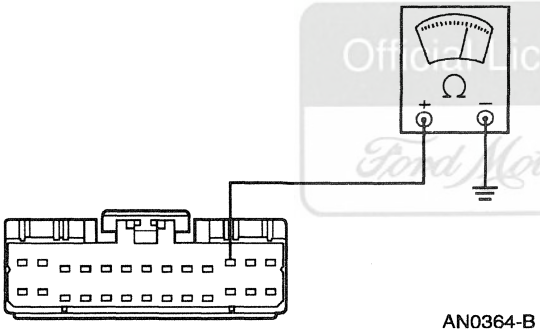 AN0364-B	1 Measure the resistance between the DSM connector Pin C311-11, Circuit 954 (DG/W) and ground. • Is the resistance 10 K ohms or less? → **Yes** GO to **B2312-9**. → **No** GO to **B2312-10**.

Official Licensed Product Ford Motor Company

(Continued)

DIAGNOSIS AND TESTING (Continued)

DTC B2312: MIRROR PASSENGER HORIZONTAL FEEDBACK POTENTIOMETER CIRCUIT FAILURE (Continued)

TEST CONDITIONS	TEST DETAILS/RESULTS/ACTIONS
B2312-9 CHECK THE RH OUTSIDE REAR VIEW MIRROR FOR SHORT	
1 RH Outside Rear View Mirror Connector C600 2 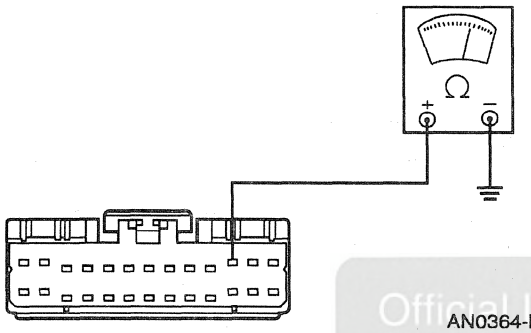 AN0364-B	2 Measure the resistance between the DSM connector Pin C311-11, Circuit 954 (DG/W) and ground. • Is the resistance 10 K ohms or less? → **Yes** REPAIR Circuit 954 (DG/W) for a short to ground. REPEAT the DSM self-test. → **No** REPLACE the RH outside rear view mirror motor. REPEAT the DSM self-test.
B2312-10 CHECK CIRCUIT 954 (DG/W) FOR AN OPEN	
1 RH Outside Rear View Mirror Connector C600 2 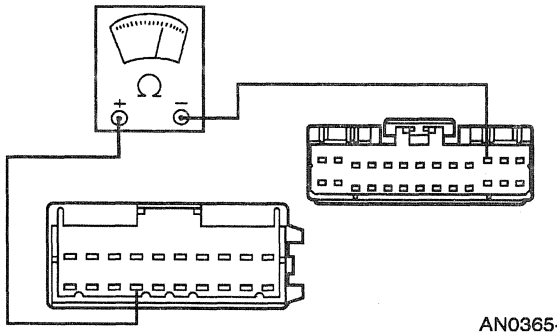 AN0365-B	2 Measure the resistance of Circuit 954 (DG/W) between the DSM connector Pin C311-11 and the RH outside rear view mirror connector Pin C600-14. • Is the resistance 5 ohms or less? → **Yes** REPLACE the RH outside rear view mirror motor. REPEAT the DSM self-test. → **No** REPAIR Circuit 954 (DG/W) for an open. REPEAT the DSM self-test.

(Continued)

Official Licensed Product Ford Motor Company

DIAGNOSIS AND TESTING (Continued)

DTC B2312: MIRROR PASSENGER HORIZONTAL FEEDBACK POTENTIOMETER CIRCUIT FAILURE (Continued)

TEST CONDITIONS	TEST DETAILS/RESULTS/ACTIONS
B2312-11 CHECK THE RH OUTSIDE REAR VIEW MIRROR HORIZONTAL POTENTIOMETER FOR AN OPEN	
1 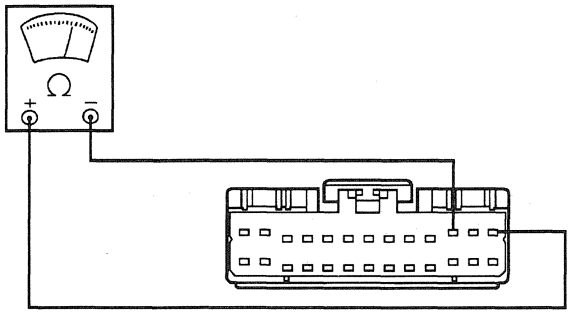 AN0366-B	1 Measure the resistance between the DSM connector Pin C311-11, Circuit 954 (DG/W) and Pin C311-13, Circuit 955 (GY). • Is the resistance 0.2 K - 5.5 K ohms? → **Yes** GO to **B2312-12**. → **No** REPLACE the RH outside rear view mirror motor. REPEAT the DDM self-test.
B2312-12 COMMAND THE MIRROR OPERATION	
1 DSM Connector C311 2 RH Outside Rear View Mirror Connector C600 3 4 DSM ACTIVE COMMAND - POWER MIRROR CONTROL 5 Select DSM PID PMIR__H	6 Trigger PR LEFT ON, then PR RIGHT ON, then PR LEFT ON, while monitoring the PID PMIR__H. • Does the PID PMIR__H change from NOTSEN to SENSED as directions are commanded ON? → **Yes** The system is functioning properly. → **No** REPLACE the driver seat module. REPEAT the DSM self-test.

Official Licensed Product Ford Motor Company

(Continued)

DIAGNOSIS AND TESTING (Continued)

DTC B2312: MIRROR PASSENGER HORIZONTAL FEEDBACK POTENTIOMETER CIRCUIT FAILURE (Continued)

TEST CONDITIONS	TEST DETAILS/RESULTS/ACTIONS
B2312-13 CHECK THE RH OUTSIDE REAR VIEW MIRROR MOTOR	
1 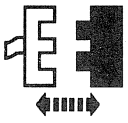 RH Outside Rear View Mirror Connector C600 2 DSM ACTIVE COMMAND - POWER MIRROR CONTROL 3 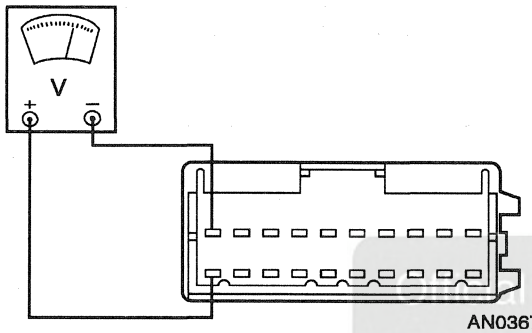 AN0367-B 4 Trigger PR LEFT ON	3 Measure the voltage between the RH outside rear view mirror connector Pin C600-11, Circuit 952 (W/LG) and Pin C600-1, Circuit 543 (DG). • Is the voltage reading B+? → **Yes** REPLACE the RH outside rear view mirror motor. REPEAT the DSM self-test. → **No** GO to **B2312-14**.

Ford Motor Company Licensed Product

(Continued)

DIAGNOSIS AND TESTING (Continued)

DTC B2312: MIRROR PASSENGER HORIZONTAL FEEDBACK POTENTIOMETER CIRCUIT FAILURE (Continued)

TEST CONDITIONS	TEST DETAILS/RESULTS/ACTIONS
B2312-14 ISOLATE THE SHORT TO GROUND	
1 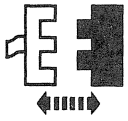 DSM Connector C311 2 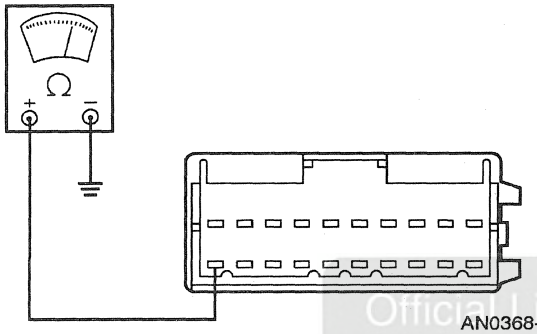 AN0368-B	2 Measure the resistance between the RH outside rear view mirror connector Pin C600-11, Circuit 952 (W/LG) and ground. • Is the resistance 10 K ohms or less? → **Yes** REPAIR Circuit 952 (W/LG) for a short to ground. REPEAT the DSM self-test. → **No** GO to **B2312-15.**
B2312-15 CHECK CIRCUIT 543 (DG) FOR A SHORT TO GROUND	
1 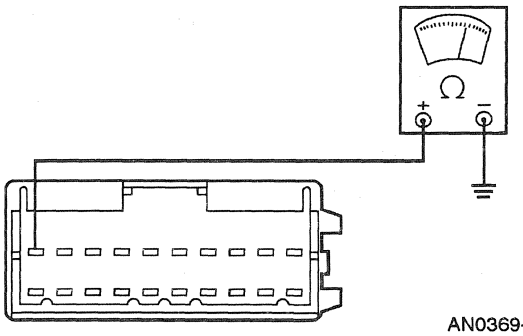 AN0369-B	1 Measure the resistance between the RH outside rear view mirror connector Pin C600-1, Circuit 543 (DG) and ground. • Is the resistance 10 K ohms or less? → **Yes** REPAIR Circuit 543 (DG) for a short to ground. REPEAT the DSM self-test. → **No** GO to **B2312-16.**

Official Licensed Product Ford Motor Company

(Continued)

DIAGNOSIS AND TESTING (Continued)

DTC B2312: MIRROR PASSENGER HORIZONTAL FEEDBACK POTENTIOMETER CIRCUIT FAILURE (Continued)

TEST CONDITIONS	TEST DETAILS/RESULTS/ACTIONS
B2312-16 CHECK CIRCUIT 952 (W/LG) FOR AN OPEN	
1 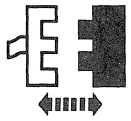 DSM Connector C311 2 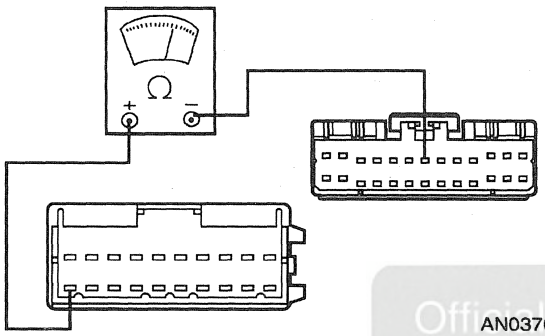 AN0370-B	2 Measure the resistance of Circuit 952 (W/LG) between the DSM connector Pin C311-7 and the RH outside rear view mirror connector Pin C600-11. • Is the resistance 5 ohms or less? → **Yes** GO to **B2312-17**. → **No** REPAIR Circuit 952 (W/LG) for an open. REPEAT the DSM self-test.
B2312-17 CHECK CIRCUIT 543 (DG) FOR AN OPEN	
1 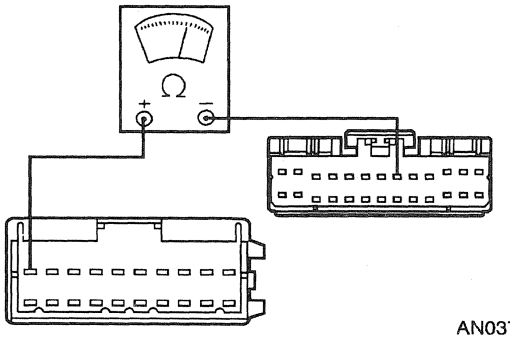 AN0371-B	1 Measure the resistance of Circuit 543 (DG) between the DSM connector Pin C311-8 and the RH outside rear view mirror connector Pin C600-1. • Is the resistance 5 ohms or less? → **Yes** REPLACE the driver seat module. REPEAT the DSM self-test. → **No** REPAIR Circuit 543 (DG) for an open. REPEAT the DSM self-test.

Official Licensed Product
Ford Motor Company

DIAGNOSIS AND TESTING (Continued)

DTC B2316: MIRROR PASSENGER VERTICAL FEEDBACK POTENTIOMETER CIRCUIT FAILURE

TEST CONDITIONS	TEST DETAILS/RESULTS/ACTIONS
B2316-1 CHECK FOR MULTIPLE DTCS	
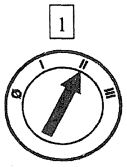 1 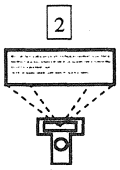 2 DSM Self-Test	• Are the DTCs B2312, B2320 and B2324 also retrieved? → **Yes** GO to Pinpoint Test B. → **No** GO to **B2316-2.**
B2316-2 CHECK FOR DTC B2312	
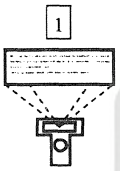 1 DSM Self-Test	• Was the DTC B2312 also retrieved? → **Yes** GO to **B2316-3.** → **No** GO to **B2316-5.**

Official Licensed Product
Ford Motor Company

(Continued)

DIAGNOSIS AND TESTING (Continued)

DTC B2316: MIRROR PASSENGER VERTICAL FEEDBACK POTENTIOMETER CIRCUIT FAILURE (Continued)

TEST CONDITIONS	TEST DETAILS/RESULTS/ACTIONS
B2316-3 CHECK FOR REFERENCE VOLTAGE SUPPLY	
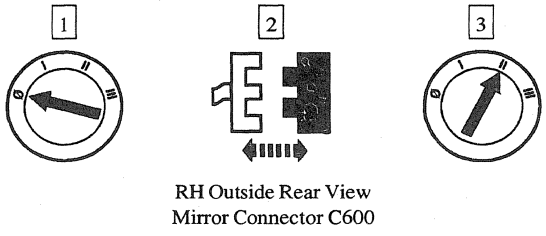 RH Outside Rear View Mirror Connector C600 4 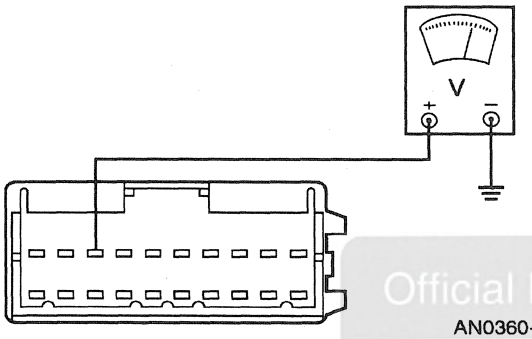 AN0360-B	4 Measure the voltage at the RH outside rear view mirror connector Pin C600-3, Circuit 958 (GY/R). • Is the voltage reading approximately 5 volts? → **Yes** GO to **B2316-4**. → **No** REPAIR Circuit 958 (GY/R) for an open. REPEAT the DSM self-test.
B2316-4 CHECK CIRCUIT 955 (GY) FOR AN OPEN	
1 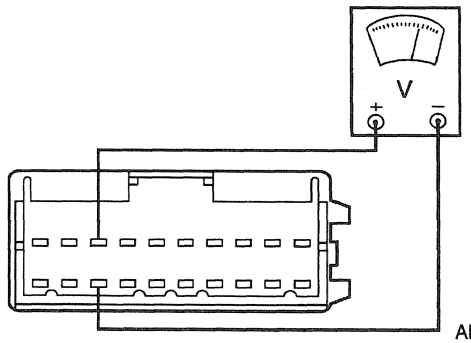 AN0361-B	1 Measure the voltage between the RH outside rear view mirror connector Pin C600-3, Circuit 958 (GY/R) and Pin C600-13, Circuit 955 (GY). • Is the voltage reading approximately 5 volts? → **Yes** REPLACE the RH outside rear view mirror motor. REPEAT the DSM self-test. → **No** REPAIR Circuit 955 (GY) for an open. REPEAT the DSM self-test.

Official Licensed Product

(Continued)

DIAGNOSIS AND TESTING (Continued)

DTC B2316: MIRROR PASSENGER VERTICAL FEEDBACK POTENTIOMETER CIRCUIT FAILURE (Continued)

TEST CONDITIONS	TEST DETAILS/RESULTS/ACTIONS
B2316-5 CHECK THE RH OUTSIDE REAR VIEW MIRROR OPERATION	
	1 Operate the RH outside rear view mirror to the UP, then DOWN position. • Does the RH outside rear view mirror move in either direction? → **Yes** GO to **B2316-6**. → **No** GO to **B2316-13**.
B2316-6 CHECK CIRCUIT 957 (P/W) FOR A SHORT TO B+	
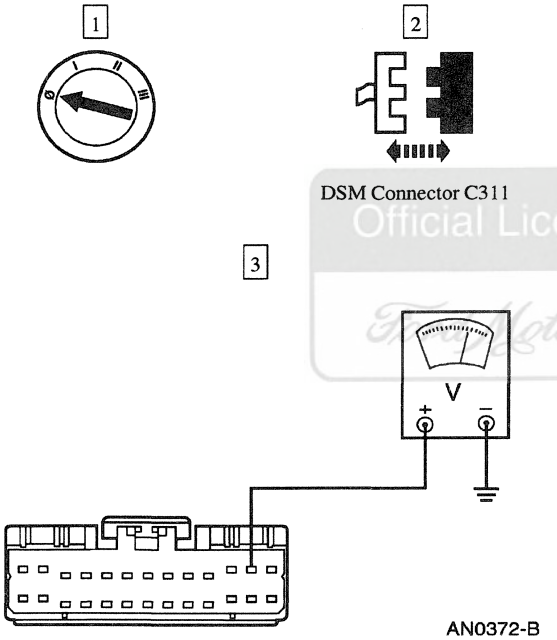	3 Measure the voltage at the DSM connector Pin C311-12, Circuit 957 (P/W). • Is the voltage reading B+? → **Yes** REPAIR Circuit 957 (P/W) for a short to B+. REPEAT the DSM self-test. → **No** GO to **B2316-7**.

Official Licensed Product Ford Motor Company

(Continued)

DIAGNOSIS AND TESTING (Continued)

DTC B2316: MIRROR PASSENGER VERTICAL FEEDBACK POTENTIOMETER CIRCUIT FAILURE (Continued)

TEST CONDITIONS	TEST DETAILS/RESULTS/ACTIONS
B2316-7 CHECK THE RH OUTSIDE REAR VIEW MIRROR VERTICAL POTENTIOMETER	
1 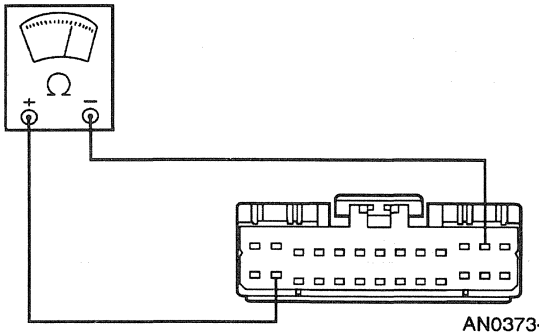 AN0373-B	1 Measure the resistance between the DSM connector Pin C311-12, Circuit 957 (P/W) and Pin C311-15, Circuit 958 (GY/R). • Is the resistance 0.2 K - 5.5 K ohms? → **Yes** GO to **B2316-11**. → **No** GO to **B2316-8**.
B2316-8 CHECK CIRCUIT 957 (P/W) FOR A SHORT TO GROUND	
1 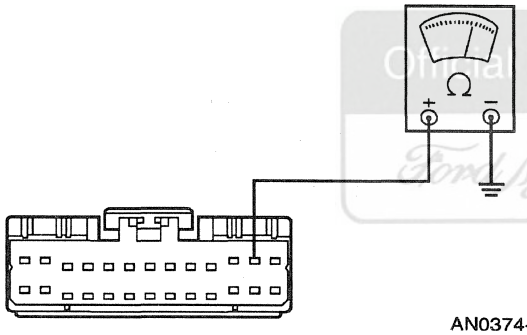 AN0374-B	1 Measure the resistance between the DSM connector Pin C311-12, Circuit 957 (P/W) and ground. • Is the resistance 10 K ohms or less? → **Yes** GO to **B2316-9**. → **No** GO to **B2316-10**.

Official Licensed Product Ford Motor Company

(Continued)

DIAGNOSIS AND TESTING (Continued)

DTC B2316: MIRROR PASSENGER VERTICAL FEEDBACK POTENTIOMETER CIRCUIT FAILURE (Continued)

TEST CONDITIONS	TEST DETAILS/RESULTS/ACTIONS
B2316-9 CHECK THE RH OUTSIDE REAR VIEW MIRROR FOR SHORT	
1 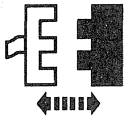 RH Outside Rear View Mirror Connector C600 2 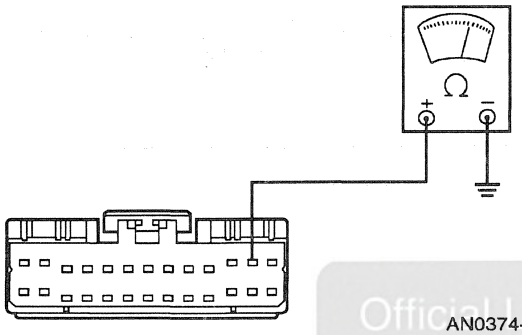 AN0374-B	2 Measure the resistance between the DSM connector Pin C311-12, Circuit 957 (P/W) and ground. • Is the resistance 10 K ohms or less? → **Yes** REPAIR Circuit 957 (P/W) for a short to ground. REPEAT the DSM self-test. → **No** REPLACE the RH outside rear view mirror motor. REPEAT the DSM self-test.
B2316-10 CHECK CIRCUIT 957 (P/W) FOR AN OPEN	
1 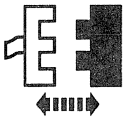 RH Outside Rear View Mirror Connector C600 2 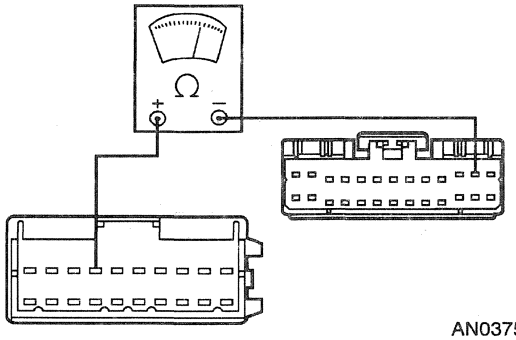 AN0375-B	2 Measure the resistance of Circuit 957 (P/W) between the DSM connector Pin C311-12 and the RH outside rear view mirror connector Pin C600-4. • Is the resistance 5 ohms or less? → **Yes** REPLACE the RH outside rear view mirror motor. REPEAT the DSM self-test. → **No** REPAIR Circuit 957 (P/W) for an open. REPEAT the DSM self-test.

Official Licensed Product Ford Motor Company

(Continued)

DIAGNOSIS AND TESTING (Continued)

DTC B2316: MIRROR PASSENGER VERTICAL FEEDBACK POTENTIOMETER CIRCUIT FAILURE (Continued)

TEST CONDITIONS	TEST DETAILS/RESULTS/ACTIONS
B2316-11 CHECK THE RH OUTSIDE REAR VIEW MIRROR VERTICAL POTENTIOMETER FOR AN OPEN	
1 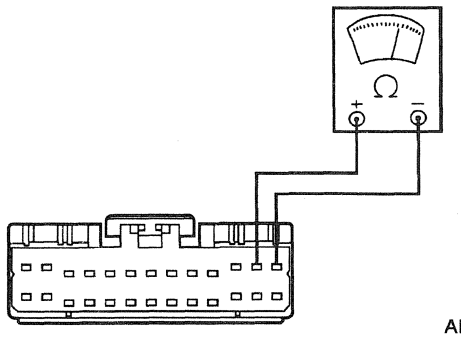 AN0376-B	1 Measure the resistance between the DSM connector Pin C311-12, Circuit 957 (P/W) and Pin C311-13, Circuit 955 (GY). • Is the resistance 0.2 K - 5.5 K ohms? → **Yes** GO to **B2316-12**. → **No** REPLACE the RH outside rear view mirror motor. REPEAT the DSM self-test.
B2316-12 COMMAND THE MIRROR OPERATION	
1 DSM Connector C311 2 RH Outside Rear View Mirror Connector C600 3 4 DSM ACTIVE COMMAND - POWER MIRROR CONTROL 5 Select DSM PID PMIR__V	6 Trigger PR UP ON for 5 seconds, then PR DOWN ON for 5 seconds, then PR UP ON for 5 seconds, while monitoring the PID PMIR__V. • Does the PID PMIR__V change from NOTSEN to SENSED as the directions are commanded ON? → **Yes** The system is functioning properly. → **No** REPLACE the driver seat module. REPEAT the DSM self-test.

Official Licensed Product Ford Motor Company

(Continued)

DIAGNOSIS AND TESTING (Continued)

DTC B2316: MIRROR PASSENGER VERTICAL FEEDBACK POTENTIOMETER CIRCUIT FAILURE (Continued)

TEST CONDITIONS	TEST DETAILS/RESULTS/ACTIONS
B2316-13 CHECK THE RH OUTSIDE REAR VIEW MIRROR MOTOR	
1 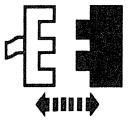 RH Outside Rear View Mirror Connector C600 2 DSM ACTIVE COMMAND - POWER MIRROR CONTROL 3 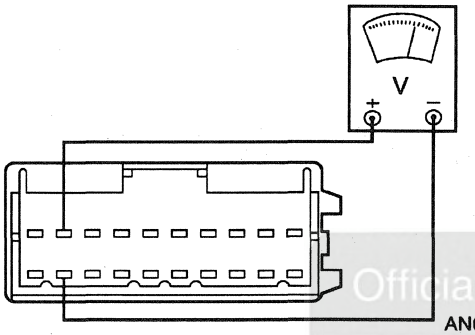 AN0377-B 4 Trigger PR UP ON	3 Measure the voltage between the RH outside rear view mirror connector Pin C600-2, Circuit 544 (P) and Pin C600-12, Circuit 953 (W/P). • Is the voltage reading B+? → **Yes** REPLACE the RH outside rear view mirror motor. REPEAT the DSM self-test. → **No** GO to **B2316-14**.

Official Licensed Product
Ford Motor Company

(Continued)

DIAGNOSIS AND TESTING (Continued)

DTC B2316: MIRROR PASSENGER VERTICAL FEEDBACK POTENTIOMETER CIRCUIT FAILURE (Continued)

TEST CONDITIONS	TEST DETAILS/RESULTS/ACTIONS
B2316-14 ISOLATE THE SHORT TO GROUND	
1 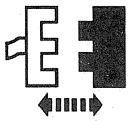 DSM Connector C311 2 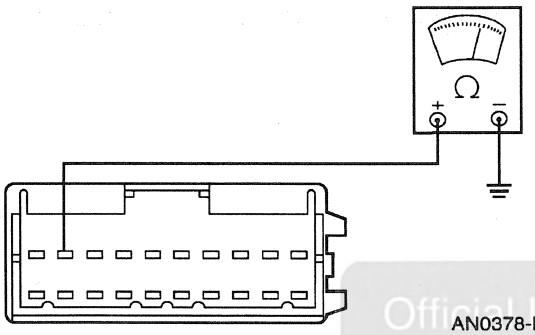 AN0378-B	2 Measure the resistance between the RH outside rear view mirror connector Pin C600-2, Circuit 544 (P) and ground. • Is the resistance 10 K ohms or less? → **Yes** REPAIR Circuit 544 (P) for a short to ground. REPEAT the DSM self-test. → **No** GO to **B2316-15**.
B2316-15 CHECK CIRCUIT 953 (W/P) FOR A SHORT TO GROUND	
1 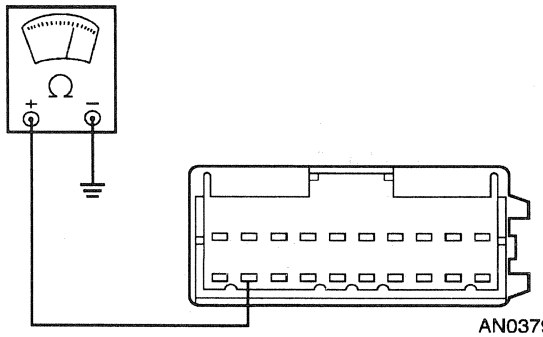 AN0379-B	1 Measure the resistance between the RH outside rear view mirror connector Pin C600-12, Circuit 953 (W/P) and ground. • Is the resistance 10 K ohms or less? → **Yes** REPAIR Circuit 953 (W/P) for a short to ground. REPEAT the DSM self-test. → **No** GO to **B2316-16**.

Official Licensed Product
Ford Motor Company

(Continued)

DIAGNOSIS AND TESTING (Continued)

DTC B2316: MIRROR PASSENGER VERTICAL FEEDBACK POTENTIOMETER CIRCUIT FAILURE (Continued)

TEST CONDITIONS	TEST DETAILS/RESULTS/ACTIONS
B2316-16 CHECK CIRCUIT 544 (P) FOR AN OPEN	
1 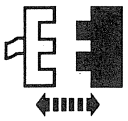 DSM Connector C311 2 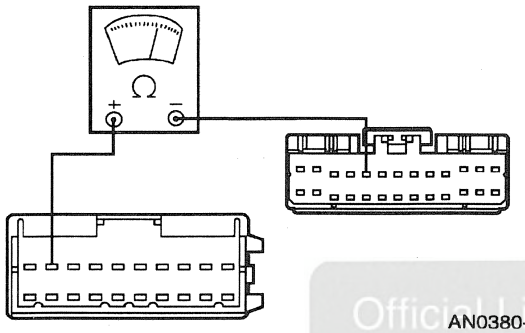 AN0380-B	2 Measure the resistance of Circuit 544 (P) between the DSM connector Pin C311-5 and the RH outside rear view mirror connector Pin C600-2. • Is the resistance 5 ohms or less? → **Yes** GO to **B2316-17**. → **No** REPAIR Circuit 544 (P) for an open. REPEAT the DSM self-test.
B2316-17 CHECK CIRCUIT 953 (W/P) FOR AN OPEN	
1 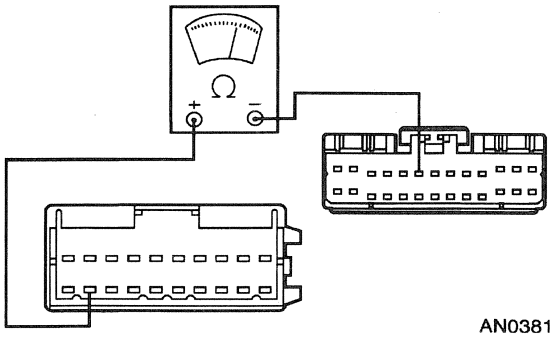 AN0381-B	1 Measure the resistance of Circuit 953 (W/P) between the DSM connector Pin C311-6 and the RH outside rear view mirror connector Pin C600-12. • Is the resistance 5 ohms or less? → **Yes** REPLACE the driver seat module. REPEAT the DSM self-test. → **No** REPAIR Circuit 953 (W/P) for an open. REPEAT the DSM self-test.

Official Licensed Product
Ford Motor Company

DIAGNOSIS AND TESTING (Continued)

DTC B2320: MIRROR DRIVER HORIZONTAL FEEDBACK POTENTIOMETER CIRCUIT FAILURE

TEST CONDITIONS	TEST DETAILS/RESULTS/ACTIONS
B2320-1 CHECK FOR MULTIPLE DTCS	
 1 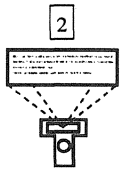 2 DSM Self-Test	• Are the DTCs B2312, B2316 and B2324 also retrieved? → **Yes** GO to Pinpoint Test B. → **No** GO to **B2320-2**.
B2320-2 CHECK FOR DTC B2324	
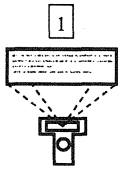 1 DSM Self-Test	• Was the DTC B2324 also retrieved? → **Yes** GO to **B2320-3**. → **No** GO to **B2320-5**.

Official Licensed Product
Ford Motor Company

(Continued)

DIAGNOSIS AND TESTING (Continued)

DTC B2320: MIRROR DRIVER HORIZONTAL FEEDBACK POTENTIOMETER CIRCUIT FAILURE (Continued)

TEST CONDITIONS	TEST DETAILS/RESULTS/ACTIONS
B2320-3 CHECK FOR REFERENCE VOLTAGE SUPPLY	
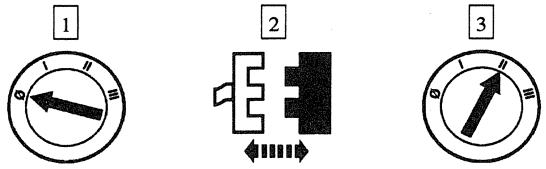 LH Outside Rear View Mirror Connector C509 4 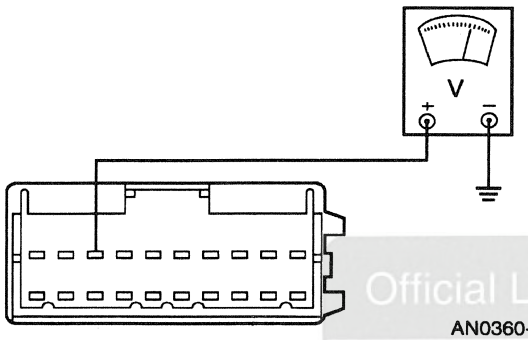 AN0360-B	4 Measure the voltage at the LH outside rear view mirror connector Pin C509-3, Circuit 958 (GY/R). • Is the voltage reading approximately 5 volts? → **Yes** GO to **B2320-4**. → **No** REPAIR Circuit 958 (GY/R) for an open. REPEAT the DSM self-test.
B2320-4 CHECK CIRCUIT 955 (GY) FOR AN OPEN	
1 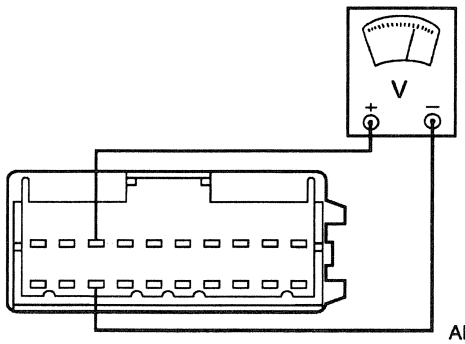 AN0361-B	1 Measure the voltage between the LH outside rear view mirror connector Pin C509-3, Circuit 958 (GY/R) and Pin C509-13, Circuit 955 (GY). • Is the voltage reading approximately 5 volts? → **Yes** REPLACE the RH outside rear view mirror motor. REPEAT the DSM self-test. → **No** REPAIR Circuit 955 (GY) for an open. REPEAT the DSM self-test.

Official Licensed Product

(Continued)

DIAGNOSIS AND TESTING (Continued)

DTC B2320: MIRROR DRIVER HORIZONTAL FEEDBACK POTENTIOMETER CIRCUIT FAILURE (Continued)

TEST CONDITIONS	TEST DETAILS/RESULTS/ACTIONS
B2320-5 CHECK THE LH OUTSIDE REAR VIEW MIRROR OPERATION	
	1 Operate the LH outside rear view mirror to the LEFT then RIGHT. • Does the LH outside rear view mirror move in either direction? → **Yes** GO to **B2320-6**. → **No** GO to **B2320-13**.
B2320-6 CHECK CIRCUIT 949 (R/W) FOR A SHORT TO B+	
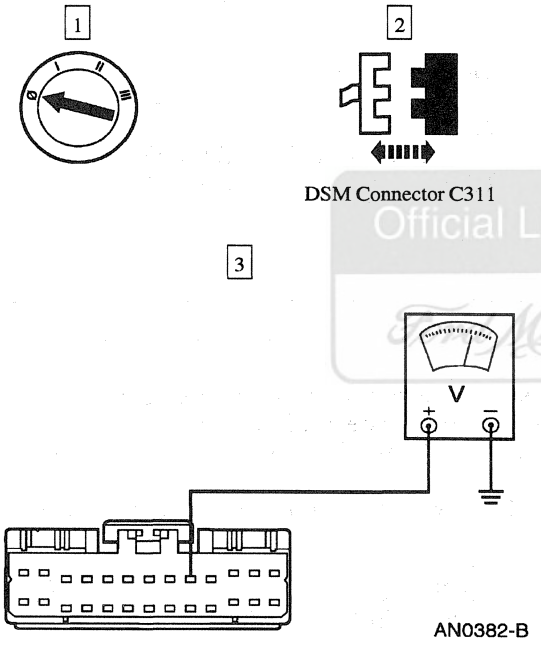	3 Measure the voltage at the DSM connector Pin C311-9, Circuit 949 (R/W). • Is the voltage reading B+? → **Yes** REPAIR Circuit 949 (R/W) for a short to B+. REPEAT the DSM self-test. → **No** GO to **B2320-7**.

Official Licensed Product Ford Motor Company

(Continued)

DIAGNOSIS AND TESTING (Continued)

DTC B2320: MIRROR DRIVER HORIZONTAL FEEDBACK POTENTIOMETER CIRCUIT FAILURE (Continued)

TEST CONDITIONS	TEST DETAILS/RESULTS/ACTIONS
B2320-7 CHECK THE LH OUTSIDE REAR VIEW MIRROR HORIZONTAL POTENTIOMETER	
1 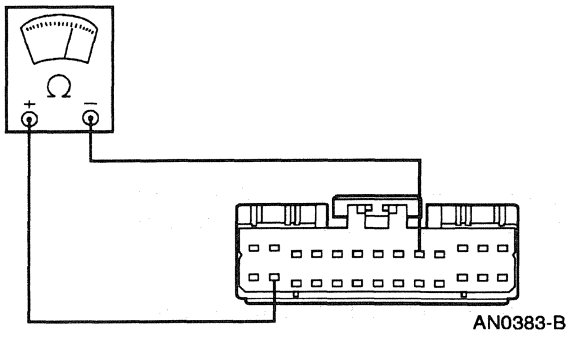 AN0383-B	1 Measure the resistance between the DSM connector Pin C311-9, Circuit 949 (R/W) and Pin C311-15, Circuit 958 (GY/R). • Is the resistance 0.2 K - 5.5 K ohms? → **Yes** GO to **B2320-11**. → **No** GO to **B2320-8**.
B2320-8 CHECK CIRCUIT 949 (R/W) FOR A SHORT TO GROUND	
1 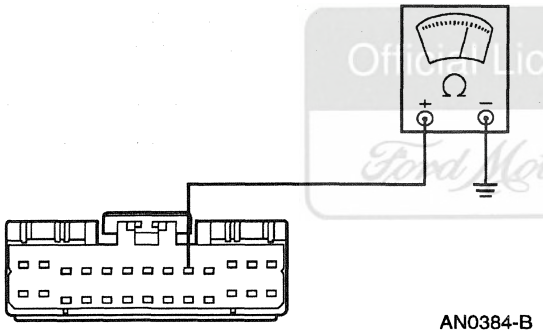 AN0384-B	1 Measure the resistance between the DSM connector Pin C311-9, Circuit 949 (R/W) and ground. • Is the resistance 10 K ohms or less? → **Yes** GO to **B2320-9**. → **No** GO to **B2320-10**.

Official Licensed Product Ford Motor Company

(Continued)

DIAGNOSIS AND TESTING (Continued)

DTC B2320: MIRROR DRIVER HORIZONTAL FEEDBACK POTENTIOMETER CIRCUIT FAILURE (Continued)

TEST CONDITIONS	TEST DETAILS/RESULTS/ACTIONS
B2320-9 CHECK THE LH OUTSIDE REAR VIEW MIRROR FOR A SHORT	
1 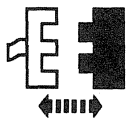 LH Outside Rear View Mirror Connector C509 2 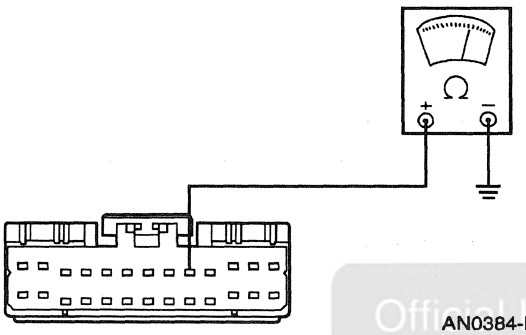 AN0384-B	2 Measure the resistance between the DSM connector Pin C311-9, Circuit 949 (R/W) and ground. • Is the resistance 10 K ohms or less? → **Yes** REPAIR Circuit 949 (R/W) for a short to ground. REPEAT the DSM self-test. → **No** REPLACE the RH outside rear view mirror motor. REPEAT the DSM self-test.
B2320-10 CHECK CIRCUIT 949 (R/W) FOR AN OPEN	
1 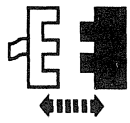 LH Outside Rear View Mirror Connector C509 2 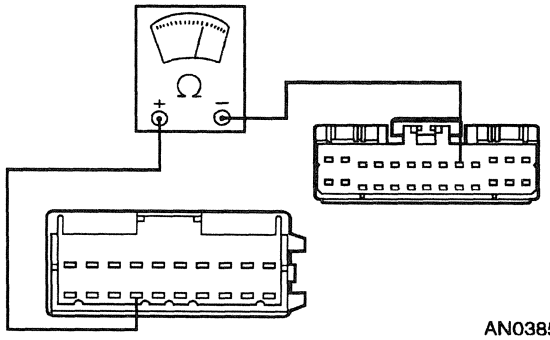 AN0385-B	2 Measure the resistance of Circuit 949 (R/W) between the DSM connector Pin C311-9 and the LH outside rear view mirror connector Pin C509-14. • Is the resistance 5 ohms or less? → **Yes** REPLACE the LH outside rear view mirror motor. REPEAT the DSM self-test. → **No** REPAIR Circuit 949 (R/W) for an open. REPEAT the DSM self-test.

Official Licensed Product Ford Motor Company

(Continued)

DIAGNOSIS AND TESTING (Continued)

DTC B2320: MIRROR DRIVER HORIZONTAL FEEDBACK POTENTIOMETER CIRCUIT FAILURE (Continued)

TEST CONDITIONS	TEST DETAILS/RESULTS/ACTIONS
B2320-11 CHECK THE LH OUTSIDE REAR VIEW MIRROR HORIZONTAL POTENTIOMETER FOR AN OPEN	
1 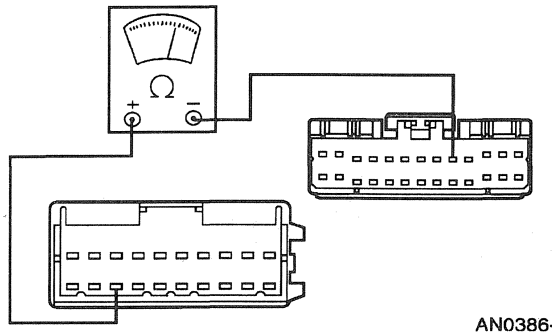 AN0386-B	1 Measure the resistance of Circuit 955 (GY) between the DSM connector Pin C311-9, Circuit 949 (R/W) and Pin C311-13. • Is the resistance 0.2 K - 5.5 K ohms? → **Yes** GO to **B2320-12**. → **No** REPLACE the LH outside rear view mirror motor. REPEAT the DSM self-test.
B2320-12 COMMAND THE MIRROR OPERATION	
1 DSM Connector C311 2 LH Outside Rear View Mirror Connector C509 3 4 DSM ACTIVE COMMAND - POWER MIRROR CONTROL 5 Select DSM PID DMIR__H	6 Trigger DR LEFT ON for 5 seconds, then DR RIGHT ON for 5 seconds, then DR LEFT ON for 5 seconds, while monitoring the PID DMIR__H. • Does the PID DMIR__H change from NOTSEN to SENSED as the directions are commanded ON? → **Yes** The system is functioning properly. → **No** REPLACE the driver seat module. REPEAT the DSM self-test.

Official Licensed Product Ford Motor Company

(Continued)

DIAGNOSIS AND TESTING (Continued)

DTC B2320: MIRROR DRIVER HORIZONTAL FEEDBACK POTENTIOMETER CIRCUIT FAILURE (Continued)

TEST CONDITIONS	TEST DETAILS/RESULTS/ACTIONS
B2320-13 CHECK THE LH OUTSIDE REAR VIEW MIRROR MOTOR	
1 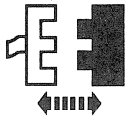 LH Outside Rear View Mirror Connector C509 2 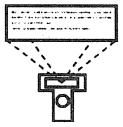 DSM ACTIVE COMMAND - POWER MIRROR CONTROL 3 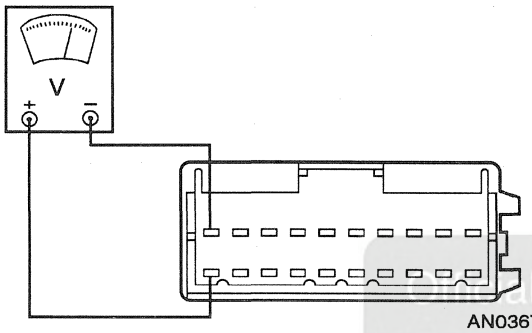 AN0367-B 4 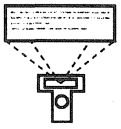 Trigger DR LEFT ON	3 Measure the voltage between the LH outside rear view mirror connector Pin C509-11, Circuit 947 (Y/R) and Pin C509-1, Circuit 540 (R). • Is the voltage reading B+? → **Yes** REPLACE the LH outside rear view mirror motor. REPEAT the DSM self-test. → **No** GO to **B2320-14**.

Ford Motor Company Licensed Product

(Continued)

DIAGNOSIS AND TESTING (Continued)

DTC B2320: MIRROR DRIVER HORIZONTAL FEEDBACK POTENTIOMETER CIRCUIT FAILURE (Continued)

TEST CONDITIONS	TEST DETAILS/RESULTS/ACTIONS
B2320-14 ISOLATE THE SHORT TO GROUND	
1 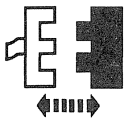 DSM Connector C311 2 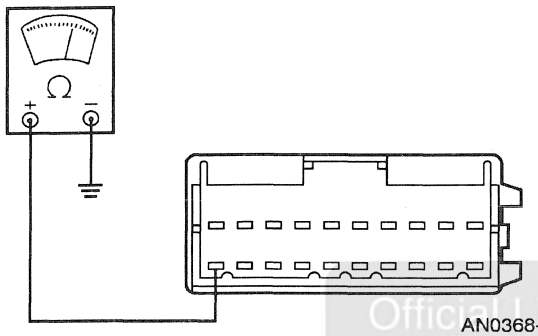 AN0368-B	2 Measure the resistance between the LH outside rear view mirror connector Pin C509-11, Circuit 947 (Y/R) and ground. • Is the resistance 10 K ohms or less? → **Yes** REPAIR Circuit 947 (Y/R) for a short to ground. REPEAT the DSM self-test. → **No** GO to **B2320-15**.
B2320-15 CHECK CIRCUIT 540 (R) FOR A SHORT TO GROUND	
1 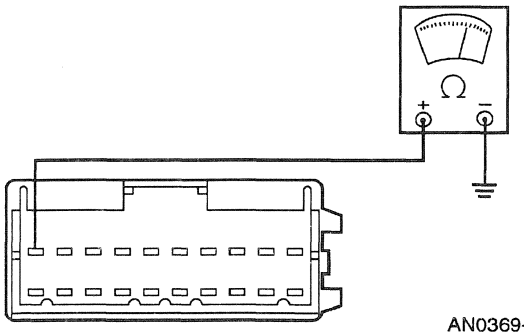 AN0369-B	1 Measure the resistance between the LH outside rear view mirror connector Pin C509-1, Circuit 540 (R) and ground. • Is the resistance 10 K ohms or less? → **Yes** REPAIR Circuit 540 (R) for a short to ground. REPEAT the DSM self-test. → **No** GO to **B2320-16**.

Official Licensed Product
Ford Motor Company

(Continued)

DIAGNOSIS AND TESTING (Continued)

DTC B2320: MIRROR DRIVER HORIZONTAL FEEDBACK POTENTIOMETER CIRCUIT FAILURE (Continued)

TEST CONDITIONS	TEST DETAILS/RESULTS/ACTIONS
B2320-16 CHECK CIRCUIT 947 (Y/R) FOR AN OPEN	
1 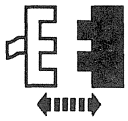 DSM Connector C311 2 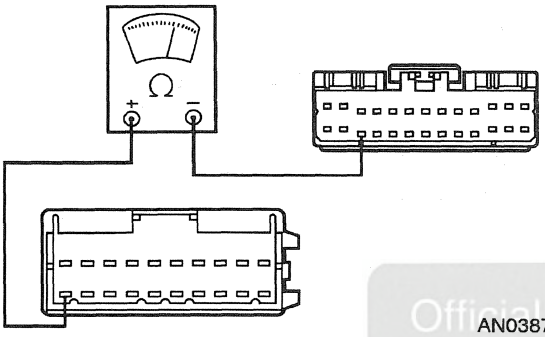 AN0387-B	2 Measure the resistance of Circuit 947 (Y/R) between the DSM connector Pin C311-16 and the LH outside rear view mirror connector Pin C509-11. • Is the resistance 5 ohms or less? → **Yes** GO to **B2320-17**. → **No** REPAIR Circuit 947 (Y/R) for an open. REPEAT the DSM self-test.
B2320-17 CHECK CIRCUIT 540 (R) FOR AN OPEN	
1 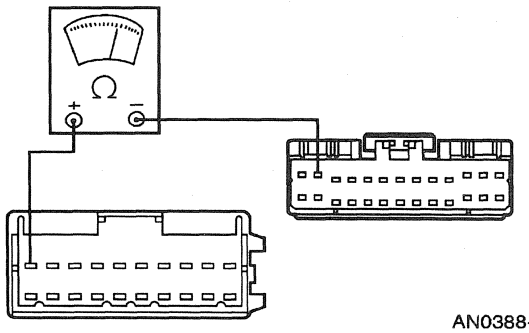 AN0388-B	1 Measure the resistance of Circuit 540 (R) between the DSM connector Pin C311-2 and the LH outside rear view mirror connector Pin C509-1. • Is the resistance 5 ohms or less? → **Yes** REPLACE the driver seat module. REPEAT the DSM self-test. → **No** REPAIR Circuit 540 (R) for an open. REPEAT the DSM self-test.

Official Licensed Product
Ford Motor Company

DIAGNOSIS AND TESTING (Continued)

DTC B2324: MIRROR DRIVER VERTICAL FEEDBACK POTENTIOMETER CIRCUIT FAILURE

TEST CONDITIONS	TEST DETAILS/RESULTS/ACTIONS
B2324-1 CHECK FOR MULTIPLE DTCS	
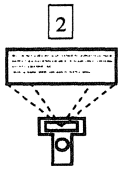 DSM Self-Test	• Are the DTCs B2312, B2316 and B2320 also retrieved? → **Yes** GO to Pinpoint Test B. → **No** GO to **B2324-2**.
B2324-2 CHECK FOR THE DTC B2320	
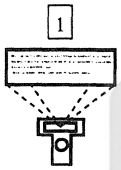 DSM Self-Test	• Was the DTC B2320 also retrieved? → **Yes** GO to **B2324-3**. → **No** GO to **B2324-5**.

Official Licensed Product Ford Motor Company

(Continued)

DIAGNOSIS AND TESTING (Continued)

DTC B2324: MIRROR DRIVER VERTICAL FEEDBACK POTENTIOMETER CIRCUIT FAILURE (Continued)

TEST CONDITIONS	TEST DETAILS/RESULTS/ACTIONS
B2324-3 CHECK FOR REFERENCE VOLTAGE SUPPLY	
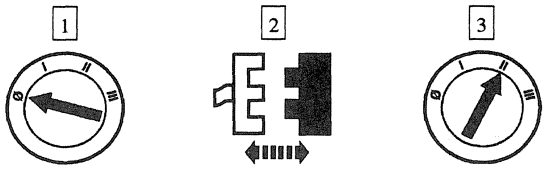 LH Outside Rear View Mirror Connector C509 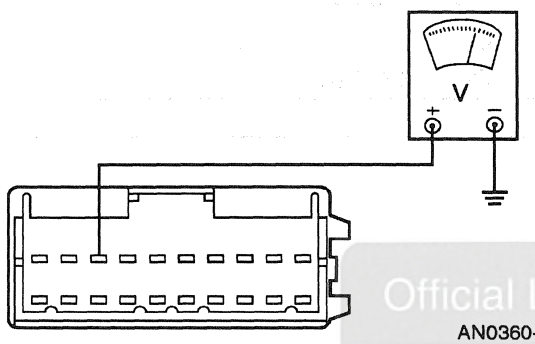 AN0360-B	4 Measure the voltage at the LH outside rear view mirror connector Pin C509-3, Circuit 958 (GY/R). • Is the voltage reading approximately 5 volts? → **Yes** GO to **B2324-4**. → **No** REPAIR Circuit 958 (GY/R) for an open. REPEAT the DSM self-test.
B2324-4 CHECK CIRCUIT 955 (GY) FOR AN OPEN	
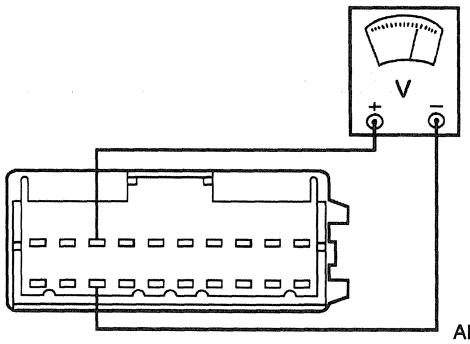 AN0361-B	1 Measure the voltage between the LH outside rear view mirror connector Pin C509-3, Circuit 958 (GY/R) and Pin C509-13, Circuit 955 (GY). • Is the voltage reading approximately 5 volts? → **Yes** REPLACE the LH outside rear view mirror motor. REPEAT the DSM self-test. → **No** REPAIR Circuit 955 (GY) for an open. REPEAT the DSM self-test.

Official Licensed Product

(Continued)

DIAGNOSIS AND TESTING (Continued)

DTC B2324: MIRROR DRIVER VERTICAL FEEDBACK POTENTIOMETER CIRCUIT FAILURE (Continued)

TEST CONDITIONS	TEST DETAILS/RESULTS/ACTIONS
B2324-5 CHECK THE LH OUTSIDE REAR VIEW MIRROR OPERATION	
	1 Operate the LH outside rear view mirror to the UP then DOWN position. • Does the LH outside rear view mirror move in either direction? → **Yes** GO to **B2324-6**. → **No** GO to **B2324-13**.
B2324-6 CHECK CIRCUIT 951 (DB/W) FOR A SHORT TO B+	
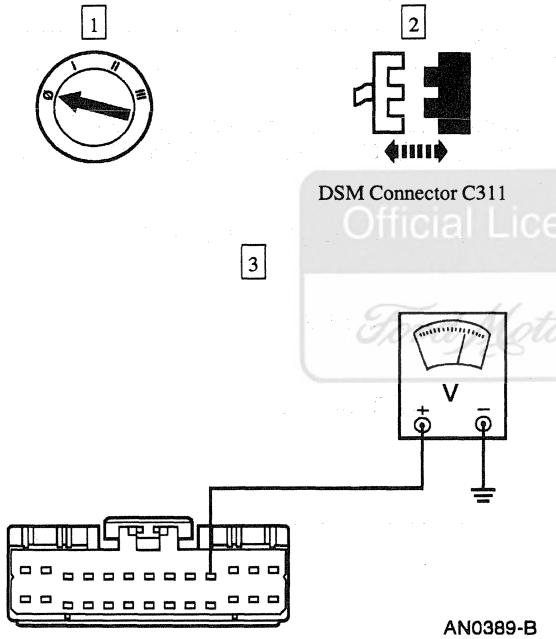	3 Measure the voltage at the DSM connector Pin C311-10, Circuit 951 (DB/W). • Is the voltage reading B+? → **Yes** REPAIR Circuit 951 (DB/W) for a short to B+. REPEAT the DSM self-test. → **No** GO to **B2324-7**.

Official Licensed Product
Ford Motor Company

(Continued)

DIAGNOSIS AND TESTING (Continued)

DTC B2324: MIRROR DRIVER VERTICAL FEEDBACK POTENTIOMETER CIRCUIT FAILURE (Continued)

TEST CONDITIONS	TEST DETAILS/RESULTS/ACTIONS
B2324-7 CHECK THE LH OUTSIDE REAR VIEW MIRROR VERTICAL POTENTIOMETER	
1 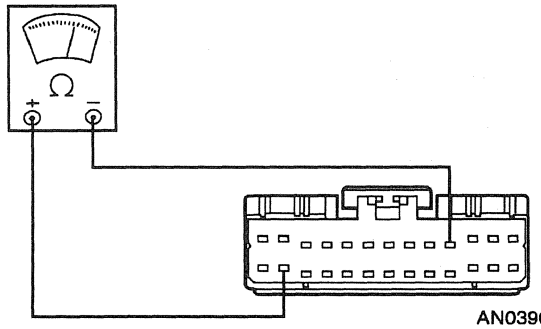 AN0390-B	1 Measure the resistance between the DSM connector Pin C311-10, Circuit 951 (DB/W) and Pin C311-15, Circuit 958 (GY/R). • Is the resistance 0.2 K - 5.5 K ohms? → **Yes** GO to **B2324-11**. → **No** GO to **B2324-8**.
B2324-8 CHECK CIRCUIT 951 (DB/W) FOR A SHORT TO GROUND	
1 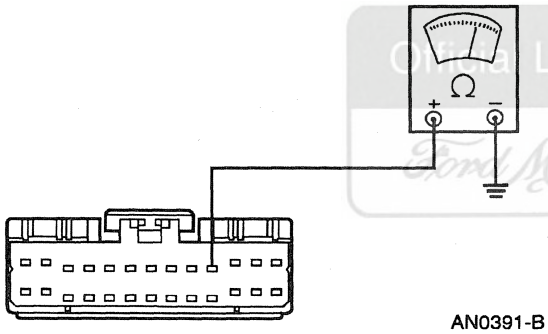 AN0391-B	1 Measure the resistance between the DSM connector Pin C311-10, Circuit 951 (DB/W) and ground. • Is the resistance 10 K ohms or less? → **Yes** GO to **B2324-9**. → **No** GO to **B2324-10**.

Official Licensed Product Ford Motor Company®

(Continued)

DIAGNOSIS AND TESTING (Continued)

DTC B2324: MIRROR DRIVER VERTICAL FEEDBACK POTENTIOMETER CIRCUIT FAILURE (Continued)

TEST CONDITIONS	TEST DETAILS/RESULTS/ACTIONS
B2324-9 CHECK THE LH OUTSIDE REAR VIEW MIRROR FOR A SHORT	
1 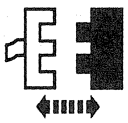 LH Outside Rear View Mirror Connector C509 2 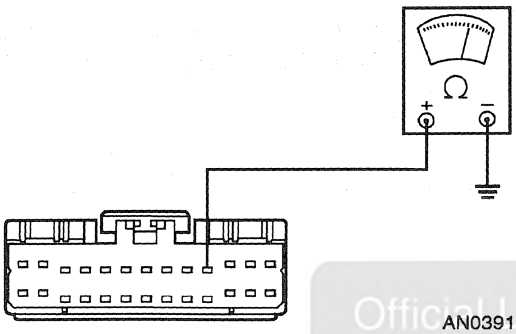 AN0391-B	2 Measure the resistance between the DSM connector Pin C311-10, Circuit 951 (DB/W) and ground. • Is the resistance 10 K ohms or less? → **Yes** REPAIR Circuit 951 (DB/W) for a short to ground. REPEAT the DSM self-test. → **No** REPLACE the LH outside rear view mirror motor. REPEAT the DSM self-test.
B2324-10 CHECK CIRCUIT 951 (DB/W) FOR AN OPEN	
1 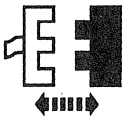 LH Outside Rear View Mirror Connector C509 2 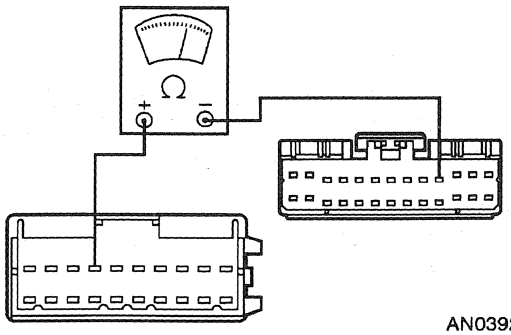 AN0392-B	2 Measure the resistance of Circuit 951 (DB/W) between the DSM connector Pin C311-10 and the LH outside rear view mirror connector Pin C509-4. • Is the resistance 5 ohms or less? → **Yes** REPLACE the LH outside rear view mirror motor. REPEAT the DSM self-test. → **No** REPAIR Circuit 951 (DB/W) for an open. REPEAT the DSM self-test.

Official Licensed Product Ford Motor Company

(Continued)

DIAGNOSIS AND TESTING (Continued)

DTC B2324: MIRROR DRIVER VERTICAL FEEDBACK POTENTIOMETER CIRCUIT FAILURE (Continued)

TEST CONDITIONS	TEST DETAILS/RESULTS/ACTIONS
B2324-11 CHECK THE LH OUTSIDE REAR VIEW MIRROR VERTICAL POTENTIOMETER FOR AN OPEN	
1 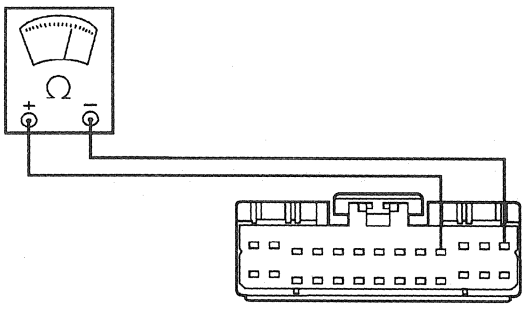 AN0393-B	1 Measure the resistance between the DSM connector Pin C311-10, Circuit 951 (DB/W) and Pin C311-13, Circuit 955 (GY). • Is the resistance 0.2 K - 5.5 K ohms? → **Yes** GO to **B2324-12**. → **No** REPLACE the LH outside rear view mirror motor. REPEAT the DSM self-test.
B2324-12 COMMAND THE MIRROR OPERATION	
1 DSM Connector C311 2 LH Outside Rear View Mirror Connector C509 3 4 DSM ACTIVE COMMAND - POWER MIRROR CONTROL 5 Select DSM PID DMIR__V	6 Trigger DR UP ON for 5 seconds, then DR DOWN ON for 5 seconds, then DR UP ON for 5 seconds, while monitoring the PID DMIR__V. • Does the PID DMIR__V change from NOTSEN to SENSED as the directions are commanded ON? → **Yes** The system is functioning properly. → **No** REPLACE the driver seat module. REPEAT the DSM self-test.

Official Licensed Product Ford Motor Company

(Continued)

DIAGNOSIS AND TESTING (Continued)

DTC B2324: MIRROR DRIVER VERTICAL FEEDBACK POTENTIOMETER CIRCUIT FAILURE (Continued)

TEST CONDITIONS	TEST DETAILS/RESULTS/ACTIONS
B2324-13 CHECK THE LH OUTSIDE REAR VIEW MIRROR MOTOR	
1 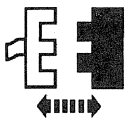 LH Outside Rear View Mirror Connector C509 2 DSM ACTIVE COMMAND - POWER MIRROR CONTROL 3 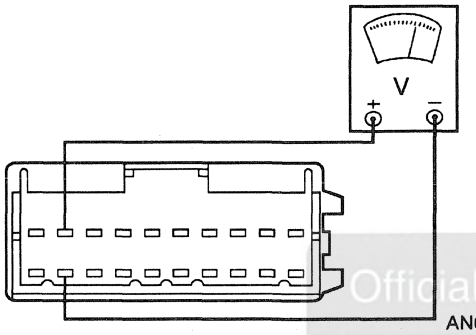 AN0377-B 4 Trigger DR UP ON	3 Measure the voltage between the LH outside rear view mirror connector Pin C509-2, Circuit 541 (DB) and Pin C509-12, Circuit 948 (Y/LB). • Is the voltage reading B+? → **Yes** REPLACE the LH outside rear view mirror motor. REPEAT the DSM self-test. → **No** GO to **B2324-14**.

Official Licensed Product
Ford Motor Company

(Continued)

DIAGNOSIS AND TESTING (Continued)

DTC B2324: MIRROR DRIVER VERTICAL FEEDBACK POTENTIOMETER CIRCUIT FAILURE (Continued)

TEST CONDITIONS	TEST DETAILS/RESULTS/ACTIONS
B2324-14 ISOLATE THE SHORT TO GROUND	
1 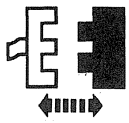 DSM Connector C311 2 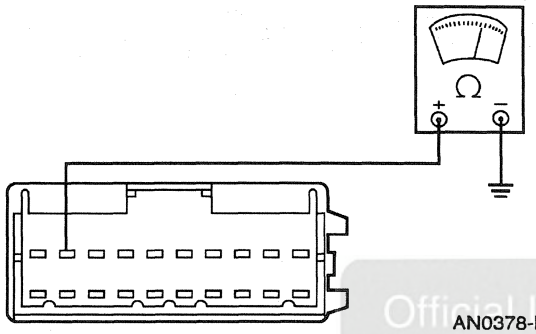 AN0378-B	2 Measure the resistance between the LH outside rear view mirror connector Pin C509-2, Circuit 541 (DB) and ground. • Is the resistance 10 K ohms or less? → **Yes** REPAIR Circuit 541 (DB) for a short to ground. REPEAT the DSM self-test. → **No** GO to **B2324-15**.
B2324-15 CHECK CIRCUIT 948 (Y/LB) FOR A SHORT TO GROUND	
1 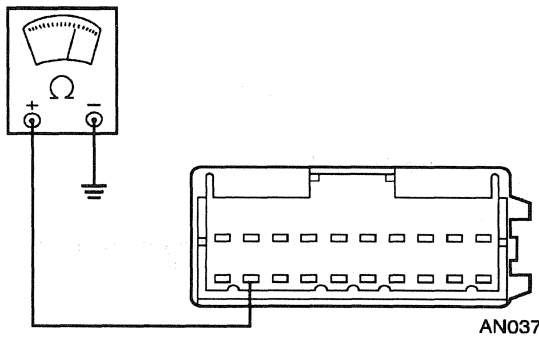 AN0379-B	1 Measure the resistance between the LH outside rear view mirror connector Pin C509-12, Circuit 948 (Y/LB) and ground. • Is the resistance 10 K ohms or less? → **Yes** REPAIR Circuit 948 (Y/LB) for a short to ground. REPEAT the DSM self-test. → **No** GO to **B2324-16**.

Official Licensed Product
Ford Motor Company

(Continued)

DIAGNOSIS AND TESTING (Continued)

DTC B2324: MIRROR DRIVER VERTICAL FEEDBACK POTENTIOMETER CIRCUIT FAILURE (Continued)

TEST CONDITIONS	TEST DETAILS/RESULTS/ACTIONS
B2324-16 CHECK CIRCUIT 541 (DB) FOR AN OPEN	
1 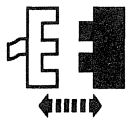 DSM Connector C311 2 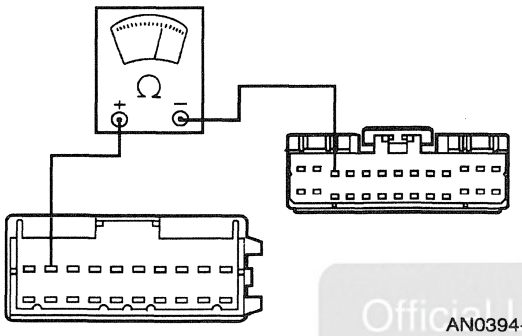 AN0394-B	2 Measure the resistance of Circuit 541 (DB) between the DSM connector Pin C311-3 and the LH outside rear view mirror connector Pin C509-2. • Is the resistance 5 ohms or less? → **Yes** GO to **B2324-17**. → **No** REPAIR Circuit 541 (DB) for an open. REPEAT the DSM self-test.
B2324-17 CHECK CIRCUIT 948 (Y/LB) FOR AN OPEN	
1 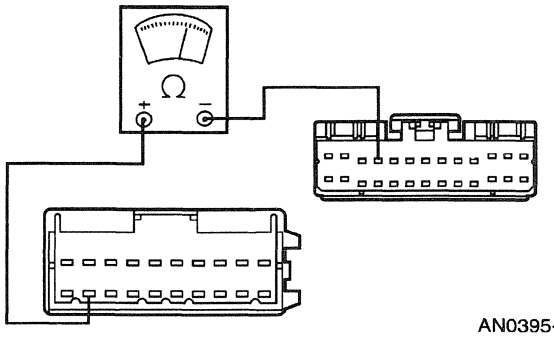 AN0395-B	1 Measure the resistance of Circuit 948 (Y/LB) between the DSM connector Pin C311-4 and the LH outside rear view mirror connector Pin C509-12. • Is the resistance 5 ohms or less? → **Yes** REPLACE the driver seat module. REPEAT the DSM self-test. → **No** REPAIR Circuit 948 (Y/LB) for an open. REPEAT the DSM self-test.

Official Licensed Product
Ford Motor Company

DIAGNOSIS AND TESTING (Continued)

DTC U1181: SCP INVALID OR MISSING DATA FOR PERSONALIZATION FEATURES

TEST CONDITIONS	TEST DETAILS/RESULTS/ACTIONS
U1181-1 CHECK COMMUNICATION	
1 2 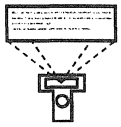 Data Link Diagnostic Test	• Is response for driver door module DDM - NO RESPONSE/NOT EQUIPPED? → **Yes** GO to Pinpoint Test D. → **No** GO to **U1181-2**.
U1181-2 CLEAR DTCS	
1 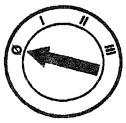 2 Clear DSM DTCs 4 Retrieve DSM Continuous DTCs	3 Turn ignition switch to RUN and wait 5 seconds. • Is the DTC U1181 retrieved? → **Yes** REPLACE the driver door module. REPEAT the DSM self-test. → **No** The system is operating properly at this time.

Official Licensed Product
Ford Motor Company

DIAGNOSIS AND TESTING (Continued)

PINPOINT TEST A: MIRROR/SEAT POTENTIOMETER FEED OR RETURN CIRCUIT FAILURE (DTCS B1950, B1954, B1958, B1962, B2312, B2316, B2320 AND B2324 ALL SET)

TEST CONDITIONS	TEST DETAILS/RESULTS/ACTIONS
A1 CHECK CIRCUIT 875 (BK/LB)	
1 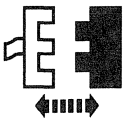 DSM Connector C311 2 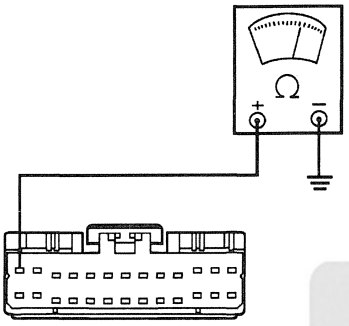 AN0431-B	2 Measure the resistance between the DSM connector Pin C311-1, Circuit 875 (BK/LB) and ground. • Is the resistance reading 5 ohms or less? → **Yes** GO to **A2**. → **No** REPAIR Circuit 875 (BK/LB) for an open. REPEAT the DSM self-test.
A2 CHECK CIRCUIT 958 (GY/R) FOR A SHORT TO B+	
1 2 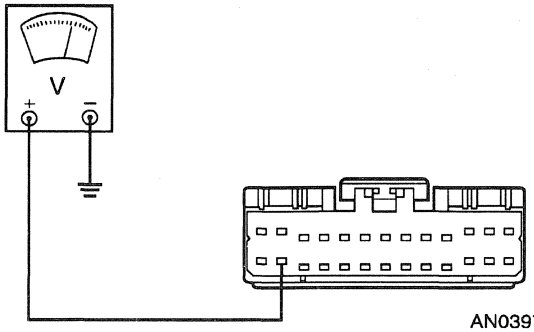 AN0397-B	2 Measure the voltage at the DSM connector Pin C311-15, Circuit 958 (GY/R). • Is the voltage reading B+? → **Yes** GO to **A3**. → **No** GO to **A9**.

(Continued)

Official Licensed Product Ford Motor Company

DIAGNOSIS AND TESTING (Continued)

PINPOINT TEST A: MIRROR/SEAT POTENTIOMETER FEED OR RETURN CIRCUIT FAILURE (DTCS B1950, B1954, B1958, B1962, B2312, B2316, B2320 AND B2324 ALL SET) (Continued)

TEST CONDITIONS	TEST DETAILS/RESULTS/ACTIONS
A3 CHECK RH OUTSIDE REAR VIEW MIRROR	
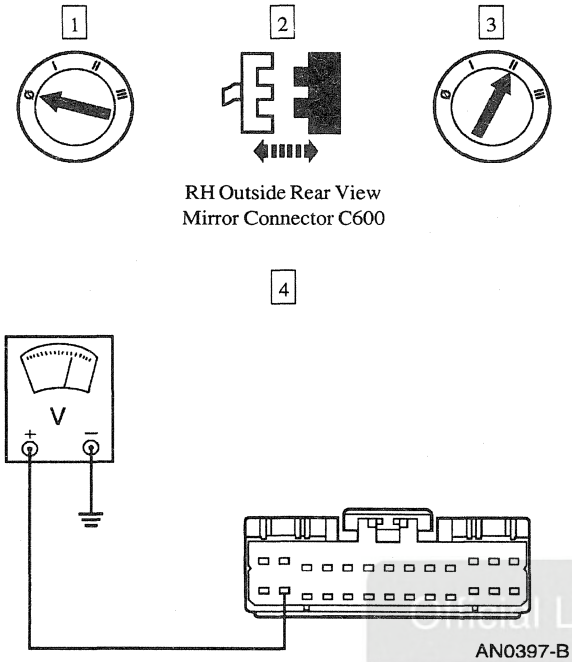	4 Measure the voltage at the DSM connector Pin C311-15, Circuit 958 (GY/R). • Is the voltage reading B+? → **Yes** GO to **A6**. → **No** GO to **A4**.
A4 CHECK CIRCUIT 954 (DG/W) FOR A SHORT TO B+	
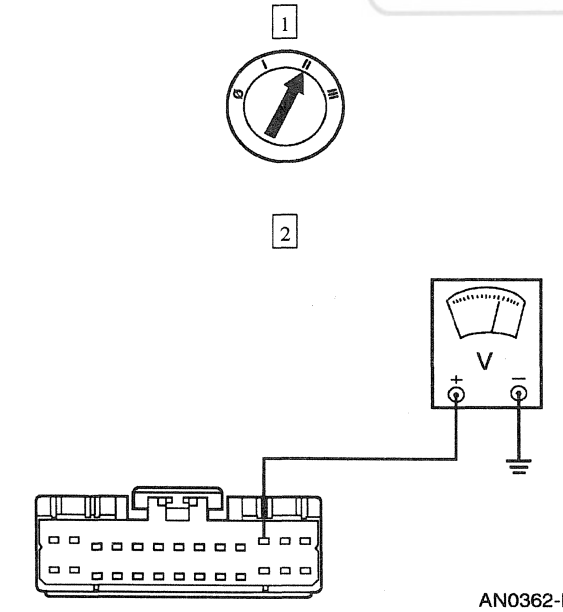	2 Measure the voltage at the DSM connector Pin C311-11, Circuit 954 (DG/W). • Is the voltage reading B+? → **Yes** REPAIR Circuit 954 (DG/W) for a short to B+. REPEAT the DSM self-test. → **No** GO to **A5**.

(Continued)

Ford Licensed Product

DIAGNOSIS AND TESTING (Continued)

PINPOINT TEST A: MIRROR/SEAT POTENTIOMETER FEED OR RETURN CIRCUIT FAILURE (DTCS B1950, B1954, B1958, B1962, B2312, B2316, B2320 AND B2324 ALL SET) (Continued)

TEST CONDITIONS	TEST DETAILS/RESULTS/ACTIONS
A5 CHECK CIRCUIT 957 (P/W) FOR A SHORT TO B+	
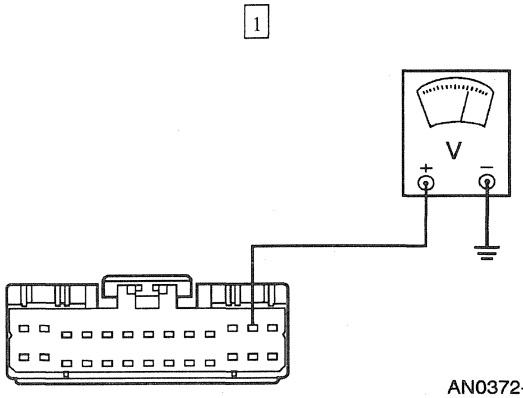	1 Measure the voltage at the DSM connector Pin C311-12, Circuit 957 (P/W). • Is the voltage reading B+? → **Yes** REPAIR Circuit 957 (P/W) for a short to B+. REPEAT the DSM self-test. → **No** REPLACE the RH outside rear view mirror. REPEAT the DSM self-test.
A6 CHECK THE LH OUTSIDE REAR VIEW MIRROR	
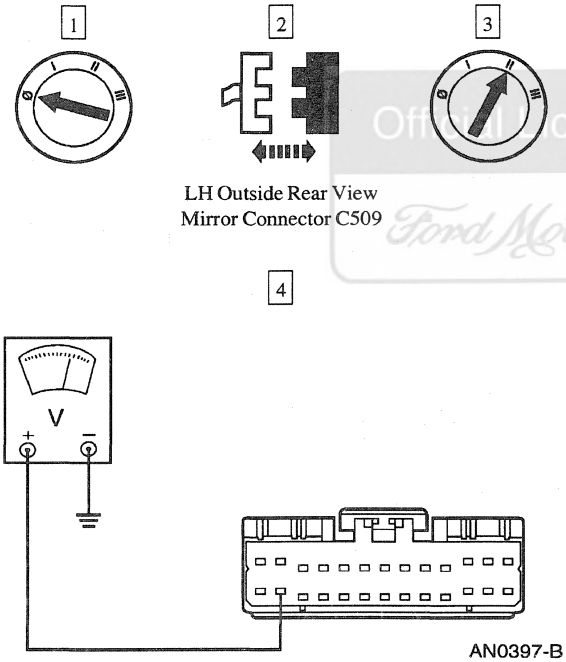	4 Measure the voltage at the DSM connector Pin C311-15, Circuit 958 (GY/R). • Is the voltage reading B+? → **Yes** REPAIR Circuit 958 (GY/R) for a short to B+. REPEAT the DSM self-test. → **No** GO to **A7**.

Official Licensed Product Ford Motor Company

(Continued)

DIAGNOSIS AND TESTING (Continued)

PINPOINT TEST A: MIRROR/SEAT POTENTIOMETER FEED OR RETURN CIRCUIT FAILURE (DTCS B1950, B1954, B1958, B1962, B2312, B2316, B2320 AND B2324 ALL SET) (Continued)

TEST CONDITIONS	TEST DETAILS/RESULTS/ACTIONS
A7 CHECK CIRCUIT 949 (R/W) FOR A SHORT TO B+	
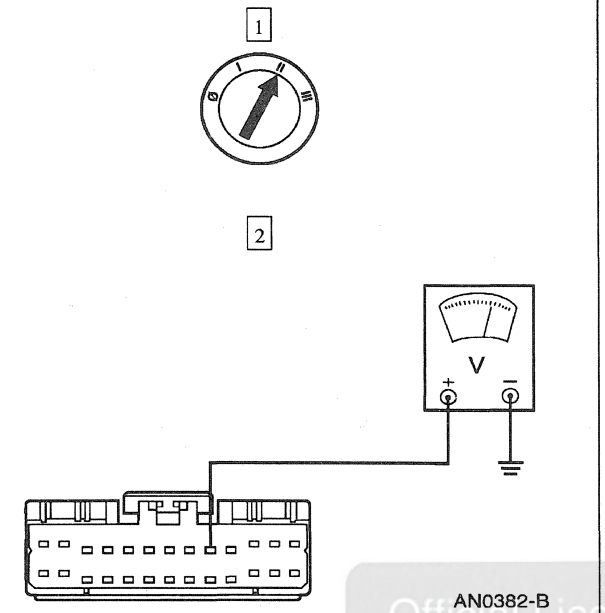	2 Measure the voltage at the DSM connector Pin C311-9, Circuit 949 (R/W). • Is the voltage reading B+? → **Yes** REPAIR Circuit 949 (R/W) for a short to B+. REPEAT the DSM self-test. → **No** GO to **A8**.
A8 CHECK CIRCUIT 951 (DB/W) FOR A SHORT TO B+	
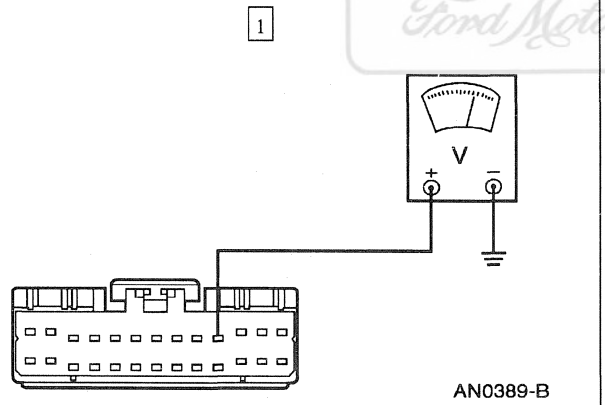	1 Measure the voltage at the DSM connector Pin C311-10, Circuit 951 (DB/W). • Is the voltage reading B+? → **Yes** REPAIR Circuit 951 (DB/W) for a short to B+. REPEAT the DSM self-test. → **No** REPLACE the LH outside rear view mirror. REPEAT the DSM self-test.

Official Licensed Product
Ford Motor Company

(Continued)

DIAGNOSIS AND TESTING (Continued)

PINPOINT TEST A: MIRROR/SEAT POTENTIOMETER FEED OR RETURN CIRCUIT FAILURE (DTCS B1950, B1954, B1958, B1962, B2312, B2316, B2320 AND B2324 ALL SET) (Continued)

TEST CONDITIONS	TEST DETAILS/RESULTS/ACTIONS
A9 CHECK CIRCUIT 446 (O/W) FOR A SHORT TO B+	
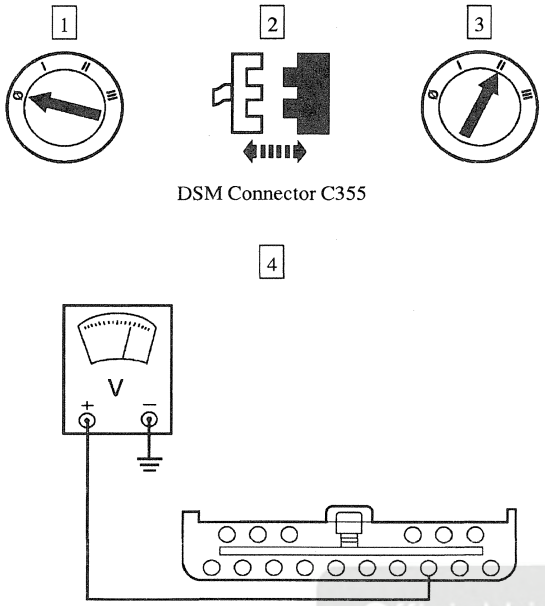	4 Measure the voltage at the DSM connector Pin C355-14, Circuit 446 (O/W) • Is the voltage reading B+? → **Yes** GO to **A10**. → **No** GO to **A14**.
A10 CHECK CIRCUIT 445 (O/LB) FOR A SHORT TO B+	
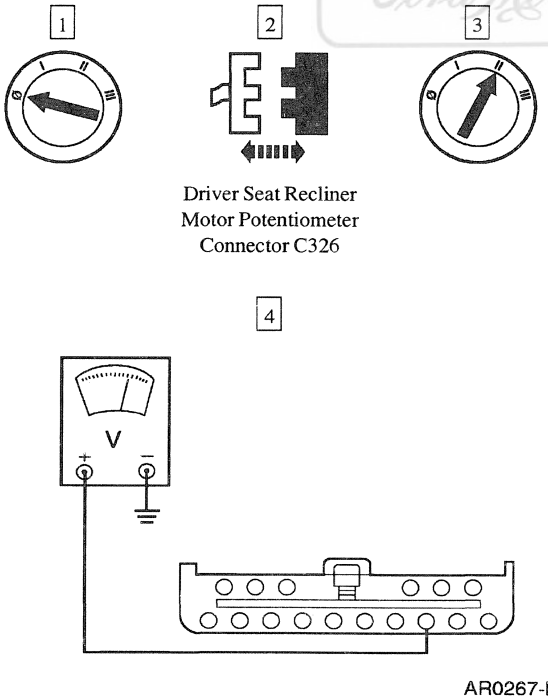	4 Measure the voltage at the DSM connector Pin C355-14, Circuit 446 (O/W). • Is the voltage reading B+? → **Yes** GO to **A11**. → **No** REPAIR Circuit 445 (O/LB) for a short to B+. REPEAT the DSM self-test.

Official Licensed Product Ford Motor Company

(Continued)

DIAGNOSIS AND TESTING (Continued)

PINPOINT TEST A: MIRROR/SEAT POTENTIOMETER FEED OR RETURN CIRCUIT FAILURE (DTCS B1950, B1954, B1958, B1962, B2312, B2316, B2320 AND B2324 ALL SET) (Continued)

TEST CONDITIONS	TEST DETAILS/RESULTS/ACTIONS
A11 CHECK CIRCUIT 442 (LG/O) FOR A SHORT TO B+	
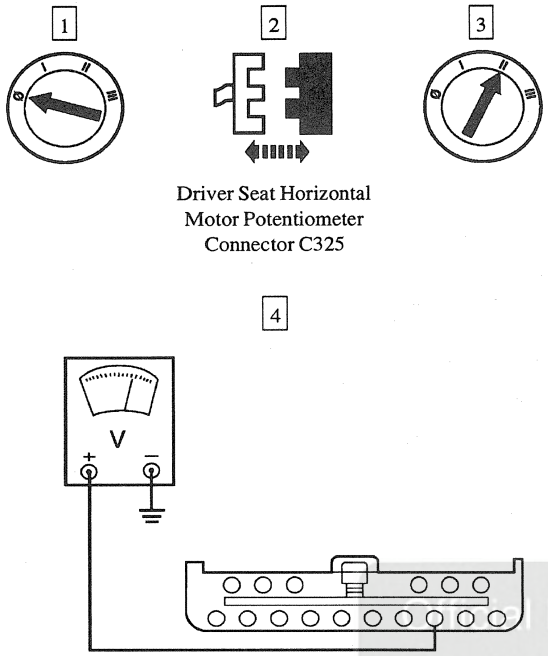	4 Measure the voltage at the DSM connector Pin C355-14, Circuit 446 (O/W). • Is the voltage reading B+? → **Yes** GO to **A12**. → **No** REPAIR Circuit 442 (LG/O) for a short to B+. REPEAT the DSM self-test.
A12 CHECK CIRCUIT 444 (LG/BK) FOR A SHORT TO B+	
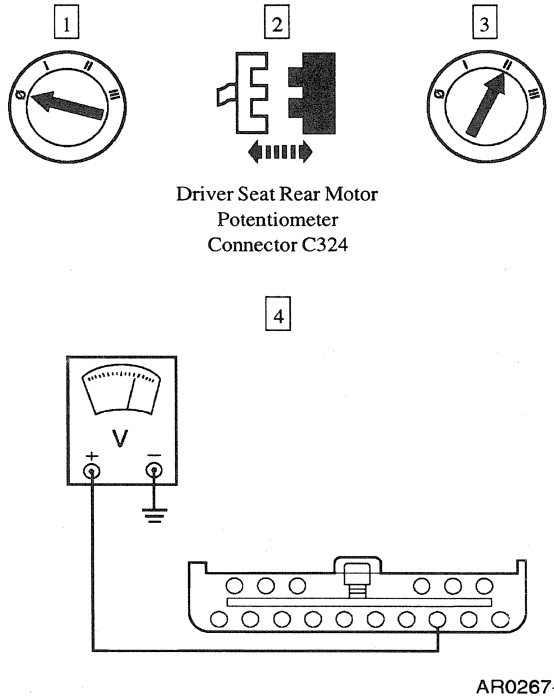	4 Measure the voltage at the DSM connector Pin C355-14, Circuit 446 (O/W). • Is the voltage reading B+? → **Yes** GO to **A13**. → **No** REPAIR Circuit 444 (LG/BK) for a short to B+. REPEAT the DSM self-test.

Ford Licensed Product Ford Motor Company

(Continued)

DIAGNOSIS AND TESTING (Continued)

PINPOINT TEST A: MIRROR/SEAT POTENTIOMETER FEED OR RETURN CIRCUIT FAILURE (DTCS B1950, B1954, B1958, B1962, B2312, B2316, B2320 AND B2324 ALL SET) (Continued)

TEST CONDITIONS	TEST DETAILS/RESULTS/ACTIONS
A13 CHECK CIRCUIT 443 (LG/R) FOR A SHORT TO B+	
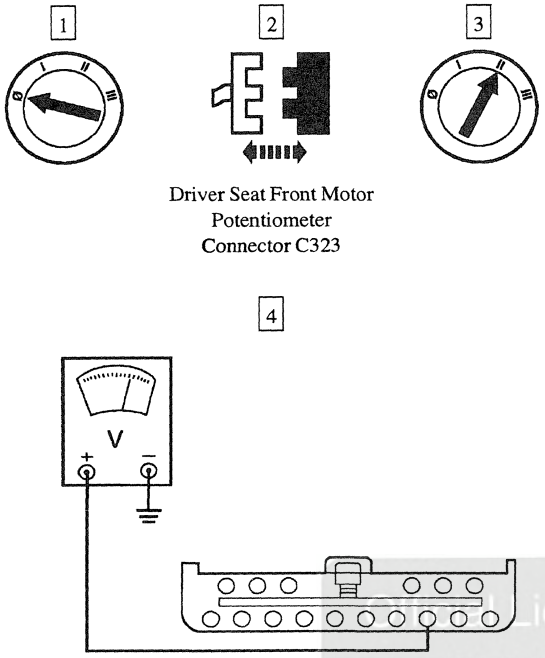	4 Measure the voltage at the DSM connector Pin C355-14, Circuit 446 (O/W). • Is the voltage reading B+? → **Yes** REPAIR Circuit 446 (O/W) for a short to B+. REPEAT the DSM self-test. → **No** REPAIR Circuit 443 (LG/R) for a short to B+. REPEAT the DSM self-test.
A14 CHECK CIRCUIT 446 (O/W) FOR A SHORT TO GROUND	
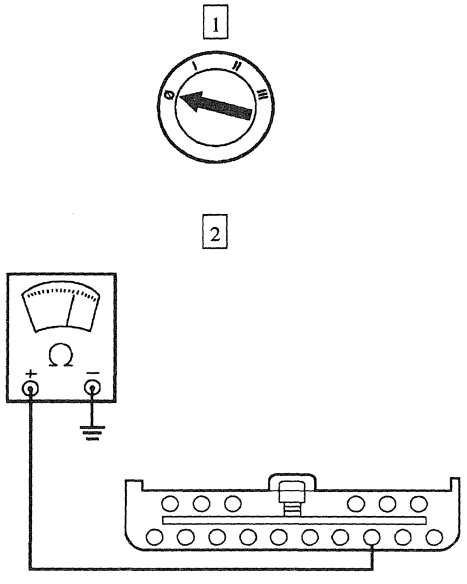	2 Measure the resistance between the DSM connector Pin C355-14, Circuit 446 (O/W) and ground. • Is the resistance 10 K ohms or less? → **Yes** GO to **A15**. → **No** GO to **A19**.

(Continued)

DIAGNOSIS AND TESTING (Continued)

PINPOINT TEST A: MIRROR/SEAT POTENTIOMETER FEED OR RETURN CIRCUIT FAILURE (DTCS B1950, B1954, B1958, B1962, B2312, B2316, B2320 AND B2324 ALL SET) (Continued)

TEST CONDITIONS	TEST DETAILS/RESULTS/ACTIONS
A15 CHECK CIRCUIT 445 (O/LB) FOR A SHORT TO GROUND	
1 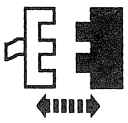 Driver Seat Recliner Motor Potentiometer Connector C326 2 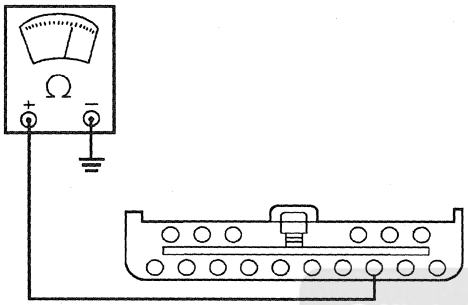 AR0265-B	2 Measure the resistance between the DSM connector Pin C355-14, Circuit 446 (O/W) and ground. • Is the resistance 10 K ohms or less? → **Yes** GO to **A16**. → **No** REPAIR Circuit 445 (O/LB) for a short to ground. REPEAT the DSM self-test.
A16 CHECK CIRCUIT 442 (LG/O) FOR A SHORT TO GROUND	
1 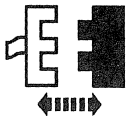 Driver Seat Horizontal Motor Potentiometer Connector C325 2 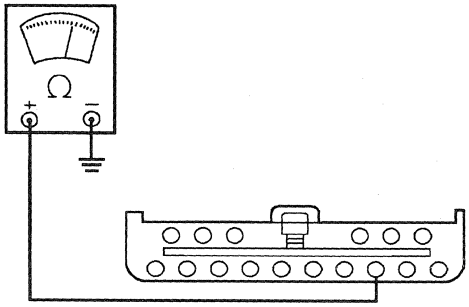 AR0265-B	2 Measure the resistance between the DSM connector Pin C355-14, Circuit 446 (O/W) and ground. • Is the resistance 10 K ohms or less? → **Yes** GO to **A17**. → **No** REPAIR Circuit 442 (LG/O) for a short to ground. REPEAT the DSM self-test.

Official Licensed Product Ford Motor Company

(Continued)

DIAGNOSIS AND TESTING (Continued)

PINPOINT TEST A: MIRROR/SEAT POTENTIOMETER FEED OR RETURN CIRCUIT FAILURE (DTCS B1950, B1954, B1958, B1962, B2312, B2316, B2320 AND B2324 ALL SET) (Continued)

TEST CONDITIONS	TEST DETAILS/RESULTS/ACTIONS
A17 CHECK CIRCUIT 444 (LG/BK) FOR A SHORT TO GROUND	
1 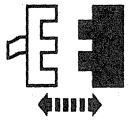 Driver Seat Rear Motor Potentiometer Connector C324 2 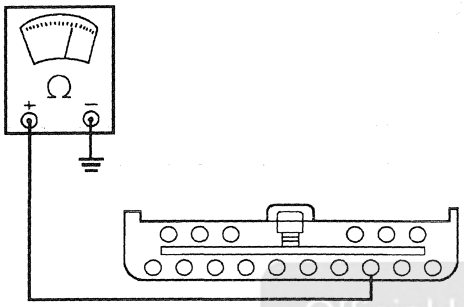 AR0265-B	2 Measure the resistance between the DSM connector Pin C355-14, Circuit 446 (O/W) and ground. • Is the resistance 10 K ohms or less? → **Yes** GO to **A18**. → **No** REPAIR Circuit 444 (LG/BK) for a short to ground. REPEAT the DSM self-test.
A18 CHECK CIRCUIT 443 (LG/R) FOR A SHORT TO GROUND	
1 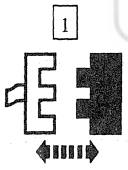 Driver Seat Front Motor Potentiometer Connector C323 2 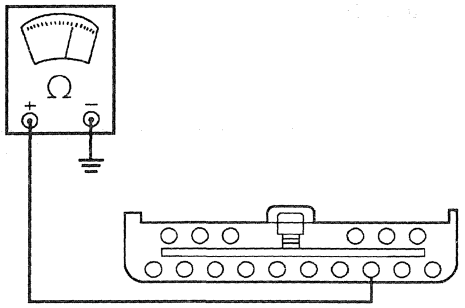 AR0265-B	2 Measure the resistance between the DSM connector Pin C355-14, Circuit 446 (O/W) and ground. • Is the resistance 10 K ohms or less? → **Yes** REPAIR Circuit 446 (O/W) for a short to ground. REPEAT the DSM self-test. → **No** REPAIR Circuit 443 (LG/R) for a short to ground. REPEAT the DSM self-test.

Official Licensed Product Ford Motor Company

(Continued)

DIAGNOSIS AND TESTING (Continued)

PINPOINT TEST A: MIRROR/SEAT POTENTIOMETER FEED OR RETURN CIRCUIT FAILURE (DTCS B1950, B1954, B1958, B1962, B2312, B2316, B2320 AND B2324 ALL SET) (Continued)

TEST CONDITIONS	TEST DETAILS/RESULTS/ACTIONS
A19 CHECK CIRCUIT 958 (GY/R) FOR A SHORT TO GROUND	
1 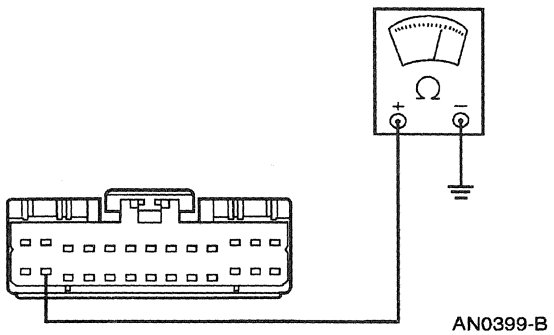 AN0399-B	1 Measure the resistance between the DSM connector Pin C311-15, Circuit 958 (GY/R) and ground. • Is the resistance 10 K ohms or less? → **Yes** GO to **A20**. → **No** GO to **A26**.
A20 CHECK FOR SHORTED LH MIRROR	
1 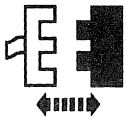 LH Outside Rear View Mirror Connector C509 2 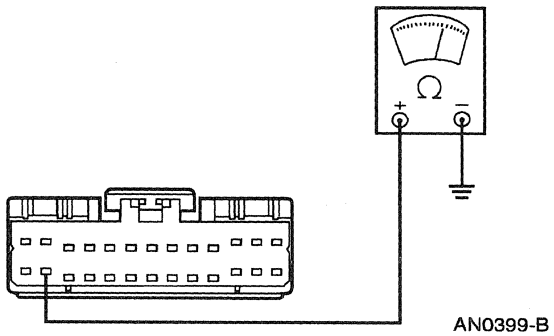 AN0399-B	2 Measure the resistance between the DSM connector Pin C311-15, Circuit 958 (GY/R) and ground. • Is the resistance 10 K ohms or less? → **Yes** GO to **A23**. → **No** GO to **A21**.

Official Licensed Product
Ford Motor Company

(Continued)

DIAGNOSIS AND TESTING (Continued)

PINPOINT TEST A: MIRROR/SEAT POTENTIOMETER FEED OR RETURN CIRCUIT FAILURE (DTCS B1950, B1954, B1958, B1962, B2312, B2316, B2320 AND B2324 ALL SET) (Continued)

TEST CONDITIONS	TEST DETAILS/RESULTS/ACTIONS
A21 CHECK CIRCUIT 951 (DB/W) FOR A SHORT TO GROUND	
[1] 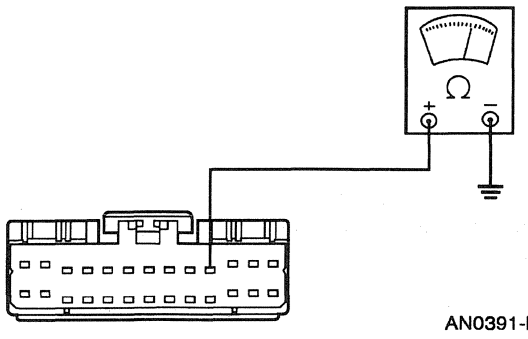 AN0391-B	[1] Measure the resistance between the DSM connector Pin C311-10, Circuit 951 (DB/W) and ground. • Is the resistance 10 K ohms or less? → **Yes** REPAIR Circuit 951 (DB/W) for a short to ground. REPEAT the DSM self-test. → **No** GO to **A22**.
A22 CHECK CIRCUIT 949 (R/W) FOR A SHORT TO GROUND	
[1] 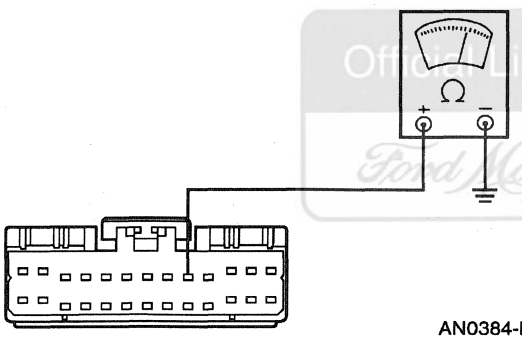 AN0384-B	[1] Measure the resistance between the DSM connector Pin C311-9, Circuit 949 (R/W) and ground. • Is the resistance 10 K ohms or less? → **Yes** REPAIR Circuit 949 (R/W) for a short to ground. REPEAT the DSM self-test. → **No** REPLACE the LH outside rear view mirror. REPEAT the DSM self-test.

Official Licensed Product Ford Motor Company

(Continued)

DIAGNOSIS AND TESTING (Continued)

PINPOINT TEST A: MIRROR/SEAT POTENTIOMETER FEED OR RETURN CIRCUIT FAILURE (DTCS B1950, B1954, B1958, B1962, B2312, B2316, B2320 AND B2324 ALL SET) (Continued)

TEST CONDITIONS	TEST DETAILS/RESULTS/ACTIONS
A23 CHECK FOR A SHORTED RH MIRROR	
1 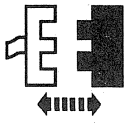 RH Outside Rear View Mirror Connector C600 2 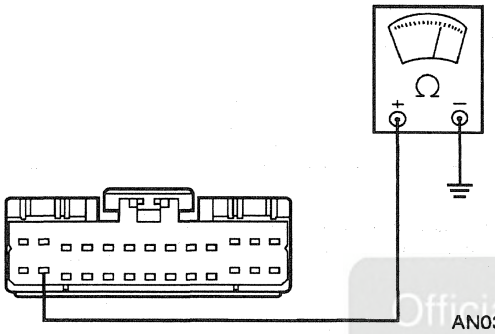 AN0399-B	2 Measure the resistance between the DSM connector Pin C311-15, Circuit 958 (GY/R) and ground. • Is the resistance 10 K ohms or less? → **Yes** REPAIR Circuit 958 (GY/R) for a short to ground. REPEAT the DSM self-test. → **No** GO to **A24**.
A24 CHECK CIRCUIT 957 (P/W) FOR A SHORT TO GROUND	
1 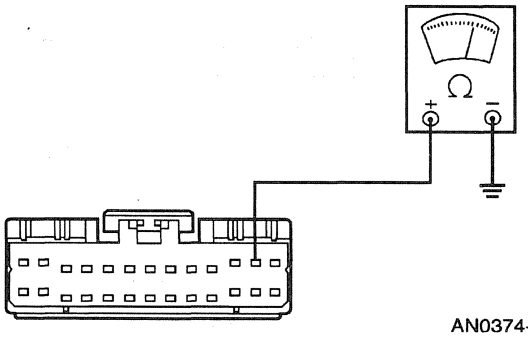 AN0374-B	1 Measure the resistance between the DSM connector Pin C311-12, Circuit 957 (P/W) and ground. • Is the resistance 10 K ohms or less? → **Yes** REPAIR Circuit 957 (P/W) for a short to ground. REPEAT the DSM self-test. → **No** GO to **A25**.

Official Licensed Product Ford Motor Company

(Continued)

DIAGNOSIS AND TESTING (Continued)

PINPOINT TEST A: MIRROR/SEAT POTENTIOMETER FEED OR RETURN CIRCUIT FAILURE (DTCS B1950, B1954, B1958, B1962, B2312, B2316, B2320 AND B2324 ALL SET) (Continued)

TEST CONDITIONS	TEST DETAILS/RESULTS/ACTIONS
A25 CHECK CIRCUIT 954 (DG/W) FOR A SHORT TO GROUND	
[1] 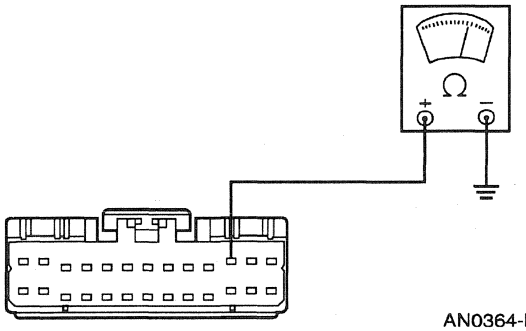 AN0364-B	[1] Measure the resistance between the DSM connector Pin C311-11, Circuit 954 (DG/W) and ground. • Is the resistance 10 K ohms or less? → **Yes** REPAIR Circuit 954 (DG/W) for a short to ground. REPEAT the DSM self-test. → **No** REPLACE the RH outside rear view mirror. REPEAT the DSM self-test.
A26 CHECK FOR A CIRCUIT TO CIRCUIT SHORT	
[1] 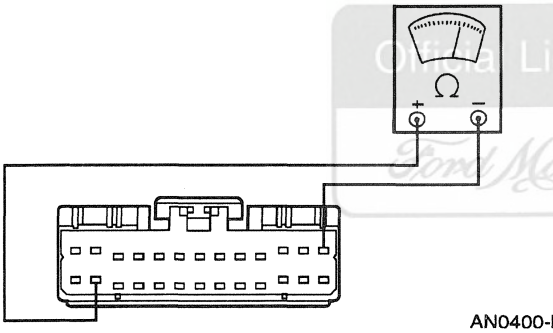 AN0400-B	[1] Measure the resistance between the DSM connector Pin C311-13, Circuit 955 (GY) and Pin C311-15, Circuit 958 (GY/R). • Is the resistance 100 ohms or less? → **Yes** GO to **A27**. → **No** GO to **A29**.

Ford Motor Company Licensed Product

(Continued)

DIAGNOSIS AND TESTING (Continued)

PINPOINT TEST A: MIRROR/SEAT POTENTIOMETER FEED OR RETURN CIRCUIT FAILURE (DTCS B1950, B1954, B1958, B1962, B2312, B2316, B2320 AND B2324 ALL SET) (Continued)

TEST CONDITIONS	TEST DETAILS/RESULTS/ACTIONS
A27 CHECK THE RH MIRROR	
1 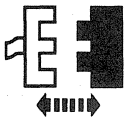 RH Outside Rear View Mirror Connector C600 2 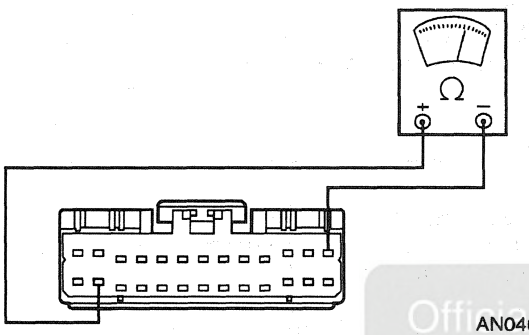 AN0400-B	2 Measure the resistance between the DSM connector Pin C311-13, Circuit 955 (GY) and Pin C311-15, Circuit 958 (GY/R) • Is the resistance 100 ohms or less? → **Yes** GO to **A28**. → **No** REPLACE the RH outside rear view mirror. REPEAT the DSM self-test.
A28 CHECK THE LH MIRROR	
1 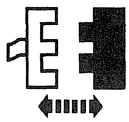 LH Outside Rear View Mirror Connector C509 2 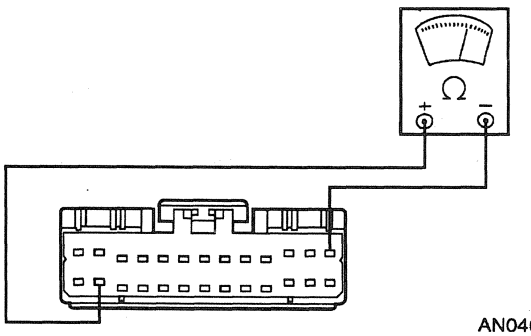 AN0400-B	2 Measure the resistance between the DSM connector Pin C311-13, Circuit 955 (GY) and Pin C311-15, Circuit 958 (GY/R). • Is the resistance 100 ohms or less? → **Yes** REPAIR Circuit 958 (GY/R) and Circuit 955 (GY) for a circuit to circuit short. REPEAT the DSM self-test. → **No** REPLACE the LH outside rear view mirror. REPEAT the DSM self-test.

Official Licensed Product
Ford Motor Company

(Continued)

DIAGNOSIS AND TESTING (Continued)

PINPOINT TEST A: MIRROR/SEAT POTENTIOMETER FEED OR RETURN CIRCUIT FAILURE (DTCS B1950, B1954, B1958, B1962, B2312, B2316, B2320 AND B2324 ALL SET) (Continued)

TEST CONDITIONS	TEST DETAILS/RESULTS/ACTIONS
A29 CHECK CIRCUIT 447 (O/R) AND CIRCUIT 446 (O/W) FOR A SHORT	
1 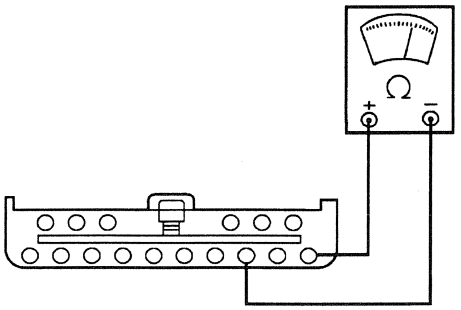 AN0668-A	1 Measure the resistance between the DSM connector Pin C355-14, Circuit 446 (O/R) and Pin C355-16, Circuit 447 (O/R). • Is the resistance 100 ohms or less? → **Yes** REPAIR Circuit 447 (O/R) and Circuit 446 (O/W) for a circuit to circuit short. REPEAT the DSM self-test. → **No** GO to **A30**.
A30 RECHECK SELF-TEST	
2 3 DSM Self-Test	1 Restore the vehicle. • Are DTCs B1950, B1954, B1958, B1962, B2312, B2316, B2320 and B2324 retrieved? → **Yes** REPLACE the driver seat module. REPEAT the DSM self-test. → **No** USE Active Command PID LATCH and PIDs SRCL__MT, SFWD__MT, SREARMT, SFNT__MT, PMIR__H, PMIR__V, DMIR__H and DMIR__V to identify intermittent concern.

Official Licensed Product
Ford Motor Company

DIAGNOSIS AND TESTING (Continued)

PINPOINT TEST B: DTC B2312, B2316, B2320 AND B2324 MIRROR POTENTIOMETER FEED OR RETURN CIRCUIT FAILURE

TEST CONDITIONS	TEST DETAILS/RESULTS/ACTIONS
B1 CHECK FOR DTCS	
1 2 DSM Self-Test	• Are DTCs B1950, B1954, B1958 and B1962 retrieved? → **Yes** GO to Pinpoint Test A. → **No** GO to **B2.**
B2 CHECK CIRCUIT 958 (GY/R) FOR SHORT TO B+	
1 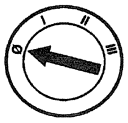 2 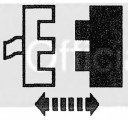 DSM Connector C311 3 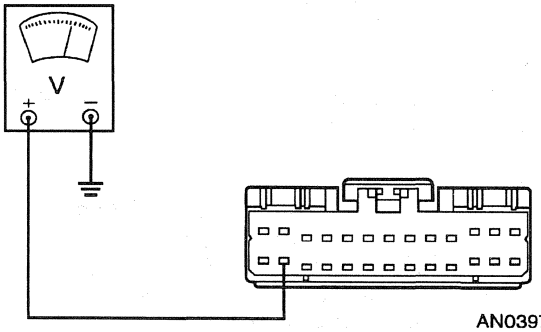 AN0397-B	3 Measure the voltage at the DSM connector Pin C311-15, Circuit 958 (GY/R). • Is the voltage reading B+? → **Yes** GO to Pinpoint Test A to continue diagnosis. → **No** GO to **B3.**

Official Licensed Product Ford Motor Company

(Continued)

DIAGNOSIS AND TESTING (Continued)

PINPOINT TEST B: DTC B2312, B2316, B2320 AND B2324 MIRROR POTENTIOMETER FEED OR RETURN CIRCUIT FAILURE (Continued)

TEST CONDITIONS	TEST DETAILS/RESULTS/ACTIONS
B3 CHECK CIRCUIT 958 (GY/R) FOR A SHORT TO GROUND	
1 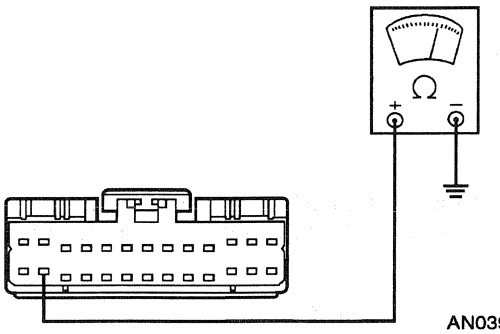 AN0399-B	1 Measure the resistance between the DSM connector Pin C311-15, Circuit 958 (GY/R) and ground. • Is the resistance 10 K ohms or less? → **Yes** GO to **B4**. → **No** GO to **B6**.
B4 CHECK THE LH OUTSIDE REAR VIEW MIRROR	
1 LH Outside Rear View Mirror Connector C509 2 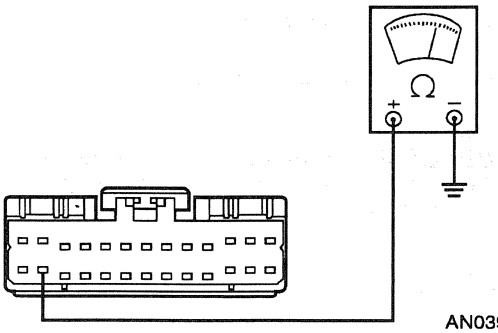 AN0399-B	2 Measure the resistance between the DSM connector Pin C311-15, Circuit 958 (GY/R) and ground. • Is the resistance 10 K ohms or less? → **Yes** GO to **B5**. → **No** REPLACE THE LH outside rear view mirror. REPEAT the DSM self-test.

Official Licensed Product
Ford Motor Company

(Continued)

DIAGNOSIS AND TESTING (Continued)

PINPOINT TEST B: DTC B2312, B2316, B2320 AND B2324 MIRROR POTENTIOMETER FEED OR RETURN CIRCUIT FAILURE (Continued)

TEST CONDITIONS	TEST DETAILS/RESULTS/ACTIONS
B5 CHECK THE RH OUTSIDE REAR VIEW MIRROR	
1 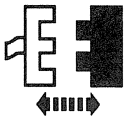 RH Outside Rear View Mirror Connector C600 2 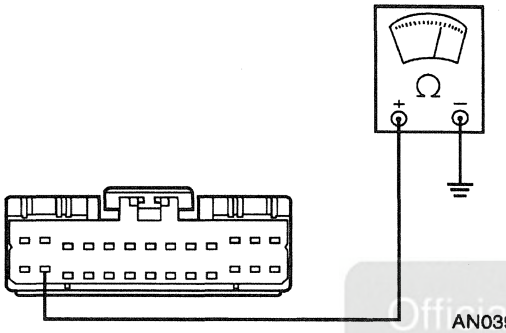 AN0399-B	2 Measure the resistance between the DSM connector Pin C311-15, Circuit 958 (GY/R) and ground. • Is the resistance 10 K ohms or less? → **Yes** REPAIR Circuit 958 (GY/R) for a short to ground. REPEAT the DSM self-test. → **No** REPLACE the RH outside rear view mirror. REPEAT the DSM self-test.
B6 CHECK FOR A CIRCUIT TO CIRCUIT SHORT	
1 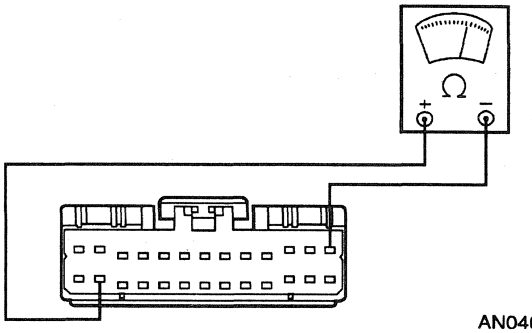 AN0400-B	1 Measure the resistance between the DSM connector Pin C311-13, Circuit 955 (GY) and Pin C311-15, Circuit 958 (GY/R). • Is the resistance 5 ohms or less? → **Yes** REPAIR the circuit to circuit short between Circuit 955 (GY) and Circuit 958 (GY/R). REPEAT the DSM self-test. → **No** GO to **B7**.

Official Licensed Product
Ford Motor Company

(Continued)

DIAGNOSIS AND TESTING (Continued)

PINPOINT TEST B: DTC B2312, B2316, B2320 AND B2324 MIRROR POTENTIOMETER FEED OR RETURN CIRCUIT FAILURE (Continued)

TEST CONDITIONS	TEST DETAILS/RESULTS/ACTIONS
B7 CHECK CIRCUIT 958 (GY/R) FOR AN OPEN	
1 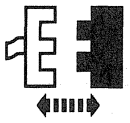 LH Outside Rear View Mirror Connector C509 2 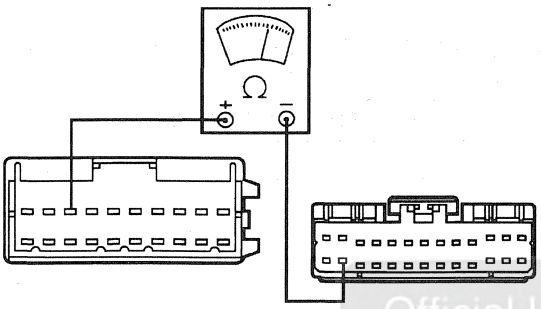 AN0667-A	2 Measure the resistance of Circuit 958 (GY/R) between the DSM connector Pin C311-15 and the LH outside rear view mirror connector C509-3. • Is the resistance 5 ohms or less? → **Yes** GO to **B8**. → **No** REPAIR Circuit 958 (GY/R) for an open. REPEAT the DSM self-test.
B8 CHECK CIRCUIT 955 (GY) FOR AN OPEN	
1 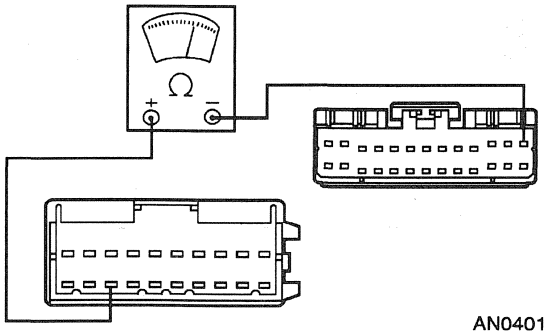 AN0401-B	1 Measure the resistance of Circuit 955 (GY) between the DSM connector Pin C311-13 and the LH outside rear view mirror connector C509-13. • Is the resistance 5 ohms or less? → **Yes** GO to **B9**. → **No** REPAIR Circuit 955 (GY) for an open. REPEAT the DSM self-test.
B9 RECHECK SELF-TEST	
2 3 DSM Self-Test	1 Restore the vehicle.

Official Licensed Product Ford Motor Company

(Continued)

DIAGNOSIS AND TESTING (Continued)

PINPOINT TEST B: DTC B2312, B2316, B2320 AND B2324 MIRROR POTENTIOMETER FEED OR RETURN CIRCUIT FAILURE (Continued)

TEST CONDITIONS	TEST DETAILS/RESULTS/ACTIONS
B9 RECHECK SELF-TEST (Continued)	
	• Are DTCs B2312, B2316, B2320 and B2324 retrieved? → **Yes** REPLACE the driver seat module. REPEAT the DSM self-test. → **No** USE Active Command PID LATCH and PIDs PMIR__H, PMIR__V, DMIR__H and DMIR__V to identify intermittent concern.

PINPOINT TEST C: U1180, U1194 SCP INVALID OR MISSING DATA FOR MIRRORS OR MEMORY FEATURES FROM DDM

TEST CONDITIONS	TEST DETAILS/RESULTS/ACTIONS
C1 CHECK DTCS	
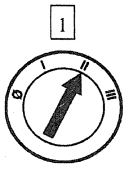 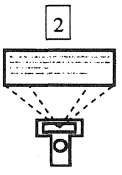 Clear DDM DTCs 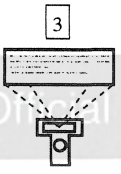 DDM Self-Test	• Is the DTC B1529 or B1539 retrieved? → **Yes** REFER to the Driver Door Module Diagnostic Trouble Code (DTC) Index to continue DTC diagnostics. → **No** GO to **C2.**
C2 CHECK COMMUNICATION WITH THE DRIVER DOOR MODULE	
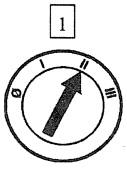 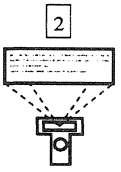 DDM Data Link Diagnostic Test	• Is the response for the driver door module DDM - NO RESPONSE/NOT EQUIPPED? → **Yes** GO to Pinpoint Test D. → **No** GO to **C3.**

(Continued)

Official Licensed Product
Ford Motor Company

DIAGNOSIS AND TESTING (Continued)

PINPOINT TEST C: U1180, U1194 SCP INVALID OR MISSING DATA FOR MIRRORS OR MEMORY FEATURES FROM DDM (Continued)

TEST CONDITIONS	TEST DETAILS/RESULTS/ACTIONS
C3 CHECK FOR THE DTC U1180 OR U1194	
1 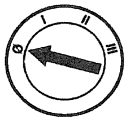 2 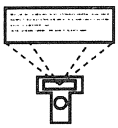 Clear DSM DTCs 4 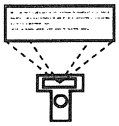 Retrieve DSM Continuous DTCs	3 Turn the ignition switch to RUN. Wait 5 seconds. • Is the DTC U1180 or U1194 retrieved? → **Yes** REPLACE the driver door module. REPEAT the DSM self-test. → **No** The system is operating properly at this time.

Official Licensed Product
Ford Motor Company

DIAGNOSIS AND TESTING (Continued)

PINPOINT TEST D: NO COMMUNICATION WITH DRIVER DOOR MODULE

TEST CONDITIONS	TEST DETAILS/RESULTS/ACTIONS
D1 CHECK THE POWER SUPPLY TO THE DRIVER DOOR MODULE	
1 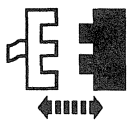 DDM Connector C457 2 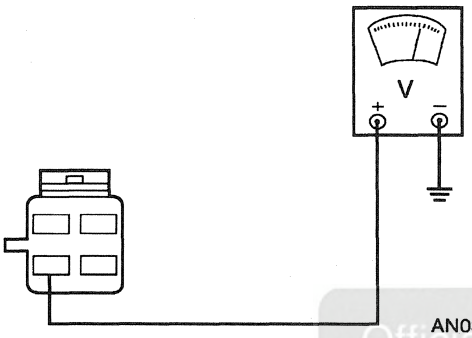 AN0359-B	2 Measure the voltage at the DDM connector Pin C457-3, Circuit 1077 (DG/P). • Is the voltage B+? → **Yes** GO to **D16**. → **No** GO to **D2**.
D2 CHECK CIRCUIT 1077 (DG/P) FOR AN OPEN	
1 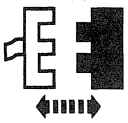 DDM Connector C455 2 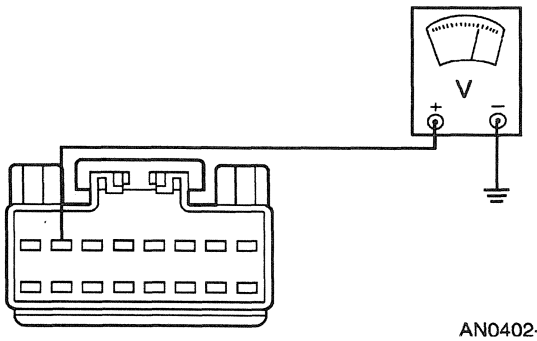 AN0402-B	2 Measure the voltage at the DDM connector Pin C455-2, Circuit 1077 (DG/P). • Is the voltage B+? → **Yes** REPAIR Circuit 1077 (DG/P) for an open between the driver door module connector C457 and splice. REPEAT the Data Link Diagnostic Test. → **No** GO to **D3**.

Official Licensed Product
Ford Motor Company

(Continued)

DIAGNOSIS AND TESTING (Continued)

PINPOINT TEST D: NO COMMUNICATION WITH DRIVER DOOR MODULE (Continued)

TEST CONDITIONS	TEST DETAILS/RESULTS/ACTIONS
D3 CHECK THE FUSE JUNCTION PANEL FUSE 41 (10A)	
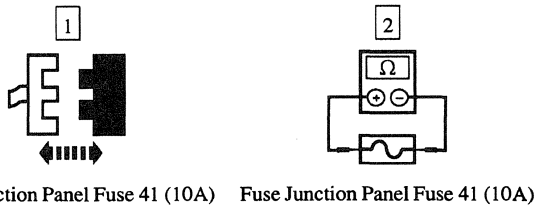 Fuse Junction Panel Fuse 41 (10A) Fuse Junction Panel Fuse 41 (10A)	• Is the Fuse 41 (10A) OK? → **Yes** REPAIR Circuit 1077 (DG/P) for an open. REPEAT the Data Link Diagnostic Test. → **No** GO to **D4**.
D4 CHECK FOR A SYSTEM SHORT	
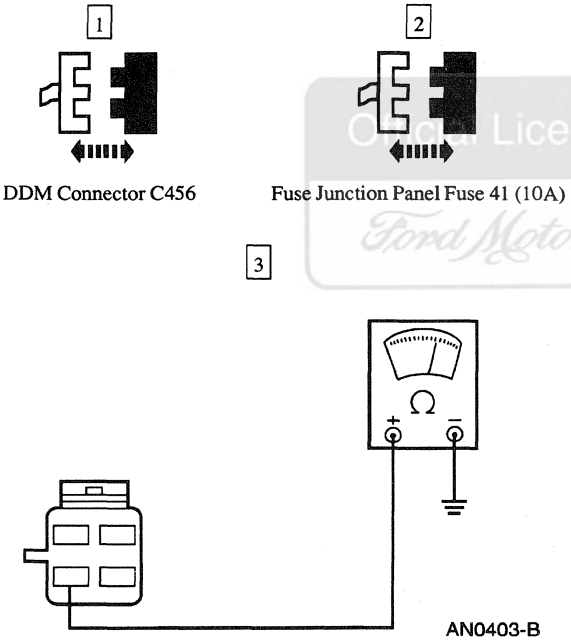 DDM Connector C456 Fuse Junction Panel Fuse 41 (10A)	3 Measure the resistance between the DDM connector Pin C457-3, Circuit 1077 (DG/P) and ground. • Is the resistance 10 K ohms or less? → **Yes** GO to **D5**. → **No** GO to **D10**.

Official Licensed Product Ford Motor Company

(Continued)

DIAGNOSIS AND TESTING (Continued)

PINPOINT TEST D: NO COMMUNICATION WITH DRIVER DOOR MODULE (Continued)

TEST CONDITIONS	TEST DETAILS/RESULTS/ACTIONS
D5 CHECK THE LH DOOR LOCK SWITCH FOR A SHORT TO GROUND	
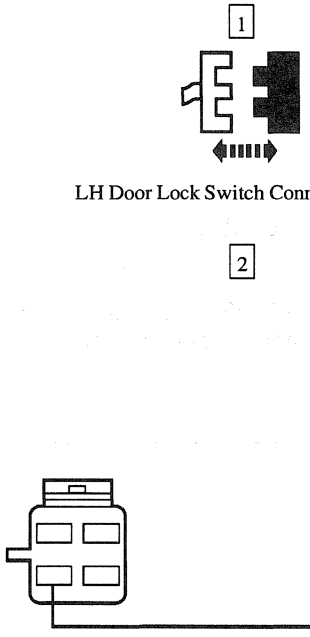 LH Door Lock Switch Connector C508	2 Measure the resistance between the DDM connector Pin C457-3, Circuit 1077 (DG/P) and ground. • Is the resistance 10 K ohms or less? → **Yes** GO to **D6**. → **No** REPLACE the LH door lock switch. REPEAT the Data Link Diagnostic Test.
D6 CHECK THE RH DOOR LOCK SWITCH FOR A SHORT TO GROUND	
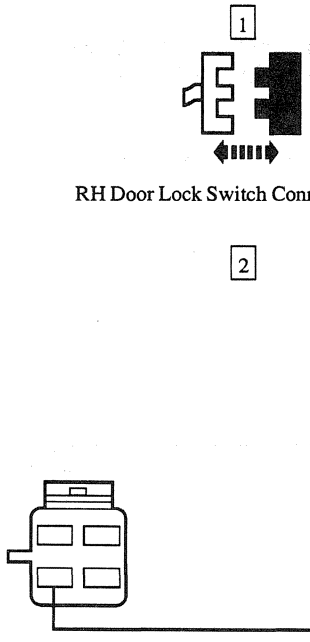 RH Door Lock Switch Connector C608	2 Measure the resistance between the DDM connector Pin C457-3, Circuit 1077 (DG/P) and ground. • Is the resistance 10 K ohms or less? → **Yes** GO to **D7**. → **No** REPLACE the RH door lock switch. REPEAT the Data Link Diagnostic Test.

Official Licensed Product
Ford Motor Company

(Continued)

DIAGNOSIS AND TESTING (Continued)

PINPOINT TEST D: NO COMMUNICATION WITH DRIVER DOOR MODULE (Continued)

TEST CONDITIONS	TEST DETAILS/RESULTS/ACTIONS
D7 CHECK THE KEYLESS ENTRY KEYPAD FOR A SHORT TO GROUND	
1 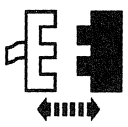 Keyless Entry Keypad Connector C510 2 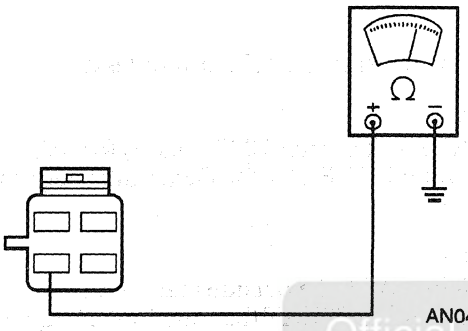 AN0403-B	2 Measure the resistance between the DDM connector Pin C457-3, Circuit 1077 (DG/P) and ground. • Is the resistance 10 K ohms or less? → **Yes** GO to **D8**. → **No** REPLACE the keyless entry keypad. REPEAT the Data Link Diagnostic Test.
D8 CHECK THE MEMORY OFF/RECALL SWITCH FOR A SHORT TO GROUND	
1 Memory Off/Recall Switch Connector C515 2 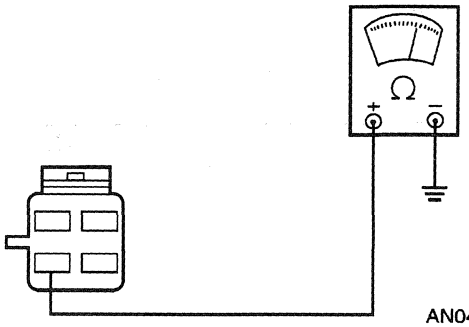 AN0403-B	2 Measure the resistance between the DDM connector Pin C457-3, Circuit 1077 (DG/P) and ground. • Is the resistance 10 K ohms or less? → **Yes** GO to **D9**. → **No** REPLACE the memory off/recall switch. REPEAT the Data Link Diagnostic test.

Official Licensed Product
Ford Motor Company

(Continued)

DIAGNOSIS AND TESTING (Continued)

PINPOINT TEST D: NO COMMUNICATION WITH DRIVER DOOR MODULE (Continued)

TEST CONDITIONS	TEST DETAILS/RESULTS/ACTIONS
D9 CHECK THE OUTSIDE REAR VIEW MIRROR CONTROL SWITCH FOR A SHORT TO GROUND	
1 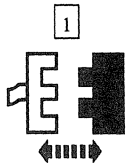 Outside Rear View Mirror Control Connector C500 2 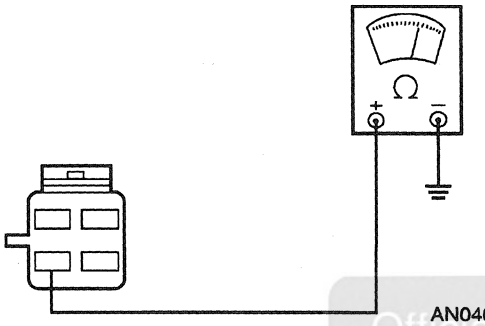 AN0403-B	2 Measure the resistance between the DDM connector Pin C457-3, Circuit 1077 (DG/P) and ground. • Is the resistance 10 K ohms or less? → **Yes** REPAIR Circuit 1077 (DG/P) for a short to ground. REPEAT the Data Link Diagnostic test. → **No** REPLACE the outside rear view mirror control. REPEAT the Data Link Diagnostic test.
D10 CHECK CIRCUIT 117 (PK/BK)	
1 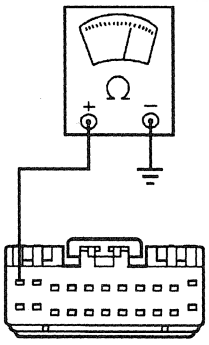 AK0943-B	1 Measure the resistance between the DDM connector Pin C456-1, Circuit 117 (PK/BK) and ground. • Is the resistance 10 K ohms or less? → **Yes** GO to **D11**. → **No** GO to **D13**.

Official Licensed Product
Ford Motor Company

(Continued)

DIAGNOSIS AND TESTING (Continued)

PINPOINT TEST D: NO COMMUNICATION WITH DRIVER DOOR MODULE (Continued)

TEST CONDITIONS	TEST DETAILS/RESULTS/ACTIONS
D11 CHECK THE DRIVER DOOR LOCK ACTUATOR	
1 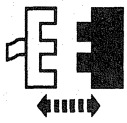 Driver Door Lock Actuator Connector C517 2 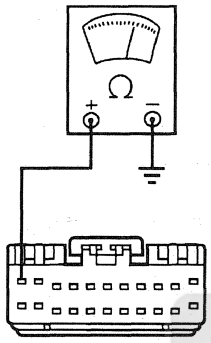 AK0943-B	2 Measure the resistance between the DDM connector Pin C456-1, Circuit 117 (PK/BK) and ground. • Is the resistance 10 K ohms or less? → **Yes** GO to **D12.** → **No** REPLACE the driver door lock actuator. REPEAT the Data Link Diagnostic test.
D12 CHECK THE PASSENGER DOOR LOCK ACTUATOR	
1 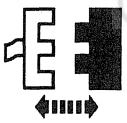 Passenger Door Lock Actuator Connector C610 2 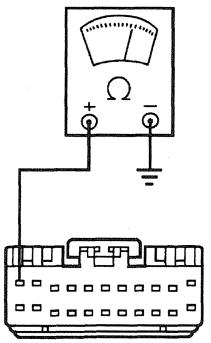 AK0943-B	2 Measure the resistance between the DDM connector Pin C456-1, Circuit 117 (PK/BK) and ground. • Is the resistance 10 K ohms or less? → **Yes** REPAIR Circuit 117 (PK/BK) for a short to ground. REPEAT the Data Link Diagnostic test. → **No** REPLACE the passenger door lock actuator. REPEAT the Data Link Diagnostic test.

Official Licensed Product Ford Motor Company

(Continued)

DIAGNOSIS AND TESTING (Continued)

PINPOINT TEST D: NO COMMUNICATION WITH DRIVER DOOR MODULE (Continued)

TEST CONDITIONS	TEST DETAILS/RESULTS/ACTIONS
D13 CHECK CIRCUIT 119 (PK/Y) AND CIRCUIT 120 (PK/LG) FOR A SHORT TO GROUND	
1 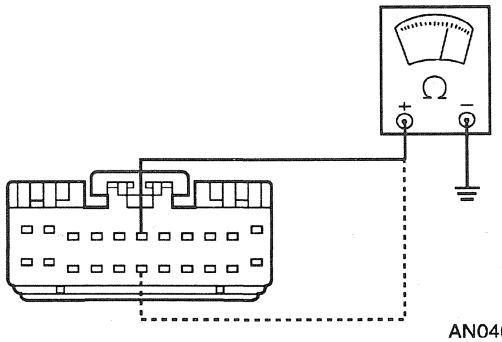 AN0404-B	1 Measure the resistance between ground and the DDM connector Pin C456-6, Circuit 119 (PK/Y), then Pin C456-17, Circuit 120 (PK/LG). • Is the resistance 10 K ohms or less on either Circuit? → **Yes** REPAIR Circuit 119 (PK/Y) or Circuit 120 (PK/LG) for a short to ground. REPEAT the Data Link Diagnostic test. → **No** GO to **D14**.
D14 CHECK FOR A SYSTEM SHORT	
1 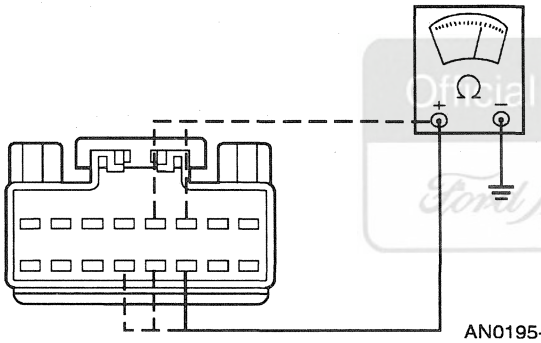 AN0195-A	1 Measure the resistance between ground and the following DDM connector Pins: — C455-14, Circuit 78 (LB/Y) — C455-6, Circuit 79 (LG/R) — C455-13, Circuit 121 (Y/BK) — C455-5, Circuit 122 (Y) — C455-12, Circuit 123 (R) • Is the resistance 10 K ohms or less on any circuit? → **Yes** REPAIR suspect circuit for a short to ground. REPEAT the Data Link Diagnostic test. → **No** GO to **D15**.

Official Licensed Ford Motor Company

(Continued)

DIAGNOSIS AND TESTING (Continued)

PINPOINT TEST D: NO COMMUNICATION WITH DRIVER DOOR MODULE (Continued)

TEST CONDITIONS	TEST DETAILS/RESULTS/ACTIONS
D15 CHECK FOR A SYSTEM SHORT TO GROUND	
1 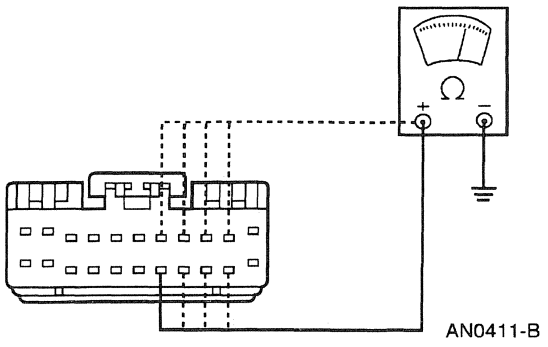 AN0411-B	1 Measure the resistance between ground and the following DDM connector Pins: — C456-18, Circuit 270 (BR/O) — C456-19, Circuit 267 (BR/LG) — C456-7, Circuit 268 (BK/O) — C456-20, Circuit 943 (P/O) — C456-21, Circuit 946 (P/LG) — C456-9, Circuit 942 (R/O) — C456-8, Circuit 944 (DG/O) — C456-10, Circuit 945 (Y/BK) • Is the resistance 10 K ohms or less on any circuit? → **Yes** REPAIR suspect circuit for a short to ground. REPEAT the Data Link Diagnostic test. → **No** REPLACE fuse junction panel Fuse 41 (10A). REPLACE the driver door module. REPEAT the Data Link Diagnostic test.
D16 CHECK THE POWER SUPPLY TO THE DRIVER DOOR MODULE CONNECTOR C455	
1 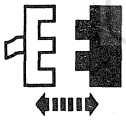 DDM Connector C455 2 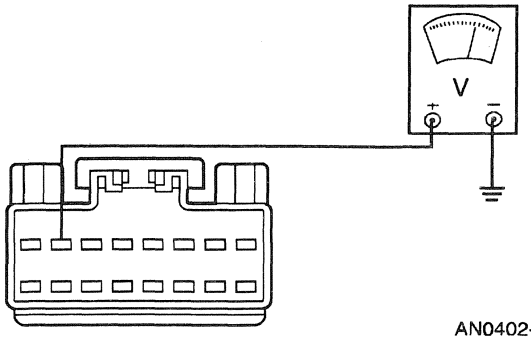 AN0402-B	2 Measure the voltage at the DDM connector Pin C455-2, Circuit 1077 (DG/P). • Is the voltage reading B+? → **Yes** GO to **D17**. → **No** REPAIR Circuit 1077 (DG/P) for an open between the driver door module connector C455 and splice. REPEAT the Data Link Diagnostic test.

(Continued)

Official Licensed Product Ford Motor Company

DIAGNOSIS AND TESTING (Continued)

PINPOINT TEST D: NO COMMUNICATION WITH DRIVER DOOR MODULE (Continued)

TEST CONDITIONS	TEST DETAILS/RESULTS/ACTIONS
D17 CHECK CIRCUIT 57 (BK) FOR AN OPEN	
1 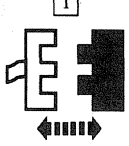 DDM Connector C456 2 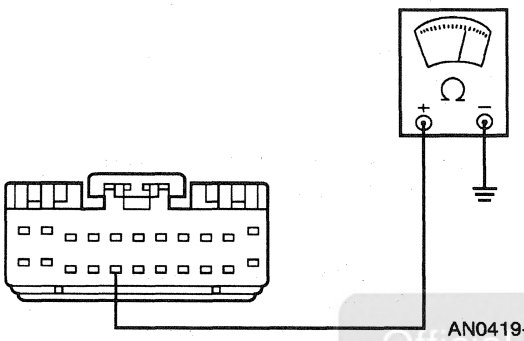 AN0419-B	2 Measure the resistance between the DDM connector Pin C456-16, Circuit 57 (BK) and ground. • Is the resistance 5 ohms or less? → **Yes** GO to **D18**. → **No** REPAIR Circuit 57 (BK) for an open. REPEAT the Data Link Diagnostic test.
D18 CHECK CIRCUIT 875 (BK/LB) FOR AN OPEN	
1 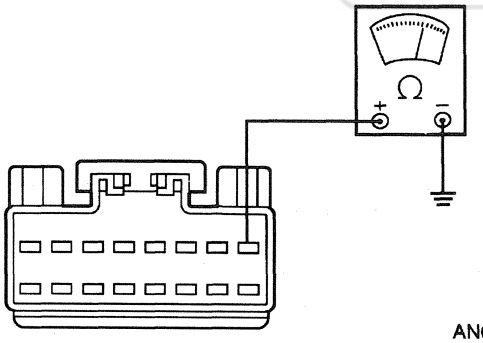 AN0420-B	1 Measure the resistance between the DDM connector Pin C455-8, Circuit 875 (BK/LB) and ground. • Is the resistance 5 ohms or less? → **Yes** GO to Section 418-00, Communication System Diagnostics, to diagnose the network concern. → **No** REPAIR Circuit 875 (BK/LB) for an open. REPEAT the Data Link Diagnostic test.

Official Licensed Product
Ford Motor Company

DIAGNOSIS AND TESTING (Continued)

PINPOINT TEST E: NO COMMUNICATION TO DRIVER SEAT MODULE

TEST CONDITIONS	TEST DETAILS/RESULTS/ACTIONS
E1 CHECK POWER SUPPLY TO DRIVER SEAT MODULE	
1 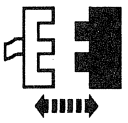 DSM Connector C362 2 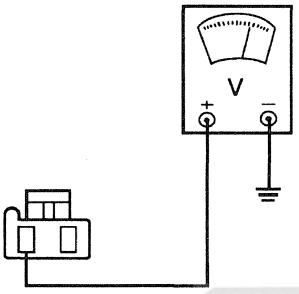 AN0425-A	2 Measure the voltage at the DSM connector Pin C362-1, Circuit 490 (R). • Is the voltage reading B+? → **Yes** GO to **E7**. → **No** GO to **E2**.
E2 CHECK THE POWER DISTRIBUTION BOX FUSE 19 (30A)	
1 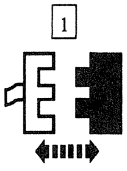 Power Distribution Box Fuse 19 (30A) 2 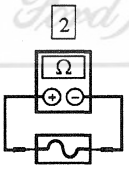 Power Distribution Box Fuse 19 (30A)	• Is the Power Distribution Box Fuse 19 (30A) OK? → **Yes** REPAIR Circuit 490 (R) for an open. REPEAT the Data Link Diagnostic test. → **No** GO to **E3**.

Official Licensed Product
Ford Motor Company

(Continued)

DIAGNOSIS AND TESTING (Continued)

PINPOINT TEST E: NO COMMUNICATION TO DRIVER SEAT MODULE (Continued)

TEST CONDITIONS	TEST DETAILS/RESULTS/ACTIONS
E3 CHECK FOR A SYSTEM SHORT TO GROUND	
1 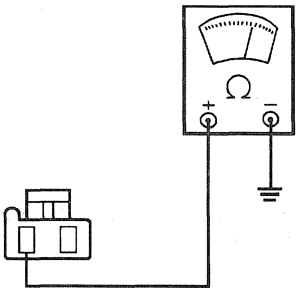 AN0421-A	1 Measure the resistance between the DSM connector Pin C362-1, Circuit 490 (R) and ground. • Is the resistance 10 K ohms or less? → **Yes** GO to **E4**. → **No** GO to **E5**.
E4 CHECK CIRCUIT 490 (R) FOR A SHORT TO GROUND	
1 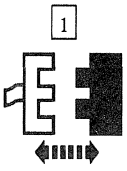 Driver Power Lumbar Switch Connector C345 2 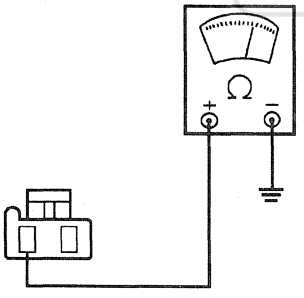 AN0421-A	2 Measure the resistance between the DSM connector Pin C362-1, Circuit 490 (R) and ground. • Is the resistance 10 K ohms or less? → **Yes** REPAIR Circuit 490 (R) for a short to ground. REPEAT the Data Link Diagnostic test. → **No** REPLACE the driver power lumbar switch. REPEAT the Data Link Diagnostic test.

Official Licensed Product
Ford Motor Company

(Continued)

DIAGNOSIS AND TESTING (Continued)

PINPOINT TEST E: NO COMMUNICATION TO DRIVER SEAT MODULE (Continued)

TEST CONDITIONS	TEST DETAILS/RESULTS/ACTIONS
E5 CHECK CIRCUIT 899 (R/W) FOR A SHORT TO GROUND	
1 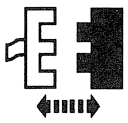 Driver Power Lumbar Switch Connector C345 2 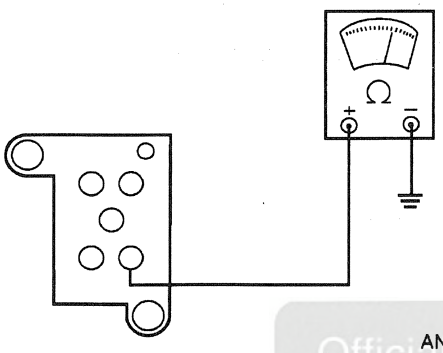 AN0422-B	2 Measure the resistance between the driver power lumbar switch connector Pin C345-5, Circuit 899 (R/W) and ground. • Is the resistance 10 K ohms or less? → **Yes** REPAIR Circuit 899 (R/W) for a short to ground. REPEAT the Data Link Diagnostic test. → **No** GO to **E6**.
E6 CHECK CIRCUIT 116 (R/BK) FOR A SHORT TO GROUND	
1 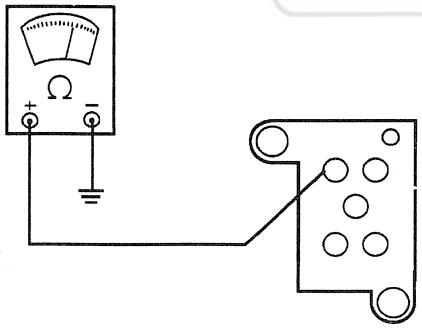 AN0423-B	1 Measure the resistance between the driver power lumbar switch connector Pin C345-1, Circuit 116 (R/BK) and ground. • Is the resistance 10 K ohms or less? → **Yes** REPAIR Circuit 116 (R/BK) for a short to ground. REPEAT the Data Link Diagnostic test. → **No** REPLACE the driver seat module. REPEAT the Data Link Diagnostic test.

Official Licensed Product
Ford Motor Company

(Continued)

DIAGNOSIS AND TESTING (Continued)

PINPOINT TEST E: NO COMMUNICATION TO DRIVER SEAT MODULE (Continued)

TEST CONDITIONS	TEST DETAILS/RESULTS/ACTIONS
E7 CHECK CIRCUIT 1048 (LB/W) FOR B+	
1 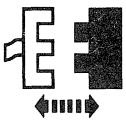 DSM Connector C311 2 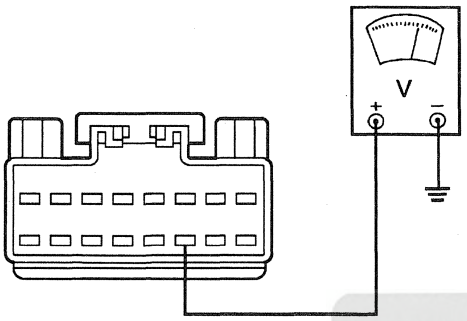 AN0424-B	2 Measure the voltage at the DSM connector Pin C311-14, Circuit 1048 (LB/W). • Is the voltage reading B+? → **Yes** GO to **E11**. → **No** GO to **E8**.
E8 CHECK THE FUSE JUNCTION PANEL FUSE 35 (10A)	
1 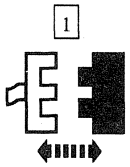 Fuse Junction Panel Fuse 35 (10A) 2 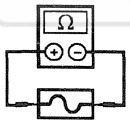 Fuse Junction Panel Fuse 35 (10A)	• Is the Fuse 35 (10A) OK? → **Yes** REPAIR Circuit 1048 (LB/W) for an open. REPEAT the Data Link Diagnostic test. → **No** GO to **E9**.

Official Licensed Product
Ford Motor Company

(Continued)

DIAGNOSIS AND TESTING (Continued)

PINPOINT TEST E: NO COMMUNICATION TO DRIVER SEAT MODULE (Continued)

TEST CONDITIONS	TEST DETAILS/RESULTS/ACTIONS
E9 CHECK CIRCUIT 1048 (LB/W) FOR AN OPEN	
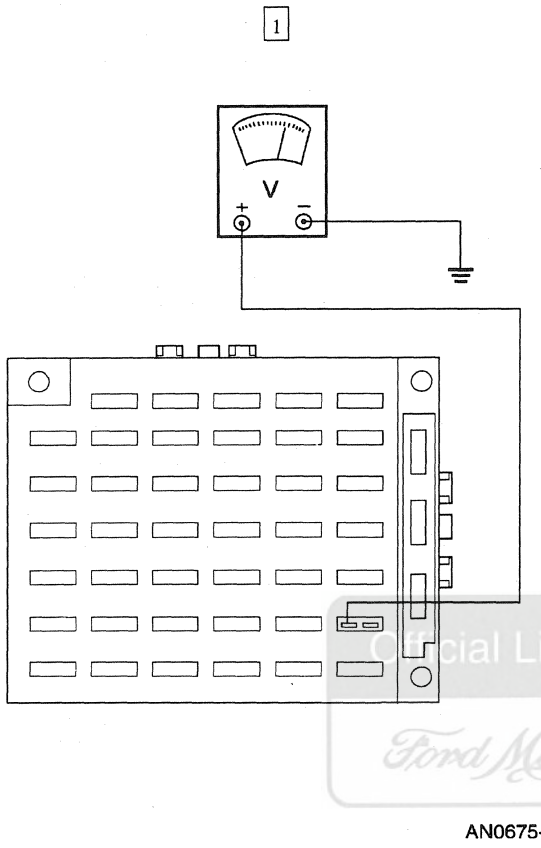 AN0675-A	1 Measure the voltage at the input cavity of the fuse junction panel Fuse 35. • Is the voltage reading B+? → **Yes** GO to **E10**. → **No** REPAIR Circuit 490 (R) for an open. REPEAT the Data Link Diagnostic test.
E10 CHECK CIRCUIT 1048 (LB/W) FOR A SHORT TO GROUND	
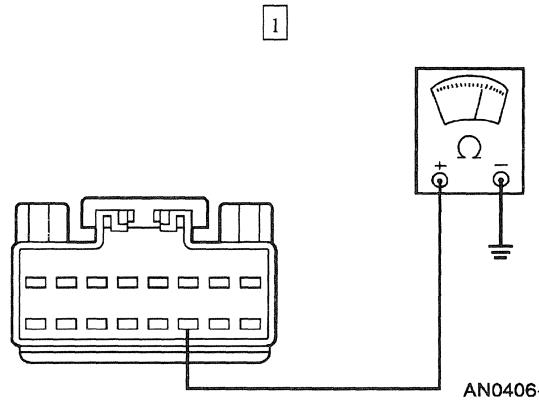 AN0406-B	1 Measure the resistance between the DSM connector Pin C311-14, Circuit 1048 (LB/W) and ground. • Is the resistance 10 K ohms or less? → **Yes** REPAIR Circuit 1048 (LB/W) for a short to ground. REPEAT the Data Link Diagnostic test. → **No** REPLACE the driver seat module. REPEAT the Data Link Diagnostic test.

Official Licensed Product
Ford Motor Company

(Continued)

DIAGNOSIS AND TESTING (Continued)

PINPOINT TEST E: NO COMMUNICATION TO DRIVER SEAT MODULE (Continued)

TEST CONDITIONS	TEST DETAILS/RESULTS/ACTIONS
E11 CHECK CIRCUIT 57 (BK) FOR AN OPEN	
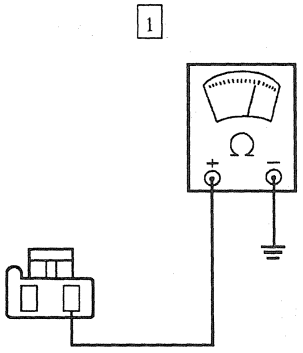 AN0430-A	1 Measure the resistance between the DSM connector Pin C362-2, Circuit 57 (BK) and ground. • Is the resistance 5 ohms or less? → **Yes** GO to **E12**. → **No** REPAIR Circuit 57 (BK) for an open. REPEAT the Data Link Diagnostic test.
E12 CHECK CIRCUIT 875 (BK/LB) FOR AN OPEN	
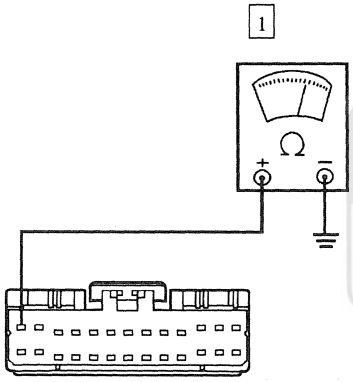 AN0431-B	1 Measure the resistance between the DSM connector Pin C311-1, Circuit 875 (BK/LB) and ground. • Is the resistance 5 ohms or less? → **Yes** GO to Section 418-00, Communication System Diagnostics, to diagnose the network concern. → **No** REPAIR Circuit 875 (BK/LB) for an open. REPEAT the Data Link Diagnostic test.

Official Licensed Product
Ford Motor Company

DIAGNOSIS AND TESTING (Continued)

PINPOINT TEST F: THE MIRRORS ARE INOPERATIVE

TEST CONDITIONS	TEST DETAILS/RESULTS/ACTIONS
F1 CHECK DTCS	
1 2 DSM Self-Test	• Is DTC U1180, U1181 or U1194 retrieved? → **Yes** REFER to the Driver Seat Module (DSM) Diagnostic Trouble Code (DTC) Index to service the DTCs. → **No** GO to **F2**.
F2 CHECK THE OUTSIDE REAR VIEW MIRROR CONTROL OUTPUT	
1 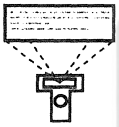 Select DDM PID MIR__SEL	2 Move the outside rear view mirror control switch to the RIGHT position. 3 Press the outside rear view mirror control switch to the DOWN position. • Does the PID MIR__SEL read PASSENGER? → **Yes** GO to **F8**. → **No** GO to **F3**.

Official Licensed Product
Ford Motor Company

(Continued)

DIAGNOSIS AND TESTING (Continued)

PINPOINT TEST F: THE MIRRORS ARE INOPERATIVE (Continued)

TEST CONDITIONS	TEST DETAILS/RESULTS/ACTIONS
F3 CHECK CIRCUIT 1077 (DG/P) FOR AN OPEN	
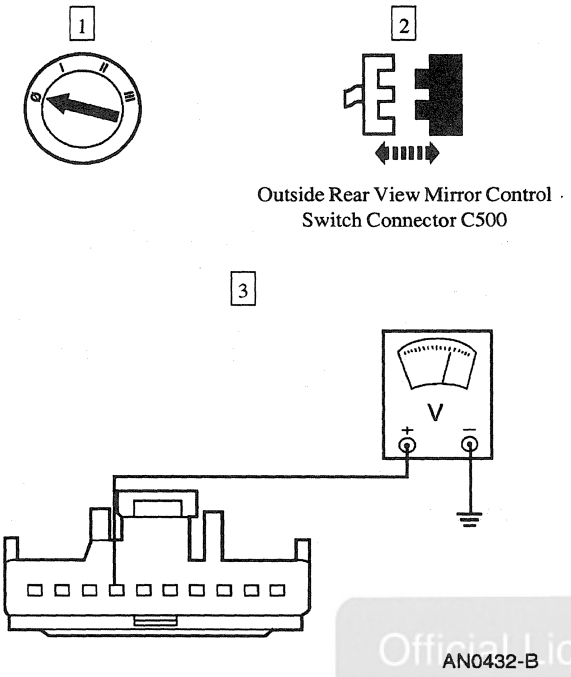	3 Measure the voltage at the outside rear view mirror control switch connector Pin C500-7, Circuit 1077 (DG/P). • Is the voltage reading B+? → **Yes** GO to **F4**. → **No** REPAIR Circuit 1077 (DG/P) for an open. TEST the system for normal operation.
F4 CHECK CIRCUIT 875 (BK/LB) FOR AN OPEN	
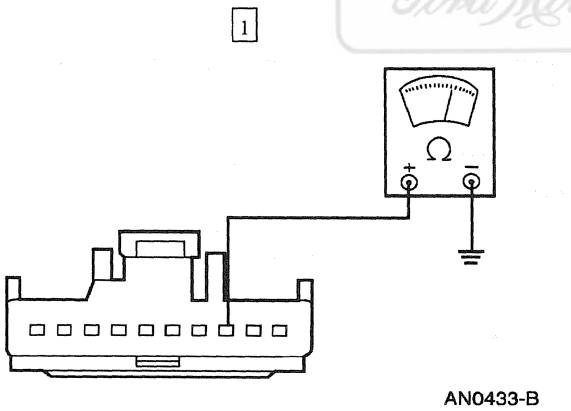	1 Measure the resistance between the outside rear view mirror control switch connector Pin C500-3, Circuit 875 (BK/LB) and ground. • Is the resistance 5 ohms or less? → **Yes** GO to **F5**. → **No** REPAIR Circuit 875 (BK/LB) for an open. TEST the system for normal operation.

Official Licensed Product
Ford Motor Company

(Continued)

DIAGNOSIS AND TESTING (Continued)

PINPOINT TEST F: THE MIRRORS ARE INOPERATIVE (Continued)

TEST CONDITIONS	TEST DETAILS/RESULTS/ACTIONS
F5 CHECK CIRCUIT 945 (Y/BK) FOR A SHORT TO GROUND	
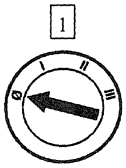 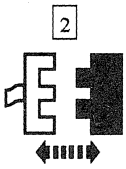 DDM Connector C456 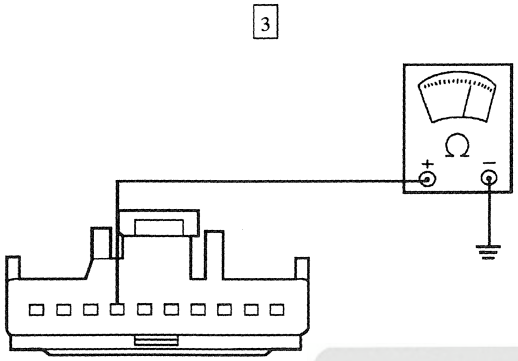 AN0434-B	3 Measure the resistance between the outside rear view mirror control switch connector Pin C500-4, Circuit 945 (Y/BK) and ground. • Is the resistance 10 K ohms or less? → **Yes** REPAIR Circuit 945 (Y/BK) for a short to ground. TEST the system for normal operation. → **No** GO to **F6**.
F6 CHECK CIRCUIT 945 (Y/BK) FOR AN OPEN	
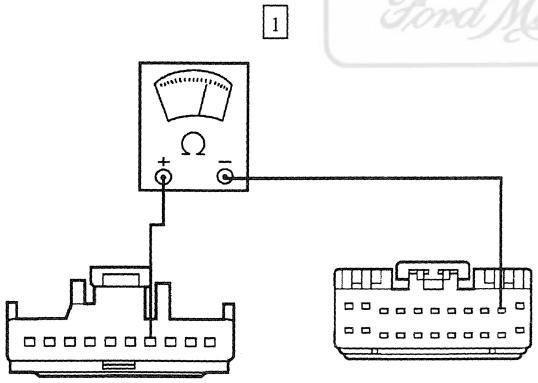 AN0435-B	1 Measure the resistance of Circuit 945 (Y/B) between the DDM connector Pin C456-10 and the outside rear view mirror control switch connector Pin C500-4. • Is the resistance 5 ohms or less? → **Yes** GO to **F7**. → **No** REPAIR Circuit 945 (Y/BK) for an open. TEST the system for normal operation.
F7 CHECK THE OUTSIDE REAR VIEW MIRROR CONTROL	
 Outside Rear View Mirror Control Connector C500	2 Move the outside rear view mirror control to the PASSENGER position.

Official Licensed Product
Ford Motor Company

(Continued)

DIAGNOSIS AND TESTING (Continued)

PINPOINT TEST F: THE MIRRORS ARE INOPERATIVE (Continued)

TEST CONDITIONS	TEST DETAILS/RESULTS/ACTIONS
F7 CHECK THE OUTSIDE REAR VIEW MIRROR CONTROL (Continued)	
3 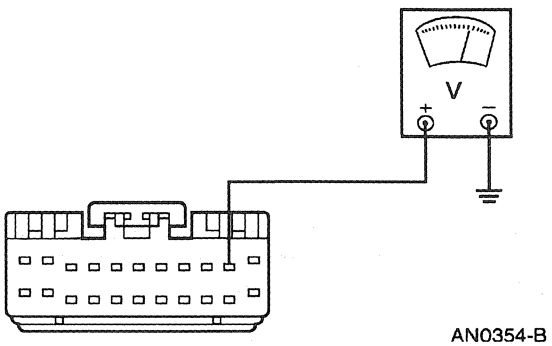 AN0354-B	3 Measure the voltage at the DDM connector Pin C456-10, Circuit 945 (Y/BK). 4 Press the outside rear view mirror control switch to the DOWN position. • Is the voltage reading B+? → **Yes** REPLACE the driver door module. TEST the system for normal operation. → **No** REPLACE the outside rear view mirror control. TEST the system for normal operation.
F8 CHECK THE OUTSIDE REAR VIEW MIRROR OPERATION	
1 Select DSM ACTIVE COMMAND - POWER MIRROR CONTROL 2 Trigger DR UP On	• Does the LH outside rear view mirror adjust UP? → **Yes** The system is operating properly. CHECK the individual mirror adjustment operation. REFER to the Symptom Chart to repair any inoperative adjustments. → **No** REPLACE the driver seat module. TEST the system for normal operation.

Official Licensed Ford Motor Company

DIAGNOSIS AND TESTING (Continued)

PINPOINT TEST G: A SINGLE MIRROR IS INOPERATIVE RH OUTSIDE REAR VIEW MIRROR INOPERATIVE

TEST CONDITIONS	TEST DETAILS/RESULTS/ACTIONS
G1 CHECK THE PID MIR__SEL	
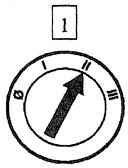 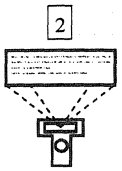 Select DDM PID MIR__SEL	3 Move the outside rear view mirror control switch to the suspect LH or RH mirror position. 4 Press the outside rear view mirror control switch to the UP adjustment position. • Does the PID MIR__SEL read DRIVER for LH mirror or PSSNGR for RH mirror? → **Yes** GO to **G3**. → **No** GO to **G2**.
G2 CHECK THE OUTSIDE REAR VIEW MIRROR CONTROL SWITCH	
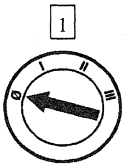 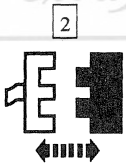 DDM Connector C456 3 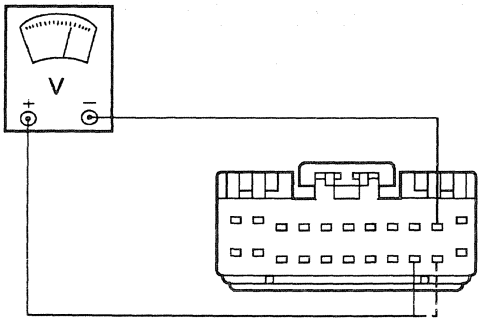 AN0436-C	3 Measure the voltage between the DDM connector Pin C456-10, Circuit 945 (Y/BK) and Pin C456-20, Circuit 943 (P/O) for RH or Pin C456-21, Circuit 940 (DB/O) for LH. 4 Move the outside rear view mirror control switch to the suspect RH or LH mirror position.

(Continued)

Official Licensed Product Ford Motor Company

DIAGNOSIS AND TESTING (Continued)

PINPOINT TEST G: A SINGLE MIRROR IS INOPERATIVE RH OUTSIDE REAR VIEW MIRROR INOPERATIVE (Continued)

TEST CONDITIONS	TEST DETAILS/RESULTS/ACTIONS
G2 CHECK THE OUTSIDE REAR VIEW MIRROR CONTROL SWITCH (Continued)	
	5 Press the outside rear view mirror control switch to the UP adjustment position. • Is the voltage reading B+? → **Yes** REPLACE the driver door module. TEST the system for normal operation. → **No** REPLACE the outside rear view mirror control. TEST the system for normal operation.
G3 CHECK FOR DTCS	
1 DDM Connector C456 2 3 DSM Self-Test	• Is the DTC U1180, U1181 or U1194 retrieved? → **Yes** REFER to the Driver Seat Module (DSM) Diagnostic Trouble Code (DTC) Index to service the DTCs. → **No** REPLACE the driver seat module. TEST the system for normal operation.

Official Licensed Product
Ford Motor Company

PINPOINT TEST H: A SINGLE MIRROR IS INOPERATIVE—VERTICALLY

TEST CONDITIONS	TEST DETAILS/RESULTS/ACTIONS
H1 CHECK THE PID MIRV__SW	
1 2 DDM PID MIRV__SW	3 Switch the outside rear view mirror control to the inoperative LH or RH mirror.

(Continued)

DIAGNOSIS AND TESTING (Continued)

PINPOINT TEST H: A SINGLE MIRROR IS INOPERATIVE—VERTICALLY (Continued)

TEST CONDITIONS	TEST DETAILS/RESULTS/ACTIONS
H1 CHECK THE PID MIRV__SW (Continued)	
	4 Press the outside rear view mirror control switch to the UP position, then to the DOWN position while monitoring the PID MIRV__SW. • Does the PID MIRV__SW read UP and DOWN when the outside rear view mirror control is pressed UP and DOWN? → **Yes** GO to **H8**. → **No** GO to **H2**.
H2 CHECK FOR THE OUTSIDE REAR VIEW MIRROR CONTROL OUTPUT	
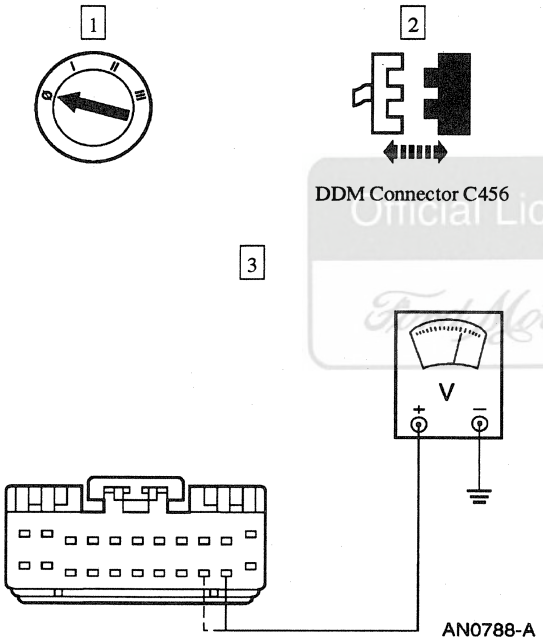	3 Measure the voltage at the DDM connector Pin C456-21, Circuit 940 (DB/O) for LH or Pin C456-20, Circuit 943 (P/O) for RH. 4 Press the outside rear view mirror control to the UP position. • Is the voltage reading B+? → **Yes** GO to **H7**. → **No** GO to **H3**.

Official Licensed Product
Ford Motor Company

(Continued)

DIAGNOSIS AND TESTING (Continued)

PINPOINT TEST H: A SINGLE MIRROR IS INOPERATIVE—VERTICALLY (Continued)

TEST CONDITIONS	TEST DETAILS/RESULTS/ACTIONS
H3 CHECK CIRCUIT 940 (DB/O) FOR A SHORT TO GROUND	
1 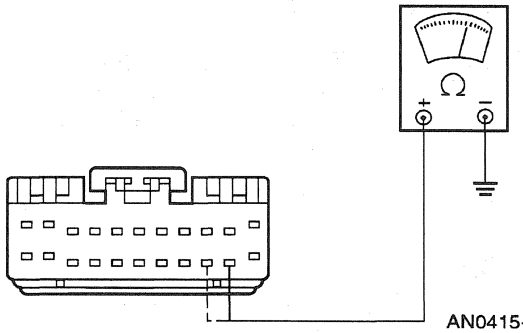 AN0415-C	1 Measure the resistance between the DDM connector Pin C456-21, Circuit 940 (DB/O) LH or Pin C456-20, Circuit 943 (P/O) RH and ground. • Is the resistance 10 K ohms or less? → **Yes** GO to **H4**. → **No** GO to **H5** for LH or GO to **H6** for RH.
H4 CHECK THE OUTSIDE REAR VIEW MIRROR CONTROL FOR A SHORT TO GROUND	
1 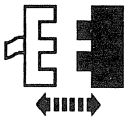 Outside Rear View Mirror Control Connector C500 2 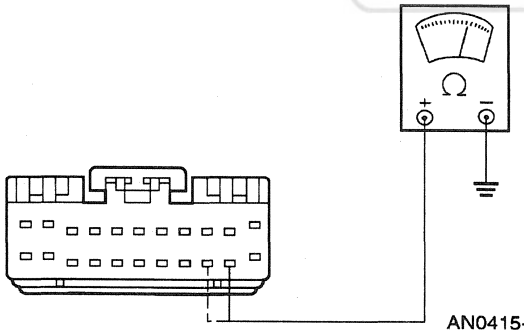 AN0415-C	2 Measure the resistance between the DDM connector Pin C456-21, Circuit 940 (DB/O) for LH or Pin C456-20, Circuit 943 (P/O) for RH and ground. • Is the resistance 10 K ohms or less? → **Yes** REPAIR Circuit 940 (DB/O) or Circuit 943 (P/O) for a short to ground. TEST the system for normal operation. → **No** REPLACE the outside rear view mirror control. TEST the system for normal operation.

Official Licensed Product
Ford Motor Company

(Continued)

DIAGNOSIS AND TESTING (Continued)

PINPOINT TEST H: A SINGLE MIRROR IS INOPERATIVE—VERTICALLY (Continued)

TEST CONDITIONS	TEST DETAILS/RESULTS/ACTIONS
H5 CHECK CIRCUIT 940 (DB/O) FOR AN OPEN	
1 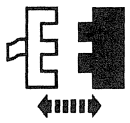 Outside Rear View Mirror Control Connector C500 2 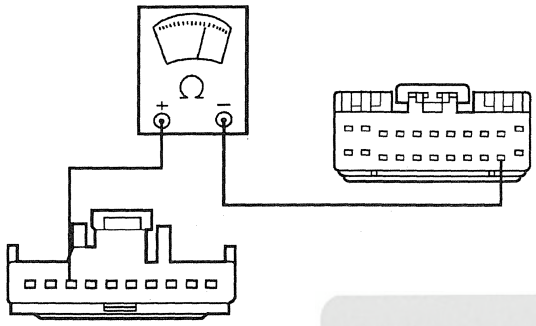 AN0438-B	2 Measure the resistance of Circuit 940 (DB/O) between the DDM connector Pin C456-21 and the outside rear view mirror control switch connector Pin C500-8. • Is the resistance 5 ohms or less? → **Yes** REPLACE the outside rear view mirror control. TEST the system for normal operation. → **No** REPAIR Circuit 940 (DB/O) for an open. TEST the system for normal operation.
H6 CHECK CIRCUIT 943 (P/O) FOR AN OPEN	
1 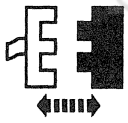 Outside Rear View Mirror Control Switch Connector C500 2 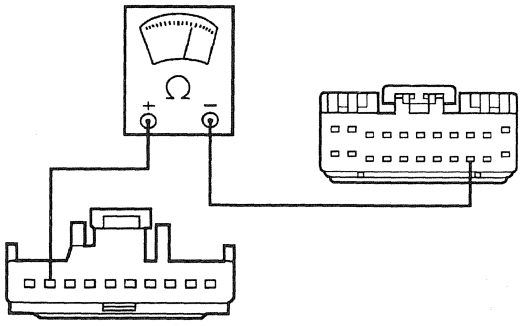 AN0440-B	2 Measure the resistance of Circuit 943 (P/O) between the DDM connector Pin C456-20 and the outside rear view mirror control switch connector Pin C500-9. • Is the resistance 5 ohms or less? → **Yes** REPLACE the outside rear view mirror control. TEST the system for normal operation. → **No** REPAIR Circuit 943 (P/O) for an open. TEST the system for normal operation.

(Continued)

Official Licensed Product Ford Motor Company

DIAGNOSIS AND TESTING (Continued)

PINPOINT TEST H: A SINGLE MIRROR IS INOPERATIVE—VERTICALLY (Continued)

TEST CONDITIONS	TEST DETAILS/RESULTS/ACTIONS
H7 CHECK THE OUTSIDE REAR VIEW MIRROR CONTROL LOGIC	
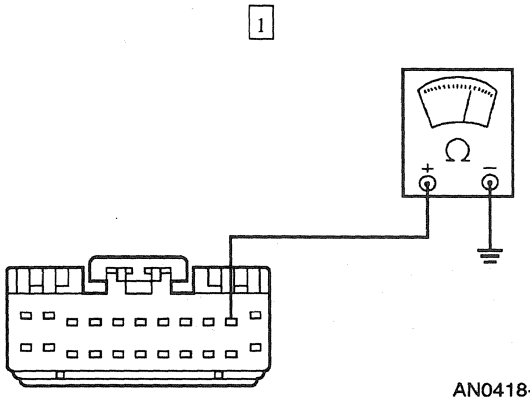	1 Measure the resistance between the DDM connector Pin C456-10, Circuit 945 (Y/BK) and ground. 2 Switch the outside rear view mirror control to the inoperative LH or RH mirror. 3 Press the outside rear view mirror control to the UP position. • Is the resistance 5 ohms or less? → **Yes** REPLACE the driver door module. TEST the system for normal operation. → **No** REPLACE the outside rear view mirror control. TEST the system for normal operation.
H8 CHECK FOR DTCS	
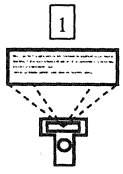 DSM Self-Test	• Is the DTC U1180, U1181 and U1194 retrieved? → **Yes** REFER to the Driver Seat Module (DSM) Diagnostic Trouble Code (DTC) Index to service the DTC. → **No** REPLACE the driver seat module. TEST the system for normal operation.

Official Licensed Product
Ford Motor Company

DIAGNOSIS AND TESTING (Continued)

PINPOINT TEST J: A SINGLE MIRROR IS INOPERATIVE—HORIZONTALLY

TEST CONDITIONS	TEST DETAILS/RESULTS/ACTIONS
J1 CHECK THE PID MIRH__SW	
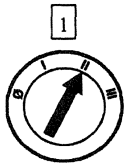 DDM PID MIRH__SW	3 Switch the outside rear view mirror control to the inoperative LH or RH mirror. 4 Press the outside rear view mirror control to the LEFT position, then to the RIGHT position while monitoring the PID MIRH__SW. • Does the PID MIRH__SW read LEFT and RIGHT when the outside rear view mirror control is pressed LEFT and RIGHT? → **Yes** GO to **J8**. → **No** GO to **J2**.
J2 CHECK FOR THE OUTSIDE REAR VIEW MIRROR CONTROL OUTPUT	
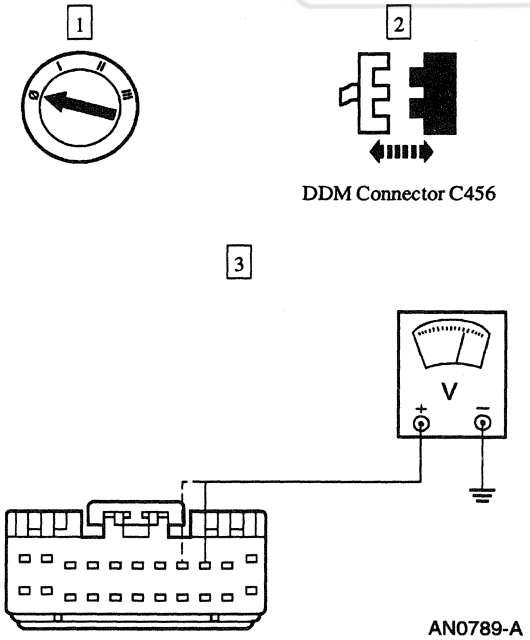 DDM Connector C456	3 Measure the voltage at the DDM connector Pin C456-9, Circuit 942 (R/O) for LH or Pin C456-8, Circuit 944 (DG/O) for RH.

(Continued)

Official Licensed Product

DIAGNOSIS AND TESTING (Continued)

PINPOINT TEST J: A SINGLE MIRROR IS INOPERATIVE—HORIZONTALLY (Continued)

TEST CONDITIONS	TEST DETAILS/RESULTS/ACTIONS
J2 CHECK FOR THE OUTSIDE REAR VIEW MIRROR CONTROL OUTPUT (Continued)	
	4 Press the outside rear view mirror control switch to the LEFT position. • Is the voltage reading B+? → **Yes** GO to **J7**. → **No** GO to **J3**.
J3 CHECK CIRCUIT 942 (R/O) OR CIRCUIT 944 (DG/O) FOR A SHORT TO GROUND	
1 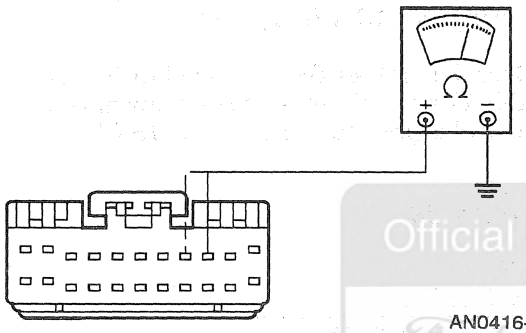 AN0416-C	1 Measure the resistance between the DDM connector Pin C456-9, Circuit 942 (R/O) for LH or Pin C456-8, Circuit 944 (DG/O) for RH and ground. • Is the resistance 10 K ohms or less? → **Yes** GO to **J4**. → **No** GO to **J5** for LH or GO to **J6** for RH.
J4 CHECK THE OUTSIDE REAR VIEW MIRROR CONTROL FOR A SHORT TO GROUND	
1 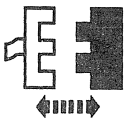 Outside Rear View Mirror Control Switch Connector C500 2 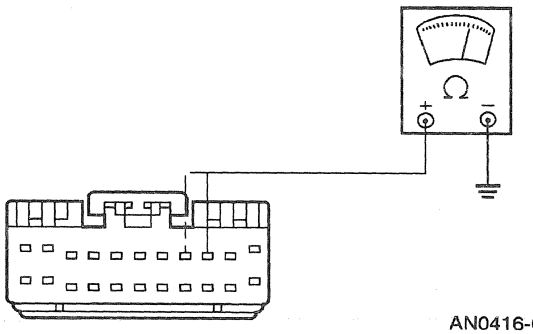 AN0416-C	2 Measure the resistance between the DDM connector Pin C456-9, Circuit 942 (R/O) for LH or Pin C456-8, Circuit 944 (DG/O) for RH and ground. • Is the resistance 10 K ohms or less? → **Yes** REPAIR Circuit 942 (R/O) or Circuit 944 (DG/O) for a short to ground. TEST the system for normal operation. → **No** REPLACE the outside rear view mirror control. TEST the system for normal operation.

Official Licensed Product
Ford Motor Company

(Continued)

DIAGNOSIS AND TESTING (Continued)

PINPOINT TEST J: A SINGLE MIRROR IS INOPERATIVE—HORIZONTALLY (Continued)

TEST CONDITIONS	TEST DETAILS/RESULTS/ACTIONS
J5 CHECK CIRCUIT 942 (R/O) FOR AN OPEN	
1 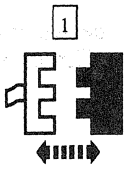 Outside Rear View Mirror Control Switch Connector C500 2 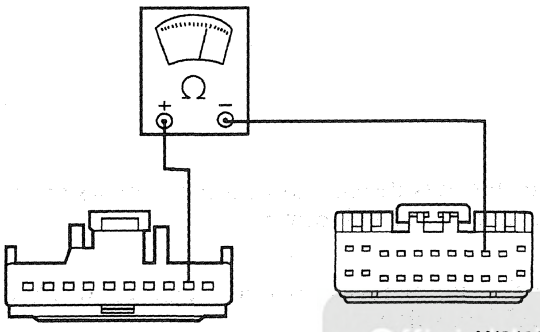 AN0439-B	2 Measure the resistance of Circuit 942 (R/O) between the DDM connector Pin C456-9 and the outside rear view mirror control switch connector Pin C500-2. • Is the resistance 5 ohms or less? → **Yes** REPLACE the outside rear view mirror control. TEST the system for normal operation. → **No** REPAIR Circuit 942 (R/O) for an open. TEST the system for normal operation.
J6 CHECK CIRCUIT 944 (DG/O) FOR AN OPEN	
1 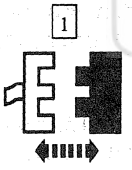 Outside Rear View Mirror Control Switch Connector C500 2 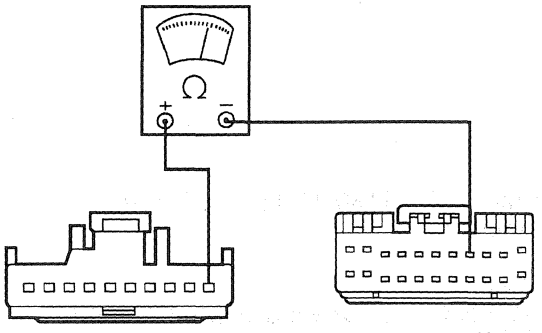 AN0441-B	2 Measure the resistance of Circuit 944 (DG/O) between the DDM connector Pin C456-8 and the outside rear view mirror control switch connector Pin C500-1. • Is the resistance 5 ohms or less? → **Yes** REPLACE the outside rear view mirror control. TEST the system for normal operation. → **No** REPAIR Circuit 944 (DG/O) for an open. TEST the system for normal operation.

(Continued)

Official Licensed Product Ford Motor Company

DIAGNOSIS AND TESTING (Continued)

PINPOINT TEST J: A SINGLE MIRROR IS INOPERATIVE—HORIZONTALLY (Continued)

TEST CONDITIONS	TEST DETAILS/RESULTS/ACTIONS
J7 CHECK THE OUTSIDE REAR VIEW MIRROR CONTROL LOGIC	
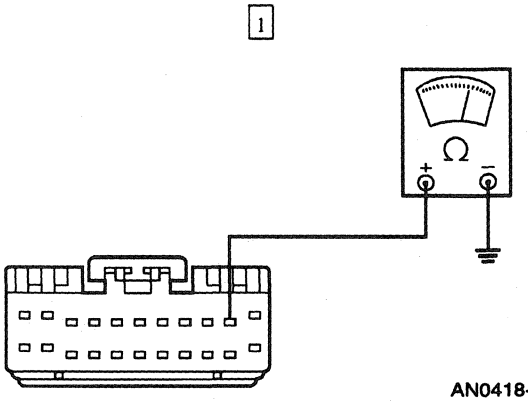 AN0418-B	1 Measure the resistance between the DDM connector Pin C456-10, Circuit 945 (Y/BK) and ground. 2 Switch the outside rear view mirror control switch to the inoperative LH mirror. 3 Press the outside rear view mirror control switch to the LEFT position. • Is the resistance 5 ohms or less? → **Yes** REPLACE the driver door module. TEST the system for normal operation. → **No** REPLACE the outside rear view mirror control. TEST the system for normal operation.
J8 CHECK FOR DTCS	
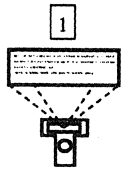 DSM Self-Test	• Is the DTC U1180, U1181 and U1194 retrieved? → **Yes** REFER to the Driver Seat Module (DSM) Diagnostic Trouble Code (DTC) Index to service the DTC. → **No** REPLACE the driver seat module. TEST the system for normal operation.

Official Licensed Product
Ford Motor Company

DIAGNOSIS AND TESTING (Continued)

PINPOINT TEST K: THE AUTO DIMMING MIRROR DOES NOT OPERATE PROPERLY

TEST CONDITIONS	TEST DETAILS/RESULTS/ACTIONS
K1 CHECK IF EQUIPPED WITH LH OUTSIDE REAR VIEW MIRROR DIMMING	
	1 Determine if vehicle is equipped with LH outside rear view mirror dimming. • Is vehicle equipped with LH outside rear view mirror dimming? → **Yes** GO to **K7**. → **No** GO to **K2**.
K2 CHECK THE POWER SUPPLY INSIDE REAR VIEW MIRROR	
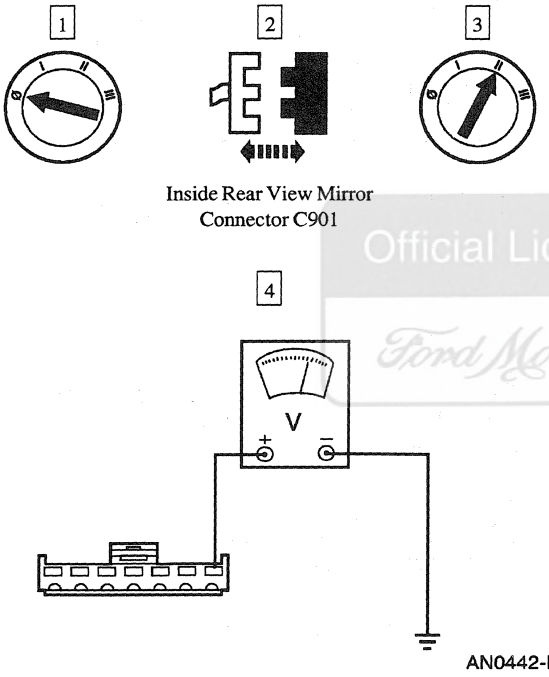	4 Measure the voltage at the inside rear view mirror connector Pin C901-7, Circuit 1002 (BK/PK). • Is the voltage reading B+? → **Yes** GO to **K5**. → **No** GO to **K3**.

Official Licensed Product
Ford Motor Company

(Continued)

DIAGNOSIS AND TESTING (Continued)

PINPOINT TEST K: THE AUTO DIMMING MIRROR DOES NOT OPERATE PROPERLY (Continued)

TEST CONDITIONS	TEST DETAILS/RESULTS/ACTIONS
K3 CHECK THE FUSE JUNCTION PANEL FUSE 4 (10A)	
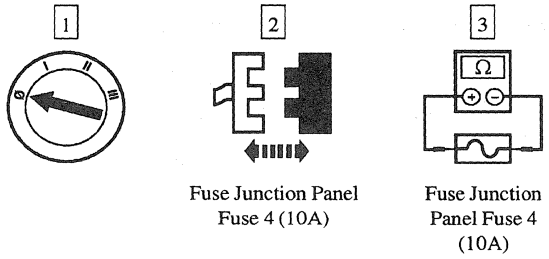	• Is the Fuse 4 (10A) OK? → **Yes** REPAIR Circuit 1002 (BK/PK) for an open. TEST the system for normal operation. → **No** GO to **K4**.
K4 CHECK CIRCUIT 1002 (BK/PK) FOR A SHORT TO GROUND	
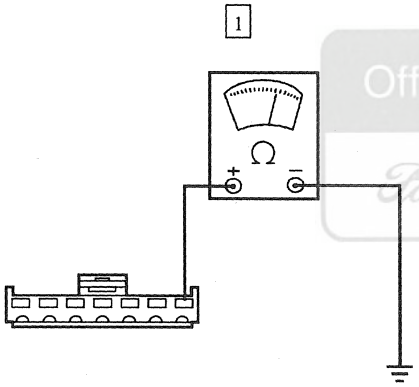	1 Measure the resistance between the inside rear view mirror connector Pin C901-7, Circuit 1002 (BK/PK) and ground. • Is the resistance 10 K ohms or less? → **Yes** REPAIR Circuit 1002 (BK/PK) for a short to ground. TEST the system for normal operation. → **No** REPLACE the inside rear view mirror. TEST the system for normal operation.
K5 CHECK CIRCUIT 57 (BK) FOR AN OPEN	
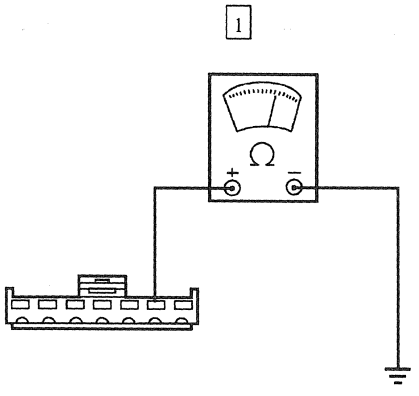	1 Measure the resistance between the inside rear view mirror connector Pin C901-6, Circuit 57 (BK) and ground. • Is the resistance 5 ohms or less? → **Yes** GO to **K6**. → **No** REPAIR Circuit 57 (BK) for an open. TEST the system for normal operation.

(Continued)

Official Licensed Ford Motor Company

DIAGNOSIS AND TESTING (Continued)

PINPOINT TEST K: THE AUTO DIMMING MIRROR DOES NOT OPERATE PROPERLY (Continued)

TEST CONDITIONS	TEST DETAILS/RESULTS/ACTIONS
K6 CHECK FOR REVERSE INPUT	
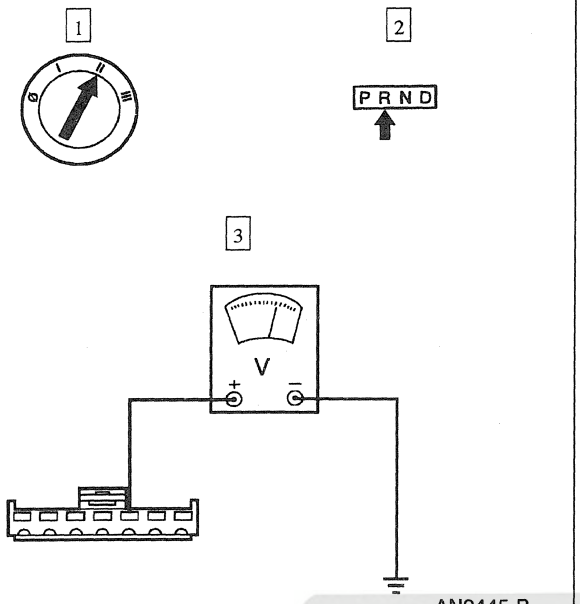	3 Measure the voltage at the inside rear view mirror connector Pin C901-5, Circuit 140 (BK/PK). • Is the voltage reading B+? → **Yes** REPLACE the inside rear view mirror. TEST the system for normal operation. → **No** REPAIR Circuit 140 (BK/PK) for an open. TEST the system for normal operation.
K7 CHECK THE INSIDE REAR VIEW MIRROR OPERATION	
	3 Set the inside rear view mirror dimming control to the HIGH position. • Does the inside rear view mirror darken and the LH outside rear view mirror does not? → **Yes** GO to **K8**. → **No** GO to **K2**.

(Continued)

Ford Motor Company

DIAGNOSIS AND TESTING (Continued)

PINPOINT TEST K: THE AUTO DIMMING MIRROR DOES NOT OPERATE PROPERLY (Continued)

TEST CONDITIONS	TEST DETAILS/RESULTS/ACTIONS
K8 CHECK THE LH OUTSIDE REAR VIEW MIRROR DIMMING	
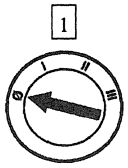 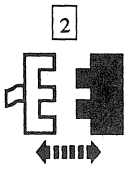 LH Outside Rear View Mirror Connector C509	3 Using a D-Size flashlight battery (1.5 volts or less), connect the positive terminal to the outside rear view mirror connector Pin C509-8, Circuit 46 (P). Connect the negative terminal to the outside rear view mirror connector Pin C509-18, Circuit 47 (LB/W). • Does the LH outside rear view mirror dim? → **Yes** GO to **K9**. → **No** REPLACE the outside rear view mirror glass. TEST the system for normal operation.
K9 CHECK CIRCUIT 47 (LB/W) FOR SHORT TO B+	
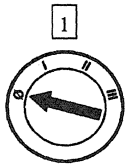 2 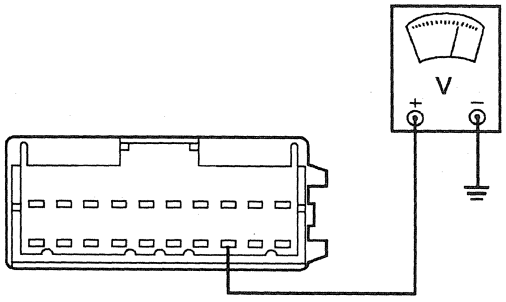 AN0446-B	2 Measure the voltage at the LH outside rear view mirror connector Pin C509-18, Circuit 47 (LB/W). • Is the voltage reading B+? → **Yes** GO to **K10**. → **No** GO to **K11**.

(Continued)

Official Licensed Product Ford Motor Company

DIAGNOSIS AND TESTING (Continued)

PINPOINT TEST K: THE AUTO DIMMING MIRROR DOES NOT OPERATE PROPERLY (Continued)

TEST CONDITIONS	TEST DETAILS/RESULTS/ACTIONS
K10 CHECK THE INSIDE REAR VIEW MIRROR FOR A SHORT	
1 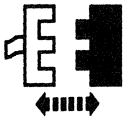 Inside Rear View Mirror Connector C901 2 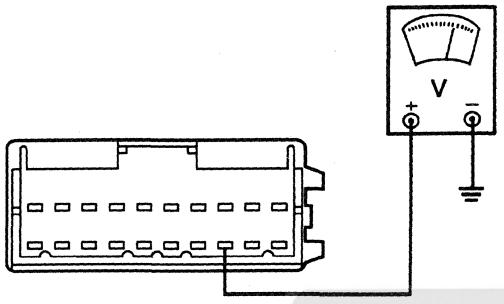 AN0446-B	2 Measure the voltage at the LH outside rear view mirror connector Pin C509-18, Circuit 47 (LB/W). • Is the voltage reading B+? → **Yes** REPAIR Circuit 47 (LB/W) for a short to battery. TEST the system for normal operation. → **No** REPLACE the inside rear view mirror. TEST the system for normal operation.
K11 CHECK CIRCUIT 46 (P) FOR A SHORT TO B+	
1 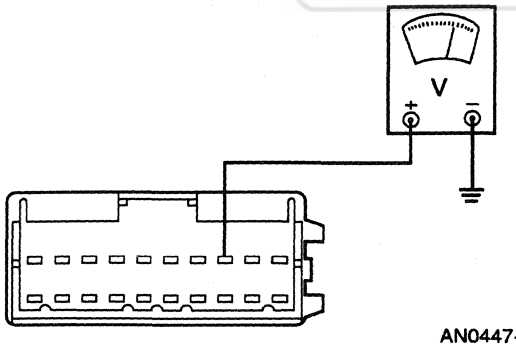 AN0447-B	1 Measure the voltage at the LH outside rear view mirror connector Pin C509-8, Circuit 46 (P). • Is the voltage reading B+? → **Yes** GO to **K12**. → **No** GO to **K13**.

Official Licensed Product Ford Motor Company

(Continued)

DIAGNOSIS AND TESTING (Continued)

PINPOINT TEST K: THE AUTO DIMMING MIRROR DOES NOT OPERATE PROPERLY (Continued)

TEST CONDITIONS	TEST DETAILS/RESULTS/ACTIONS
K12 ISOLATE THE SHORT	
1 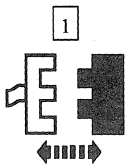 Inside Rear View Mirror Connector C901 2 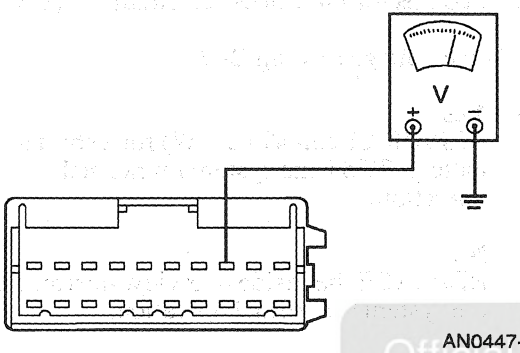 AN0447-B	2 Measure the voltage at the LH outside rear view mirror connector Pin C509-8, Circuit 46 (P). • Is the voltage reading B+? → **Yes** REPAIR Circuit 46 (P) for a short to B+. TEST the system for normal operation. → **No** REPLACE the inside rear view mirror. TEST the system for normal operation.
K13 CHECK CIRCUIT 47 (LB/W) FOR A SHORT TO GROUND	
1 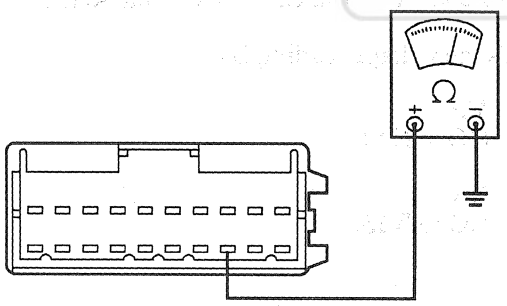 AN0448-B	1 Measure the resistance between the LH outside rear view mirror connector Pin C509-18, Circuit 47 (LB/W) and ground. • Is the resistance 10 K ohms or less? → **Yes** GO to **K14**. → **No** GO to **K15**.

Official Licensed Product
Ford Motor Company

(Continued)

DIAGNOSIS AND TESTING (Continued)

PINPOINT TEST K: THE AUTO DIMMING MIRROR DOES NOT OPERATE PROPERLY (Continued)

TEST CONDITIONS	TEST DETAILS/RESULTS/ACTIONS
K14 CHECK THE INSIDE REAR VIEW MIRROR FOR A SHORT TO GROUND	
1 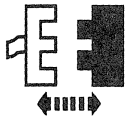 Inside Rear View Mirror Connector C901 2 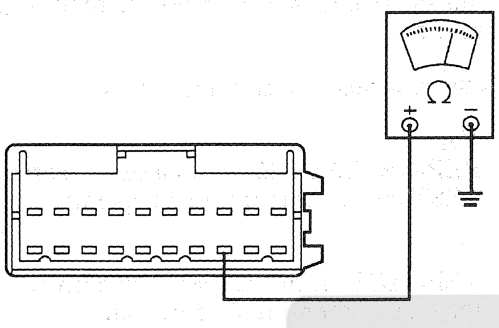 AN0448-B	2 Measure the resistance between the LH outside rear view mirror connector Pin C509-18, Circuit 47 (LB/W) and ground. • Is the resistance 10 K ohms or less? → **Yes** REPAIR Circuit 47 (LB/W) for a short to ground. TEST the system for normal operation. → **No** REPLACE the inside rear view mirror. TEST the system for normal operation.
K15 CHECK CIRCUIT 46 (P) FOR A SHORT TO GROUND	
1 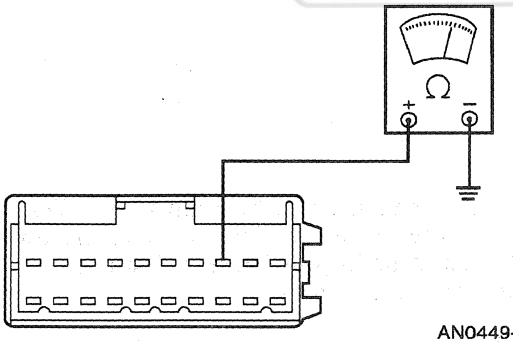 AN0449-B	1 Measure the resistance between the LH outside rear view mirror connector Pin C509-8, Circuit 46 (P) and ground. • Is the resistance 10 K ohms or less? → **Yes** GO to **K16**. → **No** GO to **K17**.

Official Licensed Product
Ford Motor Company

(Continued)

DIAGNOSIS AND TESTING (Continued)

PINPOINT TEST K: THE AUTO DIMMING MIRROR DOES NOT OPERATE PROPERLY (Continued)

TEST CONDITIONS	TEST DETAILS/RESULTS/ACTIONS
K16 CHECK FOR A SHORTED INSIDE REAR VIEW MIRROR	
1 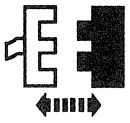 Inside Rear View Mirror Connector C901 2 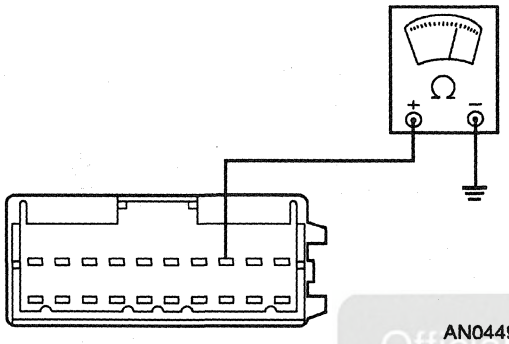 AN0449-B	2 Measure the resistance between the LH outside rear view mirror connector Pin C509-8, Circuit 46 (P) and ground. • Is the resistance 10 K ohms or less? → **Yes** REPAIR Circuit 46 (P) for a short to ground. TEST the system for normal operation. → **No** REPLACE the inside rear view mirror. TEST the system for normal operation.
K17 CHECK CIRCUIT 47 (LB/W) FOR AN OPEN	
1 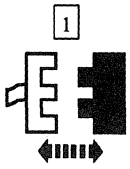 Inside Rear View Mirror Connector C901 2 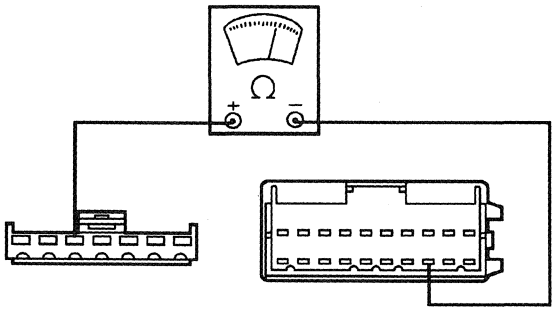 AN0450-B	2 Measure the resistance of Circuit 47 (LB/W) between the inside rear view mirror connector Pin C901-3 and the LH outside rear view mirror connector Pin C509-18. • Is the resistance 5 ohms or less? → **Yes** GO to **K18**. → **No** REPAIR Circuit 47 (LB/W) for an open. TEST the system for normal operation.

(Continued)

Official Licensed Product Ford Motor Company

DIAGNOSIS AND TESTING (Continued)

PINPOINT TEST K: THE AUTO DIMMING MIRROR DOES NOT OPERATE PROPERLY (Continued)

TEST CONDITIONS	TEST DETAILS/RESULTS/ACTIONS
K18 CHECK CIRCUIT 46 (P) FOR AN OPEN	
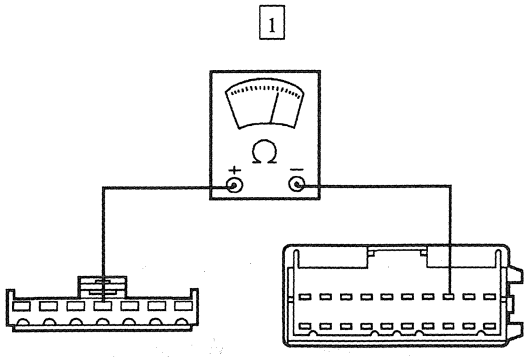 AN0451-B	1 Measure the resistance of Circuit 46 (P) between the inside rear view mirror connector Pin C901-4 and the LH outside rear view mirror connector Pin C509-8. • Is the resistance 5 ohms or less? → **Yes** REPLACE the inside rear view mirror. TEST the system for normal operation. → **No** REPAIR Circuit 46 (P) for an open. TEST the system for normal operation.

PINPOINT TEST L: THE MEMORY MIRROR IS INOPERATIVE

TEST CONDITIONS	TEST DETAILS/RESULTS/ACTIONS
L1 CHECK FOR DTCS	
DSM Self-Test	• Is the DTC U1180, U1181 and U1194 retrieved? → **Yes** REFER to the Driver Seat Module (DSM) Diagnostic Trouble Code (DTC) Index to service the DTC. → **No** GO to **L2**.

Official Licensed Product Ford Motor Company

(Continued)

DIAGNOSIS AND TESTING (Continued)

PINPOINT TEST L: THE MEMORY MIRROR IS INOPERATIVE (Continued)

TEST CONDITIONS	TEST DETAILS/RESULTS/ACTIONS
L2 CHECK THE PID MEM2__SW	
1 Select DDM PID MEM2__SW	2 Press the memory off/recall switch position 2 button. • Does the PID MEM2__SW read ON? → **Yes** GO to **L8**. → **No** GO to **L3**.
L3 CHECK THE PID MEM1__SW	
1 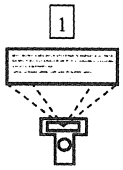 Select DDM PID MEM1__SW	2 Press the memory off/recall switch position 1 button. • Does the PID MEM1__SW read ON? → **Yes** GO to **L5**. → **No** GO to **L4**.

Official Licensed Product
Ford Motor Company

(Continued)

DIAGNOSIS AND TESTING (Continued)

PINPOINT TEST L: THE MEMORY MIRROR IS INOPERATIVE (Continued)

TEST CONDITIONS	TEST DETAILS/RESULTS/ACTIONS
L4 CHECK CIRCUIT 1077 (DG/P) FOR AN OPEN	
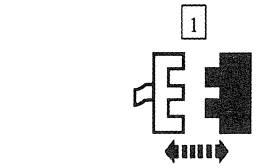 Memory Off/Recall Switch Connector C515 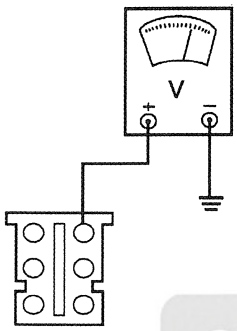 AN0454-B	2 Measure the voltage at the memory off/recall switch connector Pin C515-5, Circuit 1077 (DG/P). • Is the voltage reading B+? → **Yes** REPLACE the memory off/recall switch. TEST the system for normal operation. → **No** REPAIR Circuit 1077 (DG/P) for an open. TEST the system for normal operation.
L5 CHECK THE MEMORY POSITION 2 INPUT	
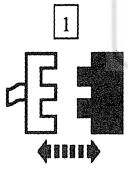 DDM Connector C456 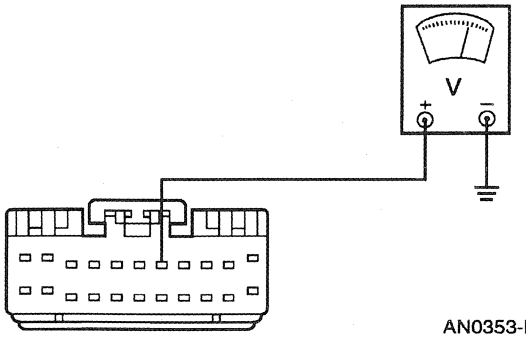 AN0353-B	2 Measure the voltage at the DDM connector Pin C456-7, Circuit 268 (BK/O).

Official Licensed Product
Ford Motor Company

(Continued)

DIAGNOSIS AND TESTING (Continued)

PINPOINT TEST L: THE MEMORY MIRROR IS INOPERATIVE (Continued)

TEST CONDITIONS	TEST DETAILS/RESULTS/ACTIONS
L5 CHECK THE MEMORY POSITION 2 INPUT (Continued)	
	3 Press the memory off/recall switch position 2 button. • Is the voltage reading B+? → **Yes** REPLACE the driver door module. TEST the system for normal operation. → **No** GO to **L6**.
L6 CHECK CIRCUIT 268 (BK/O) FOR A SHORT TO GROUND	
1 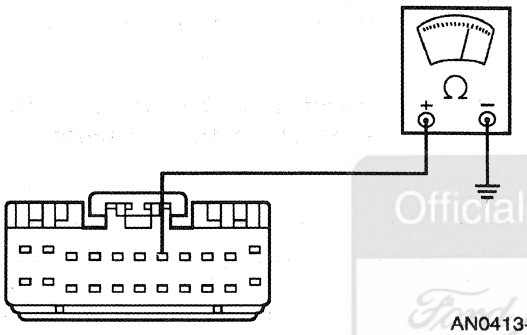 AN0413-B	1 Measure the resistance between the DDM connector Pin C456-7, Circuit 268 (BK/O) and ground. • Is the resistance 10 K ohms or less? → **Yes** REPAIR Circuit 268 (BK/O) for a short to ground. TEST the system for normal operation. → **No** GO to **L7**.
L7 CHECK CIRCUIT 268 (BK/O) FOR AN OPEN	
1 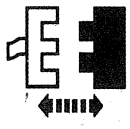 Memory Off/Recall Switch Connector C515 2 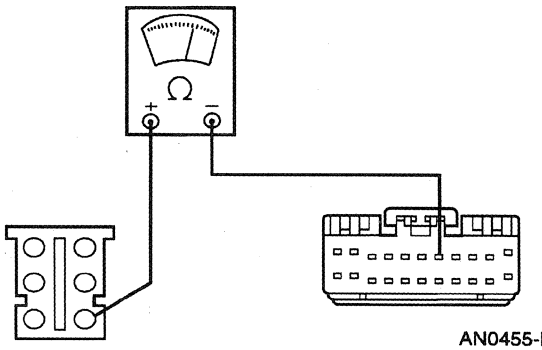 AN0455-B	2 Measure the resistance of Circuit 268 (BK/O) between the DDM connector Pin C456-7 and the memory off/recall switch connector Pin C515-1. • Is the resistance 5 ohms or less? → **Yes** REPLACE the memory off/recall switch. TEST the system for normal operation. → **No** REPAIR Circuit 268 (BK/O) for an open. TEST the system for normal operation.

Official Licensed Product Ford Motor Company

(Continued)

DIAGNOSIS AND TESTING (Continued)

PINPOINT TEST L: THE MEMORY MIRROR IS INOPERATIVE (Continued)

TEST CONDITIONS	TEST DETAILS/RESULTS/ACTIONS
L8 CHECK THE DRIVER SEAT MODULE	
1 Select DDM PID MEM1__SW	2 Press the memory off/recall switch position 1 button. • Does the PID MEM1__SW read ON? → **Yes** REPLACE the driver seat module. TEST the system for normal operation. → **No** GO to **L9**.
L9 CHECK THE MEMORY POSITION 1 INPUT	
1 DDM Connector C456 2 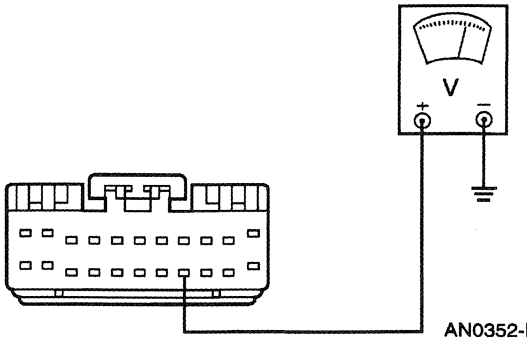 AN0352-B	2 Measure the voltage at the DDM connector Pin C456-19, Circuit 267 (BR/LG).

Official Licensed Product
Ford Motor Company

(Continued)

DIAGNOSIS AND TESTING (Continued)

PINPOINT TEST L: THE MEMORY MIRROR IS INOPERATIVE (Continued)

TEST CONDITIONS	TEST DETAILS/RESULTS/ACTIONS
L9 CHECK THE MEMORY POSITION 1 INPUT (Continued)	
	3 Press the memory off/recall switch position 1 button. • Is the voltage reading B+? → **Yes** REPLACE the driver door module. TEST the system for normal operation. → **No** GO to **L10**.
L10 CHECK CIRCUIT 268 (BK/O) FOR A SHORT TO GROUND	
1 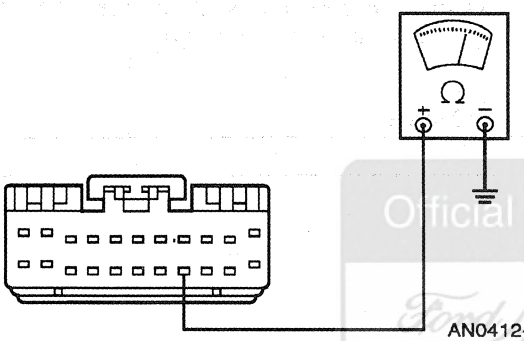 AN0412-B	1 Measure the resistance between the DDM connector Pin C456-19, Circuit 267 (BR/LG) and ground. • Is the resistance 10 K ohms or less? → **Yes** REPAIR Circuit 267 (BR/LG) for a short to ground. TEST the system for normal operation. → **No** GO to **L11**.
L11 CHECK CIRCUIT 267 (BR/LG) FOR AN OPEN	
1 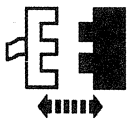 Memory Off/Recall Switch Connector C515 2 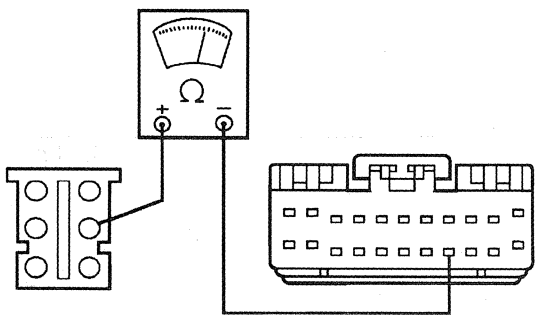 AN0456-B	2 Measure the resistance of Circuit 267 (BR/LG) between the DDM connector Pin C456-19 and the memory off/recall switch connector Pin C515-3. • Is the resistance 5 ohms or less? → **Yes** REPLACE the memory off/recall switch. TEST the system for normal operation. → **No** REPAIR Circuit 267 (BR/LG) for an open. TEST the system for normal operation.

Official Licensed Product Ford Motor Company

DIAGNOSIS AND TESTING (Continued)

PINPOINT TEST M: THE HEATED OUTSIDE MIRROR DOES NOT DEFROST

TEST CONDITIONS	TEST DETAILS/RESULTS/ACTIONS
M1 CHECK THE HEATED BACK WINDOW OPERATION	
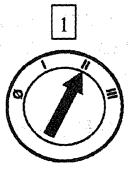	2 Press the heated back window switch. • Does the heated back window heat up? → **Yes** GO to **M2**. → **No** GO to to diagnose the heated back window system.
M2 CHECK FUSE 30 (10A)	
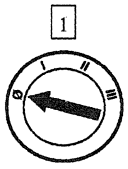 Fuse Junction Panel Fuse 30 (10A) 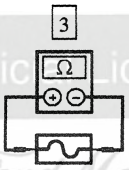 Fuse Junction Panel Fuse 30 (10A)	• Is the Fuse 30 (10A) OK? → **Yes** GO to **M6**. → **No** GO to **M3**.

(Continued)

Official Licensed Product Ford Motor Company

DIAGNOSIS AND TESTING (Continued)

PINPOINT TEST M: THE HEATED OUTSIDE MIRROR DOES NOT DEFROST (Continued)

TEST CONDITIONS	TEST DETAILS/RESULTS/ACTIONS
M3 CHECK THE SYSTEM FOR A SHORT	
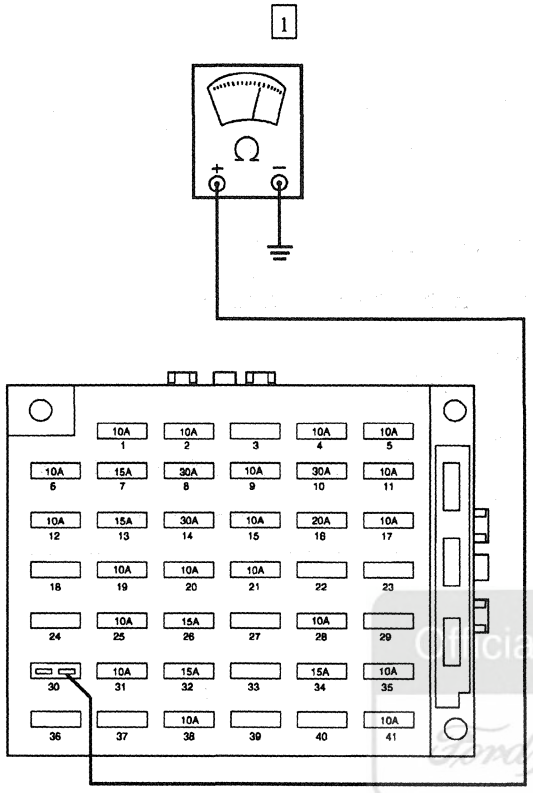 AN0457-A	1 Measure the resistance between the output cavity of the fuse junction panel Fuse 30 (10A) and ground. • Is the resistance 10 K ohms or less? → **Yes** GO to **M4**. → **No** REPLACE the Fuse 30 (10A). TEST the system for normal operation.

Official Licensed Product Ford Motor Company

(Continued)

DIAGNOSIS AND TESTING (Continued)

PINPOINT TEST M: THE HEATED OUTSIDE MIRROR DOES NOT DEFROST (Continued)

TEST CONDITIONS	TEST DETAILS/RESULTS/ACTIONS
M4 CHECK THE LH OUTSIDE REAR VIEW MIRROR FOR A SHORT	
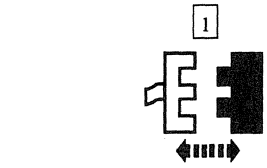 LH Outside Rear View Mirror Connector C509 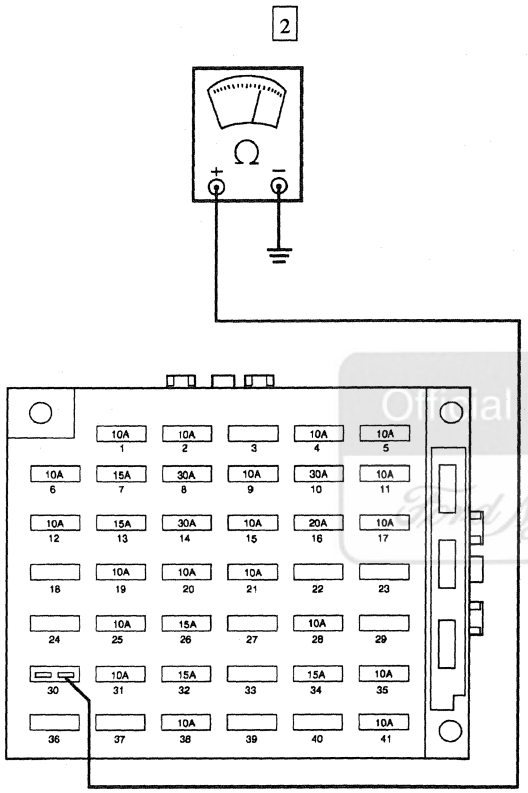 AN0457-A	2 Measure the resistance between the output cavity of the fuse junction panel Fuse 30 (10A) and ground. • Is the resistance 10 K ohms or less? → **Yes** GO to **M5**. → **No** REPLACE the LH outside rear view mirror glass. TEST the system for normal operation.

Official Licensed Product Ford Motor Company

(Continued)

DIAGNOSIS AND TESTING (Continued)

PINPOINT TEST M: THE HEATED OUTSIDE MIRROR DOES NOT DEFROST (Continued)

TEST CONDITIONS	TEST DETAILS/RESULTS/ACTIONS
M5 CHECK THE RH OUTSIDE REAR VIEW MIRROR FOR A SHORT	
1 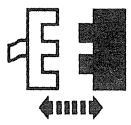 RH Outside Rear View Mirror Connector C600	2 Measure the resistance between the output cavity of the fuse junction panel Fuse 30 (10A) and ground. • Is the resistance 10 K ohms or less? → **Yes** REPAIR Circuit 59 (DG/P) for a short to ground. TEST the system for normal operation. → **No** REPLACE the RH outside rear view mirror glass. TEST the system for normal operation.

(Continued)

Official Licensed Reader
Ford Motor Company

DIAGNOSIS AND TESTING (Continued)

PINPOINT TEST M: THE HEATED OUTSIDE MIRROR DOES NOT DEFROST (Continued)

TEST CONDITIONS	TEST DETAILS/RESULTS/ACTIONS
M6 CHECK CIRCUIT 186 (BR/LB) FOR AN OPEN	
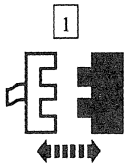 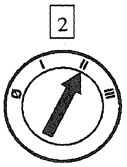 Fuse Junction Panel Fuse 30 (10A) 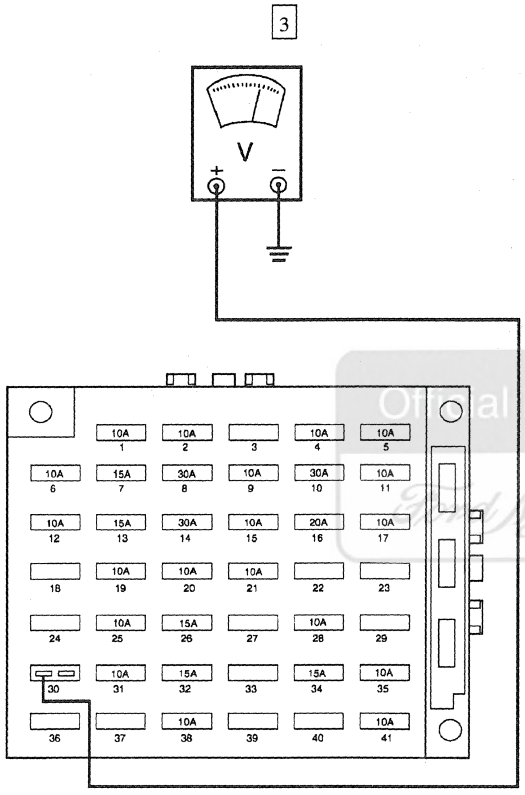 AN0510-A	3 Measure the voltage at the input cavity of the fuse junction panel Fuse 30 (10A). 4 Press the heated back window switch and light to ON. • Is the voltage reading B+? → **Yes** GO to **M7**. → **No** REPAIR Circuit 186 (BR/LB) for an open. TEST the system for normal operation.

(Continued)

Official Licensed Product Ford Motor Company

DIAGNOSIS AND TESTING (Continued)

PINPOINT TEST M: THE HEATED OUTSIDE MIRROR DOES NOT DEFROST (Continued)

TEST CONDITIONS	TEST DETAILS/RESULTS/ACTIONS
M7 CHECK FOR AN OPEN CIRCUIT TO THE LH OUTSIDE REAR VIEW MIRROR	

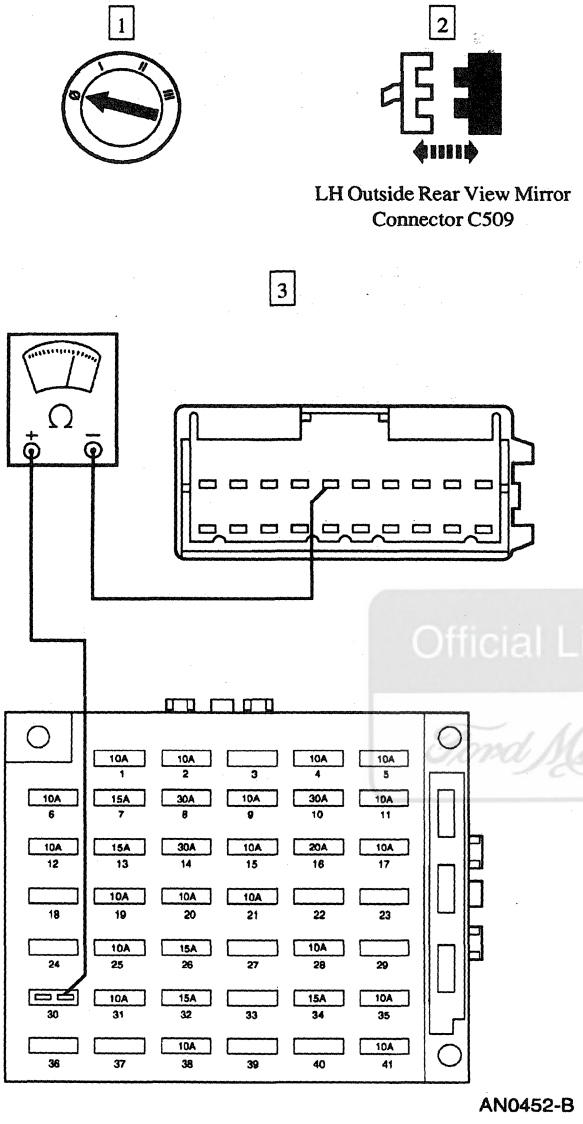

3 Measure the resistance of Circuit 59 (DG/P) between the output cavity of the fuse junction panel Fuse 30 (10A) and the LH outside rear view mirror connector Pin C509-5.

- Is the resistance 5 ohms or less?

→ **Yes**
GO to **M8**.

→ **No**
REPAIR Circuit 59 (DG/P) for an open.
TEST the system for normal operation.

Official Licensed Product
Ford Motor Company

(Continued)

DIAGNOSIS AND TESTING (Continued)

PINPOINT TEST M: THE HEATED OUTSIDE MIRROR DOES NOT DEFROST (Continued)

TEST CONDITIONS	TEST DETAILS/RESULTS/ACTIONS
M8 CHECK FOR AN OPEN CIRCUIT TO THE RH OUTSIDE REAR VIEW MIRROR	
1 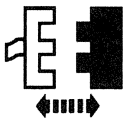 RH Outside Rear View Mirror Connector C600	
2 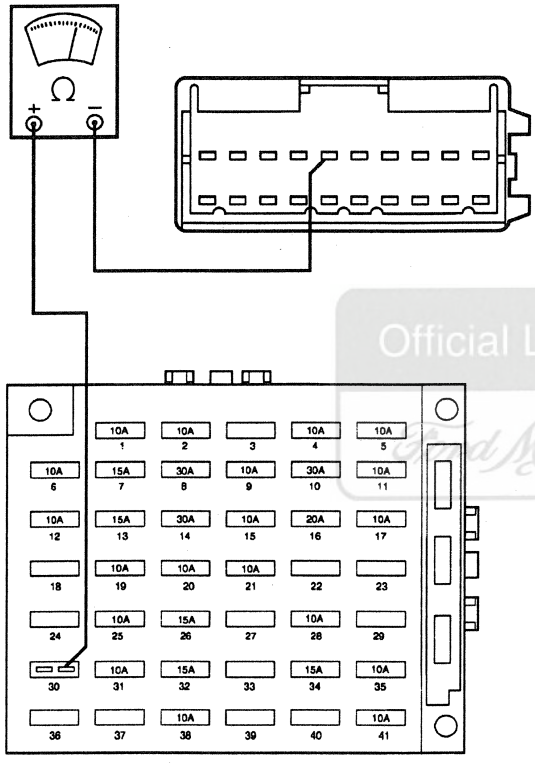 AN0452-B	2 Measure the resistance of Circuit 59 (DG/P) between the output cavity of fuse junction panel Fuse 30 (10A) and the RH outside rear view mirror connector Pin C600-5. • Is the resistance 5 ohms or less? → **Yes** If the LH outside rear view mirror does not heat up, GO to **M9**. If the RH outside rear view mirror does not heat up, GO to **M10**. → **No** REPAIR Circuit 59 (DG/P) for an open. TEST the system for normal operation.

Official Licensed Ford Motor Company

(Continued)

DIAGNOSIS AND TESTING (Continued)

PINPOINT TEST M: THE HEATED OUTSIDE MIRROR DOES NOT DEFROST (Continued)

TEST CONDITIONS	TEST DETAILS/RESULTS/ACTIONS
M9 CHECK THE LH OUTSIDE REAR VIEW MIRROR HEATER GROUND	
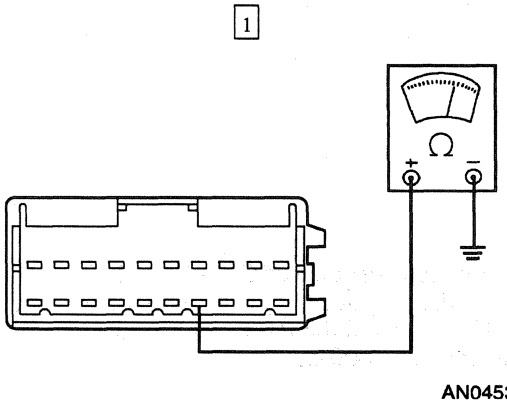 AN0453-B	1 Measure the resistance between the LH outside rear view mirror connector Pin C509-17, Circuit 57 (BK) and ground. • Is the resistance 5 ohms or less? → **Yes** REPLACE the LH outside rear view mirror glass. TEST the system for normal operation. → **No** REPAIR Circuit 57 (BK) for an open. TEST the system for normal operation.
M10 CHECK THE RH OUTSIDE REAR VIEW MIRROR HEATER GROUND	
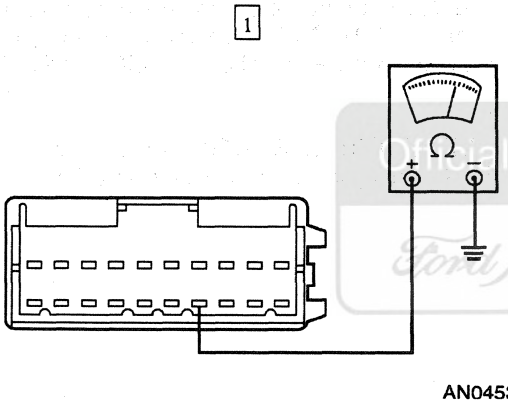 AN0453-B	1 Measure the resistance between the RH outside rear view mirror connector Pin C600-17, Circuit 57 (BK) and ground. • Is the resistance 5 ohms or less? → **Yes** REPLACE the RH outside rear view mirror glass. TEST the system for normal operation. → **No** REPAIR Circuit 57 (BK) for an open. TEST the system for normal operation.

Official Licensed Product Ford Motor Company

REMOVAL AND INSTALLATION

Mirror — Power, Outside Rear View

Removal

1. Disconnect the battery ground cable (14301).

REMOVAL AND INSTALLATION (Continued)

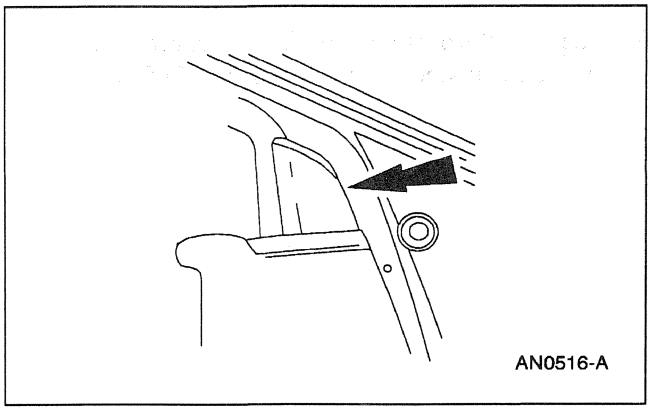

2. Remove the rear view mirror mounting hole cover (17K709) from the front door (20125).

3. Remove the front door trim panel (23942); refer to Section 501-05.

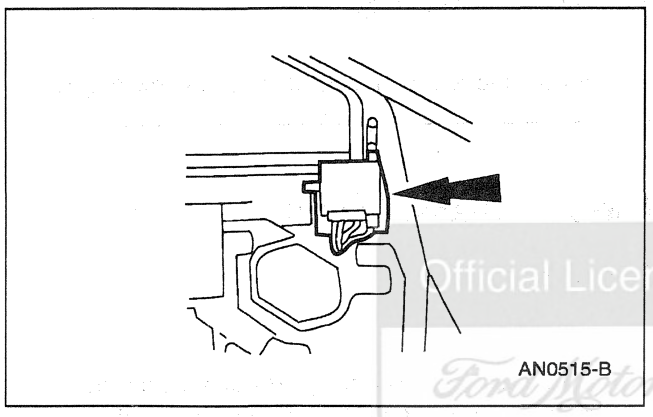

4. Disconnect the wiring harness connector and guides.

Official Licensed Product
Ford Motor Company

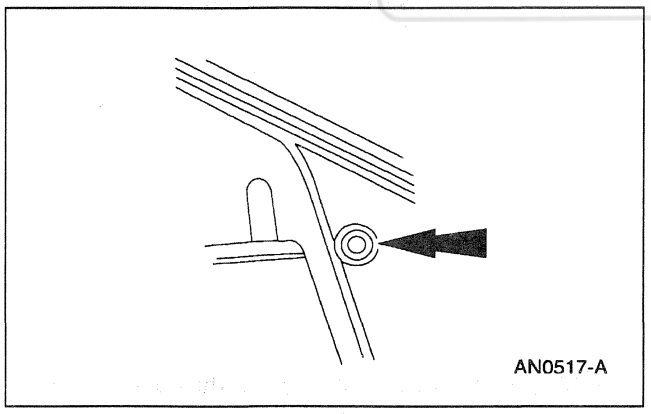

5. Remove the button plug.

REMOVAL AND INSTALLATION (Continued)

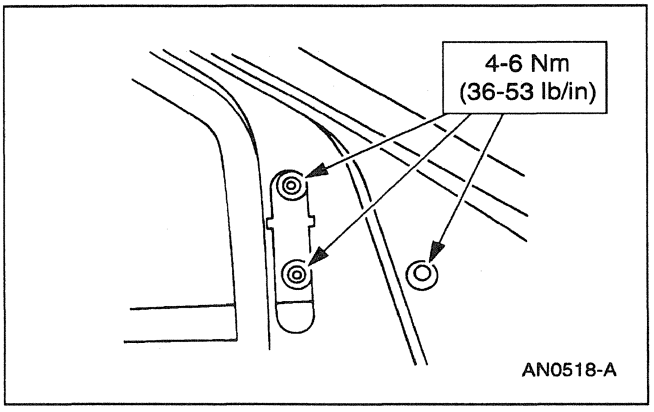

6. Remove the outside rear view mirror retaining nuts and outside rear view mirror (17682).

Installation

1. Transfer parts as required.
2. Follow the removal procedure in reverse order.

Mirror — Glass, Outside

Official Licensed Product
Ford Motor Company

Removal

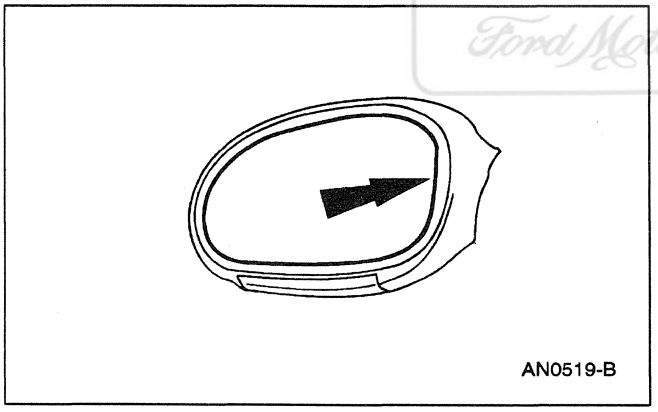

1. Push in the inside edge of the outside rear view mirror glass (17K707) to maximum travel.

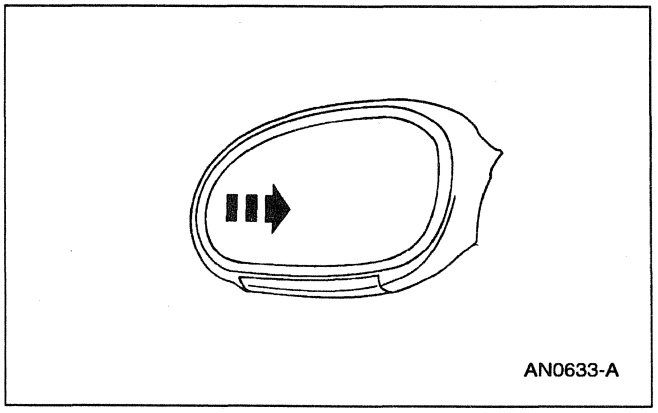

2. Firmly grasp the outside edge of the outside rear view mirror glass and pull outward to remove the outside rear view mirror glass from the outside rear view mirror motor (17D696).

REMOVAL AND INSTALLATION (Continued)

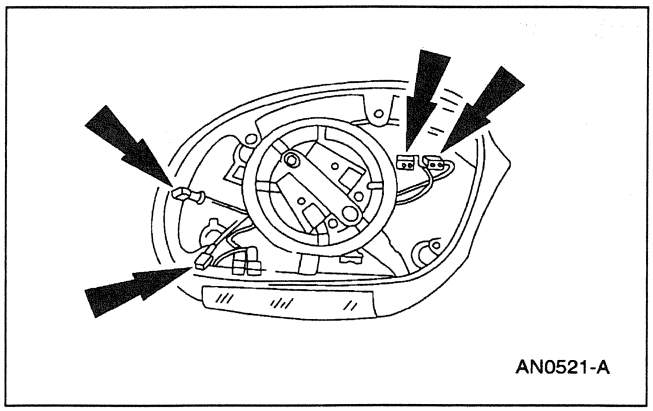

3. Disconnect the heater wiring and the automatic dimmer wires, if equipped.

Installation

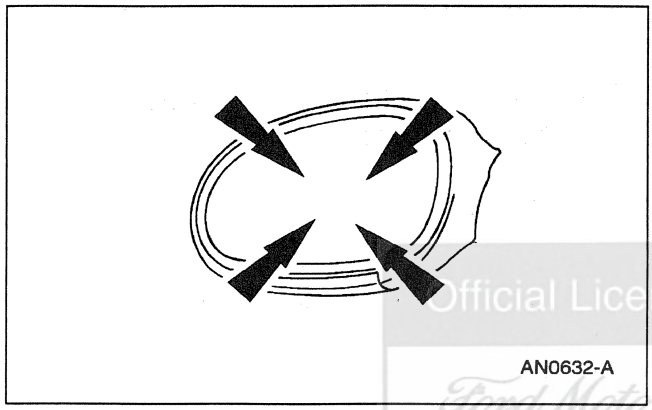

1. **NOTE:** The white foam pad on the backside of the glass assembly must remain in place during installation to prevent looseness or vibration.

   To install, connect wiring to outside rear view mirror glass if equipped, press firmly in the center of the outside rear view mirror glass until it snaps onto the outside rear view mirror motor.

Official Licensed Product
Ford Motor Company

Mirror — Motor

Removal

1. Remove the outside rear view mirror glass (17K707); refer to Mirror—Glass, Outside.

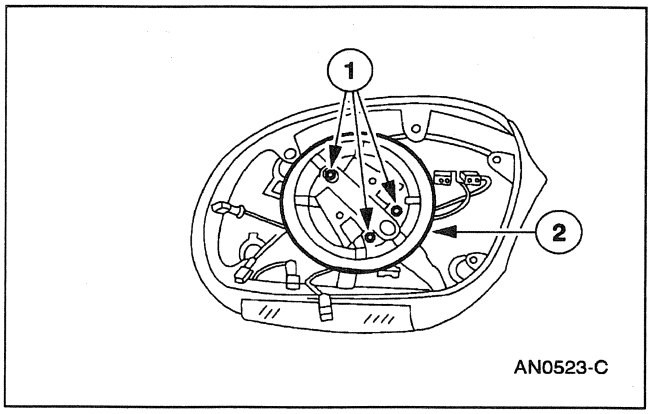

2. Remove the outside rear view mirror motor (17D696).
   1 Remove the retaining screws from the outside rear view mirror motor.
   2 Disconnect the outside rear view mirror motor wiring harness and remove the outside rear view mirror motor.

REMOVAL AND INSTALLATION (Continued)

Installation

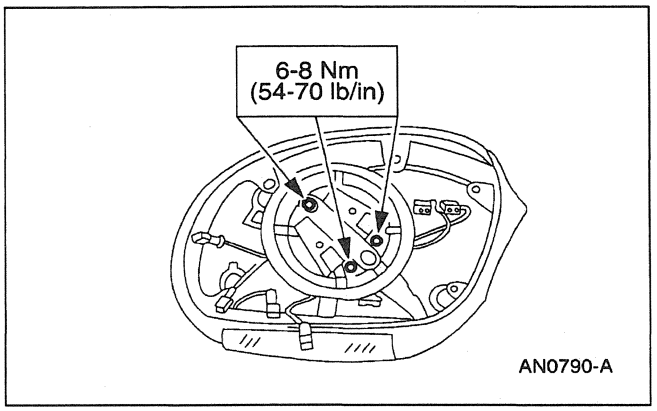

1. Follow the removal procedure in reverse order.

Mirror — Lamp and Turn Signal Indicator Assembly

Removal

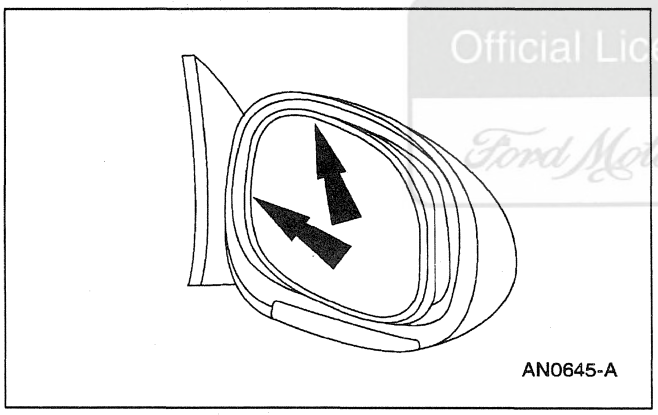

1. Push the top and the inside edge of the outside rear view mirror glass (17K707) to the maximum travel.

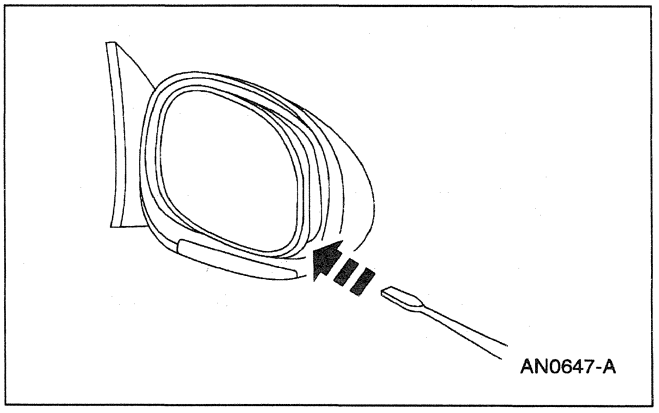

2. Insert a long, thin-blade standard screwdriver behind the outside rear view mirror glass and under the ground illumination lamp housing retaining clip.

Official Licensed Product
Ford Motor Company

REMOVAL AND INSTALLATION (Continued)

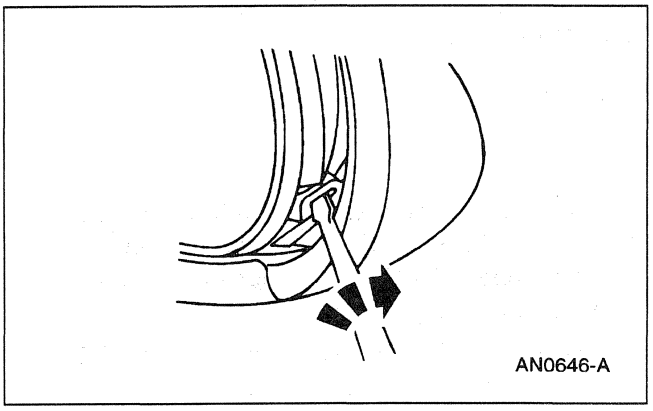

3. Turn the screwdriver (counterclockwise for the driver side or clockwise for the passenger side) to disengage the retaining clip and release the ground illumination lamp housing from the outside rear view mirror (17682).

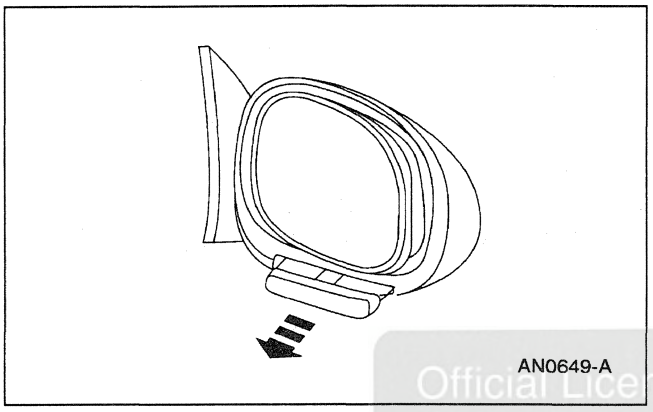

4. Disconnect the turn signal wires and ground illumination lamp socket and remove the ground illumination lamp housing.

Official Licensed Product
Ford Motor Company

Installation

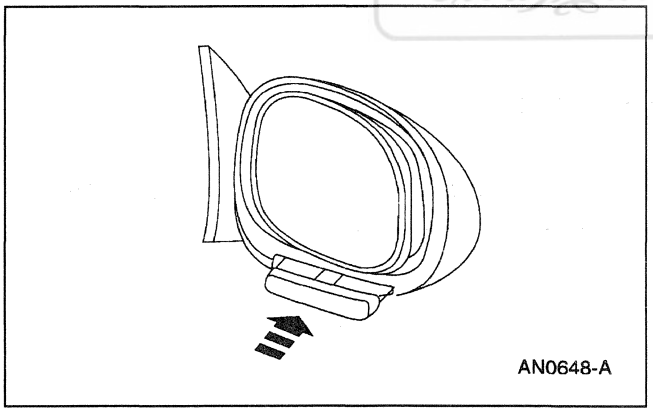

1. Install the ground illumination lamp housing.
   - Connect the turn signal wires and the ground illumination lamp socket.
   - Slide the ground illumination lamp housing into the outside rear view mirror until it snaps into place.

REMOVAL AND INSTALLATION (Continued)

Mirror — Control

Removal

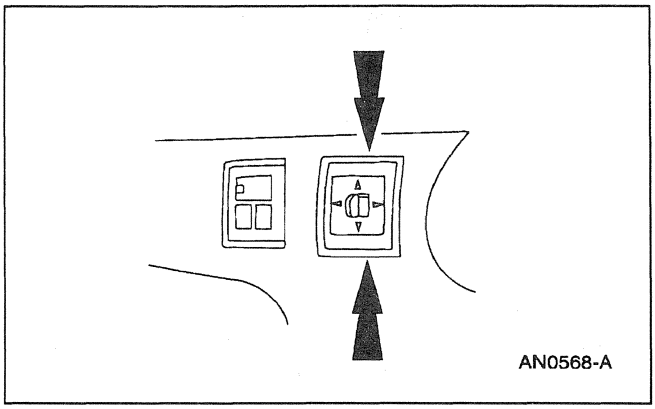

1. ⚠ **CAUTION: Use a shop towel or similar material between the pry tool and front door trim panel (23942) or damage to the front door trim panel may occur.**

   Pry the outside rear view mirror control (17B676) out from the front door trim panel.

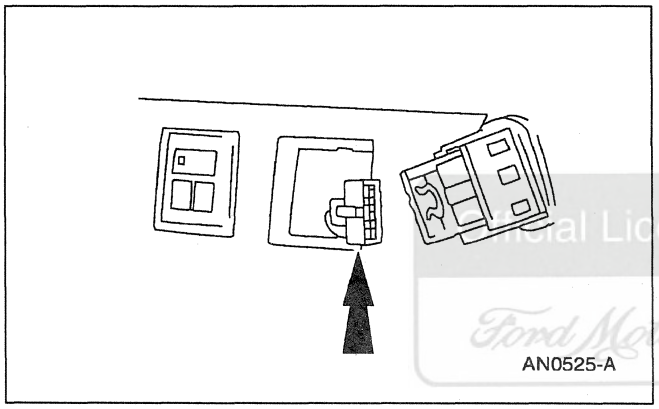

2. Disconnect the outside rear view mirror control from the driver door wiring harness.

Official Licensed Product
Ford Motor Company

Installation

1. Follow the removal procedure in reverse order.

Mirror — Inside Rear View

Special Tool(s)

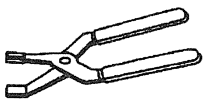 ST1793-A	Rear View Mirror Replacer 501-025 (T94P-17700-AH)

REMOVAL AND INSTALLATION (Continued)

Removal

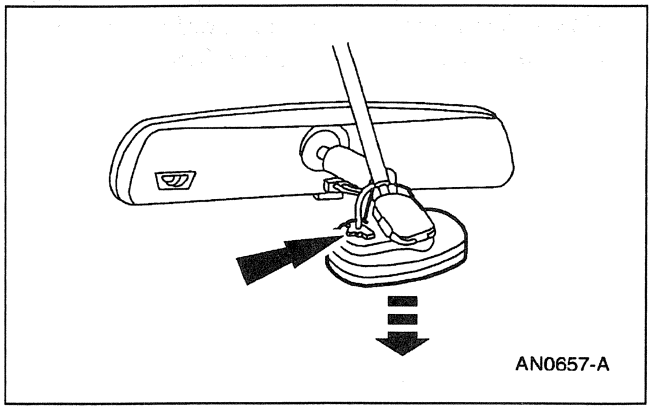

1. ⚠ **CAUTION: The inside rear view mirror is of the breakaway design. Excessive force in any direction will cause damage to the inside rear view mirror.**

   Disconnect the compass module connector and remove the compass module.

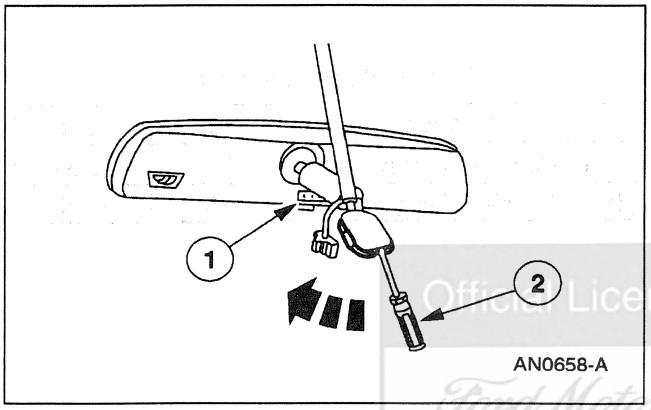

2. Remove the inside rear view mirror (17700).
   1. Disconnect the inside rear view mirror connector.
   2. Insert a small flat-blade screwdriver into the slot at the base of the inside rear view mirror. Hold the inside rear view mirror and pull the screwdriver rearward until the inside rear view mirror snaps off the inside rear view mirror bracket (17698).

Officially Licensed Product
Ford Motor Company

Installation

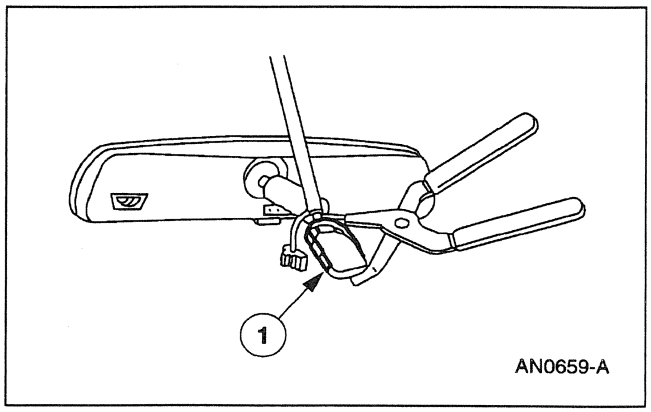

1. **NOTE:** If the inside rear view mirror bracket becomes separated from the windshield glass (03100), be sure to remove all the old adhesive and clean the inside rear view mirror bracket throughly before applying Rearview Mirror Adhesive D9AZ-19554-CA or an equipment meeting Ford specification ESB-M2G176-A.

   Install the inside rear view mirror.
   1. Slide the inside rear view mirror onto the inside rear view mirror bracket. Use the Rear View Mirror Replacer to complete the installation.
   2. Connect the inside rear view mirror connector.

REMOVAL AND INSTALLATION (Continued)

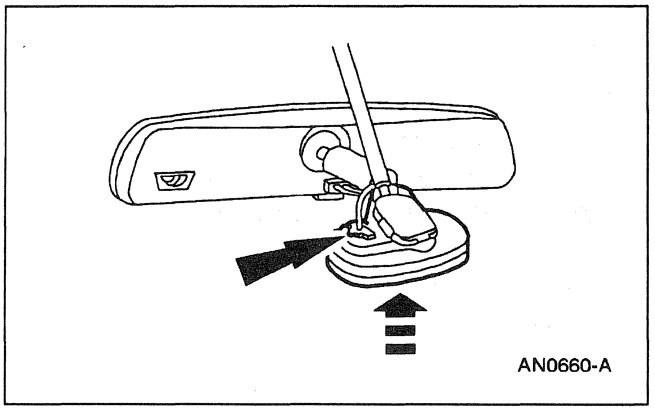

2. Connect the compass connector and snap the compass module onto the inside rear view mirror. Check the mirror looseness and c onfirm proper compass and automatic dimming function.

SPECIFICATIONS

General Specifications

Item	Specification
Adhesive	
Rear View Mirror Adhesive D9AZ-19554-CA	ESB-M2G176-A
Cleaner	
Ultra Clear Spray Glass Cleaner E4AZ-19C507-AA	ESR-M14P5-A

Torque Specifications

Description	Nm	Lb/In
Outside Mirror Assembly Nuts	4-6	36-53
Mirror Motor Retaining Screws	6-8	54-70

Ford Motor Company

SECTION 501-10 Seating

VEHICLE APPLICATION: Mark VIII

SUBJECT **PAGE**

DESCRIPTION AND OPERATION
Seats 501-10-2
DIAGNOSIS AND TESTING
Seats 501-10-4
Inspection and Verification 501-10-5
Pinpoint Tests 501-10-13
Symptom Chart 501-10-12
REMOVAL AND INSTALLATION
Armrest — Rear 501-10-186
Latch — Front Seat Back 501-10-190
Seat — Front 501-10-187
Seat — Rear 501-10-189
Switch — Seat Regulator Control 501-10-185
DISASSEMBLY AND ASSEMBLY
Seat — Front 501-10-192
SPECIFICATIONS 501-10-199

Official Licensed Product
Ford Motor Company

DESCRIPTION AND OPERATION

Seats

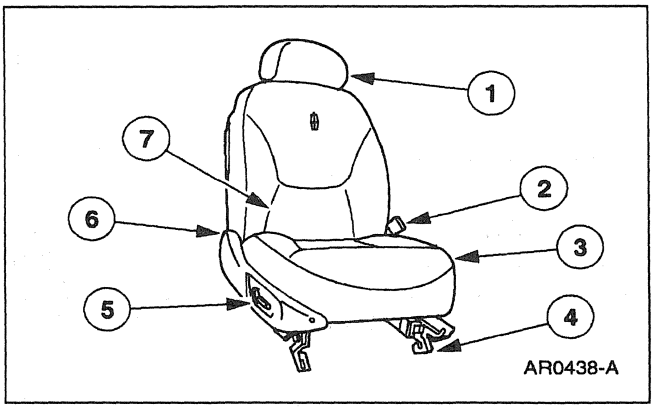

Item	Part Number	Description
1	611A08	Front Seat Back Head Restraint
2	61203	Front Safety Belt Buckle End
3	63100	Front Seat Cushion Frame and Spring
4	—	Front Seat Track, 6-Way Power
5	14A701	Seat Regulator Control Switch
6	62648	Front Seat Back Latch
7	65500	Front Seat Back Pad Adjuster

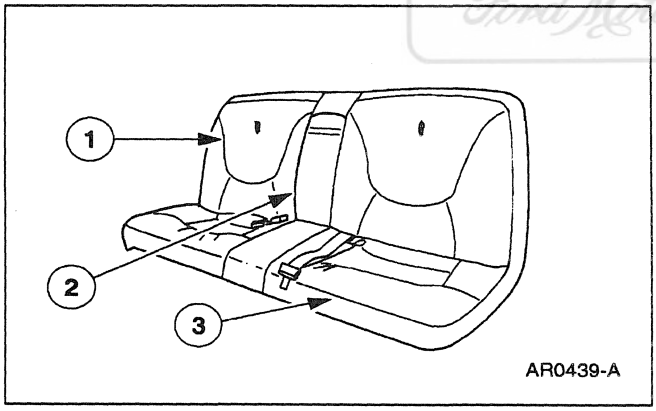

Item	Part Number	Description
1	613A38	Rear Seat Back Frame
2	—	Rear Seat Center Armrest
3	600A88	Rear Seat Cushion Pad and Frame

Seats—Front

The front seat is available in four styles:

- base.
- base with heat.
- luxury (perforated leather covers).
- luxury with heat.

The eight-way power seats have the following features:

- horizontal, vertical and front and rare tilt adjustments.
- lumbar support.
- power recline.
- autoglide.
- heat (if equipped).
- front seat back head restraint (611A08)

The LH front seat is also programmable to two different driver positions and has an easy in/easy out feature.

Seats—Eight-Way Power

The eight-way power seat has the following features:

- forward and rearward adjustment.
- height adjustment.
- tilt adjustment.
- recliner adjustment.

Adjustment of the seat may be accomplished with the seat regulator control switch (14A701) on the outboard side of the seat or with the control panel on the door.

Seats—Lumbar Support

The seat is provided with an electro-mechanical front seat back pad adjuster (65500). During the forward adjust mode, the front seat back pad adjuster compresses and flexes forward providing lumbar support.

Seats—Power Recliner

The power recliner is incorporated into the inertia front seat back latch (62648).

DESCRIPTION AND OPERATION (Continued)

The power recliner tilts the seat back backward or forward and is controlled by the power seat regulator control knob (14711) located on the side of the seat.

The power recliner cannot be repaired separately. If the power recliner needs to be repaired, the entire front seat back latch must be replaced.

Seats—Head Restraint

Each front seat is equipped with a front seat back head restraint that has the following features:

- dual post design.
- 60 degree rotation.

Seats—Heated Seat

Each heated front seat is controlled by the heated seat switches on the instrument panel below the radio. For removal and installation of the heated seat switches refer to Section 501-12. The heated seat system:

- will only operate with the ignition switch in RUN.
- will maintain a temperature automatically once it is selected.

To operate:

- Select mode:
  - — BOTH, to heat the seat back and seat cushion.
  - — BACK, to heat the seat back only.
- Rotate the thumbwheel from 0 to 1 (the lowest heat level). Allow five minutes for heat level to stabilize.
- If the heat level is not high enough for comfort, select increased heat levels 2 through 5 and allow at least two minutes for the heat level to stabilize at any newly selected level.
- If the heated seat switch in not turned off (0 on thumbwheel), the seat will heat to the selected temperature each time the ignition switch is turned to RUN.

Seats—Auto Glide

Both LH and RH front seats are equipped with the auto-glide function to allow easy entry into the rear seat.

- The auto-glide function automatically moves the seat forward or rearward when the seat back is manually tilted forward to its forward stop position or rearward to its upright position.
- The seat will stop moving if the seat back is moved to its upright position while the seat is moving forward.
- The seat will resume travel if the seat back is returned to its stop position.
- The seat will stop immediately if the transmission range selector lever is shifted from NEUTRAL or PARK while the seat is moving.

Auto-glide operates as follows:

- When the ignition switch is OFF:
  - — the driver seat auto-glide will only function when the transmission range selector lever is in NEUTRAL or PARK, and at least one of the vehicle front doors (20124) is open.
  - — the passenger seat auto-glide will only function when the ignition switch is in RUN or ACC and at least one of the vehicle front doors is open.

Seats—Easy Access/Easy Out

The easy in/easy out feature of the driver seat moves the seat two inches back when:

- the ignition key is removed.

The easy in/easy out feature of the driver seat moves the seat two inches forward when:

- the ignition switch is turned to RUN.
- the driver door is opened, then closed.

Official Licensed Product
Ford Motor Company

Seats—Programmable Seat

The memory seat system allows automatic positioning of the driver seat to two programmable positions using the memory switch located on the driver front door trim panel (23942), the key fob or the keypad on the door.

- To program position one, press button 1, then move the driver seat to the desired position using the manual controls. Two seconds after moving the seat, a message appears on the message center "SAVED TO DRIVER 1".
- To program position two, repeat the previous procedure using button 2.
- To recall position one, press button 1.
- To recall position two, press button 2.
- A position can only be recalled when the transmission range selector is in PARK or NEUTRAL.

DESCRIPTION AND OPERATION (Continued)

- If the memory has been lost due to power being removed from the vehicle, the memory positions will be updated when the ignition switch is first turned to RUN. These positions are stored in the driver seat module.
- If the sensors on the seat track are not connected, the memory or manual system will not work.

Seats—Front Seat Back, Latch

WARNING: THE INERTIA FRONT SEAT BACK LATCH ASSEMBLY IS FACTORY-INSTALLED IN ITS PROPER LOCATION. CUSTOMER OR DEALER MAINTENANCE IS NOT REQUIRED. PROPER FRONT SEAT BACK LATCH FUNCTION IN EMERGENCY SITUATIONS REQUIRES THAT THE SEAT BACK BE IN ITS FULL REARWARD NORMAL POSITION AND AGAINST THE REARWARD STOPS IN THE FRONT SEAT BACK LATCH ASSEMBLY.

THEREFORE, THE AREA BEHIND THE SEAT MUST BE KEPT CLEAR AT ALL TIMES TO ALLOW FULL REARWARD TRAVEL OF THE SEAT BACK. IN ADDITION, REAR SEAT PASSENGERS SHOULD NOT LEAN ON THE FRONT SEAT BACKS WHILE THE VEHICLE IS IN MOTION. THE FORWARD FORCE ON THE SEAT BACK FROM THE REAR PASSENGER IN AN EMERGENCY SITUATION MAY PREVENT PROPER OPERATION OF THE INERTIA FRONT SEAT BACK LATCH MECHANISM.

NOTE: The front seat back latch must be replaced if any component is non-functional or damaged.

- The inertia front seat back latch remains unlocked with normal usage and locks only during vehicle deceleration (emergency stopping or upon impact) or on steep downhill grades.
- A manual (override) release handle is provided only to help unlock the front seat back latch in the event of front seat back latch lockup.

The only authorized repair of the front seat back latch includes:

- tightening of retaining screws to correct specification.
- replacement of a front seat back latch.
- removal of any foreign material, such as tie straps, pieces of foam and trim.

Ford Licensed Product Motor Company

DIAGNOSIS AND TESTING

Seats

Refer to Electrical and Vacuum Troubleshooting Manual, Cell 58, Lighting Control Module for schematic and connector information.

Refer to Electrical and Vacuum Troubleshooting Manual, Cell 119, Heated Seats for schematic and connector information.

Refer to Electrical and Vacuum Troubleshooting Manual, Cell 122, Power Lumbar Seats for schematic and connector information.

DIAGNOSIS AND TESTING (Continued)

Refer to Electrical and Vacuum Troubleshooting Manual, Cell 123, Power Memory Seats for schematic and connector information.

Special Tool(s)

ST1137-A	73 Digital Multimeter 105-R0051 or equivalent
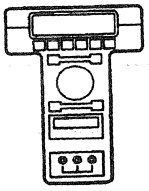 ST1217-A	New Generation Star (NGS) Tester 418-F048 (007-00500) or equivalent

Inspection and Verification

1. Verify the customer's concern by operating the power seat(s) to duplicate the condition.
2. Inspect to determine if one of the following mechanical or electrical concerns apply:

Visual Inspection Chart

Mechanical	Electrical
• Front seat tracks obstructed. • Seat at limit(s) of travel.	• Open fuse junction panel Fuses 35 (10A), 12 (10A), 4 (10A), 5 (10A) and 34 (15A). • Loose, corroded or damaged connectors. • Damaged switches. • Damaged motors.

3. If the inspection reveals obvious concern(s) that can be readily identified, service as required.
4. If the concern remains after the inspection, connect the New Generation Star (NGS) Tester to the data link connector (DLC) located beneath the instrument panel and select the vehicle to be tested from the NGS menu. If the NGS does not communicate with the vehicle:
   - check that the program card is properly installed.
   - check the connections to the vehicle.
   - check the ignition switch position.

   If the NGS still does not communicate with the vehicle, refer to the New Generation Star Tester manual.
5. Perform the DATA LINK DIAGNOSTIC TEST using the NGS. If the NGS responds with:
   - CKT 914, CKT 915 or CKT 70 = ALL MODULES NO RESPONSE/NOT EQUIPPED, go to Communication System Diagnostics in Section 418-00 to diagnose the network concern.
   - NO RESPONSE/NOT EQUIPPED for the driver seat module (DSM), go to Pinpoint Test G.
   - NO RESPONSE/NOT EQUIPPED for the passenger seat module (PSM), go to Pinpoint Test H.
   - NO RESPONSE/NOT EQUIPPED for the steering column/ignition/lighting control module (SCIL), go to Pinpoint Test J.
   - SYSTEM PASSED for the DSM, retrieve and record the continuous diagnostic trouble codes (DTCs), erase the continuous DTCs, then execute Self Test Diagnostics for the DSM.
   - SYSTEM PASSED for the PSM, retrieve and record the continuous diagnostic trouble codes (DTCs), erase the continuous DTCs, then execute Self Test Diagnostics for the PSM.
   - SYSTEM PASSED for the SCIL, retrieve and record the continuous diagnostic trouble codes (DTCs), erase the continuous DTCs, then execute Self Test Diagnostics for the SCIL.
6. If the DSM DTCs retrieved are related to the concern, go to the driver seat module (DSM) Diagnostic Trouble Code (DTC) Index to continue diagnostics.

   If the PSM DTCs retrieved are related to the concern, go to the passenger seat module (PSM) Diagnostic Trouble Code (DTC) Index to continue diagnostics.

   If the SCIL DTCs retrieved are related to the concern, go to the steering column/ignition/lighting control module (SCIL) Diagnostic Trouble Code (DTC) Index to continue diagnostics.
7. If no DTCs related to the concern are retrieved, go to the Symptom Chart to continue diagnostics.

Official Licensed Products Ford Motor Company

DIAGNOSIS AND TESTING (Continued)

DRIVER SEAT MODULE (DSM) DIAGNOSTIC TROUBLE CODE (DTC) INDEX

DTC	Description	DTC caused by	Action to Take
B1342	ECU Defective	DSM	GO to DTC B1342.
B1462	Drivers Safety Belt Switch Circuit Failure	DSM	GO to Section 413-08.
B1597	Drivers Seat Seatback Autoglide Forward Switch Circuit Short to Ground	DSM	GO to Pinpoint Test A.
B1676	Battery Voltage Out of Range	DSM	GO to DTC B1676.
B1703	Seat Driver Recline Forward Switch Circuit Short to Battery	DSM	GO to Pinpoint Test B.
B1707	Seat Driver Recline Rearward Switch Circuit Short to Battery	DSM	GO to Pinpoint Test B.
B1711	Seat Driver Front Up Switch Circuit Short to Battery	DSM	GO to Pinpoint Test C.
B1715	Seat Driver Front Down Switch Circuit Short to Battery	DSM	GO to Pinpoint Test C.
B1719	Seat Driver Forward Switch Circuit Short to Battery	DSM	GO to Pinpoint Test D.
B1723	Seat Driver Rearward Switch Circuit Short to Battery	DSM	GO to Pinpoint Test D.
B1727	Seat Driver Rear Up Switch Circuit Short to Battery	DSM	GO to Pinpoint Test E.
B1731	Seat Driver Rear Down Switch Circuit Short to Battery	DSM	GO to pinpoint Test E.
B1950	Seat Rear Up/Down Potentiometer Feedback Circuit Failure	DSM	GO to DTC B1950.
B1954	Seat Front Up/Down Potentiometer Feedback Circuit Failure	DSM	GO to DTC B1954.
B1958	Seat Recline Forward/Backward Potentiometer Feedback Circuit Failure	DSM	GO to DTC B1958.
B1962	Seat Horizontal Forward/Backward Potentiometer Feedback Circuit Failure	DSM	GO to DSM DTC DB1962.
B1986	Driver Seat Seatback Autoglide Rearward Switch Circuit Failure	DSM	GO to DTC B1986.
B2312	Mirror Passenger Horizontal Feedback Potentiometer Circuit Failure	DSM	GO to Section 501-09.
B2316	Mirror Passenger Vertical Feedback Potentiometer Circuit Failure	DSM	GO to Section 501-09.
B2320	Mirror Driver Horizontal Feedback Potentiometer Circuit Failure	DSM	GO to Section 501-09.
B2324	Mirror Driver Vertical Feedback Potentiometer Circuit Failure	DSM	GO to Section 501-09.
U1059	SCP Invalid or Missing Data for Transmission/PRNDL	PCM	REFER to the Powertrain Control/Emissions Diagnosis Manual [1].
U1117	SCP Invalid or Missing Data for Electrical Energy Management	SCIL	GO to Section 501-11, Inspection and Verification to continue the diagnosis.
U1135	SCP Invalid or Missing Data for Ignition Switch/Starter	SCIL	GO to Section 501-12, Inspection and Verification to continue the diagnosis.
U1180	SCP Invalid or Missing Data for Personalization (Memory) Features	DDM	GO to Section 501-09, Inspection and Verification to continue the diagnosis.

(Continued)

1 Can be purchased as a separate item.

DIAGNOSIS AND TESTING (Continued)

DRIVER SEAT MODULE (DSM) DIAGNOSTIC TROUBLE CODE (DTC) INDEX

DTC	Description	DTC caused by	Action to Take
U1181	SCP Invalid or Missing Data for Personalization (Memory) Features	DDM	GO to Section 501-09, Inspection and Verification to continue the diagnosis.
U1194	SCP Invalid or Missing Data for Mirrors	DDM	GO to Section 501-09, Inspection and Verification to continue the diagnosis.
U1199	SCP Invalid or Missing Data for External Access (Doors)	DDM/SCIL	GO to Section 417-02, Inspection and Verification to continue the diagnosis.

DRIVER SEAT MODULE (DSM) PARAMETER IDENTIFICATION (PID) INDEX

Display	Description	PID Content
CCNT__DS	Number of Continuous DTCs on DSM	one count per bit
D__SBELT	Driver's Safety Belt	IN OUT
PMIR__H	Passengers Mirror Horizontal	SENSED NOTSEN
PMIR__V	Passengers Mirror Vertical	SENSED NOTSEN
DMIR__H	Drivers Mirror Horizontal	SENSED NOTSEN
DMIR__V	Drivers Mirror Vertical	SENSED NOTSEN
SRCL__MT	Drivers Seat Recline Motor	SENSED NOTSEN
SFWD__MT	Drivers Seat Forward Motor	SENSED NOTSEN
SREARMT	Drivers Seat Rear Motor	SENSED NOTSEN
SFNT__MT	Drivers Seat Front Motor	SENSED NOTSEN
SRCL__SW	Power Seat Switch - Recline	SHORT RWD FWD OFF
SFWD__SW	Power Seat Switch - Forward/Rearward	SHORT RWD FWD OFF
SREARSW	Power Seat Switch - Rear	SHORT UP DOWN OFF
SFNT__SW	Power Seat Switch - Front	SHORT UP DOWN OFF

(Continued)

DRIVER SEAT MODULE (DSM) PARAMETER IDENTIFICATION (PID) INDEX

Display	Description	PID Content
AGLIDEF	Autoglide Forward Switch	ACTIVE notACT
AGLIDER	Autoglide Rearward Signal	ACTIVE notACT

DRIVER SEAT MODULE (DSM) ACTIVE COMMAND INDEX

Active Command	Display	Action
PID Latch	PID LATCH	ON OFF
Driver Seat Control	FRONT UP	ON OFF
	FRONT DWN	ON OFF
	REAR UP	ON OFF
	REAR DWN	ON OFF
	HORZ FWD	ON OFF
	HORZ BWD	ON OFF
	RECL FWD	ON OFF
	RECL BWD	ON OFF
Power Mirror Control	DR UP	ON OFF
	DR DOWN	ON OFF
	DR LEFT	ON OFF
	DR RIGHT	ON OFF
	PR UP	ON OFF
	PR DOWN	ON OFF
	PR LEFT	ON OFF
	PR RIGHT	ON OFF

Ford Licensed Product Motor Company

PASSENGER SEAT MODULE (PSM) DIAGNOSTIC TROUBLE CODE (DTC) INDEX

DTC	Description	DTC caused by	Action to Take
B1248	Passenger Seatback Autoglide Rearward Switch Circuit Open	PSM	GO to DTC B1248.
B1342	ECU Defective	PSM	GO to DTC B1342.

(Continued)

DIAGNOSIS AND TESTING (Continued)

PASSENGER SEAT MODULE (PSM) DIAGNOSTIC TROUBLE CODE (DTC) INDEX

DTC	Description	DTC caused by	Action to Take
B1360	Ignition Switch RUN/ACC Circuit Open	PSM	GO to DTC B1360.
B1565	Door Ajar Signal Circuit Short to Battery	PSM	GO to DTC B1565.
B1599	Passenger Seatback Autoglide Forward Switch Short to Ground	PSM	GO to Pinpoint Test A.
B1676	Battery Voltage Out of Range	PSM	GO to DTC B1676.
B1962	Passenger Seat Horizontal Forward/Rearward Potentiometer Feedback Circuit Failure	PSM	GO to PSM DTC PB1962.
B1972	Passenger Rear Seat Up Switch Circuit Short to Battery	PSM	GO to Pinpoint Test E.
B1973	Passenger Rear Seat Down Switch Circuit Short to Battery	PSM	GO to Pinpoint Test E.
B1974	Passenger Seat Recline Forward Switch Circuit Short to Battery	PSM	GO to Pinpoint Test B.
B1975	Passenger Seat Recline Back Switch Short to Battery	PSM	GO to Pinpoint Test B.
B1976	Passenger Seat Forward Switch Circuit Short to Battery	PSM	GO to Pinpoint Test D.
B1977	Passenger Front Seat Up Switch Circuit Short to Battery	PSM	GO to Pinpoint Test C.
B1978	Passenger Front Seat Down Switch Circuit Short to Battery	PSM	GO to Pinpoint Test C.
B1979	Passenger Seat Rearward Switch Circuit Short to Battery	PSM	GO to Pinpoint Test D.

Original Licensed Product
Ford Motor Company

PASSENGER SEAT MODULE (PSM) PARAMETER IDENTIFICATION (PID) INDEX

Display	Description	PID Content
CCNT__PS	Number of Continuous DTCs On PSM	one count per bit
SFNTPOS	Sensor	SENSED notSEN
DOOR	Door Ajar	AJAR CLOSED
IGN__LCM	Ignition Switch	ACCSSY
SRCL__SW	Power Seat Switch - Recline	SHORT RWD FWD OFF
SFWD__SW	Power Seat Switch - Forward/Rearward	SHORT RWD FWD OFF
SREARSW	Power Seat Switch - Rear	SHORT UP DOWN OFF
SFNT__SW	Power Seat Switch - Front	SHORT UP DOWN OFF
AUTOGLD	Autoglide Seat Input Switches	RWD, FWD, OFF

PASSENGER SEAT MODULE (PSM) ACTIVE COMMAND INDEX

Active Command	Display	Action
PID Latch	PID LATCH	ON OFF
Passenger Seat Control	FRONT UP	ON OFF
	FRONT DOWN	ON OFF
	REAR UP	ON OFF
	REAR DOWN	ON OFF
	HORZ FWD	ON OFF
	HORZ BWD	ON OFF
	RECL FWD	ON OFF
	RECL BWD	ON OFF

DIAGNOSIS AND TESTING (Continued)

STEERING COLUMN/IGNITION/LIGHTING CONTROL (SCIL) MODULE DIAGNOSTIC TROUBLE CODE (DTC) INDEX

DTC	Description	DTC caused by	Action to Take
C1446	Brake Switch Circuit Failure	SCIL	GO to Section 206-05.
B1246	Panel Dim Potentiometer Switch Circuit Failure	SCIL	GO to Section 417-02.
B1312	Lamp Headlamp Input Circuit Short to Battery	SCIL	GO to Section 417-01.
B1334	Luggage Compartment Door Ajar Circuit Short to Ground	SCIL	GO to Section 417-02.
B1342	ECU is Defective	SCIL	GO to Section 417-01.
B1353	Ignition Key-In Circuit Open	SCIL	GO to Section 501-12.
B1360	Ignition RUN/ACC Circuit Open	SCIL	GO to Section 501-12.
B1364	Ignition START Circuit Open	SCIL	GO to Section 501-12.
B1446	Wiper Park Sense Circuit Failure	SCIL	GO to Section 417-01.
B1485	Brake Pedal Input Short to B+	SCIL	GO to Section 417-01.
B1509	Flash-to-Pass Switch Circuit Short to Battery	SCIL	GO to Section 417-01.
B1522	Hood Switch Circuit Short to Ground	SCIL	GO to Section 419-01A.
B1562	Door Lock Cylinder Circuit Short to Ground	SCIL	GO to Section 419-01A.
B1566	Door Ajar Circuit Short to Ground	SCIL	GO to Section 417-02.
B1600	PATS Ignition Key Transponder Signal is Not Received	SCIL	GO to Section 419-01B.
B1601	PATS Received Incorrect Key Code from Ignition Key Transponder	SCIL	GO to Section 419-01B.
B1676	Battery Voltage Out of Range	SCIL	GO to Section 417-01.
B1682	PATS is Disabled (Check Link Between PATS and Transponder)	SCIL	GO to Section 419-01B.
B1687	Lamp Dome Input Circuit Short to Battery	SCIL	GO to Section 417-02.
B1689	Autolamp Delay Circuit Failure	SCIL	GO to Section 417-01.
B1796	Headlamp Low Beam Circuit Short to Battery	SCIL	GO to Section 417-01.
B1875	Turn Signal/Hazard Switch Signal Circuit Failure	SCIL	GO to Section 417-01.
B1980	Bulb Outage Condition Detected	SCIL	GO to Section 417-01.
B2328	Steering Column Reach Feedback Potentiometer Circuit Failure	SCIL	GO to Section 211-05.
B2332	Steering Column Tilt Feedback Potentiometer Circuit Failure	SCIL	GO to Section 211-05.
B2351	Steering Column Switch Signal Circuit Failure	SCIL	GO to Section 211-05.
U1027	SCP Invalid or Missing Data for Engine RPM	PCM	REFER to the Powertrain Control/Emissions Diagnosis Manual [2].
U1041	SCP Invalid or Missing Data for Vehicle Speed	ABS	GO to Section 206-09, Inspection and Verification to continue the diagnosis.
U1057	SCP Invalid or Missing Data for Vehicle Configuration	SCIL	GO to Section 417-01, Inspection and Verification to continue the diagnosis.

(Continued)

Ford Motor Company

DIAGNOSIS AND TESTING (Continued)

STEERING COLUMN/IGNITION/LIGHTING CONTROL (SCIL) MODULE DIAGNOSTIC TROUBLE CODE (DTC) INDEX

DTC	Description	DTC caused by	Action to Take
U1059	SCP Invalid or Missing Data for Transmission/PRNDL	PCM	REFER to the Powertrain Control/Emissions Diagnosis Manual [3].
U1123	SCP Invalid or Missing Data for Odometer	ABS	GO to Section 206-09, Inspection and Verification to continue the diagnosis.
U1147	SCP Invalid or Missing Data for Vehicle Security	PCM	PERFORM the J1850 Communication Network Diagnostics. GO to Communication Network Diagnostics in Section 418-00.
U1180	SCP Invalid or Missing Data for Personalization (Memory) Features	DDM	GO to Section 501-09, Inspection and Verification to continue the diagnosis.
U1181	SCP Invalid or Missing Data for Personalization (Memory) Features	DDM	GO to Section 501-09, Inspection and Verification to continue the diagnosis.
U1197	SCP Invalid or Missing Data for Door Locks	DDM	GO to Section 501-14B, Inspection and Verification to continue the diagnosis.
U1198	SCP Invalid or Missing Data for External Access (Doors)	DDM	GO to Section 501-14B, Inspection and Verification to continue the diagnosis.
U1199	SCP Invalid or Missing Data for External Access (Doors)	DDM	GO to Section 417-02, Inspection and Verification to continue the diagnosis.
U1211	SCP Invalid or Missing Data for Restraints	DSM	GO to Section 413-08, Inspection and Verification to continue the diagnosis.
U1222	SCP Invalid or Missing Data for Interior Lamps	DDM	GO to Section 501-14B, Inspection and Verification to continue the diagnosis.

STEERING COLUMN/IGNITION/LIGHTING CONTROL (SCIL) MODULE PARAMETER IDENTIFICATION (PID) INDEX

Display	Description	PID Content
CCNTSCI	Number of Continuous DTCs on SCIL	one count per bit
BOO__SCI	Brake Switch Input	ON OFF
PRK__BRK	Parking Brake Switch Input	ON OFF
TILT	Steering Column Tilt Switch	SHORT UP DOWN OFF
TELESCP	Steering Column Telescope Switch	SHORT IN OUT OFF
TILTPOS	Tilt Position Sensor	SENSED notSEN
TELEPOS	Telescope Position Sensor	SENSED notSEN
TURN__SW	Left and Right Turn Signal Switch	OFF LEFT RIGHT SHORT
LBEAMSW	Low Beam Switch	ON OFF
HBEAMSW	High Beam Switch	ON OFF
PARK__SW	Parking Sw	ON OFF
LIGHTSN	Ambient Light	DAY NIGHT
FLASH	Flash to Pass Switch	ON OFF
FTURN__L	Left and Right Front Turn Lamp	R__OPEN, L__OPEN, L/R__OPEN OK
RTURN__L	Left and Right Rear Turn Lamp	R__OPEN, L__OPEN, L/R__OPEN OK
TAILLMP	Left and Right Tail Lamp	OPEN OK

(Continued)

3 Can be purchased as a separate item.

DIAGNOSIS AND TESTING (Continued)

STEERING COLUMN/IGNITION/LIGHTING CONTROL (SCIL) MODULE PARAMETER IDENTIFICATION (PID) INDEX

Display	Description	PID Content
LOWBEAM	Low Beam Lamp	R__OPEN, L__OPEN, L/R__OPEN OK
AUTOLMP	Autolamp Switch	ON OFF
ALP__IMP	Autolamp Analog Input	0-100%
DOMESW	Dome Lamp Switch	ACTIVE notACT
PANLDIM	Panel Dim Intensity Switch	0-100%
HOOD__SW	Hood Ajar Switch	AJAR CLOSED
DECKLID	Decklid Ajar Switch	AJAR CLOSED
P__DR__SW	Passenger Door Ajar Switch	AJAR CLOSED
IGN__KEY	Ignition Key In/Out	IN OUT
IGN__SCI	Ignition Switch	START RUN OFF ACCSSY
WPPRKSW	Windshield Wiper Park Sense	notPRK PARKED
NUMKEYS	Number of Ignition Key Codes Supported	BCD (valid range 0-16)
DRLKCYL	Door Lock Cylinder	ON OFF
ENABLE	PATS System Status	ON, OFF
FAILSAF	PATS System Status	ON, OFF

STEERING COLUMN/IGNITION/LIGHTING (SCIL) CONTROL MODULE ACTIVE COMMAND INDEX

Active Command	Display	Function
PID Latch	PID LATCH	ON OFF
One Touch Window Dwn and Accy Delay	ACCY RLY	ON OFF
Warning Lamps and Chime	CHIME	ON OFF
	ANTI-THEFT	ON OFF
	AUTOLMP	ON OFF
	HIGH BEAM	ON OFF
Interior Courtesy Lamps	INT LAMPS	ON OFF
	MIRRORLAMP	ON OFF
Decklid Release	RELEASE	ON OFF
Turn Signal and Marker Lamps	LF TURN	ON OFF
	RF TURN	ON OFF
	LR TURN	ON OFF
	RR TURN	ON OFF
	PARKLAMPS	ON OFF
Headlamp Control	LEFT LOW	ON OFF
	RIGHT LOW	ON OFF
	HIGH BEAM	ON OFF

(Continued)

STEERING COLUMN/IGNITION/LIGHTING (SCIL) CONTROL MODULE ACTIVE COMMAND INDEX

Active Command	Display	Function
	DRUN LAMP	ON OFF
	LF CORNER	ON OFF
	RF CORNER	ON OFF
Horn Control	HORN	ON OFF
Backlighting Intensity	INTENSITY	0%-100%
Courtesy Lamp Intensity	INTENSITY	0%-100%
Door Ajar Signal	DOOR AJAR	ON OFF
Transmit Signal Command	TRANSMIT	ON OFF
Brake System	BRK/SHIFT	ON OFF
	PARK BRK	ON OFF
Steering Column Control	TILT UP	ONE SECOND TIME OUT
	TILT DOWN	ONE SECOND TIME OUT
	TELSCP IN	ONE SECOND TIME OUT
	TELSCPOUT	ONE SECOND TIME OUT
Keycode Erase Time Set	MINUTES	8-63 Minutes

DIAGNOSIS AND TESTING (Continued)

Symptom Chart

SYMPTOM CHART

Condition	Possible Source	Action
• No Communication With The Driver Seat Module	• Driver seat module. • Circuitry.	• GO to Pinpoint Test G.
• No Communication With The Passenger Seat Module	• Passenger seat module. • Circuitry.	• GO to Pinpoint Test H.
• No Communication With The Steering Column/Ignition/Lighting Control Module	• Steering column/ignition/lighting control module. • Circuitry.	• GO to Pinpoint Test J.
• The Power Seat Is Inoperative—Driver	• Circuitry. • Damaged front seat track. • Damaged LH seat regulator control switch. • Driver seat module.	• GO to Pinpoint Test K.
• The Power Seat Is Inoperative—Passenger	• Circuitry. • Damaged RH front seat track. • Damaged RH seat regulator control switch. • Passenger seat module.	• GO to Pinpoint Test L.
• The Power Seat Does Not Move Horizontally—Driver	• Circuitry. • Damaged front seat track. • Damaged LH seat regulator control switch. • Driver seat module.	• GO to Pinpoint Test M.
• The Power Seat Does Not Move Horizontally—Passenger	• Circuitry. • Damaged RH front seat track. • Damaged RH seat regulator control switch. • Passenger seat module.	• GO to Pinpoint Test N.
• The Power Seat Does Not Move Vertically—Driver	• Circuitry. • Damaged front seat track. • Damaged LH seat regulator control switch. • Driver seat module.	• GO to Pinpoint Test P.
• The Power Seat Does Not Move Vertically—Passenger	• Circuitry. • Damaged RH front seat track. • Damaged RH seat regulator control switch. • Passenger seat module.	• GO to Pinpoint Test Q.
• The Power Recline Does Not Operate Properly—Drivers	• Circuitry. • Damaged front seat track. • Damaged LH seat regulator control switch. • Driver seat module.	• GO to Pinpoint Test R.
• The Power Recline Does Not Operate Properly—Passenger	• Circuitry. • Damaged RH front seat track. • Damaged RH seat regulator control switch. • Passenger seat module.	• GO to Pinpoint Test S.
• The Memory Seat Does Not Operate Properly	• Circuitry. • Damaged LH front seat track. • Damaged switch. • Driver door module.	• GO to Pinpoint Test T.

DIAGNOSIS AND TESTING (Continued)

SYMPTOM CHART (Continued)

Condition	Possible Source	Action
• Easy Exit/Easy Entry Does Not Operate Properly	• Driver seat module. • Message Center • Circuitry.	• GO to Pinpoint Test U.
• The Autoglide Does Not Operate Properly—Driver	• Circuitry. • Damaged LH front seat track. • Damaged LH seat regulator control switch. • Driver door module. • Steering column/ignition /lighting control module.	• GO to Pinpoint Test V.
• The Autoglide Does Not Operate Properly—Passenger	• Circuitry. • Damaged RH seat track. • Damaged RH seat regulator control switch. • Passenger seat module.	• GO to Pinpoint Test W.
• The Heated Seat Is Inoperative	• Circuitry. • Damaged heater element. • Damaged switch. • Damaged heated seat module.	• GO to Pinpoint Test X.
• The Heated Seats Are Inoperative	• Circuitry. • Damaged switch. • Damaged heated seat module.	• GO to Pinpoint Test Y.
• The Heated Seat Cushion Is Inoperative	• Circuitry. • Damaged switch. • Damaged cushion element.	• GO to Pinpoint Test Z.
• The Power Lumbar Is Inoperative	• Circuitry. • Damaged motor. • Damaged switch.	• GO to Pinpoint Test AA.

Official Published Product Ford Motor Company

Pinpoint Tests

DTC B1248: PASSENGER SEATBACK AUTOGLIDE REARWARD SWITCH CIRCUIT OPEN

TEST CONDITIONS	TEST DETAILS/RESULTS/ACTIONS
B1248-1 CHECK PID AUTOGLD	
2 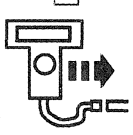 NGS 3 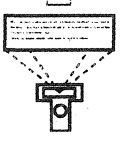 Passenger Seat Module PID AUTOGLD	1 Make sure the passenger seat back is in the full backward position.

(Continued)

DIAGNOSIS AND TESTING (Continued)

DTC B1248: PASSENGER SEATBACK AUTOGLIDE REARWARD SWITCH CIRCUIT OPEN (Continued)

TEST CONDITIONS	TEST DETAILS/RESULTS/ACTIONS
B1248-1 CHECK PID AUTOGLD (Continued)	
	• Does PID AUTOGLD read RWD? → **Yes** GO to **B1248-2**. → **No** GO to **B1248-4**.
B1248-2 CHECK FOR A STUCK SWITCH	
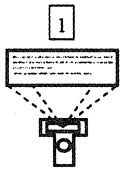 Passenger Seat Module PID AUTOGLD	2 Move the passenger seatback from the full back position to the full forward position while monitoring PID AUTOGLD. • Does PID AUTOGLD change from RWD to FWD? → **Yes** GO to **B1248-3**. → **No** REPLACE the autoglide rearward switch. REPEAT the passenger seat module self-test.
B1248-3 CHECK FOR DTC B1248	
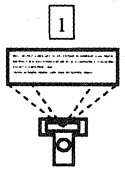 Clear the Passenger Seat Module DTCs 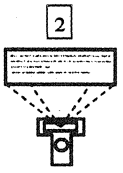 Passenger Seat Module Self-Test	• Is DTC B1248 retrieved? → **Yes** REPLACE the driver seat module. REPEAT the passenger seat module self-test. → **No** The system is operating properly. CHECK for an obstruction or an intermittently sticking switch.

(Continued)

Official Licensed Product
Ford Motor Company

DIAGNOSIS AND TESTING (Continued)

DTC B1248: PASSENGER SEATBACK AUTOGLIDE REARWARD SWITCH CIRCUIT OPEN (Continued)

TEST CONDITIONS	TEST DETAILS/RESULTS/ACTIONS
B1248-4 CHECK THE AUTOGLIDE REARWARD SWITCH	
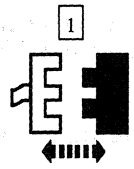 Passenger Seat Autoglide Rearward Switch Connector C329 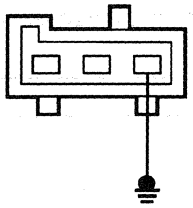 AR0285-A Passenger Seat Module PID AUTOGLD	2 Connect a jumper wire between ground and the autoglide rearward switch Connector C329, Circuit 457 (DB/Y). • Does PID AUTOGLD read RWD? → **Yes** GO to **B1248-5**. → **No** GO to **B1248-6**.

Official Licensed Product
Ford Motor Company

(Continued)

DIAGNOSIS AND TESTING (Continued)

DTC B1248: PASSENGER SEATBACK AUTOGLIDE REARWARD SWITCH CIRCUIT OPEN (Continued)

TEST CONDITIONS	TEST DETAILS/RESULTS/ACTIONS
B1248-5 CHECK CIRCUIT 938 (BK/LG) FOR AN OPEN	
1 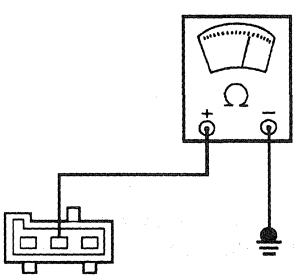 AR0284-A	1 Measure the resistance between the autoglide rearward switch Connector C329, Circuit 938 (BK/LG) and ground. • Is the resistance reading 5 ohms or less? → **Yes** REPLACE the autoglide rearward switch. REPEAT the passenger seat module self-test. → **No** REPAIR Circuit 938 (BK/LG) for an open. REPEAT the passenger seat module self-test.
B1248-6 CHECK CIRCUIT 457 (DB/Y) FOR AN OPEN	
1 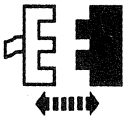 Passenger Seat Module Connector C336 2 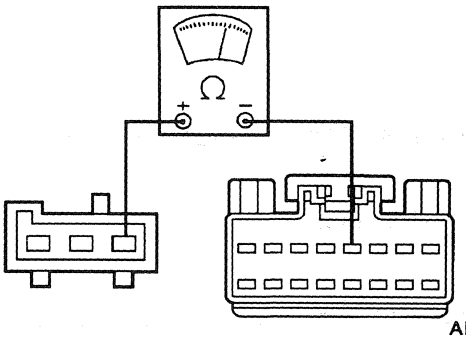 AR0839-A	2 Measure the resistance of Circuit 457 (DB/Y) between the passenger seat module connector Pin C336-5 and the autoglide rearward switch Connector C329. • Is the resistance reading 5 ohms or less? → **Yes** REPLACE the passenger seat module. REPEAT the passenger seat module self-test. → **No** REPAIR Circuit 457 (DB/Y) for an open. REPEAT the passenger seat module self-test.

Official Licensed Product
Ford Motor Company

DIAGNOSIS AND TESTING (Continued)

DTC B1342: ECU DEFECTIVE

TEST CONDITIONS	TEST DETAILS/RESULTS/ACTIONS
B1342-1 CHECK FOR DTC	
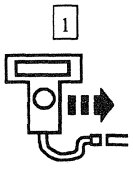 1 NGS 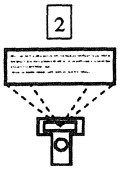 2 Clear the DSM or Passenger Seat Module DTCs 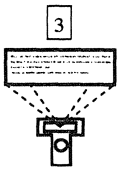 3 DSM or Passenger Seat Module Self Test	• Was DTC B1342 retrieved? → **Yes** REPLACE the seat module. REPEAT the module self-test. → **No** The system is operating properly. REPAIR any remaining DTCs or symptoms.

Official Licensed Product
Ford Motor Company

DIAGNOSIS AND TESTING (Continued)

DTC B1360: IGNITION SWITCH RUN/ACC SWITCH CIRCUIT OPEN

TEST CONDITIONS	TEST DETAILS/RESULTS/ACTIONS
B1360-1 CHECK THE POWER SUPPLY TO FUSE 4 (10A)	
1 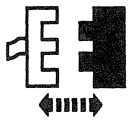 Fuse Junction Panel Fuse 4 (10A) 2 Ignition Switch to ACC 3 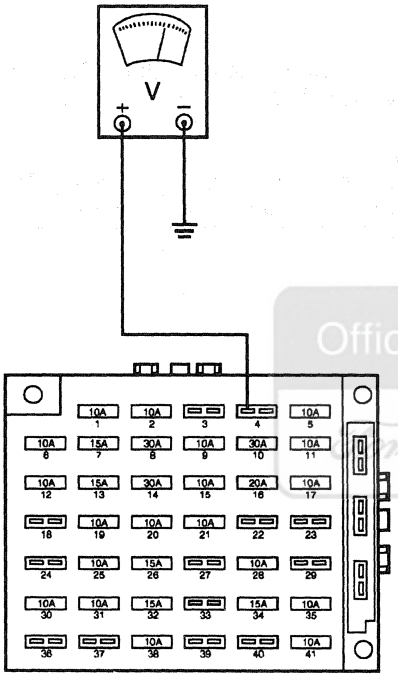 AR0282-A	3 Measure the voltage at the input cavity of Fuse 4 (10A). • Is the voltage reading B+? → **Yes** GO to **B1360-2.** → **No** GO to Section 501-11 for the delayed accessory system diagnosis.

Official Licensed Product Ford Motor Company

(Continued)

DIAGNOSIS AND TESTING (Continued)

DTC B1360: IGNITION SWITCH RUN/ACC SWITCH CIRCUIT OPEN (Continued)

TEST CONDITIONS	TEST DETAILS/RESULTS/ACTIONS
B1360-2 CHECK FUSE 4 (10A)	
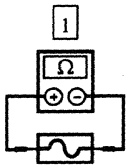 Fuse Junction Panel Fuse 4 (10A)	• Is the fuse OK? → **Yes** GO to **B1360-3**. → **No** REPLACE Fuse 4 (10A). REPEAT the passenger seat module self-test.

(Continued)

Official Licensed Product
Ford Motor Company

DIAGNOSIS AND TESTING (Continued)

DTC B1360: IGNITION SWITCH RUN/ACC SWITCH CIRCUIT OPEN (Continued)

TEST CONDITIONS	TEST DETAILS/RESULTS/ACTIONS
B1360-3 CHECK CIRCUIT 1002 (BK/PK) FOR AN OPEN	
1 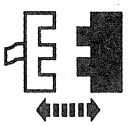 Passenger Seat Module Connector C320 2 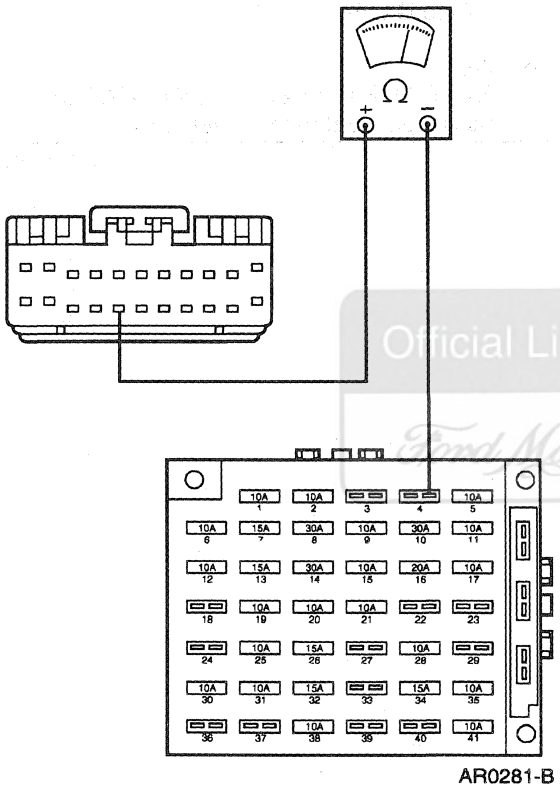 AR0281-B	2 Measure the resistance of Circuit 1002 (BK/PK) between the output cavity of Fuse 4 (10A) and the passenger seat module connector Pin C320-16. • Is the resistance reading 5 ohms or less? → **Yes** REPLACE the passenger seat module. REPEAT the passenger seat module self-test. → **No** REPAIR Circuit 1002 (BK/PK) for an open. REPEAT the passenger seat module self-test.

Official Licensed Product
Ford Motor Company

DTC B1565: DOOR AJAR SIGNAL CIRCUIT SHORT TO BATTERY

TEST CONDITIONS	TEST DETAILS/RESULTS/ACTIONS
B1565-1 CHECK PID DOOR	
	1 Make sure the driver and passenger doors are closed.

(Continued)

DIAGNOSIS AND TESTING (Continued)

DTC B1565: DOOR AJAR SIGNAL CIRCUIT SHORT TO BATTERY (Continued)

TEST CONDITIONS	TEST DETAILS/RESULTS/ACTIONS
B1565-1 CHECK PID DOOR (Continued)	
2 Passenger Seat Module PID DOOR	• Does PID DOOR read CLOSED? → **Yes** GO to **B1565-2.** → **No** GO to **B1565-4.**
B1565-2 CHECK THE DOOR AJAR INPUT	
1 Passenger Seat Module PID DOOR	2 Open and close the driver door, then the passenger door while observing PID DOOR. • Does PID DOOR change from CLOSED to AJAR as each door is opened and closed? → **Yes** GO to **B1565-3.** → **No** GO to Section 417-02, Inspection and Verification to continue the door ajar system diagnosis.

Official Licensed Product
Ford Motor Company

(Continued)

DIAGNOSIS AND TESTING (Continued)

DTC B1565: DOOR AJAR SIGNAL CIRCUIT SHORT TO BATTERY (Continued)

TEST CONDITIONS	TEST DETAILS/RESULTS/ACTIONS
B1565-3 CHECK FOR DTC B1565	
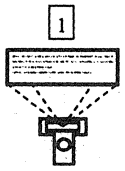 Passenger Seat Module Self-Test	• Is DTC B1565 retrieved? → **Yes** REPLACE the passenger seat module. REPEAT the passenger seat module self-test. → **No** The system is operating properly at this time.
B1565-4 CHECK THE STEERING COLUMN/IGNITION/LIGHTING CONTROL MODULE DTCS	
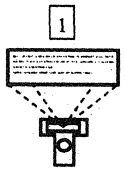 Steering Column/Ignition/Lighting Control Module Self-Test	• Are DTCs B1566 or U1199 retrieved? → **Yes** GO to Section 417-02, Inspection and Verification to continue the diagnosis. → **No** GO to **B1565-5**.
B1565-5 CHECK FOR A SHORT TO B+	
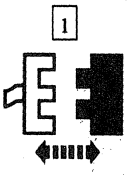 Steering Column/Ignition/Lighting Control Module Connector C287 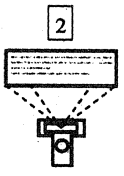 Passenger Seat Module PID Door	• Does PID DOOR read AJAR? → **Yes** GO to **B1565-6**. → **No** GO to Section 417-02, Inspection and Verification to continue the diagnosis.

Official Licensed Product
Ford Motor Company

(Continued)

DIAGNOSIS AND TESTING (Continued)

DTC B1565: DOOR AJAR SIGNAL CIRCUIT SHORT TO BATTERY (Continued)

TEST CONDITIONS	TEST DETAILS/RESULTS/ACTIONS
B1565-6 CHECK CIRCUIT 127 (BK/LB) FOR A SHORT TO B+	
1 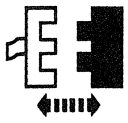 Passenger Seat Module Connector C320 2 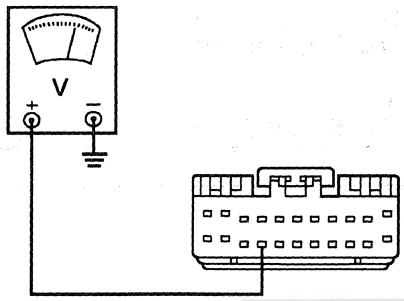 AR0280-B	2 Measure the voltage at the passenger seat module connector Pin C320-15, Circuit 127 (BK/LB). • Is the voltage reading B+? → **Yes** REPAIR Circuit 127 (BK/LB) for a short to B+. REPEAT the passenger seat module self-test. → **No** REPLACE the passenger seat module. REPEAT the passenger seat module self-test.

Official Licensed Product
Ford Motor Company

DTC B1676: BATTERY VOLTAGE OUT OF RANGE

TEST CONDITIONS	TEST DETAILS/RESULTS/ACTIONS
B1676-1 CHECK THE VOLTAGE	
2 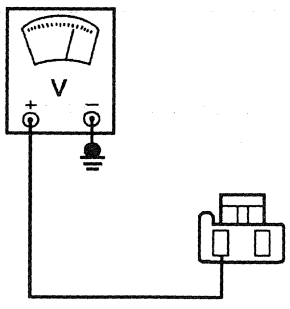 AR0066-A	1 Disconnect the DSM Connector C362 or passenger seat module Connector C364. 2 Measure the voltage at the DSM connector Pin C362-1, Circuit 490 (R) or the passenger seat module connector Pin C364-1, Circuit 517 (BK/W). • Is the voltage reading between 11.5 volts and 16 volts? → **Yes** CLEAR the DTC. REPEAT the module self test. If DTC B1676 is retrieved, REPLACE the driver seat module or passenger seat module. REPEAT the module self-test. → **No** REFER to Section 414-00 for battery and charging system repair.

DIAGNOSIS AND TESTING (Continued)

DTC B1950: SEAT REAR UP/DOWN POTENTIOMETER FEEDBACK CIRCUIT FAILURE

TEST CONDITIONS	TEST DETAILS/RESULTS/ACTIONS
B1950-1 CHECK FOR OTHER DTCs	
1 DSM Self-Test	• Are DTCs B1954, B1958 and B1962 also retrieved? → **Yes** GO to Pinpoint Test F. → **No** GO to **B1950-2**.
B1950-2 CHECK SEAT OPERATION	
1 Select DSM ACTIVE COMMAND-DRIVER SEAT CONTROL 2 Trigger REAR UP then REAR DWN ON	• Does the driver seat raise and lower as commanded? → **Yes** GO to **B1950-3**. → **No** GO to Pinpoint Test P.
B1950-3 CHECK PID SREARMT	
2 Trigger REAR UP then REAR DWN ON	1 In the DSM Active Command screen, select and monitor PID SREARMT.

Official Licensed Product
Ford Motor Company

(Continued)

DIAGNOSIS AND TESTING (Continued)

DTC B1950: SEAT REAR UP/DOWN POTENTIOMETER FEEDBACK CIRCUIT FAILURE (Continued)

TEST CONDITIONS	TEST DETAILS/RESULTS/ACTIONS
B1950-3 CHECK PID SREARMT (Continued)	
	• Does PID SREARMT change from NOTSEN to SENSED when the rear of seat is commanded UP or DOWN? → **Yes** CLEAR the DSM DTCs. REPEAT the DSM self-test. If DTC B1950 is retrieved, REPLACE the driver seat module. → **No** GO to **B1950-4**.
B1950-4 CHECK FOR A SHORT TO B+	
1 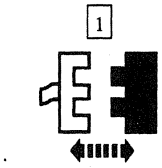 DSM Connector C355 2 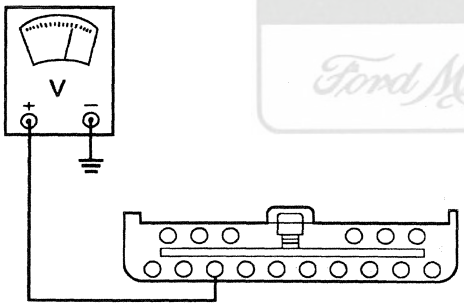 AR0067-B	2 Measure the voltage at the DSM connector Pin C355-9, Circuit 444 (LG/BK). • Is the voltage reading B+? → **Yes** GO to **B1950-5**. → **No** GO to **B1950-6**.

Official Licensed Product
Ford Motor Company

(Continued)

DIAGNOSIS AND TESTING (Continued)

DTC B1950: SEAT REAR UP/DOWN POTENTIOMETER FEEDBACK CIRCUIT FAILURE (Continued)

TEST CONDITIONS	TEST DETAILS/RESULTS/ACTIONS
B1950-5 CHECK CIRCUIT 444 (LG/BK) FOR A SHORT TO B+	
1 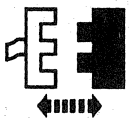 Driver Seat Rear Motor Potentiometer Connector C355 2 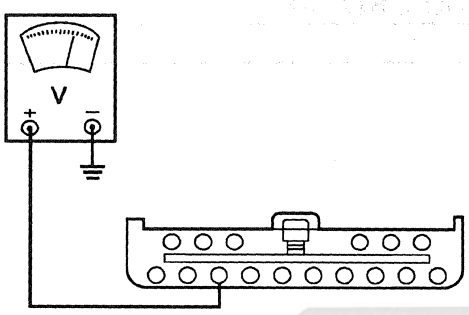 AR0067-B	2 Measure the voltage at the DSM connector Pin C355-9, Circuit 444 (LG/BK). • Is the voltage reading B+? → **Yes** REPAIR Circuit 444 (LG/BK) for a short to B+. REPEAT the DSM self-test. → **No** REPLACE the driver seat track assembly. REPEAT the DSM self-test.
B1950-6 CHECK FOR A SHORT TO GROUND	
1 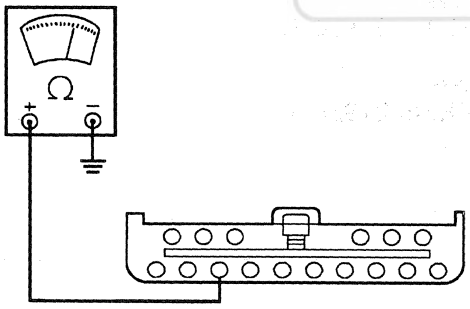 AR0064-B	1 Measure the resistance between the DSM connector Pin C355-9, Circuit 444 (LG/BK) and ground. • Is the resistance reading 10 K ohms or less? → **Yes** GO to **B1950-7**. → **No** GO to **B1950-8**.

Official Licensed Product
Ford Motor Company

(Continued)

DIAGNOSIS AND TESTING (Continued)

DTC B1950: SEAT REAR UP/DOWN POTENTIOMETER FEEDBACK CIRCUIT FAILURE (Continued)

TEST CONDITIONS	TEST DETAILS/RESULTS/ACTIONS
B1950-7 CHECK CIRCUIT 444 (LG/BK) FOR A SHORT TO GROUND	
1 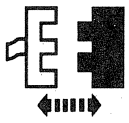 Driver Seat Rear Motor Potentiometer Connector C355 2 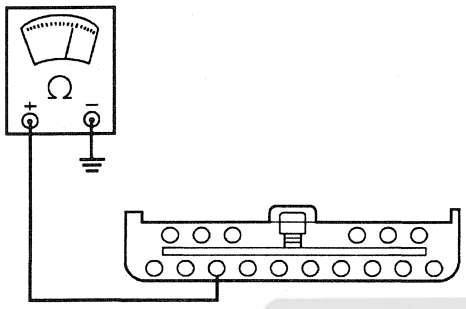 AR0064-B	2 Measure the resistance between the DSM connector Pin C355-9, Circuit 444 (LG/BK) and ground. • Is the resistance reading 10 K ohms or less? → **Yes** REPAIR Circuit 444 (LG/BK) for a short to ground. REPEAT the DSM self-test. → **No** REPLACE the driver seat track assembly. REPEAT the DSM self-test.
B1950-8 CHECK CIRCUIT 444 (LG/BK) FOR AN OPEN	
1 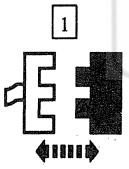 Driver Seat Rear Motor Potentiometer Connector C355 2 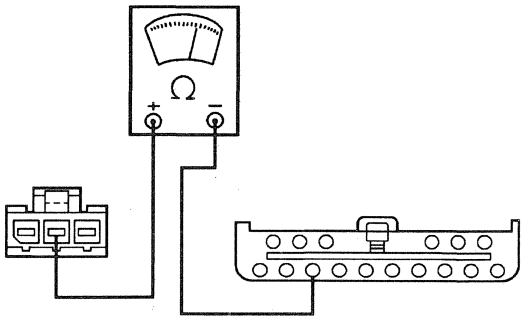 AR0063-B	2 Measure the resistance of Circuit 444 (LG/BK) between the DSM connector Pin C355-9 and the driver seat rear potentiometer Connector C324. • Is the resistance reading 5 ohms or less? → **Yes** GO to **B1950-9**. → **No** REPAIR Circuit 444 (LG/BK) for an open. REPEAT the DSM self-test.

Official Licensed Product
Ford Motor Company

(Continued)

DIAGNOSIS AND TESTING (Continued)

DTC B1950: SEAT REAR UP/DOWN POTENTIOMETER FEEDBACK CIRCUIT FAILURE (Continued)

TEST CONDITIONS	TEST DETAILS/RESULTS/ACTIONS
B1950-9 CHECK SEAT REAR POTENTIOMETER FEED CIRCUIT	
1 Driver Seat Rear Motor Potentiometer Connector C355 2 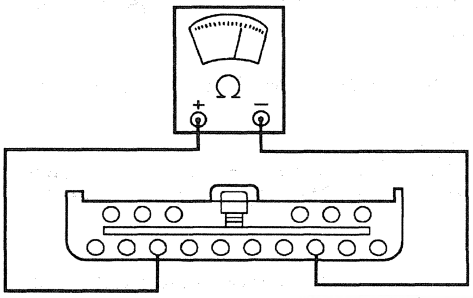 AR0062-B	2 Measure the resistance between the DSM connector Pin C355-9, Circuit 444 (LG/BK) and Pin C355-14, Circuit 446 (O/W). • Is the resistance reading between 2 K ohms and 7.5 K ohms? → **Yes** GO to **B1950-10.** → **No** REPLACE the driver seat track assembly. REPEAT the DSM self-test.
B1950-10 CHECK THE SEAT REAR POTENTIOMETER RETURN CIRCUIT	
1 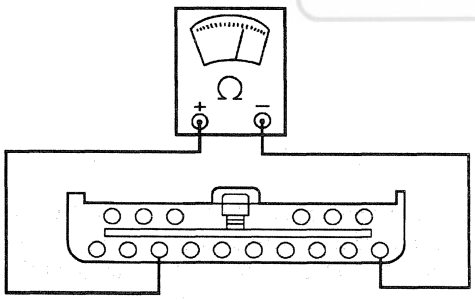 AR0300-B	1 Measure the resistance between the DSM connector Pin C355-9, Circuit 444 (LG/BK) and Pin C355-16, Circuit 447 (O/R). • Is the resistance reading between 2 K ohms and 7.5 K ohms? → **Yes** REPLACE the driver seat module. REPEAT the DSM self-test. → **No** REPLACE the driver seat track assembly. REPEAT the DSM self-test.

Official Licensed Product
Ford Motor Company

DIAGNOSIS AND TESTING (Continued)

DTC B1954: SEAT FRONT UP/DOWN POTENTIOMETER FEEDBACK CIRCUIT FAILURE

TEST CONDITIONS	TEST DETAILS/RESULTS/ACTIONS
B1954-1 CHECK FOR OTHER DTCs	
1 DSM Self-Test	• Are DTCs B1950, B1958 and B1962 also retrieved? → **Yes** GO to Pinpoint Test F. → **No** GO to **B1954-2.**
B1954-2 CHECK SEAT OPERATION	
1 Select DSM ACTIVE COMMAND-DRIVER SEAT CONTROL 2 Trigger FRONT UP then FRONT DWN ON	• Does the driver seat front raise and lower as commanded? → **Yes** GO to **B1954-3.** → **No** GO to Pinpoint Test P.
B1954-3 CHECK PID SFNT__MT	
2 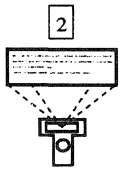 Trigger FRONT UP then FRONT DWN ON	1 In the DSM Active Command screen, select and monitor PID SFNT__MT.

Official Licensed Product
Ford Motor Company

(Continued)

DIAGNOSIS AND TESTING (Continued)

DTC B1954: SEAT FRONT UP/DOWN POTENTIOMETER FEEDBACK CIRCUIT FAILURE (Continued)

TEST CONDITIONS	TEST DETAILS/RESULTS/ACTIONS
B1954-3 CHECK PID SFNT__MT (Continued)	
	• Does PID SFNT__MT change from NOTSEN to SENSED when the seat front is commanded UP or DOWN? → **Yes** CLEAR the DSM DTCs. REPEAT the DSM self-test. If DTC B1954 is retrieved, REPLACE the driver seat module. → **No** GO to **B1954-4**.
B1954-4 CHECK FOR A SHORT TO B+	
1 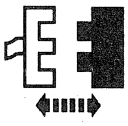 DSM Connector C355 2 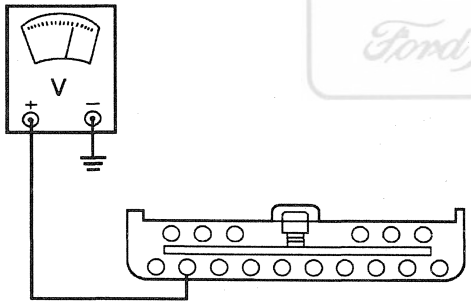 AR0299-B	2 Measure the voltage at the DSM connector Pin C355-8, Circuit 443 (LG/R). • Is the voltage reading B+? → **Yes** GO to **B1954-5**. → **No** GO to **B1954-6**.

Official Licensed Product
Ford Motor Company

(Continued)

DIAGNOSIS AND TESTING (Continued)

DTC B1954: SEAT FRONT UP/DOWN POTENTIOMETER FEEDBACK CIRCUIT FAILURE (Continued)

TEST CONDITIONS	TEST DETAILS/RESULTS/ACTIONS
B1954-5 CHECK CIRCUIT 443 (LG/R) FOR A SHORT TO B+	
1 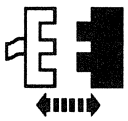 Driver Seat Front Motor Potentiometer Connector C323 2 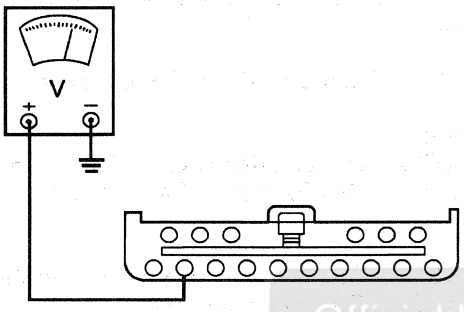 AR0299-B	2 Measure the voltage at the DSM connector Pin C355-8, Circuit 443 (LG/R). • Is the voltage reading B+? → **Yes** REPAIR Circuit 443 (LG/R) for a short to B+. REPEAT the DSM self-test. → **No** REPLACE the driver seat track assembly. REPEAT the DSM self-test.
B1954-6 CHECK FOR A SHORT TO GROUND	
1 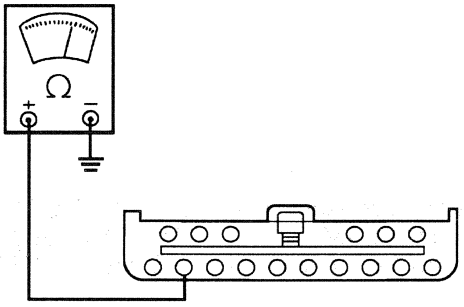 AR0298-B	1 Measure the resistance between the DSM connector Pin C355-8, Circuit 443 (LG/R) and ground. • Is the resistance reading 10 K ohms or less? → **Yes** GO to **B1954-7**. → **No** GO to **B1954-8**.

Official Licensed Product
Ford Motor Company

(Continued)

DIAGNOSIS AND TESTING (Continued)

DTC B1954: SEAT FRONT UP/DOWN POTENTIOMETER FEEDBACK CIRCUIT FAILURE (Continued)

TEST CONDITIONS	TEST DETAILS/RESULTS/ACTIONS
B1954-7 CHECK CIRCUIT 443 (LG/R) FOR A SHORT TO GROUND	
1 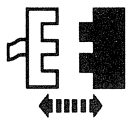 Driver Seat Front Motor Potentiometer Connector C323 2 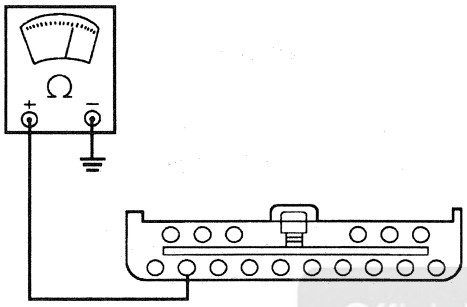 AR0298-B	2 Measure the resistance between the DSM connector Pin C355-8, Circuit 443 (LG/R) and ground. • Is the resistance reading 10 K ohms or less? → **Yes** REPAIR Circuit 443 (LG/R) for a short to ground. REPEAT the DSM self-test. → **No** REPLACE the driver seat track assembly. REPEAT the DSM self-test.
B1954-8 CHECK CIRCUIT 443 (LG/R) FOR AN OPEN	
1 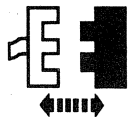 Driver Seat Front Motor Potentiometer Connector C323 2 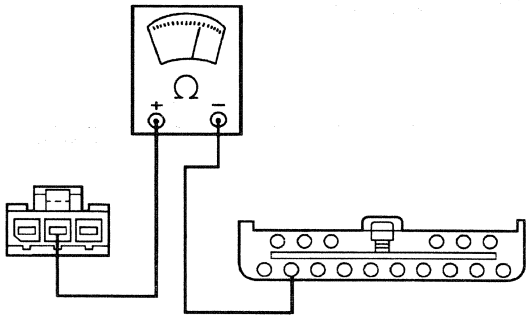 AR0077-B	2 Measure the resistance of Circuit 443 (LG/R) between the DSM connector Pin C355-8 and the driver seat front potentiometer Connector C323. • Is the resistance reading 5 ohms or less? → **Yes** GO to **B1954-9**. → **No** REPAIR Circuit 443 (LG/R) for an open. REPEAT the DSM self-test.

Official Licensed Product Ford Motor Company

(Continued)

DIAGNOSIS AND TESTING (Continued)

DTC B1954: SEAT FRONT UP/DOWN POTENTIOMETER FEEDBACK CIRCUIT FAILURE (Continued)

TEST CONDITIONS	TEST DETAILS/RESULTS/ACTIONS
B1954-9 CHECK THE SEAT FRONT POTENTIOMETER FEED CIRCUIT	
1 Driver Seat Front Motor Potentiometer Connector C323 2 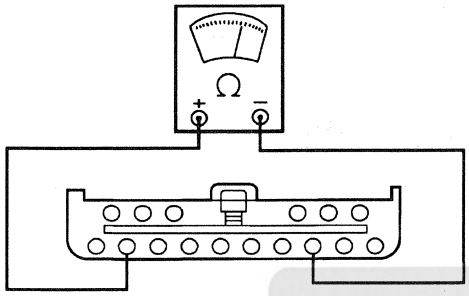 AR0297-B	2 Measure the resistance between the DSM connector Pin C355-8, Circuit 443 (LG/R) and Pin C355-14, Circuit 446 (O/W). • Is the resistance reading between 2 K ohms and 7.5 K ohms? → **Yes** GO to **B1954-10**. → **No** REPLACE the driver seat track assembly. REPEAT the DSM self-test.
B1954-10 CHECK THE SEAT FRONT POTENTIOMETER RETURN CIRCUIT	
1 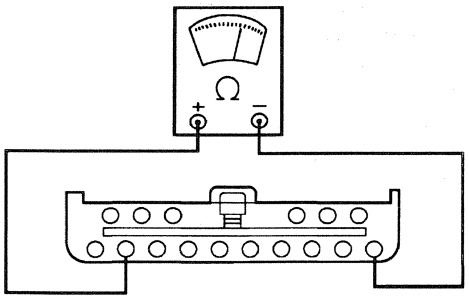 AR0296-B	1 Measure the resistance between the DSM connector Pin C355-8, Circuit 443 (LG/R) and Pin C355-16, Circuit 447 (O/R). • Is the resistance reading between 2 K ohms and 7.5 K ohms? → **Yes** REPLACE the driver seat module. REPEAT the DSM self-test. → **No** REPLACE the driver seat track assembly. REPEAT the DSM self-test.

Official Licensed Product
Ford Motor Company

DIAGNOSIS AND TESTING (Continued)

DTC B1958: SEAT RECLINE FORWARD/BACKWARD POTENTIOMETER FEEDBACK CIRCUIT FAILURE

TEST CONDITIONS	TEST DETAILS/RESULTS/ACTIONS
B1958-1 CHECK FOR OTHER DTCs	
1 DSM Self-Test	• Are DTCs B1950, B1954 and B1962 also retrieved? → **Yes** GO to Pinpoint Test F. → **No** GO to **B1958-2**.
B1958-2 CHECK THE SEAT OPERATION	
1 Select the DSM ACTIVE COMMAND-DRIVERS SEAT CONTROL 2 Trigger RECL FWD then RECL BWD ON	• Does the driver seat back recline forward and backward as commanded? → **Yes** GO to **B1958-3**. → **No** GO to Pinpoint Test R.
B1958-3 CHECK PID SRCL__MT	
2 Trigger RECL FWD then RECL BWD ON	1 In the DSM Active Command screen, select and monitor PID SRCL__MT.

(Continued)

Official Licensed Product Ford Motor Company

DIAGNOSIS AND TESTING (Continued)

DTC B1958: SEAT RECLINE FORWARD/BACKWARD POTENTIOMETER FEEDBACK CIRCUIT FAILURE (Continued)

TEST CONDITIONS	TEST DETAILS/RESULTS/ACTIONS
B1958-3 CHECK PID SRCL__MT (Continued)	
	• Does PID SRCL__MT change from NOTSEN to SENSED when the seat back is commanded FORWARD or BACKWARD? → **Yes** CLEAR the DSM DTCs. REPEAT the DSM self-test. If DTC B1958 is retrieved, REPLACE the driver seat module. → **No** GO to **B1958-4**.
B1958-4 CHECK FOR A SHORT TO B+	
1 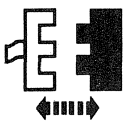 DSM Connector C355 2 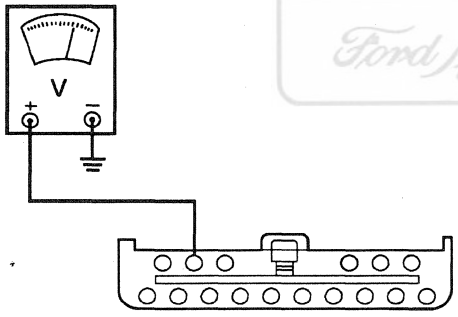 AR0290-B	2 Measure the voltage at the DSM connector Pin C355-2, Circuit 445 (O/LB). • Is the voltage reading B+? → **Yes** GO to **B1958-5**. → **No** GO to **B1958-6**.

Official Licensed Product
Ford Motor Company®

(Continued)

DIAGNOSIS AND TESTING (Continued)

DTC B1958: SEAT RECLINE FORWARD/BACKWARD POTENTIOMETER FEEDBACK CIRCUIT FAILURE (Continued)

TEST CONDITIONS	TEST DETAILS/RESULTS/ACTIONS
B1958-5 CHECK CIRCUIT 445 (O/LB) FOR A SHORT TO B+	
1 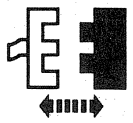 Driver Seat Recliner Motor Potentiometer Connector C326 2 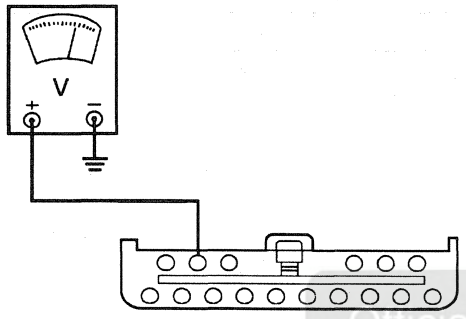 AR0290-B	2 Measure the voltage at the DSM connector Pin C355-2, Circuit 445 (O/LB). • Is the voltage reading B+? → **Yes** REPAIR Circuit 445 (O/LB) for a short to B+. REPEAT the DSM self-test. → **No** REPLACE the driver front seat back latch. REPEAT the DSM self-test.
B1958-6 CHECK FOR A SHORT TO GROUND	
1 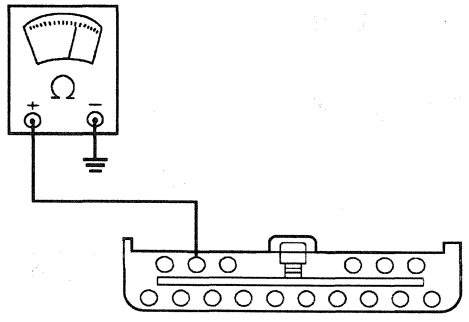 AR0289-B	1 Measure the resistance between the DSM connector Pin C355-2, Circuit 445 (O/LB) and ground. • Is the resistance reading 10 K ohms or less? → **Yes** GO to **B1958-7**. → **No** GO to **B1958-8**.

Official Licensed Product
Ford Motor Company

(Continued)

DIAGNOSIS AND TESTING (Continued)

DTC B1958: SEAT RECLINE FORWARD/BACKWARD POTENTIOMETER FEEDBACK CIRCUIT FAILURE (Continued)

TEST CONDITIONS	TEST DETAILS/RESULTS/ACTIONS
B1958-7 CHECK CIRCUIT 445 (O/LB) FOR A SHORT TO GROUND	
1 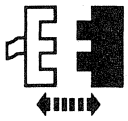 Driver Seat Recliner Motor Potentiometer Connector C326 2 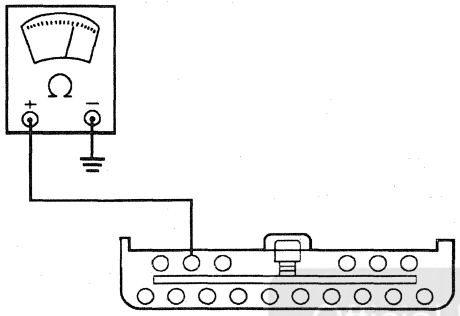 AR0289-B	2 Measure the resistance between the DSM connector Pin C355-2, Circuit 445 (O/LB) and ground. • Is the resistance reading 10 K ohms or less? → **Yes** REPAIR Circuit 445 (O/LB) for a short to ground. REPEAT the DSM self-test. → **No** REPLACE the driver front seat back latch. REPEAT the DSM self-test.
B1958-8 CHECK CIRCUIT 445 (O/LB) FOR AN OPEN	
1 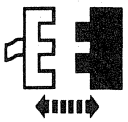 Driver Seat Recliner Motor Potentiometer Connector C326 2 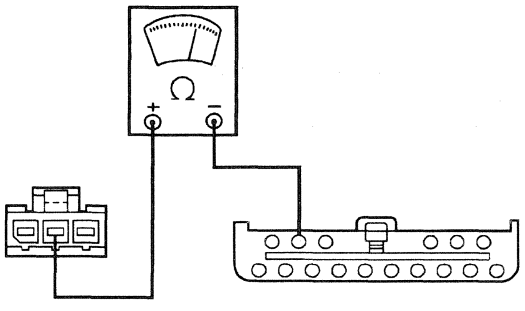 AR0288-B	2 Measure the resistance of Circuit 445 (O/LB) between the DSM connector Pin C355-2 and the driver seat horizontal motor potentiometer connector C326. • Is the resistance reading 5 ohms or less? → **Yes** GO to **B1958-9**. → **No** REPAIR Circuit 445 (O/LB) for an open. REPEAT the DSM self-test.

Official Licensed Product
Ford Motor Company

(Continued)

DIAGNOSIS AND TESTING (Continued)

DTC B1958: SEAT RECLINE FORWARD/BACKWARD POTENTIOMETER FEEDBACK CIRCUIT FAILURE (Continued)

TEST CONDITIONS	TEST DETAILS/RESULTS/ACTIONS
B1958-9 CHECK THE SEAT RECLINER MOTOR POTENTIOMETER FEED CIRCUIT	
1 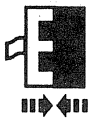 Driver Seat Recliner Motor Potentiometer Connector C326 2 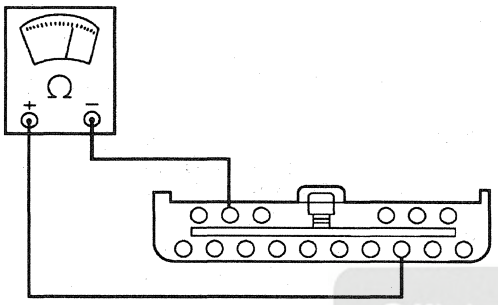 AR0287-B	2 Measure the resistance between the DSM connector Pin C355-2, Circuit 445 (O/LB) and Pin C355-14, Circuit 446 (O/W). • Is the resistance reading between 2 K ohms and 7.5 K ohms? → **Yes** GO to **B1958-10**. → **No** REPLACE the driver front seat back latch. REPEAT the DSM self-test.
B1958-10 CHECK THE SEAT RECLINER MOTOR POTENTIOMETER RETURN CIRCUIT	
1 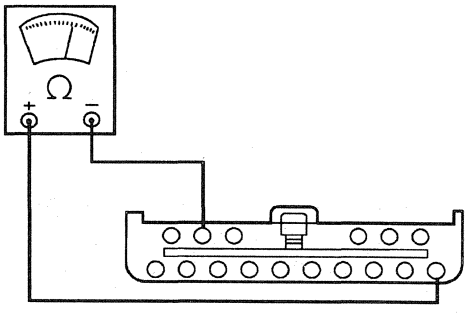 AR0286-B	1 Measure the resistance between the DSM connector Pin C355-2, Circuit 445 (O/LB) and Pin C355-16, Circuit 447 (O/R). • Is the resistance reading between 2 K ohms and 7.5 K ohms? → **Yes** REPLACE the driver seat module. REPEAT the DSM self-test. → **No** REPLACE the driver front seat back latch . REPEAT the DSM self-test.

Official Licensed Product Ford Motor Company

DIAGNOSIS AND TESTING (Continued)

DSM DTC B1962: SEAT HORIZONTAL FORWARD/BACKWARD POTENTIOMETER FEEDBACK CIRCUIT FAILURE

TEST CONDITIONS	TEST DETAILS/RESULTS/ACTIONS
DB1962-1 CHECK FOR OTHER DTCs	
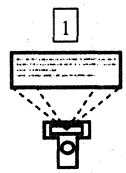 1 DSM Self-Test	• Are DTCs B1950, B1954 and B1958 also retrieved? → **Yes** GO to Pinpoint Test F. → **No** GO to **DB1962-2**.
DB1962-2 CHECK SEAT OPERATION	
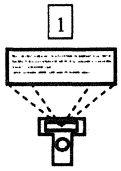 1 Select the DSM ACTIVE COMMAND-DRIVER SEAT CONTROL 2 Trigger HORZ FWD then HORZ BWD ON	• Does the driver seat move forward and backward as commanded? → **Yes** GO to **DB1962-3**. → **No** GO to Pinpoint Test M.
DB1962-3 CHECK PID SFWD__MT	
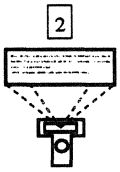 2 Trigger HORZ FWD then HORZ BWD ON	1 In the DSM Active Command screen, select and monitor PID SFWD__MT.

Official Licensed Product Ford Motor Company

(Continued)

DIAGNOSIS AND TESTING (Continued)

DSM DTC B1962: SEAT HORIZONTAL FORWARD/BACKWARD POTENTIOMETER FEEDBACK CIRCUIT FAILURE (Continued)

TEST CONDITIONS	TEST DETAILS/RESULTS/ACTIONS
DB1962-3 CHECK PID SFWD__MT (Continued)	
	• Does PID SFWD__MT change from NOTSEN to SENSED when the seat is commanded FORWARD and BACKWARD? → **Yes** CLEAR the DSM DTCs. REPEAT the DSM self-test. If DTC B1962 is retrieved, REPLACE the driver seat module. → **No** GO to **DB1962-4**.
DB1962-4 CHECK FOR A SHORT TO B+	
1 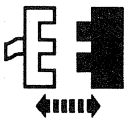 DSM Connector C355 2 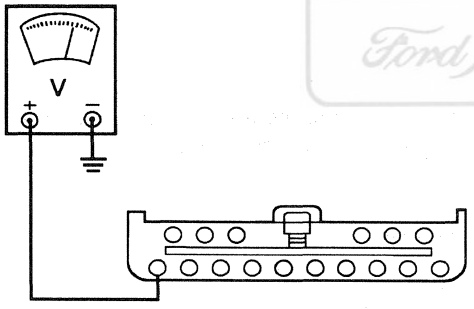 AR0295-B	2 Measure the voltage at the DSM connector Pin C355-7, Circuit 442 (LG/O) • Is the voltage reading B+? → **Yes** GO to **DB1962-5**. → **No** GO to **DB1962-6**.

Official Licensed Product
Ford Motor Company®

(Continued)

DIAGNOSIS AND TESTING (Continued)

DSM DTC B1962: SEAT HORIZONTAL FORWARD/BACKWARD POTENTIOMETER FEEDBACK CIRCUIT FAILURE (Continued)

TEST CONDITIONS	TEST DETAILS/RESULTS/ACTIONS
DB1962-5 CHECK CIRCUIT 442 (LG/O) FOR A SHORT TO B+	
1 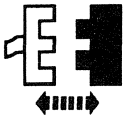 Driver Seat Horizontal Motor Potentiometer Connector C325 2 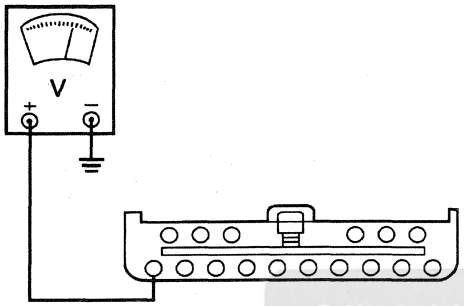 AR0295-B	2 Measure the voltage at the DSM connector Pin C355-7, Circuit 442 (LG/O). • Is the voltage reading B+? → **Yes** REPAIR Circuit 442 (LG/O) for a short to B+. REPEAT the DSM self-test. → **No** REPLACE the driver seat track assembly. REPEAT the DSM self-test.
DB1962-6 CHECK FOR A SHORT TO GROUND	
1 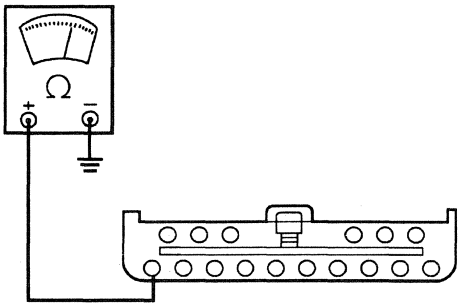 AR0294-B	1 Measure the resistance between the DSM connector Pin C355-7, Circuit 442 (LG/O) and ground. • Is the resistance reading 10 K ohms or less? → **Yes** GO to **DB1962-7**. → **No** GO to **DB1962-8**.

Official Licensed Product
Ford Motor Company

(Continued)

DIAGNOSIS AND TESTING (Continued)

DSM DTC B1962: SEAT HORIZONTAL FORWARD/BACKWARD POTENTIOMETER FEEDBACK CIRCUIT FAILURE (Continued)

TEST CONDITIONS	TEST DETAILS/RESULTS/ACTIONS
DB1962-7 CHECK CIRCUIT 442 (LG/O) FOR A SHORT TO GROUND	
1 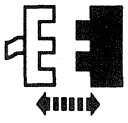 Driver Seat Horizontal Motor Potentiometer Connector C325 2 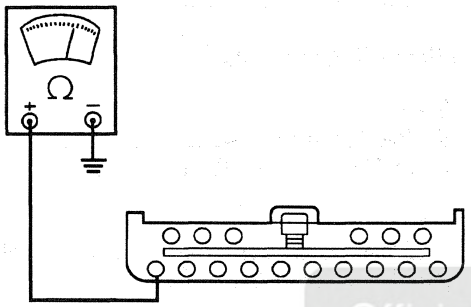 AR0294-B	2 Measure the resistance between the DSM connector Pin C355-7, Circuit 442 (LG/O) and ground. • Is the resistance reading 10 K ohms or less? → **Yes** REPAIR Circuit 442 (LG/O) for a short to ground. REPEAT the DSM self-test. → **No** REPLACE the driver seat track assembly. REPEAT the DSM self-test.
DB1962-8 CHECK CIRCUIT 442 (LG/O) FOR AN OPEN	
1 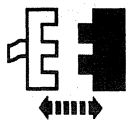 Driver Seat Horizontal Motor Potentiometer Connector C325 2 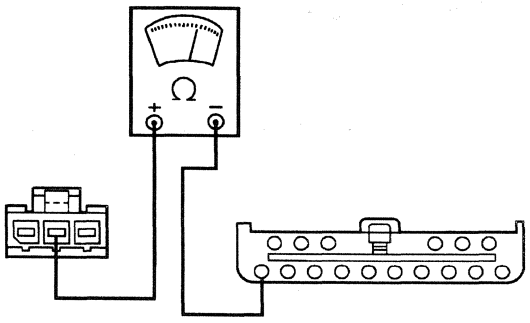 AR0293-B	2 Measure the resistance of Circuit 442 (LG/O) between the DSM connector Pin C355-7 and driver seat horizontal motor potentiometer Connector C325. • Is the resistance reading 5 ohms or less? → **Yes** GO to **DB1962-9**. → **No** REPAIR Circuit 442 (LG/O) for an open. REPEAT the DSM self-test.

Official Licensed Product
Ford Motor Company

(Continued)

DIAGNOSIS AND TESTING (Continued)

DSM DTC B1962: SEAT HORIZONTAL FORWARD/BACKWARD POTENTIOMETER FEEDBACK CIRCUIT FAILURE (Continued)

TEST CONDITIONS	TEST DETAILS/RESULTS/ACTIONS
DB1962-9 CHECK THE SEAT HORIZONTAL MOTOR POTENTIOMETER FEED CIRCUIT	
1 Driver Seat Horizontal Motor Potentiometer Connector C325 2 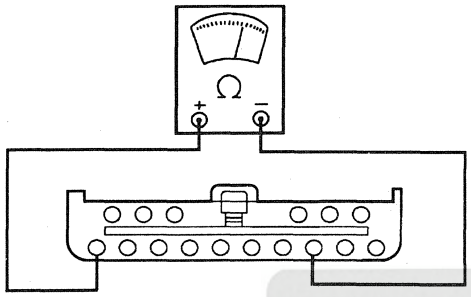 AR0292-B	2 Measure the resistance between the DSM connector Pin C355-7, Circuit 442 (LG/O) and Pin C355-14, Circuit 446 (O/W). • Is the resistance reading between 2 K ohms and 7.5 K ohms? → **Yes** GO to **DB1962-10**. → **No** REPLACE the driver seat track assembly. REPEAT the DSM self-test.
DB1962-10 CHECK THE SEAT HORIZONTAL MOTOR POTENTIOMETER RETURN CIRCUIT	
1 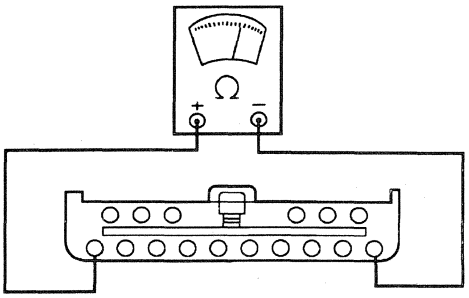 AR0291-B	1 Measure the resistance between the DSM connector Pin C355-7, Circuit 442 (LG/O) and Pin C355-16, Circuit 447 (O/R). • Is the resistance reading between 2 K ohms and 7.5 K ohms? → **Yes** REPLACE the driver seat module. REPEAT the DSM self-test. → **No** REPLACE the driver seat track assembly. REPEAT the DSM self-test.

Official Licensed Product
Ford Motor Company

DIAGNOSIS AND TESTING (Continued)

PSM DTC B1962: PASSENGER SEAT HORIZONTAL FORWARD/REARWARD POTENTIOMETER FEEDBACK CIRCUIT FAILURE

TEST CONDITIONS	TEST DETAILS/RESULTS/ACTIONS
B1962-1 CHECK SEAT OPERATION	
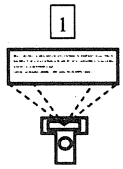 Select the Passenger Seat Module ACTIVE COMMAND-PASSENGER SEAT CONTROL 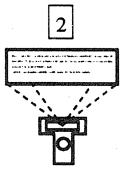 Trigger HORZ FWD then HORZ BWD ON	• Does the passenger seat move forward and backward as commanded? → **Yes** GO to **PB1962-2**. → **No** GO to Pinpoint Test N.
B1962-2 CHECK PID SFNTPOS	
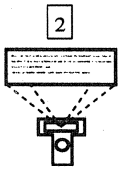 Trigger HORZ FWD then HORZ BWD ON	1 In the passenger seat module Active Command screen, select and monitor PID SFNTPOS. • Does PID SFNTPOS change from NOTSEN to SENSED when the seat is commanded FORWARD and BACKWARD? → **Yes** CLEAR the passenger seat module DTCs. REPEAT the passenger seat module self-test. If DTC B1962 is retrieved, REPLACE the passenger seat module. → **No** GO to **PB1962-3**.

(Continued)

Official Licensed Product
Ford Motor Company

DIAGNOSIS AND TESTING (Continued)

PSM DTC B1962: PASSENGER SEAT HORIZONTAL FORWARD/REARWARD POTENTIOMETER FEEDBACK CIRCUIT FAILURE (Continued)

TEST CONDITIONS	TEST DETAILS/RESULTS/ACTIONS
B1962-3 CHECK FOR A SHORT TO B+	
1 Passenger Seat Module Connector C357 2 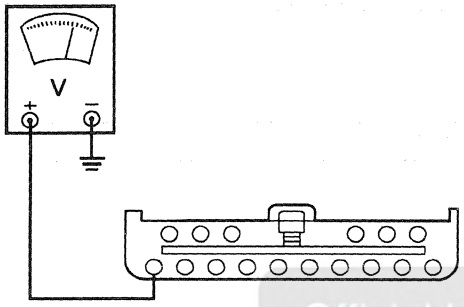 AR0295-B	2 Measure the voltage at the passenger seat module connector Pin C357-7, Circuit 442 (LG/O). • Is the voltage reading B+? → **Yes** GO to **PB1962-4**. → **No** GO to **PB1962-5**.
B1962-4 CHECK CIRCUIT 442 (LG/O) FOR A SHORT TO B+	
1 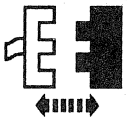 Passenger Seat Horizontal Motor Potentiometer Connector C343 2 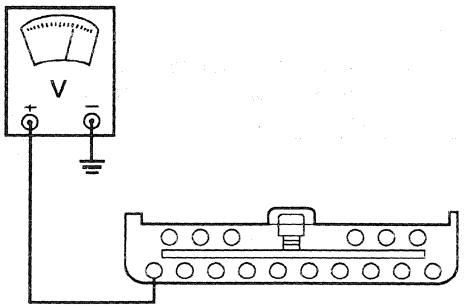 AR0295-B	2 Measure the voltage at the passenger seat module connector Pin C357-7, Circuit 442 (LG/O). • Is the voltage reading B+? → **Yes** REPAIR Circuit 442 (LG/O) for a short to B+. REPEAT the passenger seat module self-test. → **No** REPLACE the passenger seat track assembly. REPEAT the passenger seat module self-test.

Official Licensed Product
Ford Motor Company

(Continued)

DIAGNOSIS AND TESTING (Continued)

PSM DTC B1962: PASSENGER SEAT HORIZONTAL FORWARD/REARWARD POTENTIOMETER FEEDBACK CIRCUIT FAILURE (Continued)

TEST CONDITIONS	TEST DETAILS/RESULTS/ACTIONS
B1962-5 CHECK FOR A SHORT TO GROUND	
1 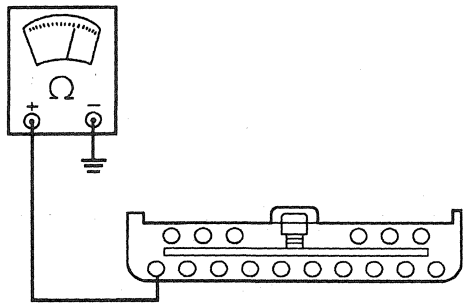 AR0294-B	1 Measure the resistance between the passenger seat module connector Pin C357-7, Circuit 442 (LG/O) and ground. • Is the resistance reading 10 K ohms or less? → **Yes** GO to **PB1962-6**. → **No** GO to **PB1962-7**.
B1962-6 CHECK CIRCUIT 442 (LG/O) FOR A SHORT TO GROUND	
1 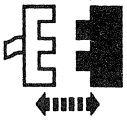 Passenger Seat Horizontal Motor Potentiometer Connector C343 2 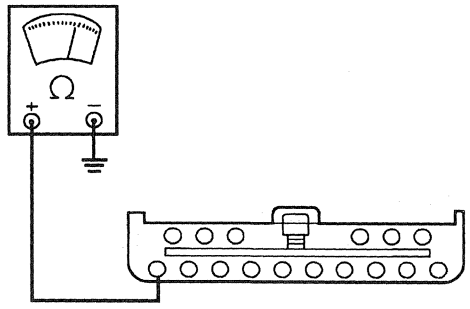 AR0294-B	2 Measure the resistance between the passenger seat module connector Pin C357-7, Circuit 442 (LG/O) and ground. • Is the resistance reading 10 K ohms or less? → **Yes** REPAIR Circuit 442 (LG/O) for a short to ground. REPEAT the passenger seat module self-test. → **No** REPLACE the passenger seat track assembly. REPEAT the passenger seat module self-test.

Official Licensed Product
Ford Motor Company

(Continued)

DIAGNOSIS AND TESTING (Continued)

PSM DTC B1962: PASSENGER SEAT HORIZONTAL FORWARD/REARWARD POTENTIOMETER FEEDBACK CIRCUIT FAILURE (Continued)

TEST CONDITIONS	TEST DETAILS/RESULTS/ACTIONS
B1962-7 CHECK CIRCUIT 442 (LG/O) FOR AN OPEN	
1 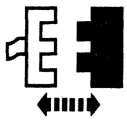 Passenger Seat Horizontal Motor Potentiometer Connector C343 2 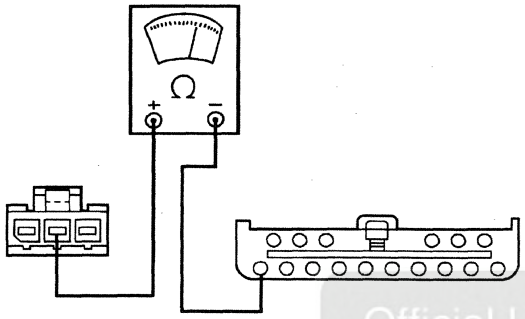 AR0293-B	2 Measure the resistance of Circuit 442 (LG/O) between the passenger seat module connector Pin C357-7 and passenger seat horizontal motor potentiometer Connector C343. • Is the resistance reading 5 ohms or less? → **Yes** GO to **PB1962-8**. → **No** REPAIR Circuit 442 (LG/O) for an open. REPEAT the passenger seat module self-test.
B1962-8 CHECK THE SEAT HORIZONTAL MOTOR POTENTIOMETER FEED CIRCUIT	
1 Passenger Seat Horizontal Motor Potentiometer Connector C343 2 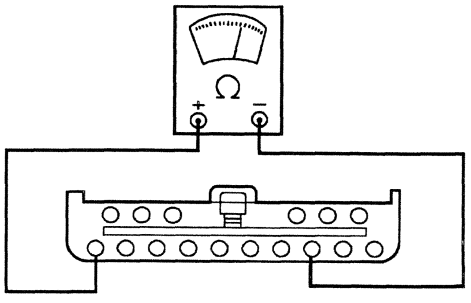 AR0292-B	2 Measure the resistance between the passenger seat module connector Pin C357-7, Circuit 442 (LG/O) and Pin C357-14, Circuit 446 (O/W). • Is the resistance reading between 2 K ohms and 7.5 K ohms? → **Yes** GO to **PB1962-9**. → **No** REPLACE the passenger seat track assembly. REPEAT the passenger seat module self-test.

Official Licensed Product Ford Motor Company

(Continued)

DIAGNOSIS AND TESTING (Continued)

PSM DTC B1962: PASSENGER SEAT HORIZONTAL FORWARD/REARWARD POTENTIOMETER FEEDBACK CIRCUIT FAILURE (Continued)

TEST CONDITIONS	TEST DETAILS/RESULTS/ACTIONS
B1962-9 CHECK THE SEAT HORIZONTAL MOTOR POTENTIOMETER RETURN CIRCUIT	
1 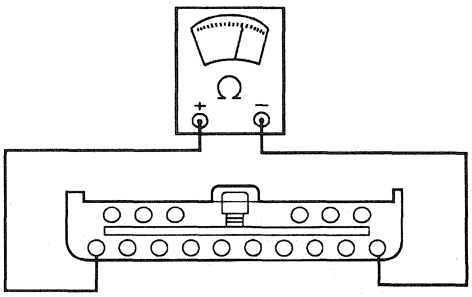 AR0291-B	1 Measure the resistance between the passenger seat module connector Pin C357-7, Circuit 442 (LG/O) and Pin C357-16, Circuit 447 (O/R). • Is the resistance reading between 2 K ohms and 7.5 K ohms? → **Yes** REPLACE the passenger seat module. REPEAT the passenger seat module self-test. → **No** REPLACE the passenger seat track assembly. REPEAT the passenger seat module self-test.

DTC B1986: DRIVERS SEAT SEATBACK AUTOGLIDE REARWARD SWITCH CIRCUIT FAILURE

TEST CONDITIONS	TEST DETAILS/RESULTS/ACTIONS
B1986-1 CHECK PID AGLIDER	
1 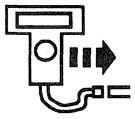 NGS 2 Read DSM PID AGLIDER	• Does PID AGLIDER read ACTIVE? → **Yes** GO to **B1986-2**. → **No** GO to **B1986-4**.

Official Licensed Product
Ford Motor Company

(Continued)

DIAGNOSIS AND TESTING (Continued)

DTC B1986: DRIVERS SEAT SEATBACK AUTOGLIDE REARWARD SWITCH CIRCUIT FAILURE (Continued)

TEST CONDITIONS	TEST DETAILS/RESULTS/ACTIONS
B1986-2 CHECK FOR A STUCK SWITCH	
1 Monitor DSM PID AGLIDER	2 Move the seatback from the full back position to the full forward position while monitoring PID AGLIDER. • Does PID AGLIDER change from ACTIVE to notACT? → **Yes** GO to **B1986-3**. → **No** REPLACE the autoglide rearward switch. REPEAT the DSM self-test.
B1986-3 CHECK FOR DTC B1986	
1 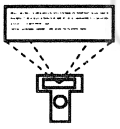 DSM Self-Test	• Is DTC B1986 retrieved? → **Yes** REPLACE the driver seat module. REPEAT the DSM self-test. → **No** The system is operating properly. CHECK for an obstruction or an intermittently sticking switch.

Official Licensed Product Ford Motor Company

(Continued)

DIAGNOSIS AND TESTING (Continued)

DTC B1986: DRIVERS SEAT SEATBACK AUTOGLIDE REARWARD SWITCH CIRCUIT FAILURE (Continued)

TEST CONDITIONS	TEST DETAILS/RESULTS/ACTIONS
B1986-4 CHECK THE DRIVER SEAT AUTOGLIDE REARWARD SWITCH	
1 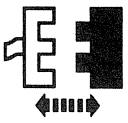 Driver Seat Autoglide Rearward Switch Connector C354	
2 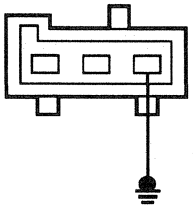 AR0285-A	2 Connect a jumper wire to ground and connect the other end to autoglide rearward switch Connector C354, Circuit 457 (DB/Y).
3 DSM PID AGLIDER	• Does PID AGLIDER read ACTIVE? → **Yes** GO to **B1986-5**. → **No** GO to **B1986-6**.

Official Licensed Product
Ford Motor Company

(Continued)

DIAGNOSIS AND TESTING (Continued)

DTC B1986: DRIVERS SEAT SEATBACK AUTOGLIDE REARWARD SWITCH CIRCUIT FAILURE (Continued)

TEST CONDITIONS	TEST DETAILS/RESULTS/ACTIONS
B1986-5 CHECK CIRCUIT 875 (BK/LB) FOR AN OPEN	
1 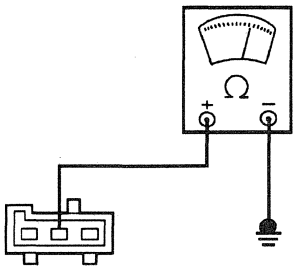 AR0284-A	1 Measure the resistance between the autoglide rearward switch connector C354, Circuit 875 (BK/LB). • Is the resistance 5 ohms or less? → **Yes** REPLACE the driver seat autoglide rearward switch. REPEAT the DSM self-test. → **No** REPAIR Circuit 875 (BK/LB) for an open. REPEAT the DSM self-test.
B1986-6 CHECK CIRCUIT 457 (DB/Y) FOR AN OPEN	
1 DSM Connector C350 2 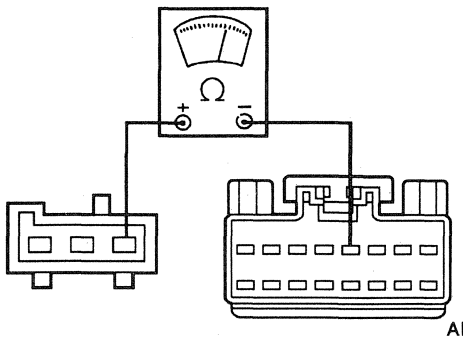 AR0839-A	2 Measure the resistance of Circuit 457 (DB/Y) between the DSM connector Pin C350-5 and the driver seat autoglide rearward switch Connector C354. • Is the resistance 5 ohms or less? → **Yes** REPLACE the driver seat module. REPEAT the DSM self-test. → **No** REPAIR Circuit 457 (DB/Y) for an open. REPEAT the DSM self-test.

Official Licensed Product
Ford Motor Company

DIAGNOSIS AND TESTING (Continued)

PINPOINT TEST A: DTC B1597, DTC B1599: SEATBACK AUTOGLIDE FORWARD SWITCH CIRCUIT SHORT TO GROUND

TEST CONDITIONS	TEST DETAILS/RESULTS/ACTIONS
A1 CHECK PID	
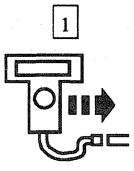 NGS 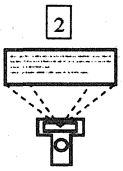 DSM PID AGLIDEF or Passenger Seat Module PID AUTOGLD	• Does DSM PID AGLIDEF read ACTIVE or passenger seat module PID AUTOGLD read FWD? → **Yes** GO to **A4.** → **No** GO to **A 2.**
A2 CHECK FOR STUCK SWITCH	
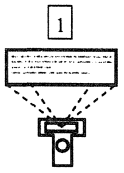 DSM PID AGLIDEF or Passenger Seat Module PID AUTOGLD	[2] Move the seatback from the full back position to the full forward position while monitoring PID. • Does DSM PID AGLIDEF change from notACT to ACTIVE or passenger seat module PID AUTOGLD change from RWD to FWD? → **Yes** GO to **A3.** → **No** REPLACE the autoglide forward switch. REPEAT the module self-test.

Official Licensed Product
Ford Motor Company

(Continued)

DIAGNOSIS AND TESTING (Continued)

PINPOINT TEST A: DTC B1597, DTC B1599: SEATBACK AUTOGLIDE FORWARD SWITCH CIRCUIT SHORT TO GROUND (Continued)

TEST CONDITIONS	TEST DETAILS/RESULTS/ACTIONS
A3 CHECK FOR DTC	
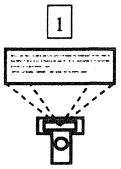 DSM Self Test or Passenger Seat Module Self-Test	• Is DTC B1597 retrieved from the DSM or DTC B1599 retrieved from the passenger seat module? → **Yes** REPLACE the suspect module. REPEAT the module self-test. → **No** The system is operating properly. Check for an obstruction or an intermittently sticking switch.
A4 CHECK THE AUTOGLIDE FORWARD SWITCH	
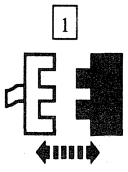 Autoglide Forward Switch Connector C354, Driver Seat or C329 Passenger Seat DSM PID AGLIDEF or Passenger Seat Module PID AUTOGLD	• Does DSM PID AGLIDEF read ACTIVE or passenger seat module PID AUTOGLD read FWD? → **Yes** GO to **A5** for the DSM or GO to **A6** for the passenger seat module. → **No** REPLACE the autoglide forward switch. REPEAT the module self-test.

Official Licensed Product Ford Motor Company

(Continued)

DIAGNOSIS AND TESTING (Continued)

PINPOINT TEST A: DTC B1597, DTC B1599: SEATBACK AUTOGLIDE FORWARD SWITCH CIRCUIT SHORT TO GROUND (Continued)

TEST CONDITIONS	TEST DETAILS/RESULTS/ACTIONS
A5 CHECK CIRCUIT 456 (DG/O) FOR A SHORT TO GROUND	
1 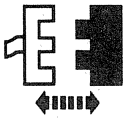 DSM Connector C350 2 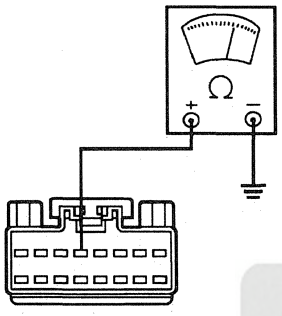 AR0076-B	2 Measure the resistance between the DSM connector Pin C350-4, Circuit 456 (DG/O) and ground. • Is the resistance reading 10 K ohms or less? → **Yes** REPAIR Circuit 456 (DG/O) for a short to ground. REPEAT the DSM self-test. → **No** REPLACE the driver seat module. REPEAT the DSM self-test.
A6 CHECK FOR A SHORT TO GROUND	
1 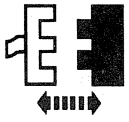 Passenger Seat Module Connector C336 2 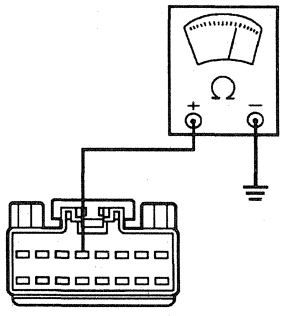 AR0076-B	2 Measure the resistance between the passenger seat module connector Pin C336-4, Circuit 456 (DG/O) and ground. • Is the resistance reading 10 K ohms or less? → **Yes** REPAIR Circuit 456 (DG/O) for a short to ground. REPEAT the passenger seat module self-test. → **No** REPLACE the passenger seat module. REPEAT the passenger seat module self-test.

Official Licensed Product
Ford Motor Company

DIAGNOSIS AND TESTING (Continued)

PINPOINT TEST B: DTC B1703, DTC B1707, DTC B1974, DTC B1975: RECLINE FORWARD/REARWARD SWITCH CIRCUIT SHORT TO BATTERY

TEST CONDITIONS	TEST DETAILS/RESULTS/ACTIONS
B1 CHECK PID SRCL__SW	
1 NGS 2 Select PID SRCL__SW	3 Compare PID SRCL__SW value: DTC / PID Value B1703 — SHORT or FWD B1707 — SHORT or RWD B1974 — SHORT or FWD B1975 — SHORT or RWD • Does PID SRCL__SW read as indicated for the DTC being tested? → **Yes** GO to **B4.** → **No** GO to **B2.**
B2 CHECK FOR A STICKING SWITCH	
1 Monitor PID SRCL__SW 2 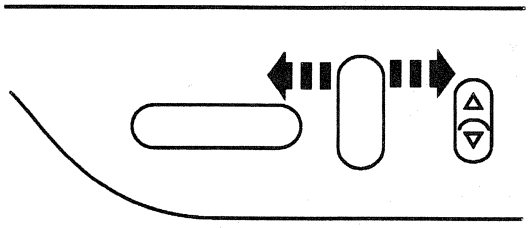 AR0092-A	2 Press the seat recline switch to the FORWARD, then REARWARD positions while monitoring PID SRCL__SW. • Does PID SRCL__SW change from FWD to RWD as the recliner switch is pressed FORWARD and REARWARD? → **Yes** GO to **B3.** → **No** REPLACE the seat recliner switch. REPEAT the appropriate module self-test.

(Continued)

Official Licensed Product
Ford Motor Company

DIAGNOSIS AND TESTING (Continued)

PINPOINT TEST B: DTC B1703, DTC B1707, DTC B1974, DTC B1975: RECLINE FORWARD/REARWARD SWITCH CIRCUIT SHORT TO BATTERY (Continued)

TEST CONDITIONS	TEST DETAILS/RESULTS/ACTIONS
B3 CHECK FOR DTC	
1 Repeat the DSM or the Passenger Seat Module Self-Test	• Is the same DTC retrieved again? → **Yes** REPLACE the suspect seat module. REPEAT the appropriate module self-test. → **No** The system is operating properly. Check for an obstruction or an intermittently sticking switch.
B4 CHECK THE SEAT RECLINE SWITCH	
1 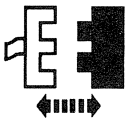 Seat Regulator Control Switch Connector C367 Driver or Connector C368 Passenger 2 Read Seat Module PID SRCL__SW	3 Compare PID SRCL__SW value: • Does PID SRCL__SW read as indicated for the DTC being tested? → **Yes** GO to **B5** for the DSM or **B6** for the passenger seat module. → **No** REPLACE the seat regulator control switch. REPEAT the appropriate module self-test.

DTC	PID Value
B1703	SHORT or FWD
B1707	SHORT or RWD
B1974	SHORT or FWD
B1975	SHORT or RWD

Official Licensed Product Ford Motor Company

(Continued)

DIAGNOSIS AND TESTING (Continued)

PINPOINT TEST B: DTC B1703, DTC B1707, DTC B1974, DTC B1975: RECLINE FORWARD/REARWARD SWITCH CIRCUIT SHORT TO BATTERY (Continued)

TEST CONDITIONS	TEST DETAILS/RESULTS/ACTIONS
B5 CHECK CIRCUIT 918 (GY) OR CIRCUIT 919 (GY/BK) FOR A SHORT TO B+	
1 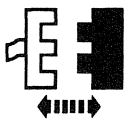 DSM Connector C350 2 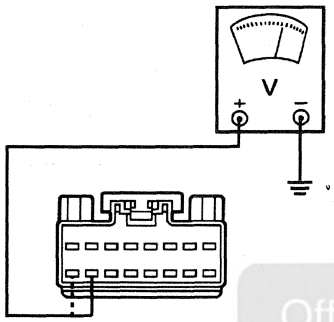 AR0898-A	2 Measure the voltage at the DSM connector Pin C350-10, Circuit 918 (GY) for DTC B1703 or Pin C350-9, Circuit 919 (GY/BK) for DTC B1707. • Is the voltage reading B+? → **Yes** REPAIR Circuit 918 (GY) or Circuit 919 (GY/BK) for a short to B+. REPEAT the DSM self-test. → **No** REPLACE the driver seat module. REPEAT the DSM self-test.
B6 CHECK CIRCUIT FOR A SHORT TO B+	
1 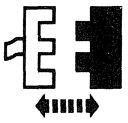 Passenger Seat Module Connector C336 2 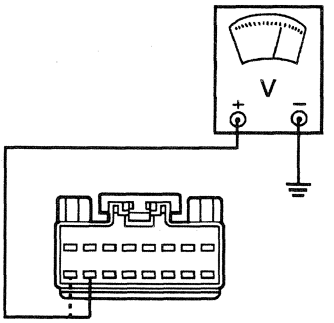 AR0898-A	2 Measure the voltage at the passenger seat module connector Pin C336-10, Circuit 918 (GY) for DTC B1974 or Pin C336-9, Circuit 919 (GY/BK) for DTC B1975. • Is the voltage reading B+? → **Yes** REPAIR Circuit 918 (GY) or Circuit 919 (GY/BK) for a short to B+. REPEAT the passenger seat module self-test. → **No** REPLACE the driver seat module. REPEAT the passenger seat module self-test.

Official Licensed Product
Ford Motor Company

DIAGNOSIS AND TESTING (Continued)

PINPOINT TEST C: DTC B1711, DTC B1715, DTC B1977, DTC B1978: SEAT FRONT UP/DOWN SWITCH CIRCUIT SHORT TO BATTERY

TEST CONDITIONS	TEST DETAILS/RESULTS/ACTIONS
C1 CHECK PID SFNT__SW	
1 NGS 2 Read PID SFNT__SW	3 Compare PID SFNT__SW value: DTC / PID Content B1711 — SHORT or UP B1715 — SHORT or DOWN B1977 — SHORT or UP B1978 — SHORT or DOWN • Does PID SFNT__SW read as indicated for the DTC being tested? → **Yes** GO to **C4**. → **No** GO to **C2**.
C2 CHECK FOR A STICKING SWITCH	
1 Monitor PID SFNT__SW 2 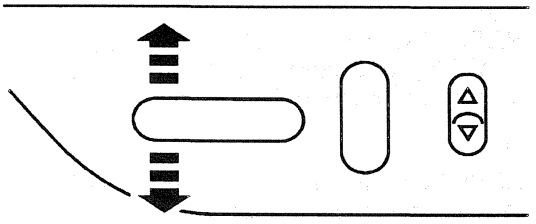 AR0098-A	2 Press the seat regulator control switch to the front UP then front DOWN position while monitoring PID SFNT__SW. • Does PID SFNT__SW change from UP to DOWN as the seat regulator control switch is pressed to front UP and front DOWN positions? → **Yes** GO to **C3**. → **No** REPLACE the seat regulator control switch. REPEAT the appropriate module self-test.

Official Licensed Product
Ford Motor Company

(Continued)

DIAGNOSIS AND TESTING (Continued)

PINPOINT TEST C: DTC B1711, DTC B1715, DTC B1977, DTC B1978: SEAT FRONT UP/DOWN SWITCH CIRCUIT SHORT TO BATTERY (Continued)

TEST CONDITIONS	TEST DETAILS/RESULTS/ACTIONS
C3 CHECK FOR DTC	
1 Repeat the DSM or Passenger Seat Module Self-Test	• Is the same DTC retrieved? → **Yes** REPLACE the suspect seat module. REPEAT the appropriate module self-test. → **No** The system is operating properly. CHECK for an obstruction or an intermittently sticking switch.
C4 CHECK THE SEAT REGULATOR CONTROL SWITCH	
1 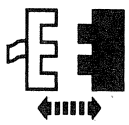 Seat Regulator Control Switch Connector C367 Driver or Connector C368 Passenger 2 Read PID SFNT__SW	3 Compare PID SFNT__SW value: **DTC** / **PID Content** B1711 — SHORT or UP B1715 — SHORT or DOWN B1977 — SHORT or UP B1978 — SHORT or DOWN • Does PID SFNT__SW read as indicated for the DTC being tested? → **Yes** GO to **C5** for the DSM or GO to **C6** for the passenger seat module. → **No** REPLACE the seat regulator control switch. REPEAT the appropriate module self-test.

Official Licensed Product Ford Motor Company

(Continued)

DIAGNOSIS AND TESTING (Continued)

PINPOINT TEST C: DTC B1711, DTC B1715, DTC B1977, DTC B1978: SEAT FRONT UP/DOWN SWITCH CIRCUIT SHORT TO BATTERY (Continued)

TEST CONDITIONS	TEST DETAILS/RESULTS/ACTIONS
C5 CHECK CIRCUIT 985 (R/LB) OR CIRCUIT 984 (Y/LB) FOR A SHORT TO B+	
1 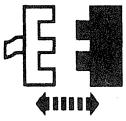 DSM Connector C350 2 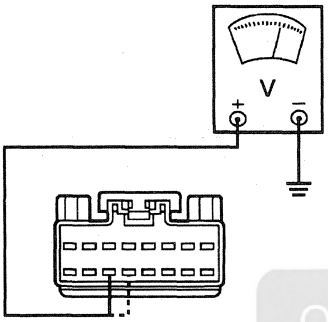 AR0900-A	2 Measure the voltage at the DSM connector Pin C350-11, Circuit 985 (R/LB) for DTC B1711 or Pin C350-12, Circuit 984 (Y/LB) for DTC B1715. • Is the voltage reading B+? → **Yes** REPAIR Circuit 985 (R/LB) or Circuit 984 (Y/LB) for a short to B+. REPEAT the DSM self-test. → **No** REPLACE the driver seat module. REPEAT the DSM self-test.
C6 CHECK CIRCUIT FOR A SHORT TO B+	
1 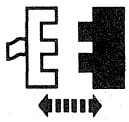 Passenger Seat Module Connector C336 2 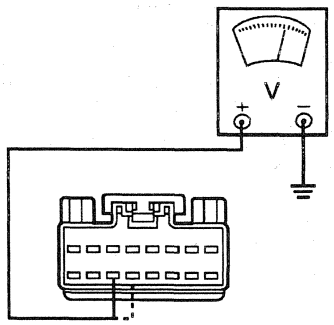 AR0900-A	2 Measure the voltage at the passenger seat module connector Pin C336-11, Circuit 985 (R/LB) for DTC B1977 or Pin C336-12, Circuit 984 (Y/LB) for DTC B1978. • Is the voltage reading B+? → **Yes** REPAIR Circuit 985 (R/LB) or Circuit 984 (Y/LB) for a short to B+. REPEAT the passenger seat module self-test. → **No** REPLACE the passenger seat module. REPEAT the passenger seat module self-test.

Official Licensed Product
Ford Motor Company

DIAGNOSIS AND TESTING (Continued)

PINPOINT TEST D: DTC B1719, DTC B1723, DTC B1976, DTC B1979: SEAT FORWARD/REARWARD SWITCH CIRCUIT SHORT TO BATTERY

TEST CONDITIONS	TEST DETAILS/RESULTS/ACTIONS
D1 CHECK PID SFWD__SW	
1 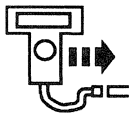 NGS 2 Read PID SFWD__SW	3 Compare PID SFWD__SW value: DTC / PID Value B1719 — SHORT or FWD B1723 — SHORT or RWD B1976 — SHORT or FWD B1979 — SHORT or RWD • Does PID SFWD__SW read as indicated for the DTC being tested? → **Yes** GO to **D4**. → **No** GO to **D2**.
D2 CHECK FOR A STICKING SWITCH	
1 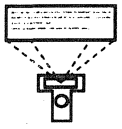 Monitor PID SFWD__SW 2 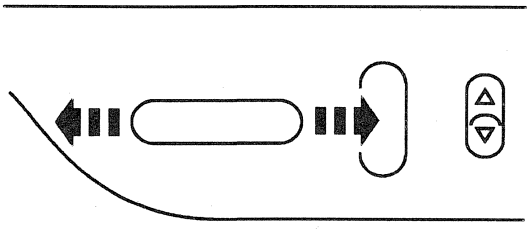 AR0301-A	2 Press the seat regulator control switch to the FORWARD, then REARWARD positions while monitoring PID SFWD__SW. • Does PID SFWD__SW change from FWD to RWD as the seat regulator control switch is pressed FORWARD and REARWARD? → **Yes** GO to **D3**. → **No** REPLACE the seat regulator control switch. REPEAT the appropriate module self-test.

Official Licensed Product
Ford Motor Company

(Continued)

DIAGNOSIS AND TESTING (Continued)

PINPOINT TEST D: DTC B1719, DTC B1723, DTC B1976, DTC B1979: SEAT FORWARD/REARWARD SWITCH CIRCUIT SHORT TO BATTERY (Continued)

TEST CONDITIONS	TEST DETAILS/RESULTS/ACTIONS
D3 CHECK FOR DTC	
1 Perform the DSM or Passenger Seat Module Self-Test	• Is the same DTC retrieved? → **Yes** REPLACE the suspect seat module. REPEAT the appropriate module self-test. → **No** The system is operating properly. CHECK for an obstruction or an intermittently sticking switch.
D4 CHECK THE SEAT REGULATOR CONTROL SWITCH	
1 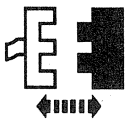 Seat Regulator Control Switch Connector C367 Driver or Connector C368 Passenger 2 Read PID SFWD__SW	3 Compare PID SFWD__SW value: **DTC** / **PID Value** B1719 — SHORT or FWD B1723 — SHORT or RWD B1976 — SHORT or FWD B1979 — SHORT or RWD • Does PID SFWD__SW read as indicated for the DTC being tested? → **Yes** GO to **D5** for the DSM or GO to **D6** for passenger seat module. → **No** REPLACE the seat regulator control switch. REPEAT the appropriate module self-test.

Official Licensed Product Ford Motor Company

(Continued)

DIAGNOSIS AND TESTING (Continued)

PINPOINT TEST D: DTC B1719, DTC B1723, DTC B1976, DTC B1979: SEAT FORWARD/REARWARD SWITCH CIRCUIT SHORT TO BATTERY (Continued)

TEST CONDITIONS	TEST DETAILS/RESULTS/ACTIONS
D5 CHECK CIRCUIT 987 (R/W) OR CIRCUIT 986 (Y/W) FOR A SHORT TO B+	
1 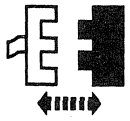 DSM Connector C350 2 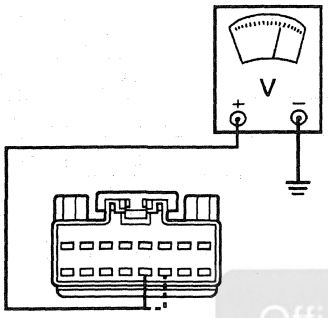 AR0902-A	2 Measure the voltage at the DSM connector Pin C350-13, Circuit 987 (R/W) for DTC B1719 or Pin C350-14, Circuit 986 (Y/W) for DTC B1723. • Is the voltage reading B+? → **Yes** REPAIR Circuit 987 (R/W) or Circuit 986 (Y/W) for a short to B+. REPEAT the DSM self-test. → **No** REPLACE the driver seat module. REPEAT the DSM self-test.
D6 CHECK CIRCUIT FOR A SHORT TO B+	
1 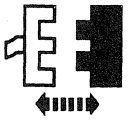 Passenger Seat Module Connector C336 2 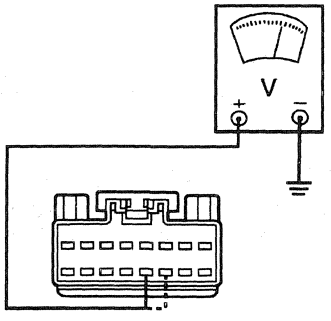 AR0902-A	2 Measure the voltage at the passenger seat module connector Pin C336-14, Circuit 986 (Y/W) for DTC B1979 or Pin C336-13, Circuit 987 (R/W) for DTC B1976. • Is the voltage reading B+? → **Yes** REPAIR Circuit 986 (Y/W) or Circuit 987 (R/W) for a short to B+. REPEAT the passenger seat module self-test. → **No** REPLACE the passenger seat module. REPEAT the passenger seat module self-test.

Official Licensed Product
Ford Motor Company

DIAGNOSIS AND TESTING (Continued)

PINPOINT TEST E: DTC B1727, DTC B1731, DTC B1972, DTC B1973: SEAT REAR UP/DOWN SWITCH CIRCUIT SHORT TO BATTERY

TEST CONDITIONS	TEST DETAILS/RESULTS/ACTIONS
E1 CHECK PID SREARSW	
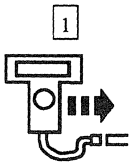 NGS 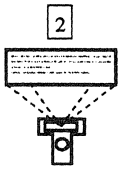 Read PID SREARSW	3 Compare PID SREARSW value: DTC / PID Value B1727 — SHORT or UP B1731 — SHORT or DOWN B1972 — SHORT or UP B1973 — SHORT or DOWN • Does PID SREARSW read as indicated for the DTC being tested? → **Yes** GO to **E4**. → **No** GO to **E2**.
E2 CHECK FOR A STICKING SWITCH	
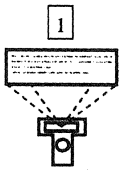 Monitor PID SREARSW 2 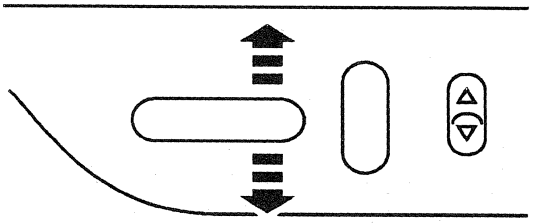 AR0095-A	2 Press the seat regulator control switch to the rear UP then rear DOWN position while monitoring PID SREARSW. • Does PID SREARSW change from UP to DOWN as the seat regulator control switch is pressed to the rear UP and rear DOWN position? → **Yes** GO to **E3**. → **No** REPLACE the seat regulator control switch. REPEAT the appropriate module self-test.

Official Licensed Product
Ford Motor Company

(Continued)

DIAGNOSIS AND TESTING (Continued)

PINPOINT TEST E: DTC B1727, DTC B1731, DTC B1972, DTC B1973: SEAT REAR UP/DOWN SWITCH CIRCUIT SHORT TO BATTERY (Continued)

TEST CONDITIONS	TEST DETAILS/RESULTS/ACTIONS
E3 CHECK FOR DTC B1727	
1 Repeat DSM or Passenger Seat Module Self-Test	• Is the same DTC retrieved? → **Yes** REPLACE the suspect seat module. REPEAT the appropriate module self-test. → **No** The system is operating properly. CHECK for an obstruction or an intermittently sticking switch.
E4 CHECK THE SEAT REGULATOR CONTROL SWITCH	
1 Seat Regulator Control Switch Connector C367 Driver or C368 Passenger 2 Read PID SREARSW	3 Compare PID SREARSW value: DTC / PID Value B1727 — SHORT or UP B1731 — SHORT or DOWN B1972 — SHORT or UP B1973 — SHORT or DOWN • Does PID SREARSW read as indicated for the DTC being tested? → **Yes** GO to **E5** for the DSM or GO to **E6** for the passenger seat module. → **No** REPLACE the seat regulator control switch. REPEAT the appropriate module self-test.

Official Licensed Product Ford Motor Company

(Continued)

DIAGNOSIS AND TESTING (Continued)

PINPOINT TEST E: DTC B1727, DTC B1731, DTC B1972, DTC B1973: SEAT REAR UP/DOWN SWITCH CIRCUIT SHORT TO BATTERY (Continued)

TEST CONDITIONS	TEST DETAILS/RESULTS/ACTIONS
E5 CHECK CIRCUIT 989 (R/LG) OR CIRCUIT 988 (Y/LG) FOR A SHORT TO B+	
1 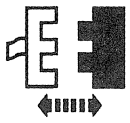 DSM Connector C350 2 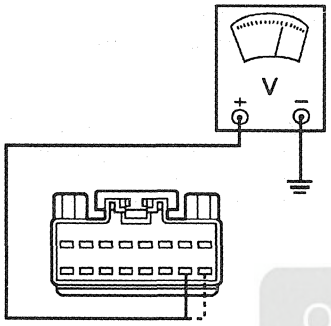 AR0904-A	2 Measure the voltage at the DSM connector Pin C350-15, Circuit 989 (R/LG) for DTC B1727 or Pin C350-16, Circuit 988 (Y/LG) for DTC B1731. • Is the voltage reading B+? → **Yes** REPAIR Circuit 989 (R/LG) or Circuit 988 (Y/LG) for a short to B+. REPEAT the DSM self-test. → **No** REPLACE the driver seat module. REPEAT the DSM self-test.
E6 CHECK CIRCUIT FOR A SHORT TO B+	
1 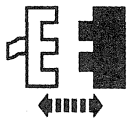 Passenger Seat Module Connector C336 2 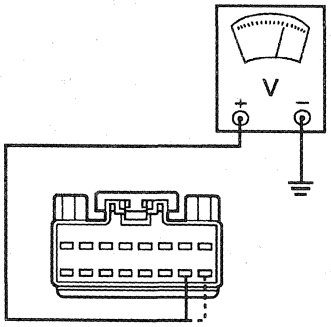 AR0904-A	2 Measure the voltage at the passenger seat module connector Pin C336-16, Circuit 988 (Y/LG) for DTC B1973 or Pin C336-15, Circuit 989 (R/LG) for DTC B1972. • Is the voltage reading B+? → **Yes** REPAIR Circuit 988 (Y/LG) or Circuit 989 (R/LG) for a short to B+. REPEAT the passenger seat module self-test. → **No** REPLACE the passenger seat module. REPEAT the passenger seat module self-test.

Official Licensed Ford Motor Company

DIAGNOSIS AND TESTING (Continued)

PINPOINT TEST F: DRIVER SEAT MOTOR POTENTIOMETER FEED OR RETURN CIRCUIT FAILURE (DTC B1950, B1954, B1958 AND B1962 ALL SET)

TEST CONDITIONS	TEST DETAILS/RESULTS/ACTIONS
F1 CHECK FOR SEAT MOVEMENT	
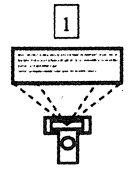 DSM Self-Test	• Does the driver seat move at all during the self-test? → **Yes** GO to **F2**. → **No** GO to Pinpoint Test K.
F2 CHECK DRIVER DOOR MODULE DTCs	
   DDM Self-Test	• Are DTCs B2312, B2316, B2320 and B2324 retrieved? → **Yes** GO to Section 501-09 to repair the DTCs. → **No** GO to **F3**.

Original Licensed Product Ford Motor Company

(Continued)

DIAGNOSIS AND TESTING (Continued)

PINPOINT TEST F: DRIVER SEAT MOTOR POTENTIOMETER FEED OR RETURN CIRCUIT FAILURE (DTC B1950, B1954, B1958 AND B1962 ALL SET) (Continued)

TEST CONDITIONS	TEST DETAILS/RESULTS/ACTIONS
F3 CHECK FOR A SHORT TO B+	
1 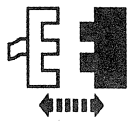 DSM Connector C355 2 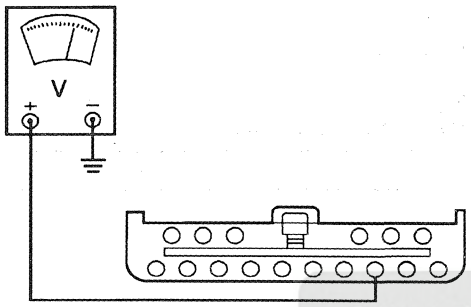 AR0267-B	2 Measure the voltage at the DSM connector Pin C355-14, Circuit 446 (O/W). • Is the voltage reading B+? → **Yes** GO to **F4**. → **No** GO to **F12**.
F4 CHECK THE DRIVER SEAT RECLINER MOTOR POTENTIOMETER FOR A SHORT TO B+	
1 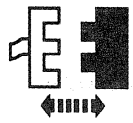 Driver Seat Recliner Motor Potentiometer Connector C326 2 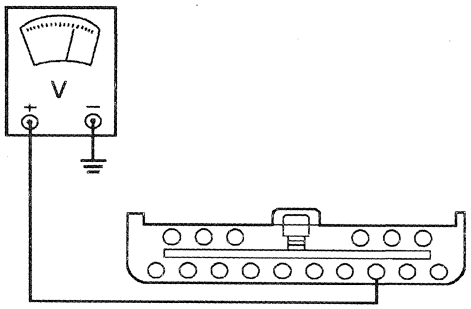 AR0267-B	2 Measure the voltage at the DSM connector Pin C355-14, Circuit 446 (O/W). • Is the voltage reading B+? → **Yes** GO to **F6**. → **No** GO to **F5**.

Official Licensed Product
Ford Motor Company

(Continued)

DIAGNOSIS AND TESTING (Continued)

PINPOINT TEST F: DRIVER SEAT MOTOR POTENTIOMETER FEED OR RETURN CIRCUIT FAILURE (DTC B1950, B1954, B1958 AND B1962 ALL SET) (Continued)

TEST CONDITIONS	TEST DETAILS/RESULTS/ACTIONS
F5 CHECK CIRCUIT 445 (O/LB) FOR A SHORT TO B+	
1 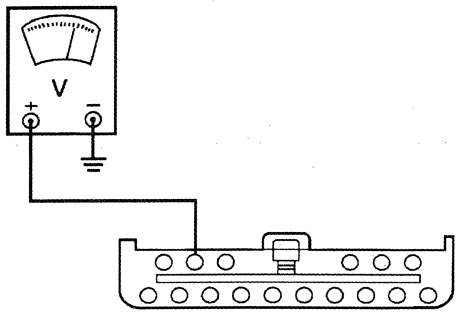 AR0290-B	1 Measure the voltage at the DSM connector Pin C355-2, Circuit 445 (O/LB). • Is the voltage reading B+? → **Yes** REPAIR Circuit 445 (O/LB) for a short to B+. REPEAT the DSM self-test. → **No** REPLACE the driver front seat back latch. REPEAT the DSM self-test.
F6 CHECK THE DRIVER SEAT FRONT MOTOR POTENTIOMETER FOR A SHORT TO B+	
1 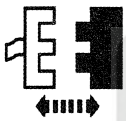 Driver Seat Front Motor Potentiometer Connector C323 2 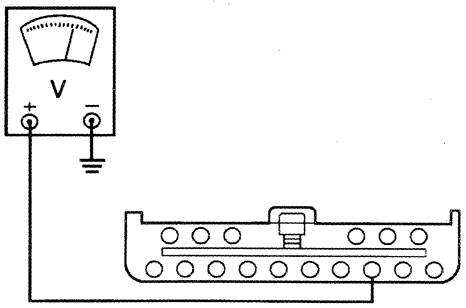 AR0267-B	2 Measure the voltage at the DSM connector Pin C355-14, Circuit 446 (O/W). • Is the voltage reading B+? → **Yes** GO to **F8**. → **No** GO to **F7**.

Official Licensed Product
Ford Motor Company

(Continued)

DIAGNOSIS AND TESTING (Continued)

PINPOINT TEST F: DRIVER SEAT MOTOR POTENTIOMETER FEED OR RETURN CIRCUIT FAILURE (DTC B1950, B1954, B1958 AND B1962 ALL SET) (Continued)

TEST CONDITIONS	TEST DETAILS/RESULTS/ACTIONS
F7 CHECK CIRCUIT 443 (LG/R) FOR A SHORT TO B+	
1 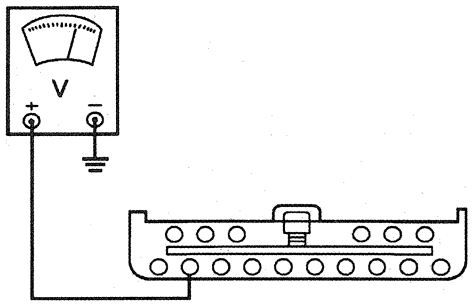 AR0299-B	1 Measure the voltage at the DSM connector Pin C355-8, Circuit 443 (LG/R). • Is the voltage reading B+? → **Yes** REPAIR Circuit 443 (LG/R) for a short to B+. REPEAT the DSM self-test. → **No** REPLACE the driver seat track assembly. REPEAT the DSM self-test.
F8 CHECK THE DRIVER SEAT REAR MOTOR POTENTIOMETER FOR A SHORT TO B+	
1 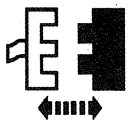 Driver Seat Rear Motor Potentiometer Connector C324 2 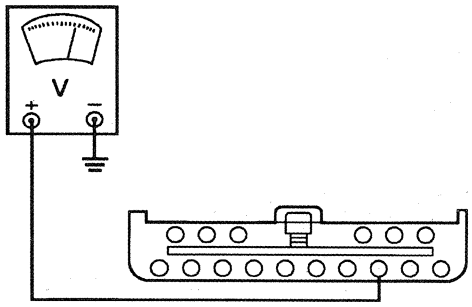 AR0267-B	2 Measure the voltage at the DSM connector Pin C355-14, Circuit 446 (O/W). • Is the voltage reading B+? → **Yes** GO to **F10**. → **No** GO to **F9**.

Official Licensed Product
Ford Motor Company

(Continued)

DIAGNOSIS AND TESTING (Continued)

PINPOINT TEST F: DRIVER SEAT MOTOR POTENTIOMETER FEED OR RETURN CIRCUIT FAILURE (DTC B1950, B1954, B1958 AND B1962 ALL SET) (Continued)

TEST CONDITIONS	TEST DETAILS/RESULTS/ACTIONS
F9 CHECK CIRCUIT 444 (LG/BK) FOR A SHORT TO B+	
1 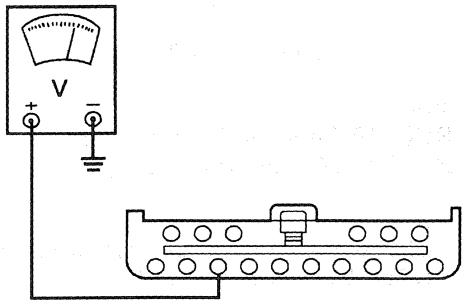 AR0067-B	1 Measure the voltage at the DSM connector Pin C355-9, Circuit 444 (LG/BK). • Is the voltage reading B+? → **Yes** REPAIR Circuit 444 (LG/BK) for a short to B+. REPEAT the DSM self-test. → **No** REPLACE the driver seat track assembly. REPEAT the DSM self-test.
F10 CHECK THE DRIVER SEAT HORIZONTAL MOTOR POTENTIOMETER FOR A SHORT TO B+	
1 Driver Seat Horizontal Motor Potentiometer Connector C325 2 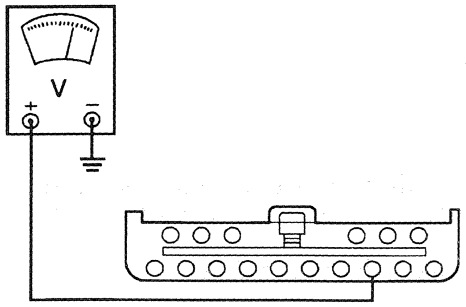 AR0267-B	2 Measure the voltage at the DSM connector Pin C355-14, Circuit 446 (O/W). • Is the voltage reading B+? → **Yes** REPAIR Circuit 446 (O/W) for a short to B+. REPEAT the DSM self-test. → **No** GO to **F11**.

Official Licensed Product
Ford Motor Company

(Continued)

DIAGNOSIS AND TESTING (Continued)

PINPOINT TEST F: DRIVER SEAT MOTOR POTENTIOMETER FEED OR RETURN CIRCUIT FAILURE (DTC B1950, B1954, B1958 AND B1962 ALL SET) (Continued)

TEST CONDITIONS	TEST DETAILS/RESULTS/ACTIONS
F11 CHECK CIRCUIT 442 (LG/O) FOR A SHORT TO B+	
1 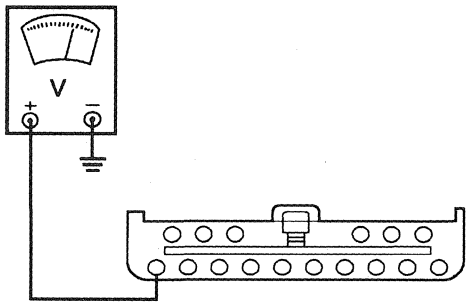 AR0295-B	1 Measure the voltage at the DSM connector Pin C355-7, Circuit 442 (LG/O). • Is the voltage reading B+? → **Yes** REPAIR Circuit 442 (LG/O) for a short to B+. REPEAT the DSM self-test. → **No** REPLACE the driver seat track assembly. REPEAT the DSM self-test.
F12 CHECK CIRCUIT 446 (O/W) FOR A SHORT TO GROUND	
1 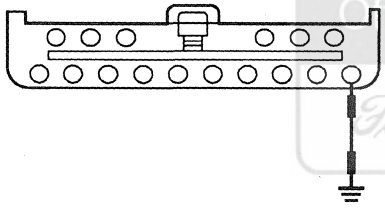 AR0266-B	1 Connect a jumper wire to ground. Connect the other end to the DSM connector Pin C355-16, Circuit 447 (O/R).
2 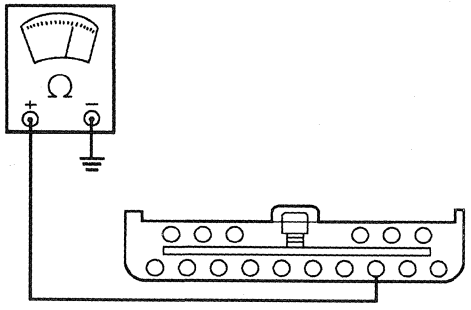 AR0265-B	2 Measure the resistance between the DSM connector Pin C355-14, Circuit 446 (O/W). • Is the resistance reading 700 ohms or less? → **Yes** REPAIR Circuit 446 (O/W) for a short to ground. REPEAT the DSM self-test. → **No** GO to **F13**.

Official Licensed Product
Ford Motor Company

(Continued)

DIAGNOSIS AND TESTING (Continued)

PINPOINT TEST F: DRIVER SEAT MOTOR POTENTIOMETER FEED OR RETURN CIRCUIT FAILURE (DTC B1950, B1954, B1958 AND B1962 ALL SET) (Continued)

TEST CONDITIONS	TEST DETAILS/RESULTS/ACTIONS
F13 CHECK CIRCUIT 446 (O/W) FOR AN OPEN	
1 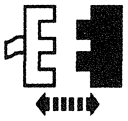 Driver Seat Horizontal Motor Potentiometer C325 2 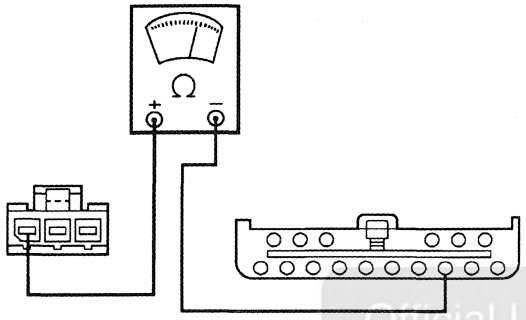 AR0264-B	2 Measure the resistance of Circuit 446 (O/W) between the DSM connector Pin C355-14 and the driver seat horizontal motor potentiometer Connector C325. • Is the resistance reading 5 ohms or less? → **Yes** GO to **F14**. → **No** REPAIR Circuit 446 (O/W) for an open. REPEAT the DSM self-test.
F14 CHECK CIRCUIT 447 (O/R) FOR AN OPEN	
1 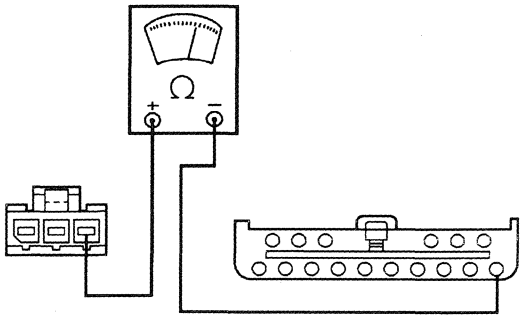 AR0263-B	1 Measure the resistance of Circuit 447 (O/R) between the DSM connector Pin C355-16 and the driver seat horizontal motor potentiometer Connector C325. • Is the resistance reading 5 ohms or less? → **Yes** CLEAR the DSM DTCs. REPEAT the DSM self-test. If DTC B1950, B1954, B1958 and B1962 are retrieved, REPLACE the driver seat module. REPEAT the DSM self-test. → **No** REPAIR Circuit 447 (O/R) for an open. REPEAT the DSM self-test.

Official Licensed Product
Ford Motor Company

DIAGNOSIS AND TESTING (Continued)

PINPOINT TEST G: NO COMMUNICATION WITH THE DRIVER SEAT MODULE

TEST CONDITIONS	TEST DETAILS/RESULTS/ACTIONS
G1 CHECK THE POWER SUPPLY TO THE DRIVER SEAT MODULE (DSM)	
1 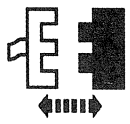 DSM Connector C362 2 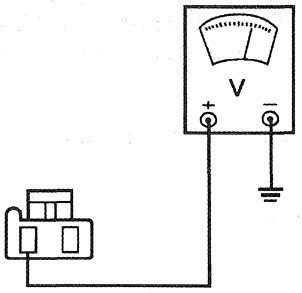 AN0425-A	2 Measure the voltage at the DSM connector Pin C362-1, Circuit 490 (R). • Is the voltage reading B+? → **Yes** GO to **G7**. → **No** GO to **G2**.
G2 CHECK THE POWER DISTRIBUTION BOX FUSE 19 (30A)	
1 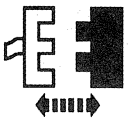 Power Distribution Box Fuse 19 (30A) 2 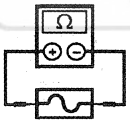 Power Distribution Box Fuse 19 (30A)	• Is the power distribution box Fuse 19 (30A) OK? → **Yes** REPAIR Circuit 490 (R) for an open. REPEAT the Data Link Diagnostic Test. → **No** GO to **G3**.

Official Licensed Product Ford Motor Company

(Continued)

DIAGNOSIS AND TESTING (Continued)

PINPOINT TEST G: NO COMMUNICATION WITH THE DRIVER SEAT MODULE (Continued)

TEST CONDITIONS	TEST DETAILS/RESULTS/ACTIONS
G3 CHECK FOR A SYSTEM SHORT TO GROUND	
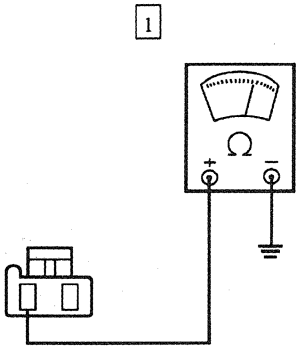 AN0421-A	1 Measure the resistance between the DSM connector Pin C362-1, Circuit 490 (R) and ground. • Is the resistance reading 10 K ohms or less? → **Yes** GO to **G4**. → **No** GO to **G5**.
G4 CHECK CIRCUIT 490 (R) FOR A SHORT TO GROUND	
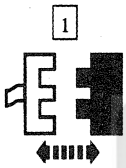 Driver Power Lumbar Switch Connector C345 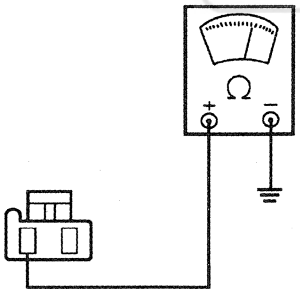 AN0421-A	2 Measure the resistance between the DSM connector Pin C362-1, Circuit 490 (R) and ground. • Is the resistance reading 10 K ohms or less? → **Yes** REPAIR Circuit 490 (R) for a short to ground. REPLACE Fuse 19 (30A). REPEAT the Data Link Diagnostic Test. → **No** REPLACE the driver power lumbar switch. REPLACE Fuse 19 (30A). REPEAT the Data Link Diagnostic Test.

Official Licensed Product
Ford Motor Company

(Continued)

DIAGNOSIS AND TESTING (Continued)

PINPOINT TEST G: NO COMMUNICATION WITH THE DRIVER SEAT MODULE (Continued)

TEST CONDITIONS	TEST DETAILS/RESULTS/ACTIONS
G5 CHECK CIRCUIT 899 (R/W) FOR A SHORT TO GROUND	
1 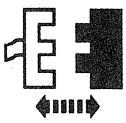 Driver Power Lumbar Switch Connector C345 2 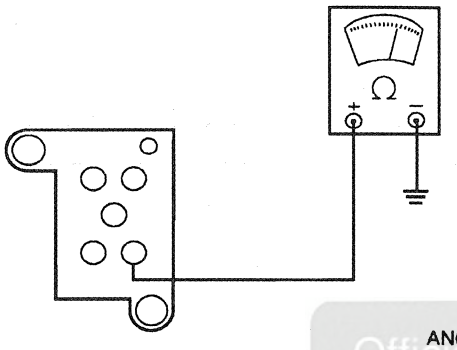 AN0422-B	2 Measure the resistance between the driver power lumbar switch connector Pin C345-5, Circuit 899 (R/W) and ground. • Is the resistance reading 10 K ohms or less? → **Yes** REPAIR Circuit 899 (R/W) for a short to ground. REPLACE Fuse 19 (30A). REPEAT the Data Link Diagnostic Test. → **No** GO to **G6**.
G6 CHECK CIRCUIT 116 (R/BK) FOR A SHORT TO GROUND	
1 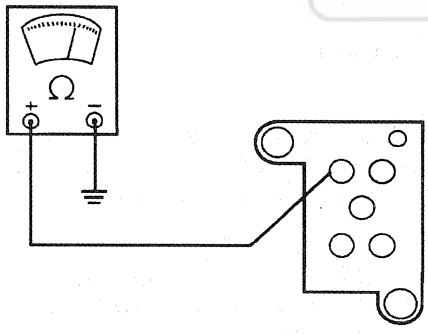 AN0423-B	1 Measure the resistance between the driver power lumbar switch connector Pin C345-1, Circuit 116 (R/BK) and ground. • Is the resistance reading 10 K ohms or less? → **Yes** REPAIR Circuit 116 (R/BK) for a short to ground. REPLACE Fuse 19 (30A). REPEAT the Data Link Diagnostic Test. → **No** REPLACE the driver seat module. REPLACE Fuse 19 (30A). REPEAT the Data Link Diagnostic Test.

Official Licensed Product
Ford Motor Company

(Continued)

DIAGNOSIS AND TESTING (Continued)

PINPOINT TEST G: NO COMMUNICATION WITH THE DRIVER SEAT MODULE (Continued)

TEST CONDITIONS	TEST DETAILS/RESULTS/ACTIONS
G7 CHECK CIRCUIT 1048 (LB/W) FOR B+	
1 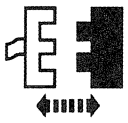 DSM Connector C311 2 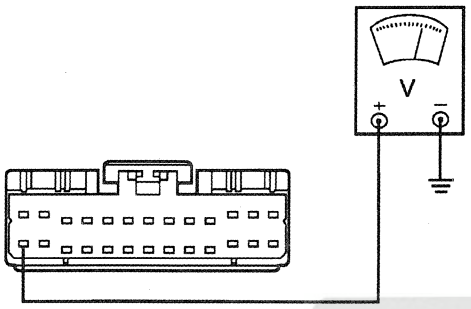 AR0262-B	2 Measure the voltage at the DSM connector Pin C311-14, Circuit 1048 (LB/W). • Is the voltage reading B+? → **Yes** GO to **G11**. → **No** GO to **G8**.
G8 CHECK THE FUSE JUNCTION PANEL FUSE 35 (10A)	
1 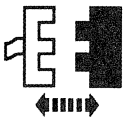 Fuse Junction Panel Fuse 35 (10A) 2 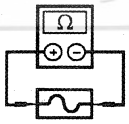 Fuse Junction Panel Fuse 35 (10A)	• Is the Fuse 35 (10A) OK? → **Yes** REPAIR Circuit 1048 (LB/W) for an open. REPEAT the Data Link Diagnostic Test. → **No** GO to **G9**.
G9 CHECK CIRCUIT 1048 (LB/W) FOR AN OPEN	
	1 Measure the voltage at the input cavity of the fuse junction panel Fuse 35.

(Continued)

Official Licensed Product
Ford Motor Company

DIAGNOSIS AND TESTING (Continued)

PINPOINT TEST G: NO COMMUNICATION WITH THE DRIVER SEAT MODULE (Continued)

TEST CONDITIONS	TEST DETAILS/RESULTS/ACTIONS
G9 CHECK CIRCUIT 1048 (LB/W) FOR AN OPEN (Continued)	
2 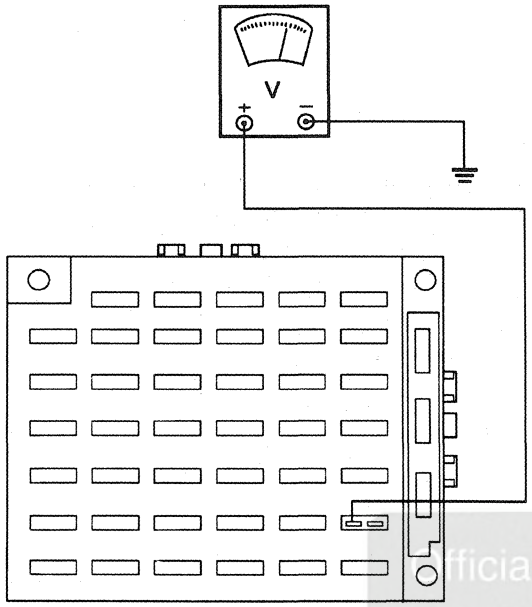 AN0675-A	• Is the voltage reading B+? → **Yes** GO to **G10**. → **No** REPAIR Circuit 490 (R) for an open. REPEAT the Data Link Diagnostic Test.

Official Licensed Product
Ford Motor Company

(Continued)

DIAGNOSIS AND TESTING (Continued)

PINPOINT TEST G: NO COMMUNICATION WITH THE DRIVER SEAT MODULE (Continued)

TEST CONDITIONS	TEST DETAILS/RESULTS/ACTIONS
G10 CHECK CIRCUIT 1048 (LB/W) FOR A SHORT TO GROUND	
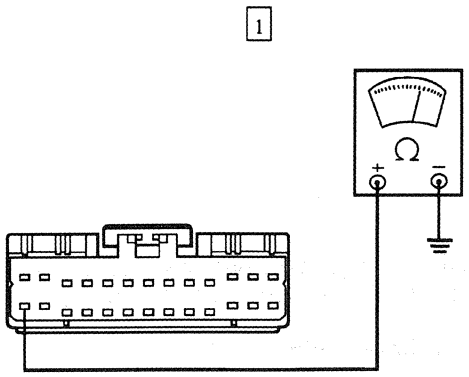 AR0211-B	1 Measure the resistance between the DSM connector Pin C311-14, Circuit 1048 (LB/W) and ground. • Is the resistance reading 10 K ohms or less? → **Yes** REPAIR Circuit 1048 (LB/W) for a short to ground. REPLACE Fuse 35 (10A). REPEAT the Data Link Diagnostic Test. → **No** REPLACE the driver door module. REPLACE Fuse 35 (10A). REPEAT the Data Link Diagnostic Test.
G11 CHECK CIRCUIT 875 (BK/LB) FOR AN OPEN	
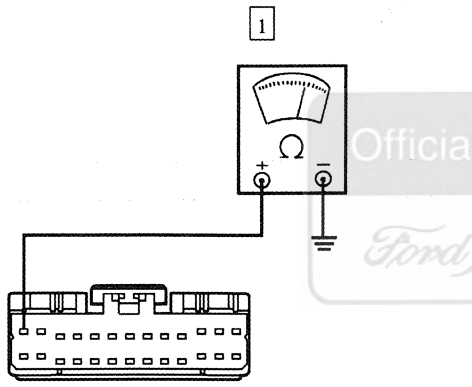 AN0431-B	1 Measure the resistance between the DSM connector Pin C311-1, Circuit 875 (BK/LB) and ground. • Is the resistance reading 5 ohms or less? → **Yes** GO to Section 418-00, Communication System Diagnostics, to diagnose the network concern. → **No** REPAIR Circuit 875 (BK/LB) for an open. REPEAT the Data Link Diagnostic Test.

Official Licensed Product
Ford Motor Company

DIAGNOSIS AND TESTING (Continued)

PINPOINT TEST H: NO COMMUNICATION WITH THE PASSENGER SEAT MODULE

TEST CONDITIONS	TEST DETAILS/RESULTS/ACTIONS
H1 CHECK THE POWER SUPPLY TO THE PASSENGER SEAT MODULE	
1 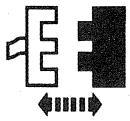 Passenger Seat Module Connector C364 2 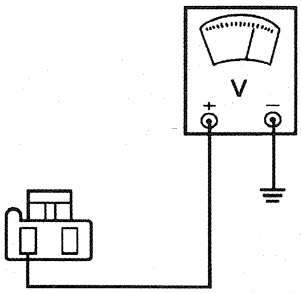 AN0425-A	2 Measure the voltage at the passenger seat module connector Pin C364-1, Circuit 517 (BK/W). • Is the voltage reading B+? → **Yes** GO to **H7**. → **No** GO to **H2**.
H2 CHECK THE POWER DISTRIBUTION BOX FUSE 18 (30A)	
1 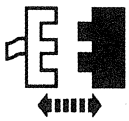 Power Distribution Box Fuse 18 (30A) 2 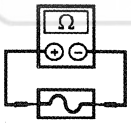 Power Distribution Box Fuse 18 (30A)	• Is the power distribution box Fuse 18 (30A) OK? → **Yes** REPAIR Circuit 517 (BK/W) for an open. REPEAT the Data Link Diagnostic Test. → **No** GO to **H3**.

Official Licensed Product
Ford Motor Company

(Continued)

DIAGNOSIS AND TESTING (Continued)

PINPOINT TEST H: NO COMMUNICATION WITH THE PASSENGER SEAT MODULE (Continued)

TEST CONDITIONS	TEST DETAILS/RESULTS/ACTIONS
H3 CHECK FOR A SYSTEM SHORT TO GROUND	
1 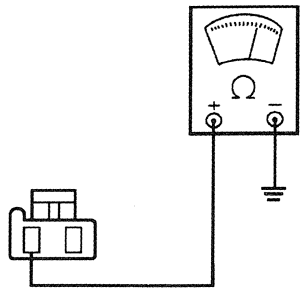 AN0421-A	1 Measure the resistance between the passenger seat module connector Pin C364-1, Circuit 517 (BK/W) and ground. • Is the resistance reading 10 K ohms or less? → **Yes** GO to **H4**. → **No** GO to **H5**.
H4 CHECK CIRCUIT 517 (BK/W) FOR A SHORT TO GROUND	
1 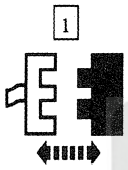 Passenger Power Lumbar Switch Connector C344 2 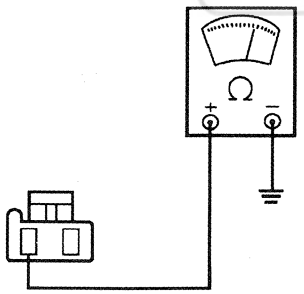 AN0421-A	2 Measure the resistance between the passenger seat module connector Pin C364-1, Circuit 517 (BK/W) and ground. • Is the resistance reading 10 K ohms or less? → **Yes** REPAIR Circuit 517 (BK/W) for a short to ground. REPLACE Fuse 18 (30A). REPEAT the Data Link Diagnostic Test. → **No** REPLACE the passenger power lumbar switch. REPLACE Fuse 18 (30A). REPEAT the Data Link Diagnostic Test.

Official Licensed Product
Ford Motor Company

(Continued)

DIAGNOSIS AND TESTING (Continued)

PINPOINT TEST H: NO COMMUNICATION WITH THE PASSENGER SEAT MODULE (Continued)

TEST CONDITIONS	TEST DETAILS/RESULTS/ACTIONS
H5 CHECK CIRCUIT 899 (R/W) FOR A SHORT TO GROUND	
1 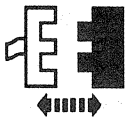 Passenger Power Lumbar Switch Connector C344 2 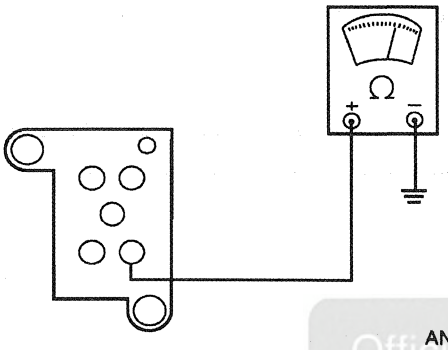 AN0422-B	2 Measure the resistance between the passenger power lumbar switch connector Pin C344-5, Circuit 899 (R/W) and ground. • Is the resistance reading 10 K ohms or less? → **Yes** REPAIR Circuit 899 (R/W) for a short to ground. REPLACE Fuse 18 (30A). REPEAT the Data Link Diagnostic Test. → **No** GO to **H6**.
H6 CHECK CIRCUIT 116 (R/BK) FOR A SHORT TO GROUND	
1 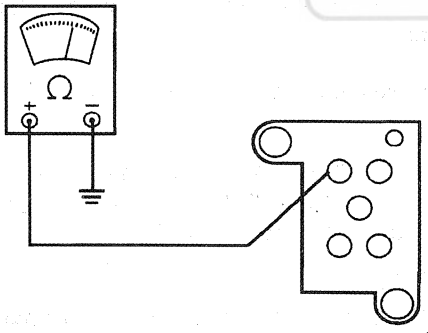 AN0423-B	1 Measure the resistance between the passenger power lumbar switch connector Pin C344-1, Circuit 116 (R/BK) and ground. • Is the resistance reading 10 K ohms or less? → **Yes** REPAIR Circuit 116 (R/BK) for a short to ground REPLACE Fuse 18 (30A). REPEAT the Data Link Diagnostic Test. → **No** REPLACE the passenger seat module. REPLACE Fuse 18 (30A). REPEAT the Data Link Diagnostic Test.

(Continued)

Official Licensed Product
Ford Motor Company

DIAGNOSIS AND TESTING (Continued)

PINPOINT TEST H: NO COMMUNICATION WITH THE PASSENGER SEAT MODULE (Continued)

TEST CONDITIONS	TEST DETAILS/RESULTS/ACTIONS
H7 CHECK CIRCUIT 785 (BK/LG) FOR B+	
1 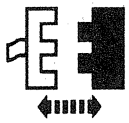 Passenger Seat Module Connector C320 2 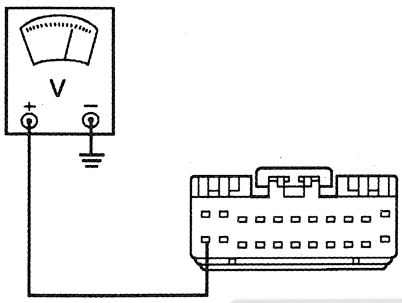 AR0259-B	2 Measure the voltage at the passenger seat module connector Pin C320-12, Circuit 785 (BK/LG). • Is the voltage reading B+? → **Yes** GO to **H11**. → **No** GO to **H8**.
H8 CHECK FUSE JUNCTION PANEL FUSE 38 (10A)	
1 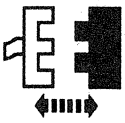 Fuse Junction Panel Fuse 38 (10A) 2 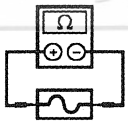 Fuse Junction Panel Fuse 38 (10A)	• Is Fuse 38 (10A) OK? → **Yes** GO to **H9**. → **No** GO to **H10**.

(Continued)

Official Licensed Product
Ford Motor Company

DIAGNOSIS AND TESTING (Continued)

PINPOINT TEST H: NO COMMUNICATION WITH THE PASSENGER SEAT MODULE (Continued)

TEST CONDITIONS	TEST DETAILS/RESULTS/ACTIONS
H9 CHECK CIRCUIT 785 (BK/LG) FOR AN OPEN	
1 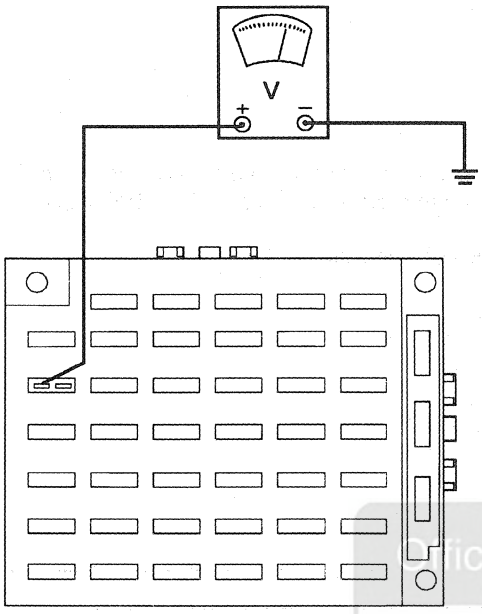 AK1372-A	1 Measure the voltage at the input cavity of the fuse junction panel Fuse 12. • Is the voltage reading B+? → **Yes** REPAIR Circuit 785 (BK/LG) for an open. REPEAT the Data Link Diagnostic Test. → **No** REPAIR Circuit 517 (BK/W) for an open. REPEAT the Data Link Diagnostic Test.
H10 CHECK CIRCUIT 785 (BK/LG) FOR A SHORT TO GROUND	
1 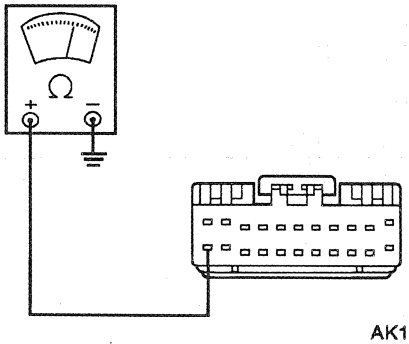 AK1373-A	1 Measure the resistance between the passenger seat module connector Pin C320-12, Circuit 785 (BK/LG) and ground. • Is the resistance reading 10 K ohms or less? → **Yes** REPAIR Circuit 785 (BK/LG) for a short to ground. REPLACE Fuse 38 (10A). REPEAT the Data Link Diagnostic Test. → **No** REPLACE the passenger seat module. REPLACE Fuse 38 (10A). REPEAT the Data Link Diagnostic Test.

(Continued)

Official Licensed Product
Ford Motor Company

DIAGNOSIS AND TESTING (Continued)

PINPOINT TEST H: NO COMMUNICATION WITH THE PASSENGER SEAT MODULE (Continued)

TEST CONDITIONS	TEST DETAILS/RESULTS/ACTIONS
H11 CHECK CIRCUIT 938 (BK/LG) FOR AN OPEN	
1 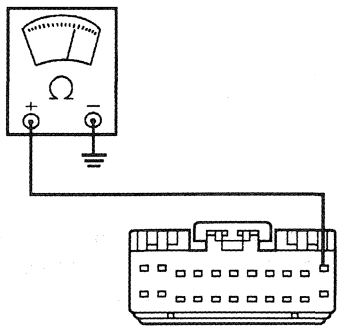 AR0258-B	1 Measure the resistance between the passenger seat module connector Pin C320-11, Circuit 938 (BK/LG) and ground. • Is the resistance reading 5 ohms or less? → **Yes** GO to Section 418-00, Communication System Diagnostics to diagnose the network concern. → **No** REPAIR Circuit 938 (BK/LG) for an open. REPEAT the Data Link Diagnostic Test.

PINPOINT TEST J: NO COMMUNICATION WITH STEERING COLUMN/IGNITION/LIGHTING (SCIL) CONTROL MODULE

TEST CONDITIONS	TEST DETAILS/RESULTS/ACTIONS
J1 CHECK CIRCUIT 875 (BK/LB) FOR AN OPEN	
1 SCIL Connector C288 2 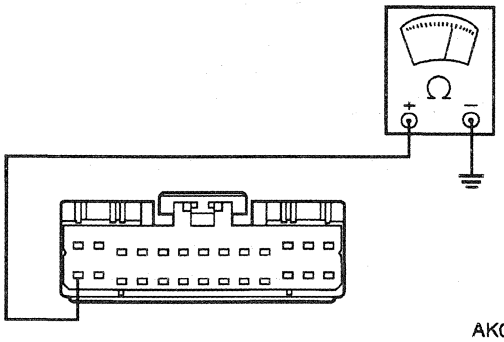 AK0313-B	2 Measure the resistance between the steering column/ignition/lighting control module connector Pin C288-14, Circuit 875 (BK/LB) and ground. • Is the resistance 5 ohms or less? → **Yes** GO to **J2**. → **No** REPAIR Circuit 875 (BK/LB) for an open. REPEAT the Data Link Diagnostic Test.

Official Licensed Product Ford Motor Company

(Continued)

DIAGNOSIS AND TESTING (Continued)

PINPOINT TEST J: NO COMMUNICATION WITH STEERING COLUMN/IGNITION/LIGHTING (SCIL) CONTROL MODULE (Continued)

TEST CONDITIONS	TEST DETAILS/RESULTS/ACTIONS
J2 CHECK CIRCUIT 57 (BK) FOR AN OPEN	
1 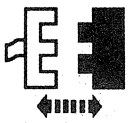 SCIL Connector C287 2 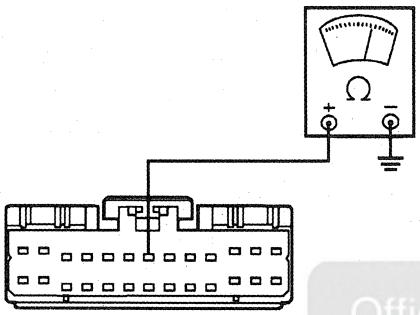 AK0314-B	2 Measure the resistance between the steering column/ignition/lighting control module connector Pin C287-7, Circuit 57 (BK) and ground. • Is the resistance 5 ohms or less? → **Yes** GO to **J3**. → **No** REPAIR Circuit 57 (BK) for an open. REPEAT the Data Link Diagnostic Test.
J3 CHECK FOR B+ SUPPLY ON THE STEERING COLUMN/IGNITION/LIGHTING CONTROL MODULE CONNECTOR C287	
1 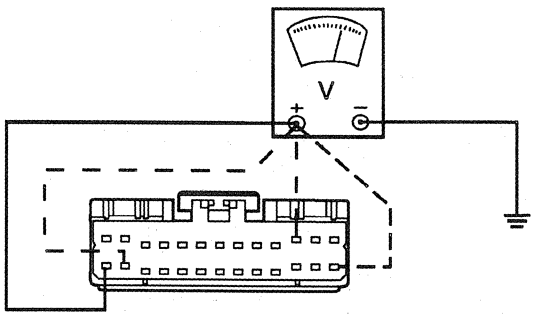 AK1260-A	1 Measure the voltage at each of the following steering column/ignition/lighting control module connector C287 Pins. Note the voltage reading at each Pin: — C287-14, Circuit 906 (R/O) — C287-26, Circuit 19 (LB/R) — C287-15, Circuit 1055 (W/LG) — C287-11, Circuit 1056 (DB/LG) • Is the voltage reading on any circuit B+? → **Yes** GO to Communication System Diagnostics in Section 418-00 to diagnose the network concern. → **No** For each suspect circuit, REFER to the Electrical and Vacuum Troubleshooting Manual, Cell 58, Lighting Control Module and Cell 11, Circuit Protection/Fuse Panel to identify the subsystem in need of repair. REPAIR as required. GO to **J4**.

(Continued)

Official Licensed Product Ford Motor Company

DIAGNOSIS AND TESTING (Continued)

PINPOINT TEST J: NO COMMUNICATION WITH STEERING COLUMN/IGNITION/LIGHTING (SCIL) CONTROL MODULE (Continued)

TEST CONDITIONS	TEST DETAILS/RESULTS/ACTIONS
J4 CHECK FOR B+ SUPPLY ON STEERING COLUMN/IGNITION/LIGHTING CONTROL MODULE CONNECTOR C289	
1 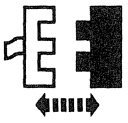 SCIL Connector C289 2 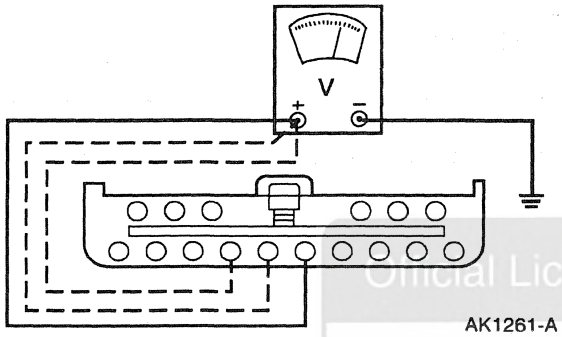 AK1261-A	2 Measure the voltage at each of the following steering column/ignition/lighting control module connector C289 Pins. Note the voltage reading at each Pin: — C289-5, Circuit 1058 (BR/W) — C289-6, Circuit 1057 (O/BK) — C289-7, Circuit 908 (PK/LG) • Is the voltage reading on any circuit B+? → **Yes** GO to Communication System Diagnostics in Section 418-00 to diagnose the network concern. → **No** For each suspect circuit, REFER to the Electrical and Vacuum Troubleshooting Manual, Cell 58, Lighting Control Module and Cell 11, Circuit Protection/Fuse Panel to identify the subsystem in need of repair. REPAIR as required. REPEAT the Data Link Diagnostic Test.

Official Licensed Product
Ford Motor Company

DIAGNOSIS AND TESTING (Continued)

PINPOINT TEST K: THE POWER SEAT IS INOPERATIVE—DRIVER

TEST CONDITIONS	TEST DETAILS/RESULTS/ACTIONS
K1 CHECK SEAT OPERATION	
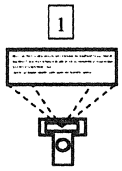 Select ACTIVE COMMAND DRIVER SEAT CONTROL 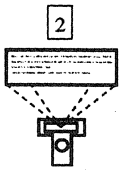 Trigger HORZ FWD ON	• Does the driver seat move forward? → **Yes** GO to **K21**. → **No** GO to **K2**.
K2 CHECK THE DRIVER SEAT MODULE FUSE	
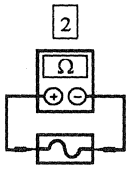 Driver Seat Module Fuse	1 Remove the fuse from the seat module. • Is the fuse OK? → **Yes** GO to **K3**. → **No** GO to **K5**.

Official Licensed Product
Ford Motor Company

(Continued)

DIAGNOSIS AND TESTING (Continued)

PINPOINT TEST K: THE POWER SEAT IS INOPERATIVE—DRIVER (Continued)

TEST CONDITIONS	TEST DETAILS/RESULTS/ACTIONS
K3 CHECK CIRCUIT 490 (R) FOR B+	
1 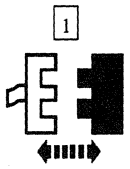 DSM Connector C362 2 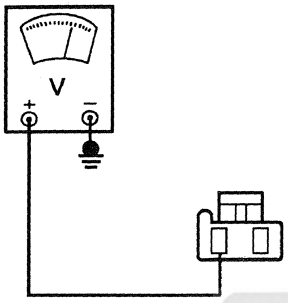 AR0066-A	2 Measure the voltage at the DSM connector Pin C362-1, Circuit 490 (R). • Is the voltage reading B+? → **Yes** GO to **K4**. → **No** REPAIR Circuit 490 (R) for an open. TEST the system for normal operation.
K4 CHECK CIRCUIT 57 (BK) FOR AN OPEN	
1 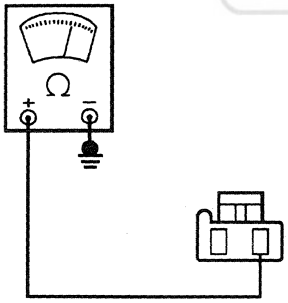 AR0261-A	1 Measure the resistance between the DSM connector Pin C362-2, Circuit 57 (BK) and ground. • Is the resistance reading 5 ohms or less? → **Yes** REPLACE the driver seat module. TEST the system for normal operation. → **No** REPAIR Circuit 57 (BK) for an open. TEST the system for normal operation.

Official Licensed Product
Ford Motor Company

(Continued)

DIAGNOSIS AND TESTING (Continued)

PINPOINT TEST K: THE POWER SEAT IS INOPERATIVE—DRIVER (Continued)

TEST CONDITIONS	TEST DETAILS/RESULTS/ACTIONS
K5 CHECK CIRCUIT 990 (Y/LB) FOR A SHORT TO GROUND	
1 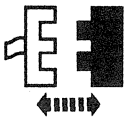 DSM Connector C355 2 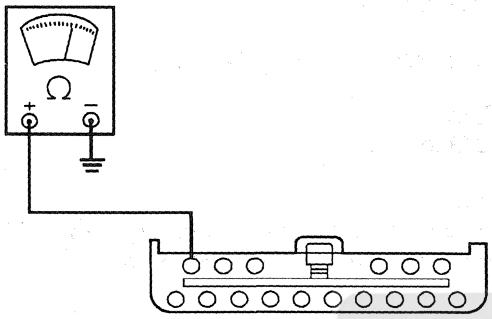 AR0226-B	2 Measure the resistance between the DSM connector Pin C355-1, Circuit 990 (Y/LB) and ground. • Is the resistance reading 10 K ohms or less? → **Yes** GO to **K6**. → **No** GO to **K8**.
K6 CHECK THE DRIVER SEAT RECLINER MOTOR ASSEMBLY FOR A SHORT TO GROUND	
1 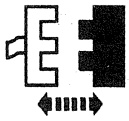 Driver Seat Recliner Motor Connector C353 2 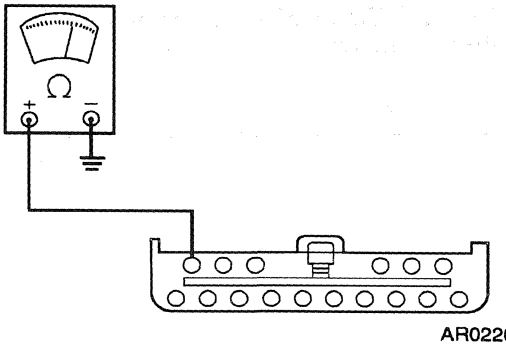 AR0226-B	2 Measure the resistance between the DSM connector Pin C355-1, Circuit 990 (Y/LB) and ground. • Is the resistance reading 10 K ohms or less? → **Yes** REPAIR Circuit 990 (Y/LB) for a short to ground. TEST the system for normal operation. → **No** GO to **K7**.

Official Licensed Product
Ford Motor Company

(Continued)

DIAGNOSIS AND TESTING (Continued)

PINPOINT TEST K: THE POWER SEAT IS INOPERATIVE—DRIVER (Continued)

TEST CONDITIONS	TEST DETAILS/RESULTS/ACTIONS
K7 CHECK CIRCUIT 51 (BK/W) FOR A SHORT TO GROUND	
1 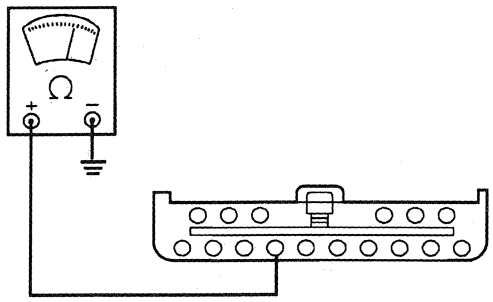 AR0229-B	1 Measure the resistance between the DSM connector Pin C355-10, Circuit 51 (BK/W) and ground. • Is the resistance reading 10 K ohms or less? → **Yes** REPAIR Circuit 51 (BK/W) for a short to ground. TEST the system for normal operation. → **No** REPLACE the driver front seat back latch. TEST the system for normal operation.
K8 CHECK CIRCUIT 979 (R/LB) FOR A SHORT TO GROUND	
1 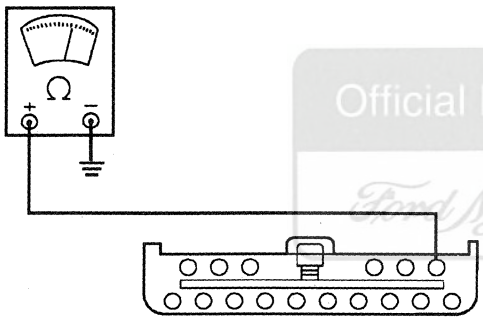 AR0240-B	1 Measure the resistance between the DSM connector Pin C355-6, Circuit 979 (R/LB) and ground. • Is the resistance reading 10 K ohms or less? → **Yes** GO to **K9**. → **No** GO to **K11**.

Official Licensed Product
Ford Motor Company

(Continued)

DIAGNOSIS AND TESTING (Continued)

PINPOINT TEST K: THE POWER SEAT IS INOPERATIVE—DRIVER (Continued)

TEST CONDITIONS	TEST DETAILS/RESULTS/ACTIONS
K9 CHECK THE DRIVER SEAT FRONT MOTOR ASSEMBLY FOR A SHORT TO GROUND	
1 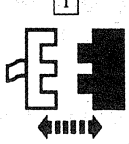 DSM Connector C351 2 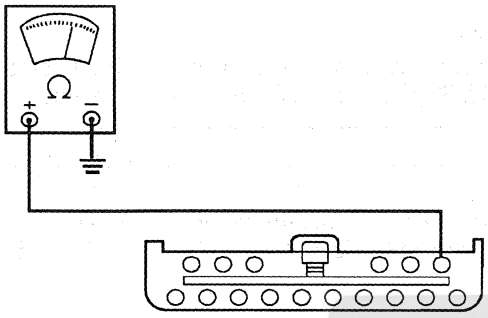 AR0240-B	2 Measure the resistance between the DSM connector Pin C355-6, Circuit 979 (R/LB) and ground. • Is the resistance reading 10 K ohms or less? → **Yes** REPAIR Circuit 979 (R/LB) for a short to ground. TEST the system for normal operation. → **No** GO to **K10**.
K10 CHECK CIRCUIT 978 (Y/LB) FOR A SHORT TO GROUND	
1 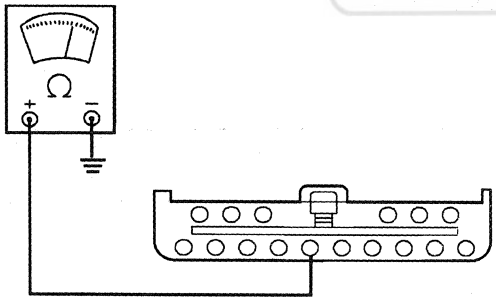 AR0237-B	1 Measure the resistance between the DSM connector Pin C355-11, Circuit 978 (Y/LB) and ground. • Is the resistance reading 10 K ohms or less? → **Yes** REPAIR Circuit 978 (Y/LB) for a short to ground. TEST the system for normal operation. → **No** REPLACE the driver seat track assembly. TEST the system for normal operation.

Official Licensed Product
Ford Motor Company

(Continued)

DIAGNOSIS AND TESTING (Continued)

PINPOINT TEST K: THE POWER SEAT IS INOPERATIVE—DRIVER (Continued)

TEST CONDITIONS	TEST DETAILS/RESULTS/ACTIONS
K11 CHECK CIRCUIT 983 (R/LG) FOR A SHORT TO GROUND	
1 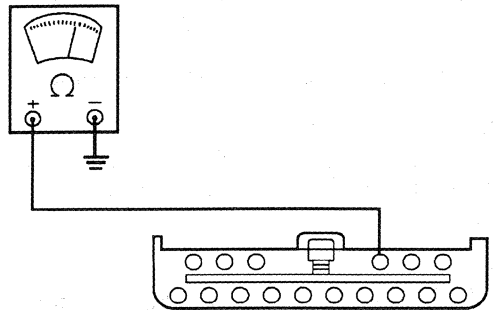 AR0251-B	1 Measure the resistance between the DSM connector Pin C355-4, Circuit 983 (R/LG) and ground. • Is the resistance reading 10 K ohms or less? → **Yes** GO to **K12**. → **No** GO to **K14**.
K12 CHECK THE DRIVER SEAT REAR MOTOR ASSEMBLY FOR A SHORT TO GROUND	
1 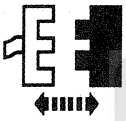 Driver Seat Motor Connector C351 2 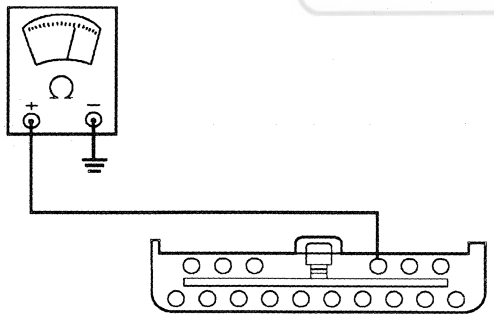 AR0251-B	2 Measure the resistance between the DSM connector Pin C355-4, Circuit 983 (R/LG) and ground. • Is the resistance reading 10 K ohms or less? → **Yes** REPAIR Circuit 983 (R/LG) for a short to ground. TEST the system for normal operation. → **No** GO to **K13**.

Official Licensed Product
Ford Motor Company

(Continued)

DIAGNOSIS AND TESTING (Continued)

PINPOINT TEST K: THE POWER SEAT IS INOPERATIVE—DRIVER (Continued)

TEST CONDITIONS	TEST DETAILS/RESULTS/ACTIONS
K13 CHECK CIRCUIT 982 (Y/LG) FOR A SHORT TO GROUND	
1 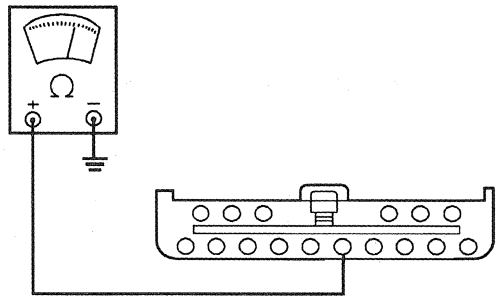 AR0248-B	1 Measure the resistance between the DSM connector Pin C355-12, Circuit 982 (Y/LG) and ground. • Is the resistance reading 10 K ohms or less? → **Yes** REPAIR Circuit 982 (Y/LG) for a short to ground. TEST the system for normal operation. → **No** REPLACE the driver seat track assembly. TEST the system for normal operation.
K14 CHECK CIRCUIT 981 (R/W) FOR A SHORT TO GROUND	
1 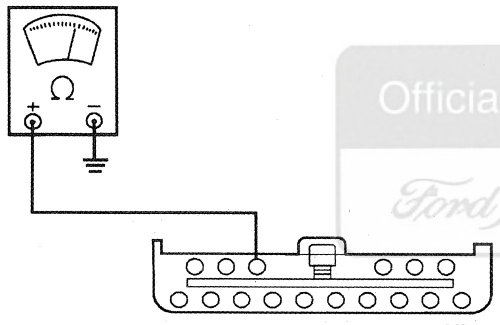 AR0218-B	1 Measure the resistance between the DSM connector Pin C355-3, Circuit 981 (R/W) and ground. • Is the resistance reading 10 K ohms or less? → **Yes** GO to **K15**. → **No** GO to **K17**.

Official Licensed Product
Ford Motor Company

(Continued)

DIAGNOSIS AND TESTING (Continued)

PINPOINT TEST K: THE POWER SEAT IS INOPERATIVE—DRIVER (Continued)

TEST CONDITIONS	TEST DETAILS/RESULTS/ACTIONS
K15 CHECK THE DRIVER SEAT HORIZONTAL MOTOR ASSEMBLY FOR A SHORT TO GROUND	
1 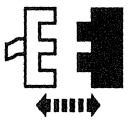 Driver Seat Motor Connector C351 2 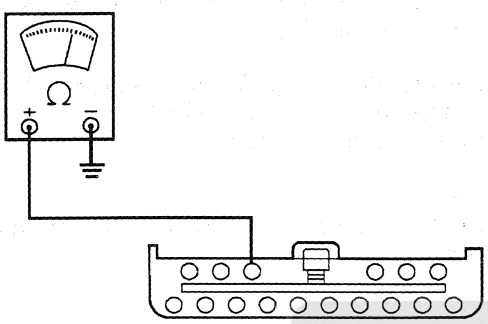 AR0218-B	2 Measure the resistance between the DSM connector Pin C355-3, Circuit 981 (R/W) and ground. • Is the resistance reading 10 K ohms or less? → **Yes** REPAIR Circuit 981 (R/W) for a short to ground. TEST the system for normal operation. → **No** GO to **K16**.
K16 CHECK CIRCUIT 980 (Y/W) FOR A SHORT TO GROUND	
1 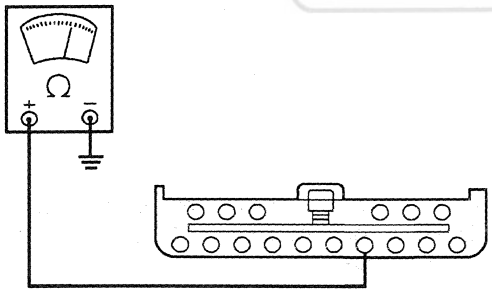 AR0215-B	1 Measure the resistance between the DSM connector Pin C355-13, Circuit 980 (Y/W) and ground. • Is the resistance reading 10 K ohms or less? → **Yes** REPAIR Circuit 980 (Y/W) for a short to ground. TEST the system for normal operation. → **No** REPLACE the driver seat track assembly. TEST the system for normal operation.

Official Licensed Product Ford Motor Company

(Continued)

DIAGNOSIS AND TESTING (Continued)

PINPOINT TEST K: THE POWER SEAT IS INOPERATIVE—DRIVER (Continued)

TEST CONDITIONS	TEST DETAILS/RESULTS/ACTIONS
K17 CHECK PID SFWD__SW	
1 DSM Connector C355 2 Read DSM PID SFWD__SW 3 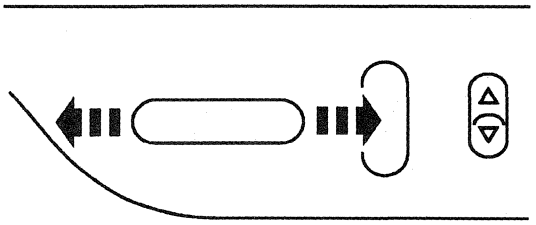 AR0301-A	3 Move the driver seat regulator control switch to the FORWARD then REARWARD position while monitoring PID SFWD__SW. • Does PID SFWD__SW read FWD and RWD when the switch is pressed in the corresponding direction? → **Yes** REPLACE the DSM. TEST the system for normal operation. → **No** GO to **K18**.
K18 CHECK CIRCUIT 1048 (LB/W) FOR VOLTAGE	
1 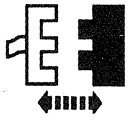 Driver Seat Regulator Control Switch Connector C367 2 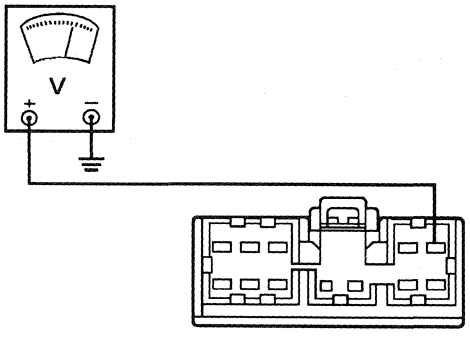 AR0213-B	2 Measure the voltage at the driver seat regulator control switch connector Pin C367-5, Circuit 1048 (LB/W) and ground. • Is the voltage reading B+? → **Yes** REPLACE the driver seat regulator control switch. TEST the system for normal operation. → **No** GO to **K19**.

Official Licensed Product
Ford Motor Company

(Continued)

DIAGNOSIS AND TESTING (Continued)

PINPOINT TEST K: THE POWER SEAT IS INOPERATIVE—DRIVER (Continued)

TEST CONDITIONS	TEST DETAILS/RESULTS/ACTIONS
K19 CHECK CIRCUIT 1048 (LB/W) AT THE DRIVER SEAT MODULE	
1 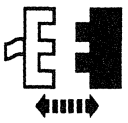 DSM Connector C311 2 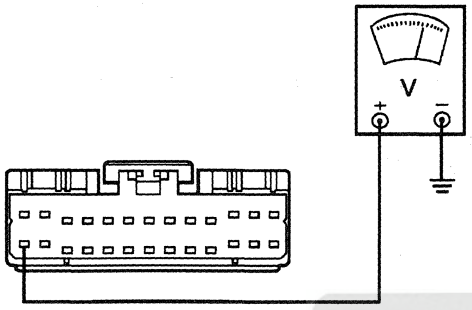 AR0262-B	2 Measure the voltage at the DSM connector Pin C311-14, Circuit 1048 (LB/W) and ground. • Is the voltage reading B+? → **Yes** REPAIR Circuit 1048 (LB/W) for an open between the driver seat regulator control switch and the harness splice. TEST the system for normal operation. → **No** GO to **K20**.

Official Licensed Product
Ford Motor Company

(Continued)

DIAGNOSIS AND TESTING (Continued)

PINPOINT TEST K: THE POWER SEAT IS INOPERATIVE—DRIVER (Continued)

TEST CONDITIONS	TEST DETAILS/RESULTS/ACTIONS
K20 CHECK CIRCUIT 1048 (LB/W) FOR A SHORT TO GROUND	

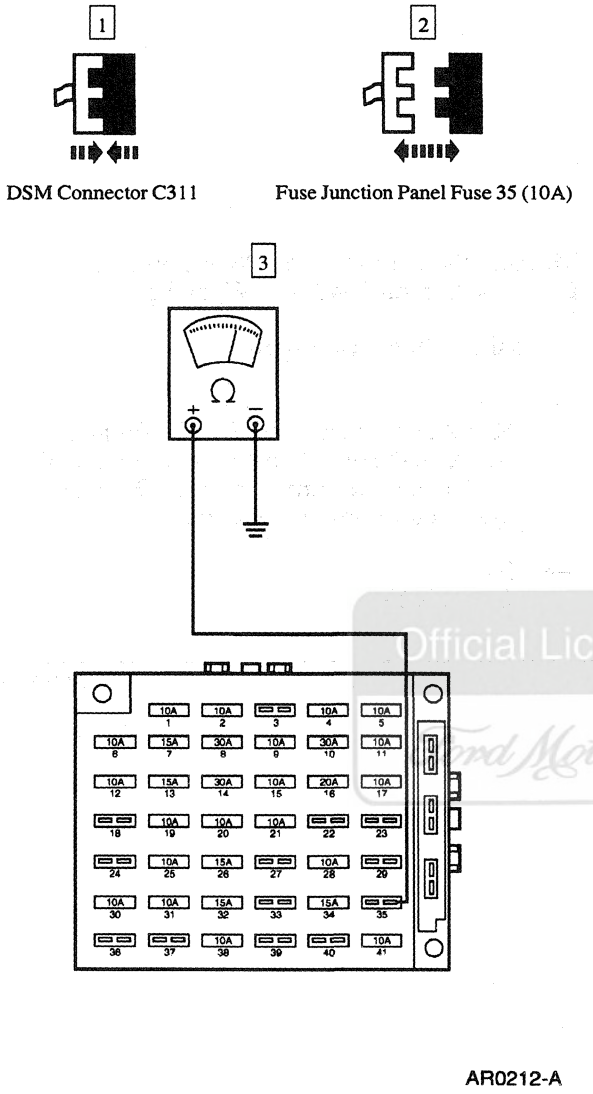

3 Measure the resistance between the output side of fuse junction panel Fuse 35 (10A), Circuit 1048 (LB/W) and ground.

- Is the resistance reading 10 K ohms or less?

→ **Yes**
GO to **K21**.

→ **No**
GO to **K23**.

Official Licensed Product
Ford Motor Company

(Continued)

DIAGNOSIS AND TESTING (Continued)

PINPOINT TEST K: THE POWER SEAT IS INOPERATIVE—DRIVER (Continued)

TEST CONDITIONS	TEST DETAILS/RESULTS/ACTIONS
K21 CHECK THE DRIVER SEAT MODULE FOR A SHORT TO GROUND	
1 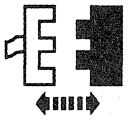 DSM Connector C311 2 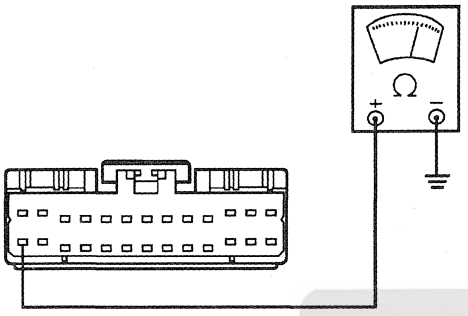 AR0211-B	2 Measure the resistance between the DSM connector Pin C311-14, Circuit 1048 (LB/W) and ground. • Is the resistance reading 10 K ohms or less? → **Yes** GO to **K22**. → **No** REPLACE the driver seat module. TEST the system for normal operation.
K22 CHECK THE DRIVER SEAT REGULATOR CONTROL SWITCH FOR SHORT TO GROUND	
1 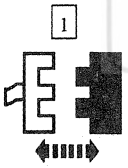 Driver Seat Regulator Control Switch Connector C367 2 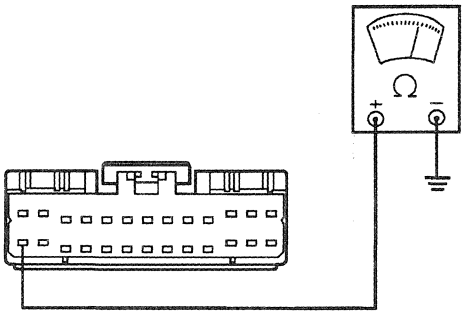 AR0211-B	2 Measure the resistance between the DSM connector Pin C311-14, Circuit 1048 (LB/W) and ground. • Is the resistance reading 10 K ohms or less? → **Yes** REPAIR Circuit 1048 (LB/W) for a short to ground. TEST the system for normal operation. → **No** REPLACE the driver seat regulator control switch. TEST the system for normal operation.

Official Licensed Product Ford Motor Company

(Continued)

DIAGNOSIS AND TESTING (Continued)

PINPOINT TEST K: THE POWER SEAT IS INOPERATIVE—DRIVER (Continued)

TEST CONDITIONS	TEST DETAILS/RESULTS/ACTIONS
K23 CHECK CIRCUIT 1048 (LB/W) FOR AN OPEN	
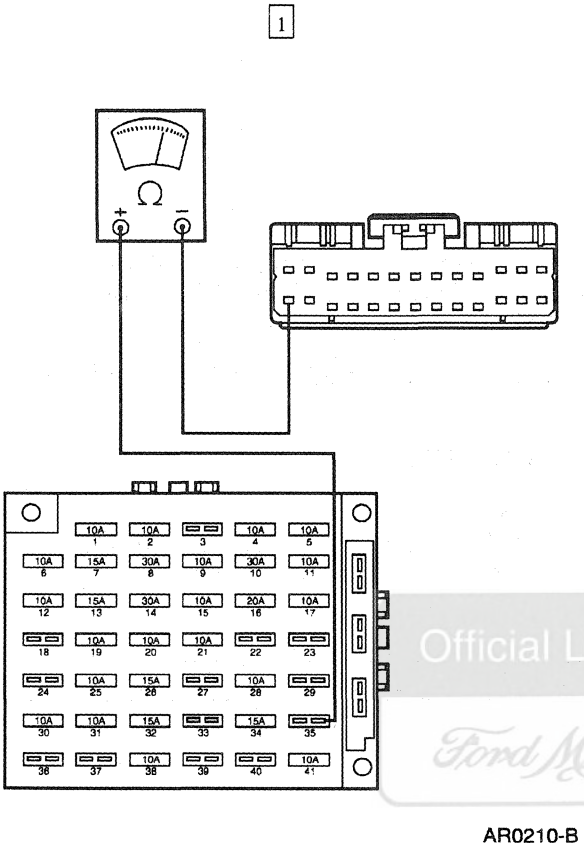 AR0210-B	1 Measure the resistance of Circuit 1048 (LB/W) between the output side of fuse junction panel Fuse 35 (10A) and the DSM connector Pin C311-14. • Is the resistance reading 5 ohms or less? → **Yes** REPAIR Circuit 490 (R) for an open. TEST the system for normal operation. → **No** REPAIR Circuit 1048 (LB/W) for an open. TEST the system for normal operation.

Official Licensed Product
Ford Motor Company

PINPOINT TEST L: THE POWER SEAT IS INOPERATIVE—PASSENGER

TEST CONDITIONS	TEST DETAILS/RESULTS/ACTIONS
L1 CHECK THE PASSENGER SEAT OPERATION	
1 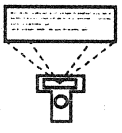 Select Passenger Seat Module ACTIVE COMMAND-PASSENGER SEAT CONTROL 2 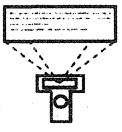 Trigger HORZ FWD ON	• Does the passenger seat move forward? → **Yes** GO to **L21**. → **No** GO to **L2**.

(Continued)

DIAGNOSIS AND TESTING (Continued)

PINPOINT TEST L: THE POWER SEAT IS INOPERATIVE—PASSENGER (Continued)

TEST CONDITIONS	TEST DETAILS/RESULTS/ACTIONS
L2 CHECK THE PASSENGER SEAT MODULE FUSE	
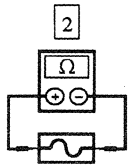 Passenger Seat Module Fuse	1 Remove the fuse from the passenger seat module. • Is the fuse OK? → **Yes** GO to **L3**. → **No** GO to **L5**.
L3 CHECK CIRCUIT 517 (BK/W) FOR B+	
 Passenger Seat Module Connector C364 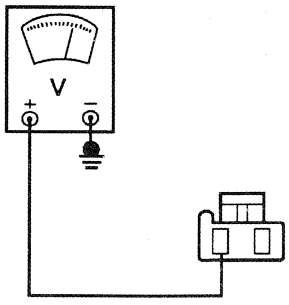 AR0066-A	2 Measure the voltage at the passenger seat module connector Pin C364-1, Circuit 517 (BK/W) and ground. • Is the voltage reading B+? → **Yes** GO to **L4**. → **No** REPAIR Circuit 517 (BK/W) for an open. TEST the system for normal operation.

Official Licensed Product
Ford Motor Company

(Continued)

DIAGNOSIS AND TESTING (Continued)

PINPOINT TEST L: THE POWER SEAT IS INOPERATIVE—PASSENGER (Continued)

TEST CONDITIONS	TEST DETAILS/RESULTS/ACTIONS
L4 CHECK CIRCUIT 57 (BK) FOR AN OPEN	
1 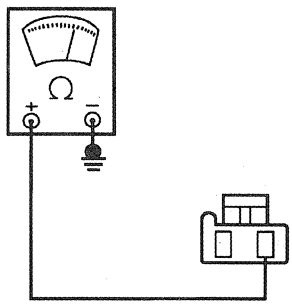 AR0261-A	1 Measure the resistance between the passenger seat module connector Pin C364-2, Circuit 57 (BK) and ground. • Is the resistance reading 5 ohms or less? → **Yes** REPLACE the passenger seat module. TEST the system for normal operation. → **No** REPAIR Circuit 57 (BK) for an open. TEST the system for normal operation.
L5 CHECK CIRCUIT 990 (Y/LB) FOR A SHORT TO GROUND	
1 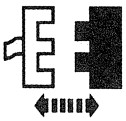 Passenger Seat Module Connector C357 2 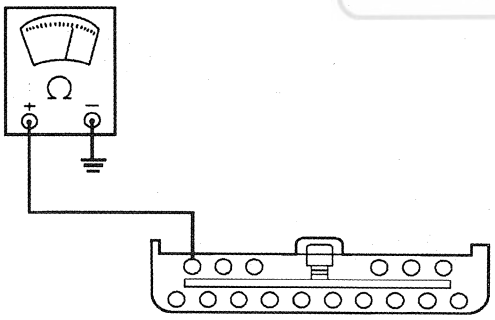 AR0226-B	2 Measure the resistance between the passenger seat module connector Pin C357-1, Circuit 990 (Y/LB) and ground. • Is the resistance reading 10 K ohms or less? → **Yes** GO to **L6**. → **No** GO to **L8**.

Official Licensed Product
Ford Motor Company

(Continued)

DIAGNOSIS AND TESTING (Continued)

PINPOINT TEST L: THE POWER SEAT IS INOPERATIVE—PASSENGER (Continued)

TEST CONDITIONS	TEST DETAILS/RESULTS/ACTIONS
L6 CHECK THE PASSENGER SEAT RECLINER MOTOR ASSEMBLY FOR A SHORT TO GROUND	
1 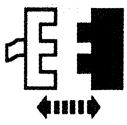 Passenger Seat Recliner Motor Connector C328 2 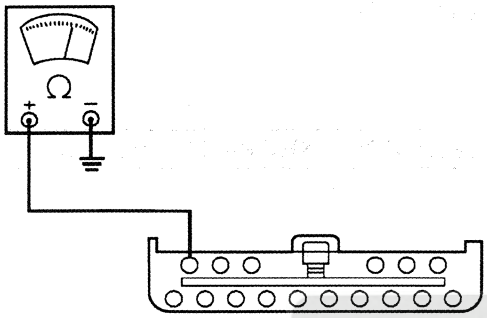 AR0226-B	2 Measure the resistance between the passenger seat module connector C357-1, Circuit 990 (Y/LB) and ground. • Is the resistance reading 10 K ohms or less? → **Yes** REPAIR Circuit 990 (Y/LB) for a short to ground. TEST the system for normal operation → **No** GO to **L7**.
L7 CHECK CIRCUIT 51 (BK/W) FOR A SHORT TO GROUND	
1 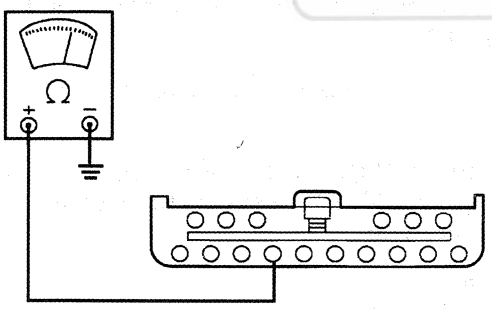 AR0229-B	1 Measure the resistance between the passenger seat module connector Pin C357-10, Circuit 51 (BK/W) and ground. • Is the resistance reading 10 K ohms or less? → **Yes** REPAIR Circuit 51 (BK/W) for a short to ground. TEST the system for normal operation → **No** REPLACE the passenger seat back latch. TEST the system for normal operation.

Official Licensed Product
Ford Motor Company

(Continued)

DIAGNOSIS AND TESTING (Continued)

PINPOINT TEST L: THE POWER SEAT IS INOPERATIVE—PASSENGER (Continued)

TEST CONDITIONS	TEST DETAILS/RESULTS/ACTIONS
L8 CHECK CIRCUIT 979 (R/LB) FOR A SHORT TO GROUND	
1 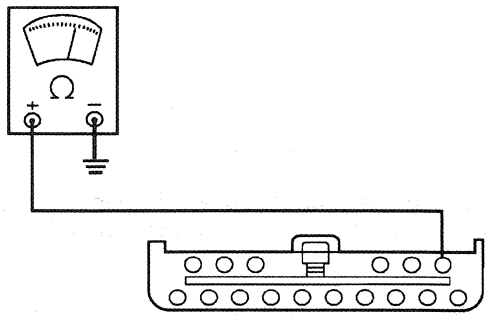 AR0240-B	1 Measure the resistance between the passenger seat module connector Pin C357-6, Circuit 979 (R/LB) and ground. • Is the resistance reading 10 K ohms or less? → **Yes** GO to **L9**. → **No** GO to **L11**.
L9 CHECK THE PASSENGER SEAT FRONT MOTOR ASSEMBLY FOR A SHORT TO GROUND	
1 Passenger Seat Motor Connector C331 2 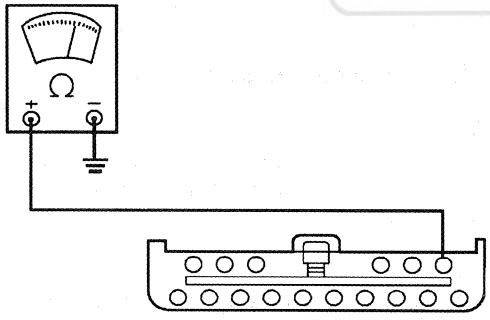 AR0240-B	2 Measure the resistance between the passenger seat module connector Pin C357-6, Circuit 979 (R/LB) and ground. • Is the resistance reading 10 K ohms or less? → **Yes** REPAIR Circuit 979 (R/LB) for a short to ground. TEST the system for normal operation. → **No** GO to **L10**.

Official Licensed Product
Ford Motor Company

(Continued)

DIAGNOSIS AND TESTING (Continued)

PINPOINT TEST L: THE POWER SEAT IS INOPERATIVE—PASSENGER (Continued)

TEST CONDITIONS	TEST DETAILS/RESULTS/ACTIONS
L10 CHECK CIRCUIT 978 (Y/LB) FOR A SHORT TO GROUND	
1 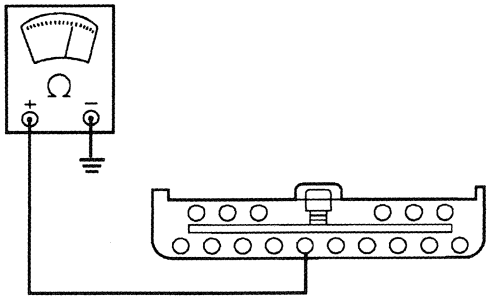 AR0237-B	1 Measure the resistance between the passenger seat module connector Pin C357-11, Circuit 978 (Y/LB) and ground. • Is the resistance reading 10 K ohms or less? → **Yes** REPAIR Circuit 978 (Y/LB) for a short to ground. TEST the system for normal operation. → **No** REPLACE the passenger seat track assembly. TEST the system for normal operation.
L11 CHECK CIRCUIT 983 (R/LG) FOR A SHORT TO GROUND	
1 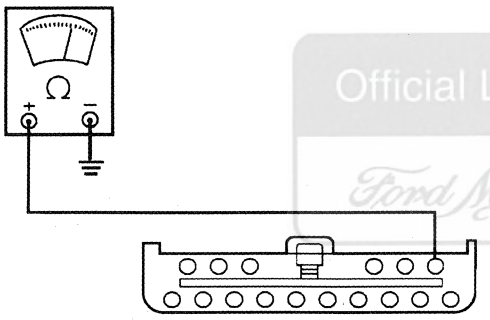 AR0240-B	1 Measure the resistance between the passenger seat module connector Pin C357-4, Circuit 983 (R/LG) and ground. • Is the resistance reading 10 K ohms or less? → **Yes** GO to **L12**. → **No** GO to **L14**.

Official Licensed Product
Ford Motor Company

(Continued)

DIAGNOSIS AND TESTING (Continued)

PINPOINT TEST L: THE POWER SEAT IS INOPERATIVE—PASSENGER (Continued)

TEST CONDITIONS	TEST DETAILS/RESULTS/ACTIONS
L12 CHECK THE PASSENGER SEAT REAR MOTOR ASSEMBLY FOR A SHORT TO GROUND	
1 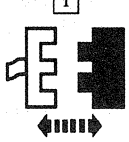 Passenger Seat Motor Connector C331 2 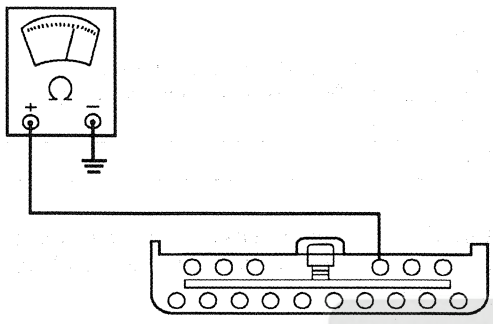 AR0251-B	2 Measure the resistance between the passenger seat module connector Pin C357-4, Circuit 983 (R/LG) and ground. • Is the resistance reading 10 K ohms or less? → **Yes** REPAIR Circuit 983 (R/LG) for a short to ground. TEST the system for normal operation. → **No** GO to **L13**.
L13 CHECK CIRCUIT 982 (Y/LG) FOR A SHORT TO GROUND	
1 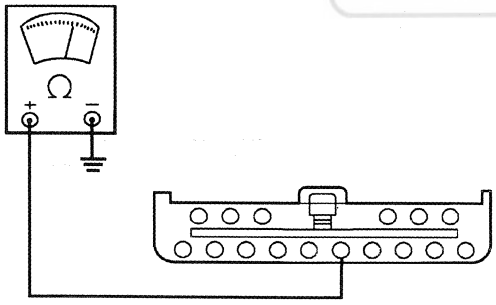 AR0248-B	1 Measure the resistance between the passenger seat module connector Pin C357-12, Circuit 982 (Y/LG) and ground. • Is the resistance reading 10 K ohms or less? → **Yes** REPAIR Circuit 982 (Y/LG) for a short to ground. TEST the system for normal operation. → **No** REPLACE the passenger seat track assembly. TEST the system for normal operation.

Official Licensed Product Ford Motor Company

(Continued)

DIAGNOSIS AND TESTING (Continued)

PINPOINT TEST L: THE POWER SEAT IS INOPERATIVE—PASSENGER (Continued)

TEST CONDITIONS	TEST DETAILS/RESULTS/ACTIONS
L14 CHECK CIRCUIT 981 (R/W) FOR A SHORT TO GROUND	
1 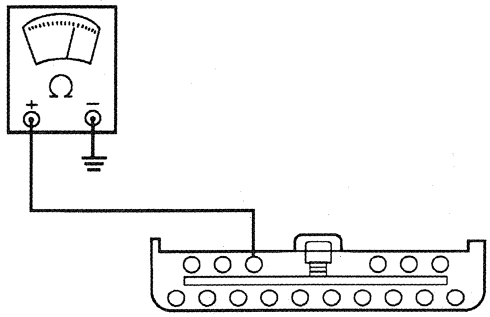 AR0218-B	1 Measure the resistance between the passenger seat module connector Pin C357-3, Circuit 981 (R/W) and ground. • Is the resistance reading 10 K ohms or less? → **Yes** GO to **L15**. → **No** GO to **L17**.
L15 CHECK THE PASSENGER SEAT HORIZONTAL MOTOR ASSEMBLY FOR A SHORT TO GROUND	
1 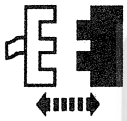 Passenger Seat Motor Connector C331 2 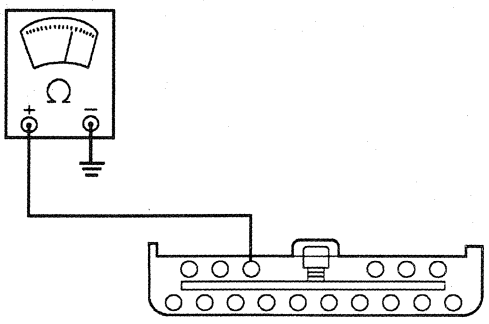 AR0218-B	2 Measure the resistance between the passenger seat module connector Pin C357-3, Circuit 981 (R/W) and ground. • Is the resistance reading 10 K ohms or less? → **Yes** REPAIR Circuit 981 (R/W) for a short to ground. TEST the system for normal operation. → **No** GO to **L16**.

(Continued)

Official Licensed Product
Ford Motor Company

DIAGNOSIS AND TESTING (Continued)

PINPOINT TEST L: THE POWER SEAT IS INOPERATIVE—PASSENGER (Continued)

TEST CONDITIONS	TEST DETAILS/RESULTS/ACTIONS
L16 CHECK CIRCUIT 980 (Y/W) FOR A SHORT TO GROUND	
1 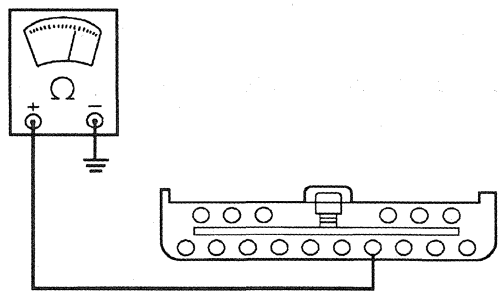 AR0215-B	1 Measure the resistance between the passenger seat module connector Pin C357-13, Circuit 980 (Y/W) and ground. • Is the resistance reading 10 K ohms or less? → **Yes** REPAIR Circuit 980 (Y/W) for a short to ground. TEST the system for normal operation. → **No** REPLACE the passenger seat track assembly. TEST the system for normal operation.
L17 CHECK PID SFWD__SW	
1 Passenger Seat Module Connector C336 2 Read Passenger Seat Module PID SFWD__SW 3 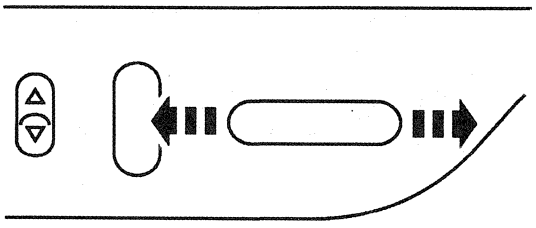 AR0081-A	3 Move the passenger seat regulator control switch to the FORWARD then REARWARD position while monitoring PID SFWD__SW. • Does PID SFWD__SW read FWD and RWD when the switch is pressed in the corresponding direction? → **Yes** REPLACE the passenger seat module. TEST the system for normal operation. → **No** GO to **L18**.

Official Licensed Product Ford Motor Company

(Continued)

DIAGNOSIS AND TESTING (Continued)

PINPOINT TEST L: THE POWER SEAT IS INOPERATIVE—PASSENGER (Continued)

TEST CONDITIONS	TEST DETAILS/RESULTS/ACTIONS
L18 CHECK CIRCUIT 785 (BK/LG) FOR VOLTAGE	
1 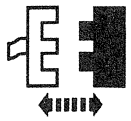 Passenger Seat Regulator Control Switch Connector C368 2 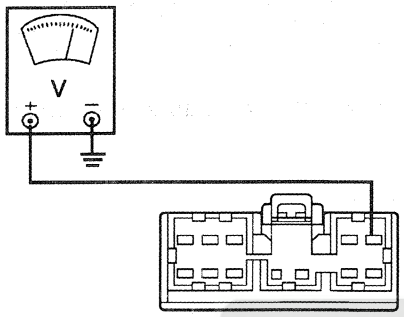 AR0182-B	2 Measure the voltage at the passenger seat regulator control switch connector Pin C368-5, Circuit 785 (BK/LG) and ground. • Is the voltage reading B+? → **Yes** REPLACE the passenger seat regulator control switch. TEST the system for normal operation. → **No** GO to **L19**.
L19 CHECK CIRCUIT 785 (BK/LG) AT THE PASSENGER SEAT MODULE	
1 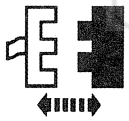 Passenger Seat Module Connector C320 2 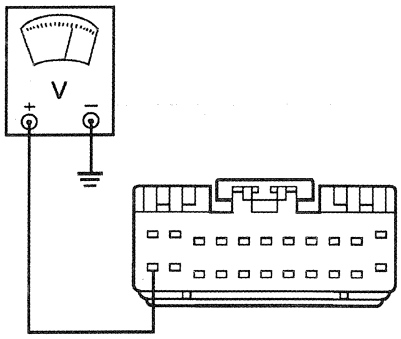 AR0396-B	2 Measure the voltage at the passenger seat module connector Pin C320-12, Circuit 785 (BK/LG) and ground. • Is the voltage reading B+? → **Yes** REPAIR Circuit 785 (BK/LG) for an open between the passenger seat regulator control switch and the harness splice. TEST the system for normal operation. → **No** GO to **L20**.

Official Licensed Product
Ford Motor Company

(Continued)

DIAGNOSIS AND TESTING (Continued)

PINPOINT TEST L: THE POWER SEAT IS INOPERATIVE—PASSENGER (Continued)

TEST CONDITIONS	TEST DETAILS/RESULTS/ACTIONS
L20 CHECK CIRCUIT 785 (BK/LG) FOR A SHORT TO GROUND	
1 Passenger Seat Module Connector C320 2 Fuse Junction Panel Fuse 12 (10A) 3 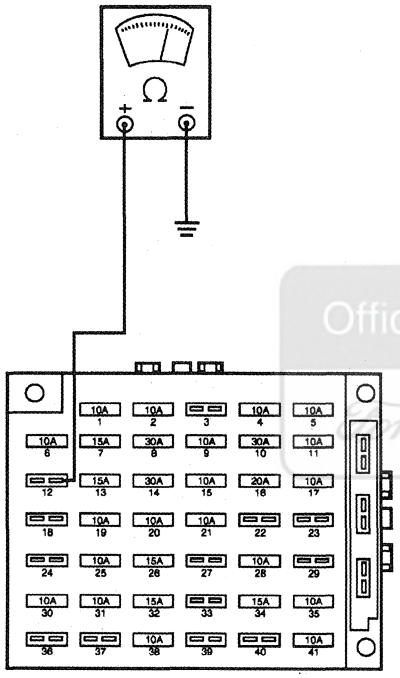 AR0394-A	3 Measure the resistance between the output side of fuse junction panel Fuse 12 (10A), Circuit 785 (BK/LG) and ground. • Is the resistance reading 10 K ohms or less? → **Yes** GO to **L21**. → **No** GO to **L23**.

Official Licensed Product
Ford Motor Company

(Continued)

DIAGNOSIS AND TESTING (Continued)

PINPOINT TEST L: THE POWER SEAT IS INOPERATIVE—PASSENGER (Continued)

TEST CONDITIONS	TEST DETAILS/RESULTS/ACTIONS
L21 CHECK THE PASSENGER SEAT MODULE FOR A SHORT TO GROUND	
1 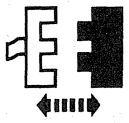 Passenger Seat Module Connector C320 2 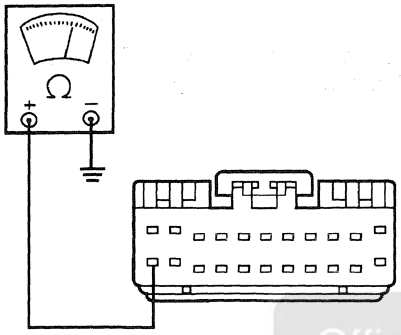 AR0397-B	2 Measure the resistance between the passenger seat module connector Pin C320-12, Circuit 785 (BK/LG) and ground. • Is the resistance reading 10 K ohms or less? → **Yes** GO to **L22**. → **No** REPLACE the passenger seat module. TEST the system for normal operation.
L22 CHECK THE PASSENGER SEAT REGULATOR CONTROL SWITCH FOR A SHORT TO GROUND	
1 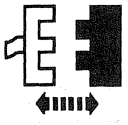 Passenger Seat Regulator Control Switch Connector C368 2 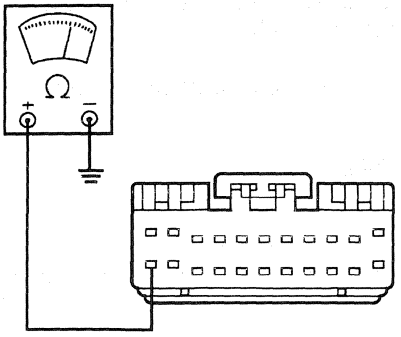 AR0397-B	2 Measure the resistance between the passenger seat module connector Pin C320-12, Circuit 785 (BK/LG) and ground. • Is the resistance reading 10 K ohms or less? → **Yes** REPAIR Circuit 785 (BK/LG) for a short to ground. TEST the system for normal operation. → **No** REPLACE the passenger seat regulator control switch. TEST the system for normal operation.

Official Licensed Product
Ford Motor Company

(Continued)

DIAGNOSIS AND TESTING (Continued)

PINPOINT TEST L: THE POWER SEAT IS INOPERATIVE—PASSENGER (Continued)

TEST CONDITIONS	TEST DETAILS/RESULTS/ACTIONS
L23 CHECK CIRCUIT 785 (BK/LG) FOR AN OPEN	
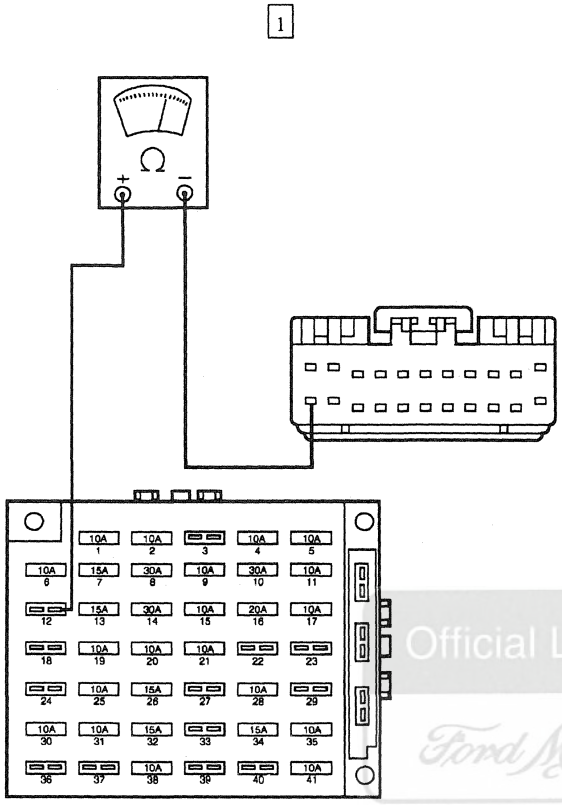 AR0395-B	1 Measure the resistance of Circuit 785 (BK/LG) between the output side of fuse junction panel Fuse 12 (10A) and the passenger seat module connector Pin C320-12. • Is the resistance reading 5 ohms or less? → **Yes** REPAIR Circuit 517 (BK/W) for an open. TEST the system for normal operation. → **No** REPAIR Circuit 785 (BK/LG) for an open. TEST the system for normal operation.

Official Licensed Product
Ford Motor Company

PINPOINT TEST M: THE POWER SEAT DOES NOT MOVE HORIZONTALLY—DRIVER

TEST CONDITIONS	TEST DETAILS/RESULTS/ACTIONS
M1 CHECK SEAT OPERATION	
	1 Adjust the driver seat using the driver seat regulator control switch. • Does any driver seat adjustment operate? → **Yes** GO to **M2**. → **No** GO to Pinpoint Test K.

(Continued)

DIAGNOSIS AND TESTING (Continued)

PINPOINT TEST M: THE POWER SEAT DOES NOT MOVE HORIZONTALLY—DRIVER (Continued)

TEST CONDITIONS	TEST DETAILS/RESULTS/ACTIONS
M2 CHECK PID SFWD__SW	
1 NGS 2 Read DSM PID SFWD__SW 3 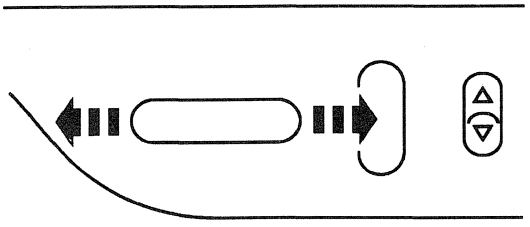 AR0301-A	3 Press the driver seat regulator control switch to the FORWARD position then the REARWARD position while monitoring PID SFWD__SW. • Does PID SFWD__SW change from FWD to RWD as the switch is pressed? → **Yes** GO to **M9**. → **No** GO to **M3**.
M3 CHECK CIRCUIT 986 (Y/W) FOR VOLTAGE	
1 DSM Connector C350 2 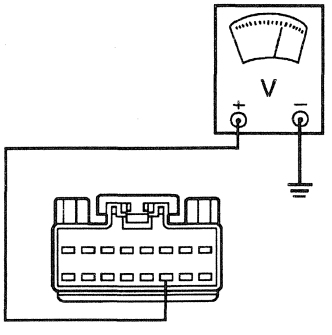 AR0070-B	2 Measure the voltage at the DSM connector Pin C350-14, Circuit 986 (Y/W) and ground.

Official Licensed Product
Ford Motor Company

(Continued)

DIAGNOSIS AND TESTING (Continued)

PINPOINT TEST M: THE POWER SEAT DOES NOT MOVE HORIZONTALLY—DRIVER (Continued)

TEST CONDITIONS	TEST DETAILS/RESULTS/ACTIONS
M3 CHECK CIRCUIT 986 (Y/W) FOR VOLTAGE (Continued)	
3 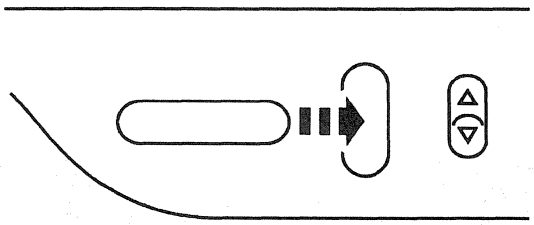 AR0099-A	3 Press the driver seat regulator control switch to the REARWARD position. • Is the voltage reading B+? → **Yes** GO to **M6**. → **No** GO to **M4**.
M4 CHECK CIRCUIT 986 (Y/W) FOR AN OPEN	
1 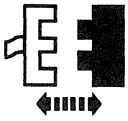 Driver Seat Regulator Control Switch Connector C367 2 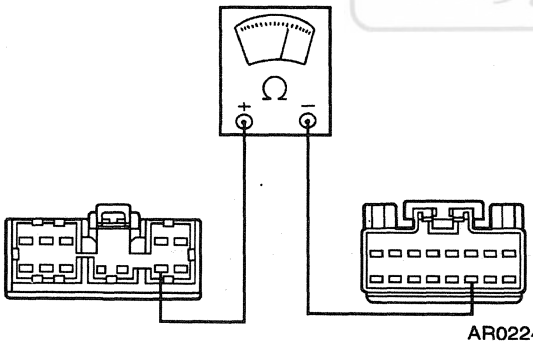 AR0224-B	2 Measure the resistance of Circuit 986 (Y/W) between the driver seat regulator control switch connector Pin C367-11 and the DSM connector Pin C350-14. • Is the resistance reading 5 ohms or less? → **Yes** GO to **M5**. → **No** REPAIR Circuit 986 (Y/W) for an open. TEST the system for normal operation.

Official Licensed Product
Ford Motor Company

(Continued)

DIAGNOSIS AND TESTING (Continued)

PINPOINT TEST M: THE POWER SEAT DOES NOT MOVE HORIZONTALLY—DRIVER (Continued)

TEST CONDITIONS	TEST DETAILS/RESULTS/ACTIONS
M5 CHECK CIRCUIT 986 (Y/W) FOR A SHORT TO GROUND	
1 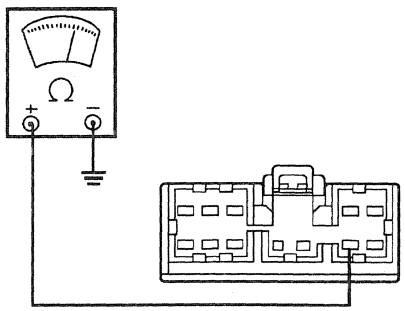 AR0223-B	1 Measure the resistance between the driver seat regulator control switch connector Pin C367-11, Circuit 986 (Y/W) and ground. • Is the resistance reading 10 K ohms or less? → **Yes** REPAIR Circuit 986 (Y/W) for a short to ground. TEST the system for normal operation → **No** REPLACE the driver seat regulator control switch. TEST the system for normal operation.
M6 CHECK CIRCUIT 987 (R/W) FOR VOLTAGE	
1 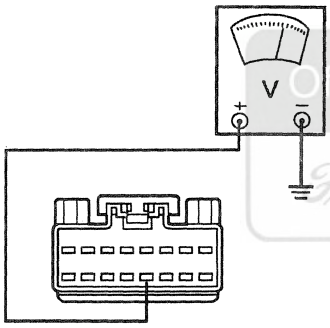 AR0071-B	1 Measure the voltage at the DSM connector Pin C350-13, Circuit 987 (R/W) and ground.
2 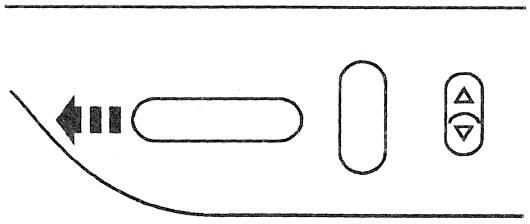 AR0100-A	2 Press the driver seat regulator control switch to the FORWARD position. • Is the voltage reading B+? → **Yes** REPLACE the driver seat module. TEST the system for normal operation. → **No** GO to M7.

Official Licensed Product
Ford Motor Company

(Continued)

DIAGNOSIS AND TESTING (Continued)

PINPOINT TEST M: THE POWER SEAT DOES NOT MOVE HORIZONTALLY—DRIVER (Continued)

TEST CONDITIONS	TEST DETAILS/RESULTS/ACTIONS
M 7 CHECK CIRCUIT 987 (R/W) FOR AN OPEN	
1 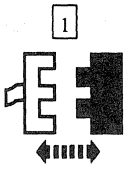 Driver Seat Regulator Control Switch Connector C367 2 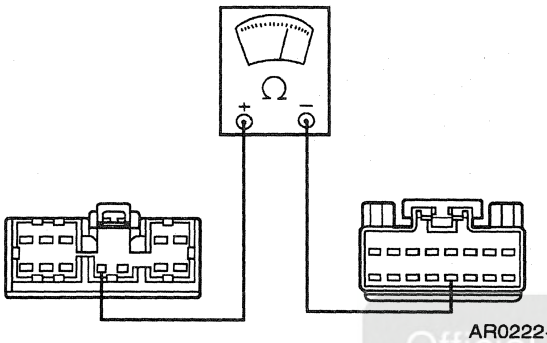 AR0222-B	2 Measure the resistance of Circuit 987 (R/W) between the driver seat regulator control switch connector Pin C367-9 and the DSM connector Pin C350-13. • Is the resistance reading 5 ohms or less? → **Yes** GO to **M8.** → **No** REPAIR Circuit 987 (R/W) for an open. TEST the system for normal operation.
M 8 CHECK CIRCUIT 987 (R/W) FOR A SHORT TO GROUND	
1 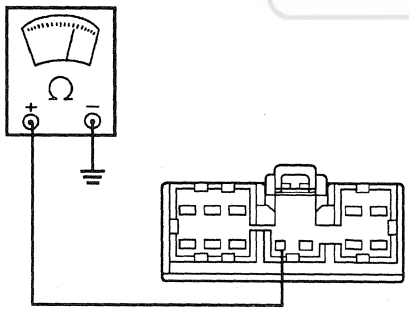 AR0221-B	1 Measure the resistance between the driver seat regulator control switch connector Pin C367-9, Circuit 987 (R/W) and ground. • Is the resistance reading 10 K ohms or less? → **Yes** REPAIR Circuit 987 (R/W) for a short to ground. TEST the system for normal operation. → **No** REPLACE the driver seat regulator control switch. TEST the system for normal operation.

Official Licensed Product
Ford Motor Company

(Continued)

DIAGNOSIS AND TESTING (Continued)

PINPOINT TEST M: THE POWER SEAT DOES NOT MOVE HORIZONTALLY—DRIVER (Continued)

TEST CONDITIONS	TEST DETAILS/RESULTS/ACTIONS
M9 CHECK THE DRIVER SEAT HORIZONTAL MOTOR	
1 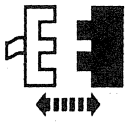 Driver Seat Motor Connector C351	
2 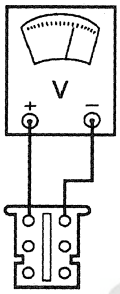 AR0220-B	2 Measure the voltage between the driver seat motor connector Pin C351-6, Circuit 981 (R/W) and Pin C351-5, Circuit 980 (Y/W).
3 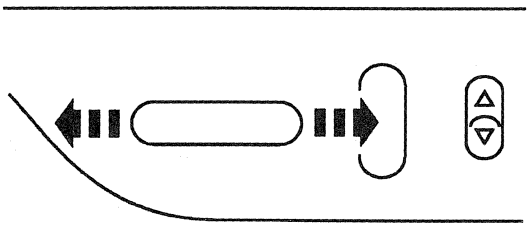 AR0301-A	3 Press the driver seat regulator control to the FORWARD or the REARWARD position. • Is the voltage reading reading B+? → **Yes** REPLACE the driver seat track assembly. TEST the system for normal operation. → **No** GO to **M10**.

Official Licensed Product
Ford Motor Company®

(Continued)

DIAGNOSIS AND TESTING (Continued)

PINPOINT TEST M: THE POWER SEAT DOES NOT MOVE HORIZONTALLY—DRIVER (Continued)

TEST CONDITIONS	TEST DETAILS/RESULTS/ACTIONS
M 10 CHECK CIRCUIT 981 (R/W) FOR AN OPEN	
1 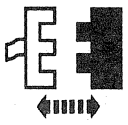 DSM Connector C355 2 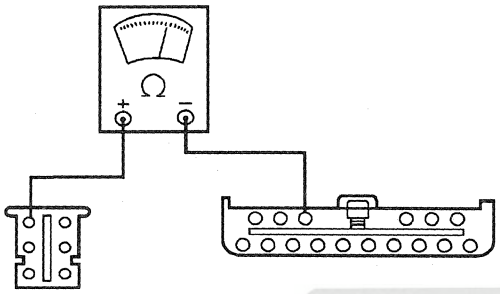 AR0217-B	2 Measure the resistance of Circuit 981 (R/W) between the DSM connector Pin C355-3 and the driver seat motor connector Pin C351-6. • Is the resistance reading 5 ohms or less? → **Yes** GO to **M11**. → **No** REPAIR Circuit 981 (R/W) for an open. TEST the system for normal operation.
M 11 CHECK CIRCUIT 980 (Y/W) FOR AN OPEN	
1 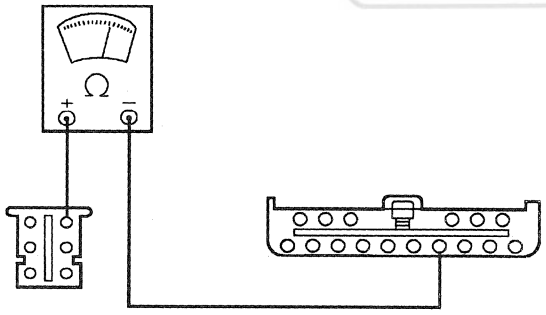 AR0214-B	1 Measure the resistance of Circuit 980 (Y/W) between the DSM connector Pin C355-13 and the driver seat motor connector Pin C351-5. • Is the resistance reading 5 ohms or less? → **Yes** REPLACE the driver seat module. TEST the system for normal operation. → **No** REPAIR Circuit 980 (Y/W) for an open. TEST the system for normal operation.

Official Licensed Product
Ford Motor Company

DIAGNOSIS AND TESTING (Continued)

PINPOINT TEST N: THE POWER SEAT DOES NOT MOVE HORIZONTALLY—PASSENGER

TEST CONDITIONS	TEST DETAILS/RESULTS/ACTIONS
N1 CHECK SEAT OPERATION	
	1 Adjust the passenger seat using the passenger seat regulator control switch. • Does any passenger seat adjustment operate? → **Yes** GO to **N2**. → **No** GO to Pinpoint Test L.
N2 CHECK PID SFWD__SW	
1 NGS 2 Read Passenger Seat Module PID SFWD__SW 3 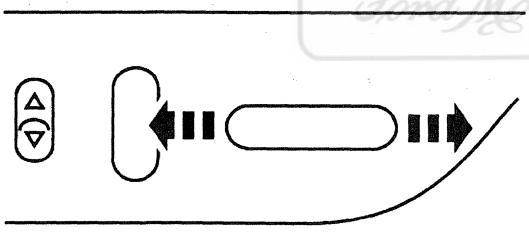 AR0081-A	3 Press the passenger seat regulator control switch to the FORWARD position then the REARWARD position while monitoring PID SFWD__SW. • Does PID SFWD__SW change from FWD to RWD as the switch is pressed? → **Yes** GO to **N9**. → **No** GO to **N3**.

Official Licensed Product
Ford Motor Company

(Continued)

DIAGNOSIS AND TESTING (Continued)

PINPOINT TEST N: THE POWER SEAT DOES NOT MOVE HORIZONTALLY—PASSENGER (Continued)

TEST CONDITIONS	TEST DETAILS/RESULTS/ACTIONS
N3 CHECK CIRCUIT 986 (Y/W) FOR VOLTAGE	
1 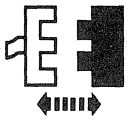 Passenger Seat Module Connector C336	
2 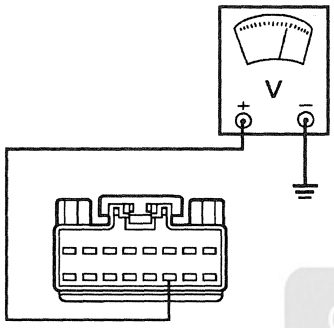 AR0070-B	2 Measure the voltage at the passenger seat module connector Pin C357-14, Circuit 986 (Y/W) and ground.
3 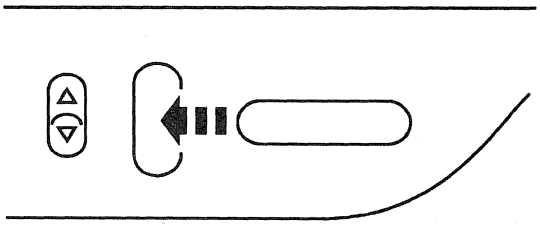 AR0082-A	3 Press the passenger seat regulator control switch to the REARWARD position. • Is the voltage reading B+? → **Yes** GO to **N6**. → **No** GO to **N4**.

Official Licensed Product
Ford Motor Co.

(Continued)

DIAGNOSIS AND TESTING (Continued)

PINPOINT TEST N: THE POWER SEAT DOES NOT MOVE HORIZONTALLY—PASSENGER (Continued)

TEST CONDITIONS	TEST DETAILS/RESULTS/ACTIONS
N4 CHECK CIRCUIT 986 (Y/W) FOR AN OPEN	
1 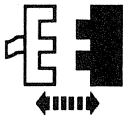 Passenger Seat Regulator Control Switch Connector C368 2 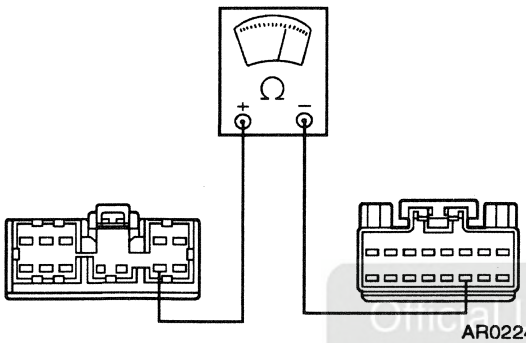 AR0224-B	2 Measure the resistance of Circuit 986 (Y/W) between the passenger seat regulator control switch connector Pin C368-11 and the passenger seat module connector Pin C336-14. • Is the resistance reading 5 ohms or less? → **Yes** GO to **N5**. → **No** REPAIR Circuit 986 (Y/W) for an open. TEST the system for normal operation.
N5 CHECK CIRCUIT 986 (Y/W) FOR A SHORT TO GROUND	
1 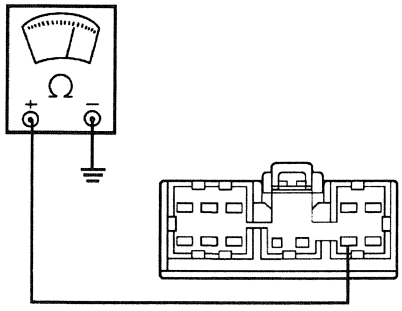 AR0223-B	1 Measure the resistance between the passenger seat regulator control switch connector Pin C368-11, Circuit 986 (Y/W) and ground. • Is the resistance reading 10 K ohms or less? → **Yes** REPAIR Circuit 986 (Y/W) for a short to ground. TEST the system for normal operation. → **No** REPLACE the passenger seat regulator control switch. TEST the system for normal operation.

(Continued)

Officer Licensed Product Ford Motor Company

DIAGNOSIS AND TESTING (Continued)

PINPOINT TEST N: THE POWER SEAT DOES NOT MOVE HORIZONTALLY—PASSENGER (Continued)

TEST CONDITIONS	TEST DETAILS/RESULTS/ACTIONS
N6 CHECK CIRCUIT 987 (R/W) FOR VOLTAGE	
1 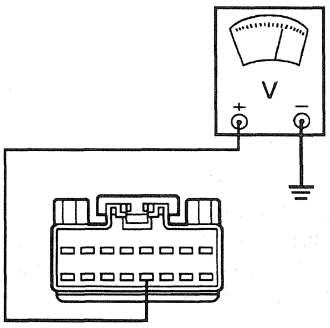 AR0071-B	1 Measure the voltage at the passenger seat module connector Pin C336-13, Circuit 987 (R/W) and ground.
2 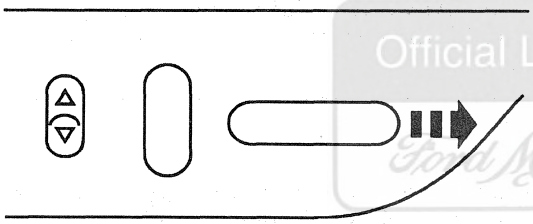 AR0083-A	2 Press the passenger seat regulator control switch to the FORWARD position. • Is the voltage reading B+? → **Yes** REPLACE the passenger seat module. TEST the system for normal operation. → **No** GO to **N7**.

Official Licensed Product
Ford Motor Company

(Continued)

DIAGNOSIS AND TESTING (Continued)

PINPOINT TEST N: THE POWER SEAT DOES NOT MOVE HORIZONTALLY—PASSENGER (Continued)

TEST CONDITIONS	TEST DETAILS/RESULTS/ACTIONS
N7 CHECK CIRCUIT 987 (R/W) FOR AN OPEN	
1 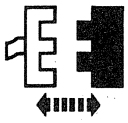 Passenger Seat Regulator Control Switch Connector C368 2 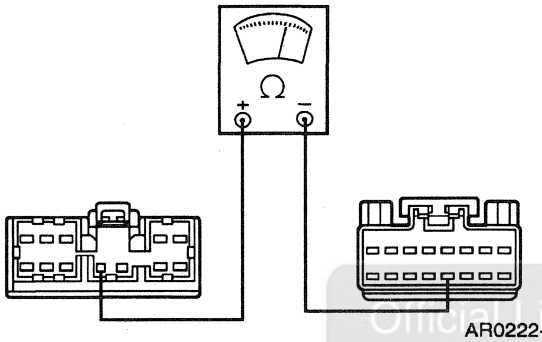 AR0222-B	2 Measure the resistance of Circuit 987 (R/W) between the passenger seat regulator control switch connector Pin C368-9 and the passenger seat module connector Pin C336-13. • Is the resistance reading 5 ohms or less? → **Yes** GO to **N8**. → **No** REPAIR Circuit 987 (R/W) for an open. TEST the system for normal operation.
N8 CHECK CIRCUIT 987 (R/W) FOR A SHORT TO GROUND	
1 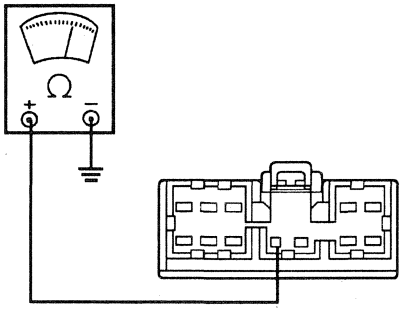 AR0221-B	1 Measure the resistance between the passenger seat regulator control switch connector Pin C368-9, Circuit 987 (R/W) and ground. • Is the resistance reading 10 K ohms or less? → **Yes** REPAIR Circuit 987 (R/W) for a short to ground. TEST the system for normal operation. → **No** REPLACE the passenger seat regulator control switch. TEST the system for normal operation.

(Continued)

Official Licensed Product Ford Motor Company

DIAGNOSIS AND TESTING (Continued)

PINPOINT TEST N: THE POWER SEAT DOES NOT MOVE HORIZONTALLY—PASSENGER (Continued)

TEST CONDITIONS	TEST DETAILS/RESULTS/ACTIONS
N9 CHECK THE PASSENGER SEAT HORIZONTAL MOTOR	
1 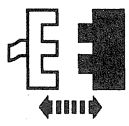 Passenger Seat Motor Connector C331	
2 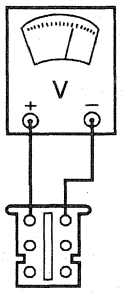 AR0220-B	2 Measure the voltage at the passenger seat motor connector Pin C331-6, Circuit 981 (R/W) and Pin C331-5, Circuit 980 (Y/W).
3 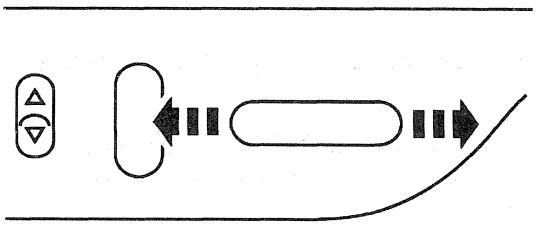 AR0081-A	3 Press the passenger seat regulator control to the FORWARD or REARWARD position. • Is the voltage reading B+? → **Yes** REPLACE the passenger seat track assembly. TEST the system for normal operation. → **No** GO to **N10**.

Official Licensed Product
Ford Motor Co.

(Continued)

DIAGNOSIS AND TESTING (Continued)

PINPOINT TEST N: THE POWER SEAT DOES NOT MOVE HORIZONTALLY—PASSENGER (Continued)

TEST CONDITIONS	TEST DETAILS/RESULTS/ACTIONS
N10 CHECK CIRCUIT 981 (R/W) FOR AN OPEN	
1 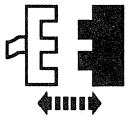 Passenger Seat Module Connector C357 2 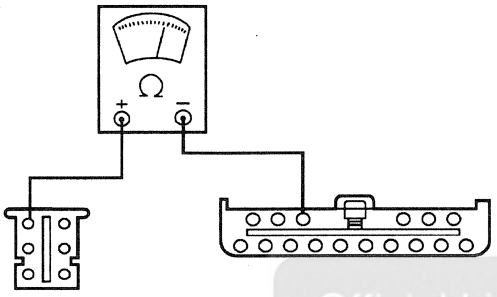 AR0217-B	2 Measure the resistance of Circuit 981 (R/W) between the passenger seat module connector Pin C357-3 and the passenger seat motor connector Pin C331-6. • Is the resistance reading 5 ohms or less? → **Yes** GO to **N11.** → **No** REPAIR Circuit 981 (R/W) for an open. TEST the system for normal operation.
N11 CHECK CIRCUIT 980 (Y/W) FOR AN OPEN	
1 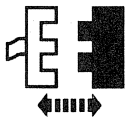 Passenger Seat Module Connector C336 2 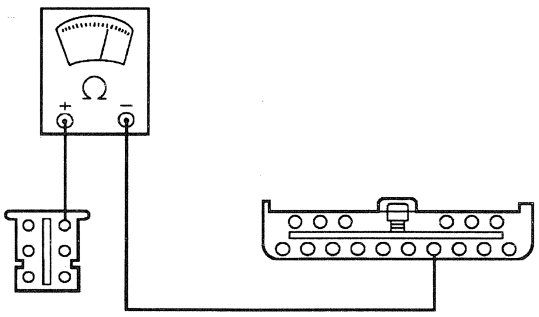 AR0214-B	2 Measure the resistance of Circuit 980 (Y/W) between the passenger seat module connector Pin C357-13 and the passenger seat motor connector Pin C331-5. • Is the resistance reading 5 ohms or less? → **Yes** REPLACE the passenger seat module. TEST the system for normal operation. → **No** REPAIR Circuit 980 (Y/W) for an open. TEST the system for normal operation.

Official Licensed Product
Ford Motor Company

DIAGNOSIS AND TESTING (Continued)

PINPOINT TEST P: THE POWER SEAT DOES NOT MOVE VERTICALLY—DRIVER

TEST CONDITIONS	TEST DETAILS/RESULTS/ACTIONS
P1 CHECK SEAT OPERATION	
	1 Adjust the driver seat using the driver seat regulator control switch. • Does any driver seat adjustment operate? → **Yes** GO to **P2**. → **No** GO to Pinpoint Test K.
P2 CHECK PID SREARSW	
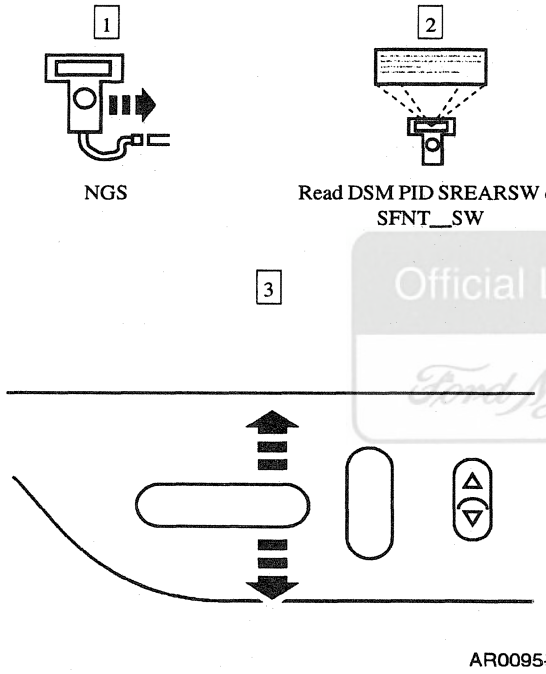	3 Press the driver seat regulator control switch to the rear up position then rear down position while monitoring PID SREARSW or to the front UP then front DOWN position while monitoring PID SFNT__SW. • Does the PID change from UP to DOWN as switch is pressed? → **Yes** GO to **P9**. → **No** GO to **P3**.

Official Licensed Product
Ford Motor Company

(Continued)

DIAGNOSIS AND TESTING (Continued)

PINPOINT TEST P: THE POWER SEAT DOES NOT MOVE VERTICALLY—DRIVER (Continued)

TEST CONDITIONS	TEST DETAILS/RESULTS/ACTIONS
P3 CHECK CIRCUIT 988 (Y/LG) FOR VOLTAGE	
1 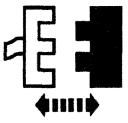 DSM Connector C350	
2 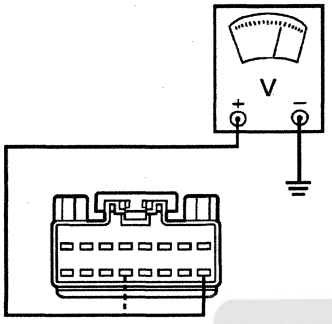 AR0911-A	2 Measure the voltage at the DSM connector Pin C350-16, Circuit 988 (Y/LG) for the rear or Pin C350-12, Circuit 984 (Y/LB) for the front.
3 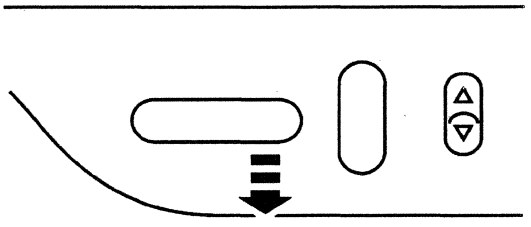 AR0093-A	3 Press the driver seat regulator control switch to the rear DOWN position for the rear or front DOWN position for the front. • Is the voltage reading B+? → **Yes** GO to **P6**. → **No** GO to **P4**.

Official Licensed Product
Ford Motor Company

(Continued)

DIAGNOSIS AND TESTING (Continued)

PINPOINT TEST P: THE POWER SEAT DOES NOT MOVE VERTICALLY—DRIVER (Continued)

TEST CONDITIONS	TEST DETAILS/RESULTS/ACTIONS
P4 CHECK CIRCUIT 988 (Y/LG) FOR AN OPEN	
1 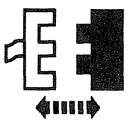 Driver Seat Regulator Control Switch Connector C367 2 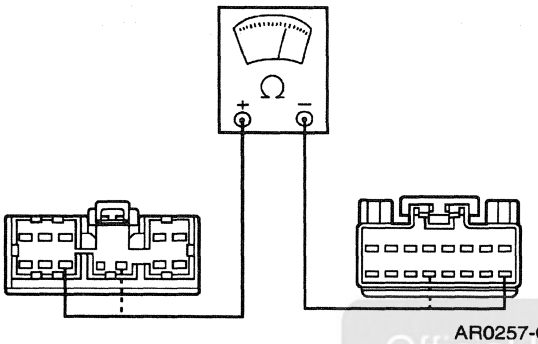 AR0257-C	2 Measure the resistance between the driver seat regulator control switch Connector C367 and the DSM Connector C350: **Switch Connector Pin** / **Module Connector Pin** / **Circuit** Rear C367-8 / C350-16 / 988 (Y/LG) Front C367-10 / C350-12 / 984 (Y/LB) • Is the resistance reading 5 ohms or less? → **Yes** GO to **P5**. → **No** REPAIR Circuit 988 (Y/LG) or Circuit 984 (Y/LB) for an open. TEST the system for normal operation.
P5 CHECK CIRCUIT 988 (Y/LG) FOR A SHORT TO GROUND	
1 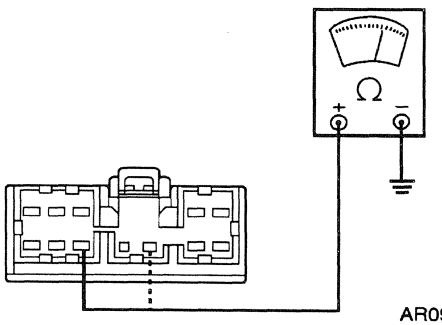 AR0906-A	1 Measure the resistance between the driver seat regulator control switch connector Pin C367-8, Circuit 988 (Y/LG) for the rear or Pin C367-10, Circuit 984 (Y/LB) for the front. • Is the resistance reading 10 K ohms or less? → **Yes** REPAIR Circuit 988 (Y/LG) or Circuit 984 (Y/LB) for a short to ground. TEST the system for normal operation. → **No** REPLACE the driver seat regulator control switch. TEST the system for normal operation.

Official Licensed Product
Ford Motor Company

(Continued)

DIAGNOSIS AND TESTING (Continued)

PINPOINT TEST P: THE POWER SEAT DOES NOT MOVE VERTICALLY—DRIVER (Continued)

TEST CONDITIONS	TEST DETAILS/RESULTS/ACTIONS
P6 CHECK CIRCUIT 989 (R/LG) FOR VOLTAGE	
1 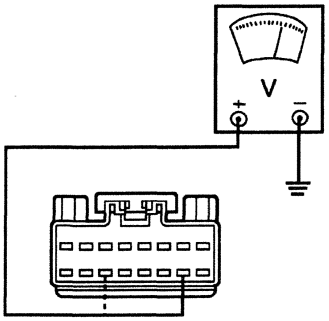 AR0913-A	1 Measure the voltage at the DSM connector Pin C350-15, Circuit 989 (R/LG) for the rear or Pin C350-11, Circuit 985 (R/LB) for the front.
2 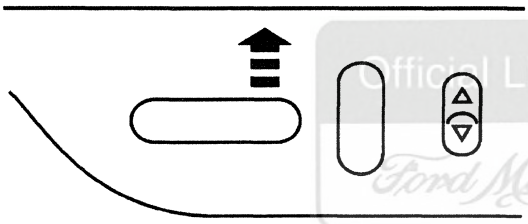 AR0094-A	2 Press the driver seat regulator control switch to the rear UP position. • Is the voltage reading B+? → **Yes** REPLACE the driver seat module. TEST the system for normal operation. → **No** GO to **P7**.

Official Licensed Product
Ford Motor Company®

(Continued)

DIAGNOSIS AND TESTING (Continued)

PINPOINT TEST P: THE POWER SEAT DOES NOT MOVE VERTICALLY—DRIVER (Continued)

TEST CONDITIONS	TEST DETAILS/RESULTS/ACTIONS
P7 CHECK CIRCUIT 989 (R/LG) FOR AN OPEN	
1 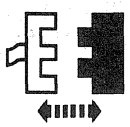 Driver Seat Regulator Control Switch Connector C367 2 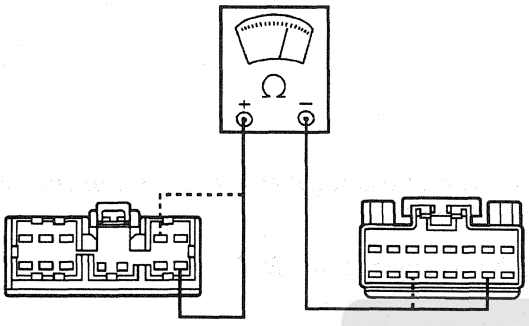 AR0255-C	2 Measure the resistance between the driver seat regulator control switch Connector C367 and the DSM Connector C350: **Switch Connector Pin** / **Module Connector Pin** / **Circuit** Rear C367-12 / C350-15 / 989 (R/LG) Front C367-4 / C350-11 / 985 (R/LB) • Is the resistance reading 5 ohms or less? → **Yes** GO to **P8**. → **No** REPAIR Circuit 989 (R/LG) or Circuit 985 (R/LB) for an open. TEST the system for normal operation.
P8 CHECK CIRCUIT 989 (R/LG) FOR A SHORT TO GROUND	
1 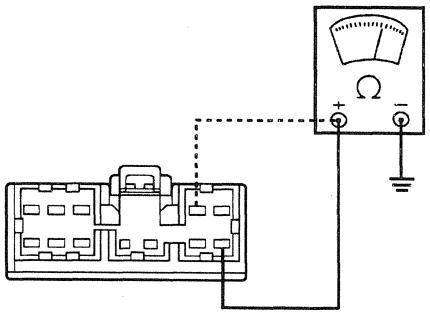 AR0921-A	1 Measure the resistance between the driver seat regulator control switch connector Pin C367-12, Circuit 989 (R/LG) for the rear or Pin C367-4, Circuit 985 (R/LB) for the front and ground. • Is the resistance reading 10 K ohms or less? → **Yes** REPAIR Circuit 989 (R/LG) or Circuit 985 (R/LB) for a short to ground. TEST the system for normal operation. → **No** REPLACE the driver seat regulator control switch. TEST the system for normal operation.

Official Licensed Product
Ford Motor Company

(Continued)

DIAGNOSIS AND TESTING (Continued)

PINPOINT TEST P: THE POWER SEAT DOES NOT MOVE VERTICALLY—DRIVER (Continued)

TEST CONDITIONS	TEST DETAILS/RESULTS/ACTIONS
P9 CHECK THE DRIVER SEAT REAR MOTOR	

1

Driver Seat Motor Connector C351

2

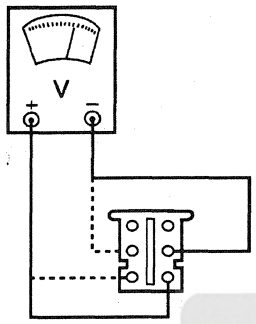

AR0910-A

2 Measure the voltage between the driver seat motor connector Pins:

Rear	Front
Pin C351-3, Circuit 983 (R/LG) and Pin C351-1, Circuit 982 (Y/LG)	Pin C351-2, Circuit 979 (R/LB) and Pin C351-4, Circuit 978 (Y/LB)

Official Licensed Product
Ford Motor Company

3

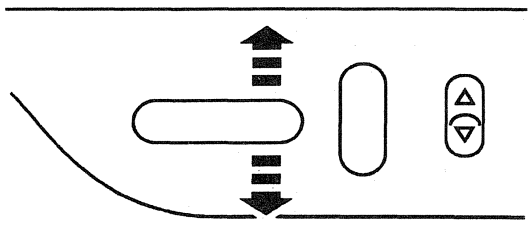

AR0095-A

3 Press the driver seat regulator control to the rear UP or rear DOWN position.

- Is the voltage reading B+?

→ **Yes**
REPLACE the driver seat track assembly. TEST the system for normal operation.

→ **No**
GO to **P10**.

(Continued)

DIAGNOSIS AND TESTING (Continued)

PINPOINT TEST P: THE POWER SEAT DOES NOT MOVE VERTICALLY—DRIVER (Continued)

TEST CONDITIONS	TEST DETAILS/RESULTS/ACTIONS
P10 CHECK CIRCUIT 983 (R/LG) FOR AN OPEN	
1 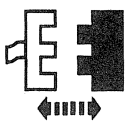 DSM Connector C355 2 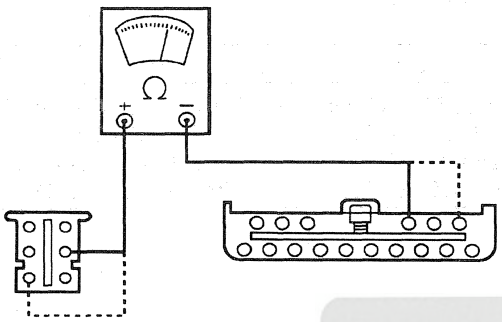 AR0250-C	2 Measure the resistance between the DSM Connector C355 and the driver seat motor Connector C351: **Module Connector Pin** / **Motor Connector Pin** / **Circuit** Rear C355-4 / C351-3 / 983 (R/LG) Front C355-6 / C351-2 / 979 (R/LB) • Is the resistance reading 5 ohms or less? → **Yes** GO to **P11**. → **No** REPAIR Circuit 983 (R/LG) or Circuit 979 (R/LB) for an open. TEST the system for normal operation.
P11 CHECK CIRCUIT 982 (Y/LG) FOR AN OPEN	
1 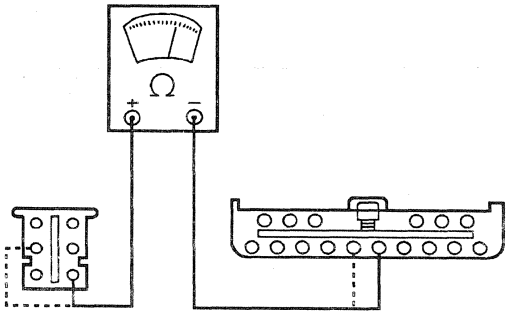 AR0247-C	1 Measure the resistance between the DSM Connector C355 and the driver seat motor Connector C351: **Module Connector Pin** / **Motor Connector Pin** / **Circuit** Rear C355-12 / C351-1 / 982 (Y/LG) Front C355-11 / C351-4 / 978 (Y/LB)

(Continued)

Official Licensed Product
Ford Motor Company

DIAGNOSIS AND TESTING (Continued)

PINPOINT TEST P: THE POWER SEAT DOES NOT MOVE VERTICALLY—DRIVER (Continued)

TEST CONDITIONS	TEST DETAILS/RESULTS/ACTIONS
P11 CHECK CIRCUIT 982 (Y/LG) FOR AN OPEN (Continued)	
	• Is the resistance reading 5 ohms or less? → **Yes** REPLACE the driver seat module. TEST the system for normal operation. → **No** REPAIR Circuit 982 (Y/LG) or Circuit 978 (Y/LB) for an open. TEST the system for normal operation.

PINPOINT TEST Q:THE POWER SEAT DOES NOT MOVE VERTICALLY—PASSENGER

TEST CONDITIONS	TEST DETAILS/RESULTS/ACTIONS
Q1 CHECK SEAT OPERATION	
	1 Adjust the passenger seat using the passenger seat regulator control switch. • Does any passenger seat adjustment operate? → **Yes** GO to **Q2**. → **No** GO to Pinpoint Test L.
Q2 CHECK PID SREARSW	
1 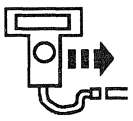 NGS 2 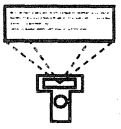 Monitor Passenger Seat Module PID SREARSW or SFNT__SW 3 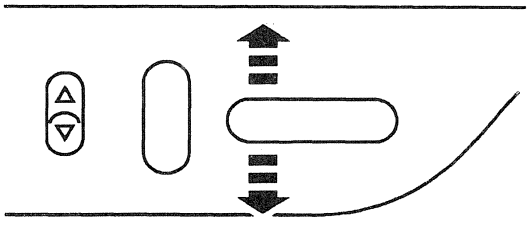 AR0086-A	3 Press the passenger seat regulator control switch to the rear UP position then rear DOWN position while monitoring PID SREARSW or to the front UP position then the front DOWN position while monitoring PID SFNT__SW. • Does the PID change from UP to DOWN as the switch is pressed? → **Yes** GO to **Q9**. → **No** GO to **Q3**.

(Continued)

Official Licensed Product Ford Motor Company

DIAGNOSIS AND TESTING (Continued)

PINPOINT TEST Q: THE POWER SEAT DOES NOT MOVE VERTICALLY—PASSENGER (Continued)

TEST CONDITIONS	TEST DETAILS/RESULTS/ACTIONS
Q3 CHECK CIRCUIT 988 (Y/LG) FOR VOLTAGE	
1 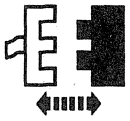 Passenger Seat Module Connector C336	
2 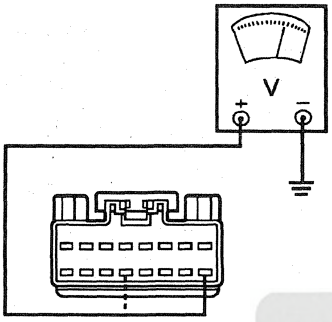 AR0911-A	2 Measure the voltage at the passenger seat module connector Pin C336-16, Circuit 988 (Y/LG) for the rear or Pin C336-12, Circuit 984 (Y/LB) for the front.
3 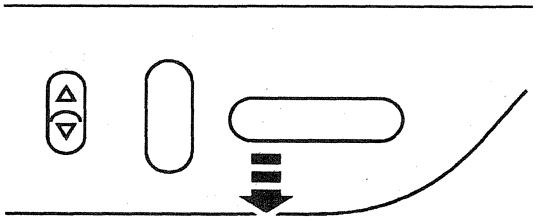 AR0085-A	3 Press the passenger seat regulator control switch to the rear DOWN position for the rear or the front DOWN position for the front. • Is the voltage reading B+? → **Yes** GO to **Q6**. → **No** GO to **Q4**.

Official Licensed Product
Ford Motor Company

(Continued)

DIAGNOSIS AND TESTING (Continued)

PINPOINT TEST Q: THE POWER SEAT DOES NOT MOVE VERTICALLY—PASSENGER (Continued)

TEST CONDITIONS	TEST DETAILS/RESULTS/ACTIONS
Q4 CHECK CIRCUIT 988 (Y/LG) FOR AN OPEN	
1 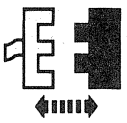 Passenger Seat Regulator Control Switch Connector C368 2 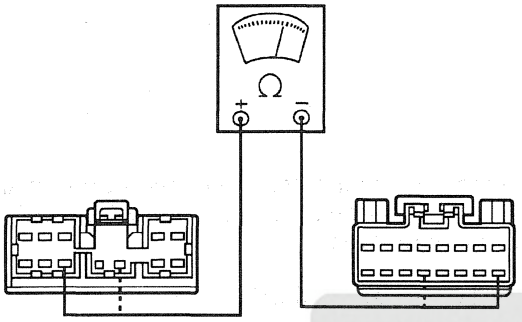 AR0257-C	2 Measure the resistance between the passenger seat regulator control switch Connector C368 and the passenger seat module Connector C336: Switch Connector Pin / Module Connector Pin / Circuit Rear C368-8 / C336-16 / 988 (Y/LG) Front C368-10 / C336-12 / 984 (Y/LB) • Is the resistance reading 5 ohms or less? → **Yes** GO to **Q5**. → **No** REPAIR Circuit 988 (Y/LG) or Circuit 984 (Y/LB) for an open. TEST the system for normal operation.
Q5 CHECK CIRCUIT 988 (Y/LG) FOR A SHORT TO GROUND	
1 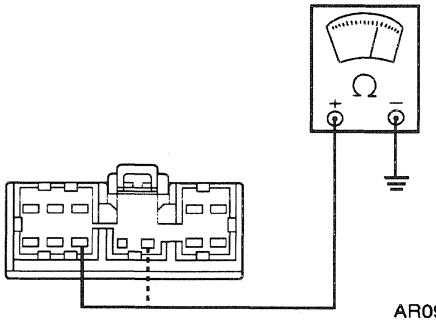 AR0906-A	1 Measure the resistance between the passenger seat regulator control switch connector Pin C368-8, Circuit 988 (Y/LG) rear or Pin C368-10, Circuit 984 (Y/LB) front and ground. • Is the resistance reading 10 K ohms or less? → **Yes** REPAIR Circuit 988 (Y/LG) or Circuit 984 (Y/LB) for a short to ground. TEST the system for normal operation. → **No** REPLACE the passenger seat regulator control switch. TEST the system for normal operation.

(Continued)

Official Licensed Product
Ford Motor Company

DIAGNOSIS AND TESTING (Continued)

PINPOINT TEST Q: THE POWER SEAT DOES NOT MOVE VERTICALLY—PASSENGER (Continued)

TEST CONDITIONS	TEST DETAILS/RESULTS/ACTIONS
Q6 CHECK CIRCUIT 989 (R/LG) FOR VOLTAGE	
1 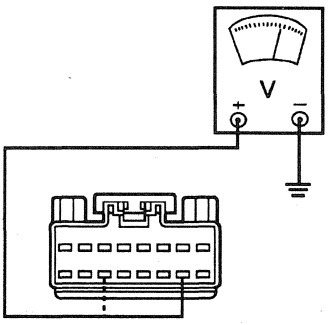 AR0913-A	1 Measure the voltage at the passenger seat module connector Pin C336-15, Circuit 989 (R/LG) rear or Pin C336-11, Circuit 985 (R/LB) front.
2 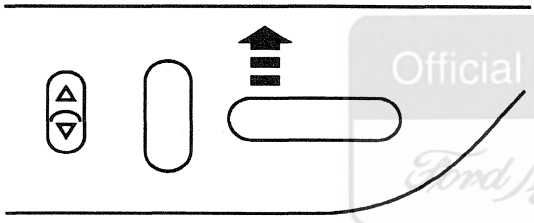 AR0084-A	2 Press the passenger seat regulator control switch to the rear UP position for the rear or the front UP position for the front. • Is the voltage reading B+? → **Yes** REPLACE the passenger seat module. TEST the system for normal operation. → **No** GO to **Q7**.

Official Licensed Product
Ford Motor Company

(Continued)

DIAGNOSIS AND TESTING (Continued)

PINPOINT TEST Q: THE POWER SEAT DOES NOT MOVE VERTICALLY—PASSENGER (Continued)

TEST CONDITIONS	TEST DETAILS/RESULTS/ACTIONS
Q7 CHECK CIRCUIT 989 (R/LG) FOR AN OPEN	
1 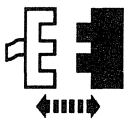 Passenger Seat Regulator Control Switch Connector C368	
2 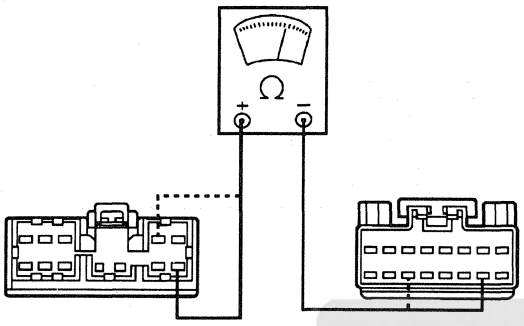 AR0255-C	2 Measure the resistance between the passenger seat regulator control switch Connector C368 and the passenger seat module Connector C336: **Switch Connector Pin** / **Module Connector Pin** / **Circuit** Rear C368-12 / C336-15 / 989 (R/LG) Front C368-4 / C336-11 / 985 (R/LB) • Is the resistance reading 5 ohms or less? → **Yes** GO to **Q8**. → **No** REPAIR Circuit 989 (R/LG) or Circuit 985 (R/LB) for an open. TEST the system for normal operation.
Q8 CHECK CIRCUIT 989 (R/LG) FOR A SHORT TO GROUND	
1 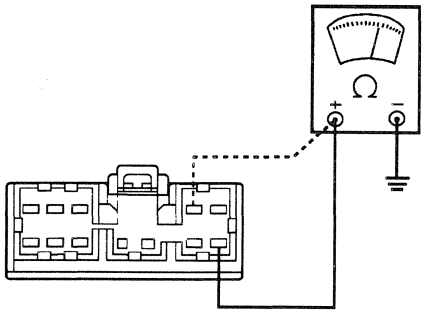 AR0909-A	1 Measure the resistance between the passenger seat regulator control switch connector Pin C368-12, Circuit 989 (R/LG) rear or Pin C368-4, Circuit 985 (R/LB) front. • Is the resistance reading 10 K ohms or less? → **Yes** REPAIR Circuit 989 (R/LG) or Circuit 985 (R/LB) for a short to ground. TEST the system for normal operation. → **No** REPLACE the passenger seat regulator control switch. TEST the system for normal operation.

(Continued)

Official Licensed Product
Ford Motor Company

DIAGNOSIS AND TESTING (Continued)

PINPOINT TEST Q: THE POWER SEAT DOES NOT MOVE VERTICALLY—PASSENGER (Continued)

TEST CONDITIONS	TEST DETAILS/RESULTS/ACTIONS
Q9 CHECK THE PASSENGER SEAT REAR MOTOR	
1 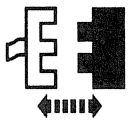 Passenger Seat Motor Connector C331	
2 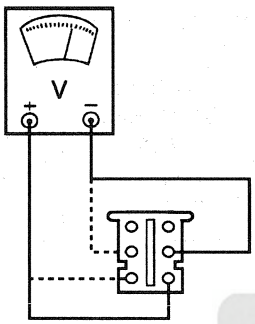 AR0910-A	2 Measure the voltage between the passenger seat motor connector Pins: **Rear**: Pin C331-3, Circuit 983 (R/LG) and Pin C331-1, Circuit 982 (Y/LG) **Front**: Pin C331-2, Circuit 979 (R/LB) and Pin C331-4, Circuit 978 (Y/LB)
3 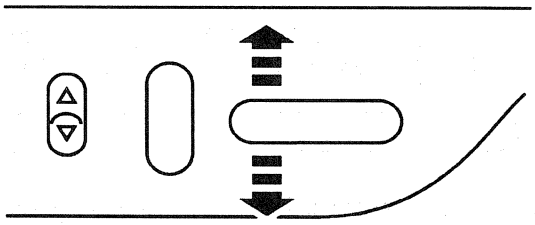 AR0086-A	3 Press the passenger seat regulator control to the rear UP position for the rear or the front UP position for the front. • Is the voltage reading B+? → **Yes** REPLACE the passenger seat track assembly. TEST the system for normal operation. → **No** GO to **Q10**.

Official Licensed Product
Ford Motor Co.

(Continued)

DIAGNOSIS AND TESTING (Continued)

PINPOINT TEST Q: THE POWER SEAT DOES NOT MOVE VERTICALLY—PASSENGER (Continued)

TEST CONDITIONS	TEST DETAILS/RESULTS/ACTIONS
Q10 CHECK CIRCUIT 983 (R/LG) FOR AN OPEN	

1

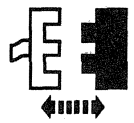

Passenger Seat Module Connector C357

2

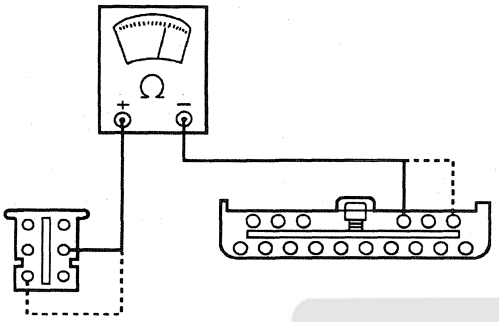

AR0250-C

2 Measure the resistance between the passenger seat module Connector C357 and the passenger seat motor Connector C331:

Module Connector Pin	Motor Connector Pin	Circuit
Rear C357-4	C331-3	983 (R/LG)
Front C357-6	C331-2	979 (R/LB)

Official Licensed Product
Ford Motor Company

- Is the resistance reading 5 ohms or less?

→ **Yes**
GO to **Q11**.

→ **No**
REPAIR Circuit 983 (R/LG) or Circuit 979 (R/LB) for an open. TEST the system for normal operation.

(Continued)

DIAGNOSIS AND TESTING (Continued)

PINPOINT TEST Q: THE POWER SEAT DOES NOT MOVE VERTICALLY—PASSENGER (Continued)

TEST CONDITIONS	TEST DETAILS/RESULTS/ACTIONS
Q11 CHECK CIRCUIT 982 (Y/LG) FOR AN OPEN	
1 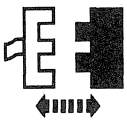 Passenger Seat Module Connector C357 2 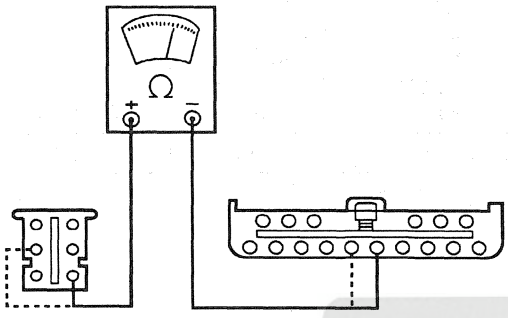 AR0247-C	2 Measure the resistance between the passenger seat module Connector C357 and the passenger seat motor Connector C331: **Module Connector Pin** / **Motor Connector Pin** / **Circuit** Rear C357-12 / C331-1 / 982 (Y/LG) Front C357-11 / C331-4 / 978 (Y/LB) • Is the resistance reading 5 ohms or less? → **Yes** REPLACE the passenger seat module. TEST the system for normal operation. → **No** REPAIR Circuit 982 (Y/LG) or Circuit 978 (Y/LB) for an open. TEST the system for normal operation.

Official Licensed Product
Ford Motor Company

PINPOINT TEST R: THE POWER RECLINE DOES NOT OPERATE PROPERLY—DRIVER

TEST CONDITIONS	TEST DETAILS/RESULTS/ACTIONS
R1 CHECK SEAT OPERATION	
	1 Adjust the driver seat using the driver seat regulator control switch. • Does any driver seat adjustment operate? → **Yes** GO to **R2**. → **No** GO to Pinpoint Test K.

(Continued)

DIAGNOSIS AND TESTING (Continued)

PINPOINT TEST R: THE POWER RECLINE DOES NOT OPERATE PROPERLY—DRIVER (Continued)

TEST CONDITIONS	TEST DETAILS/RESULTS/ACTIONS
R2 CHECK PID SRCL__SW	
1 NGS 2 Read DSM PID SRCL__SW 3 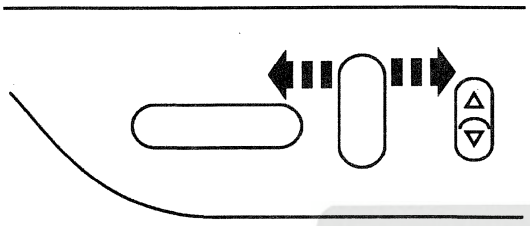 AR0092-A	3 Press the driver seat regulator control switch to the forward RECLINE position then the rearward RECLINE position while monitoring PID SRCL__SW. • Does PID SRCL__SW change from FWD to RWD as the switch is pressed? → **Yes** GO to **R9**. → **No** GO to **R3**.
R3 CHECK CIRCUIT 919 (GY/BK) FOR VOLTAGE	
1 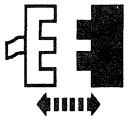 DSM Connector C350 2 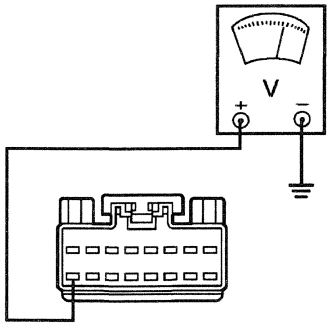 AR0074-B	2 Measure the voltage at the DSM connector Pin C350-9, Circuit 919 (GY/BK).

(Continued)

Official Licensed Product Ford Motor Company

DIAGNOSIS AND TESTING (Continued)

PINPOINT TEST R: THE POWER RECLINE DOES NOT OPERATE PROPERLY—DRIVER (Continued)

TEST CONDITIONS	TEST DETAILS/RESULTS/ACTIONS
R3 CHECK CIRCUIT 919 (GY/BK) FOR VOLTAGE (Continued)	
3 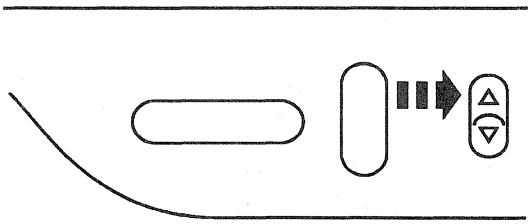 AR0091-A	3 Press the driver seat regulator control switch to the rearward RECLINE position. • Is the voltage reading B+? → **Yes** GO to **R6**. → **No** GO to **R4**.
R4 CHECK CIRCUIT 919 (GY/BK) FOR AN OPEN	
1 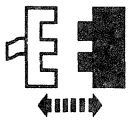 Driver Seat Regulator Control Switch Connector C367 2 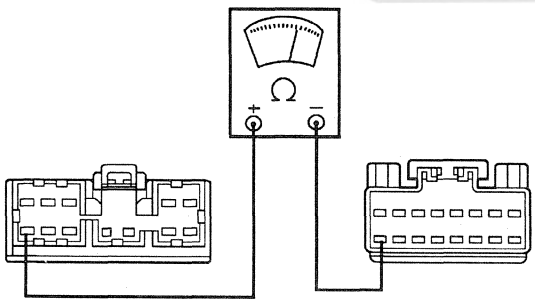 AR0235-B	2 Measure the resistance of Circuit 919 (GY/BK) between the driver seat regulator control switch connector Pin C367-7 and the DSM connector Pin C350-9. • Is the resistance reading 5 ohms or less? → **Yes** GO to **R5**. → **No** REPAIR Circuit 919 (GY/BK) for an open. TEST the system for normal operation.

Official Licensed Product
Ford Motor Company

(Continued)

DIAGNOSIS AND TESTING (Continued)

PINPOINT TEST R: THE POWER RECLINE DOES NOT OPERATE PROPERLY—DRIVER (Continued)

TEST CONDITIONS	TEST DETAILS/RESULTS/ACTIONS
R5 CHECK CIRCUIT 919 (GY/BK) FOR A SHORT TO GROUND	
1 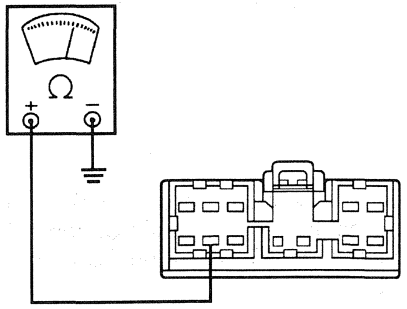 AR0234-B	1 Measure the resistance between the driver seat regulator control switch connector Pin C367-7, Circuit 919 (GY/BK) and ground. • Is the resistance reading 10 K ohms or less? → **Yes** REPAIR Circuit 919 (GY/BK) for a short to ground. TEST the system for normal operation. → **No** REPLACE the driver seat regulator control switch. TEST the system for normal operation.
R6 CHECK CIRCUIT 918 (GY) FOR VOLTAGE	
1 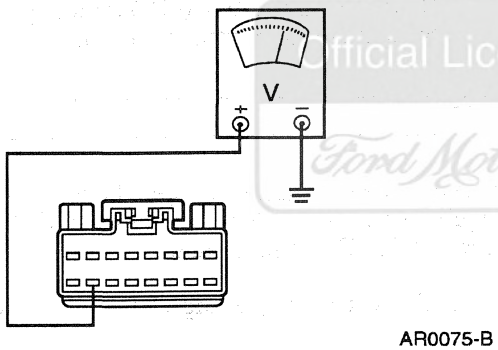 AR0075-B	1 Measure the voltage at the DSM connector Pin C350-10, Circuit 918 (GY).
2 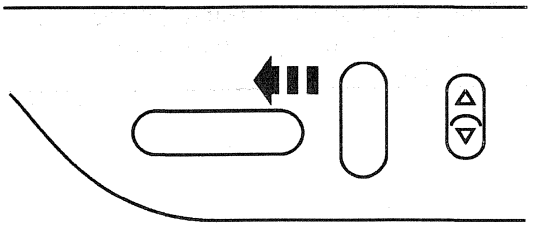 AR0090-A	2 Press the driver seat regulator control switch to the forward RECLINE position. • Is the voltage reading B+? → **Yes** REPLACE the DSM. TEST the system for normal operation. → **No** GO to **R7**.

Official Licensed Product Ford Motor Company

(Continued)

DIAGNOSIS AND TESTING (Continued)

PINPOINT TEST R: THE POWER RECLINE DOES NOT OPERATE PROPERLY—DRIVER (Continued)

TEST CONDITIONS	TEST DETAILS/RESULTS/ACTIONS
R7 CHECK CIRCUIT 918 (GY) FOR AN OPEN	
1 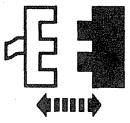 Driver Seat Regulator Control Switch Connector C367 2 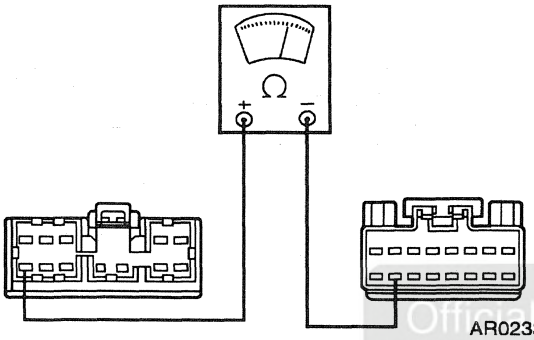 AR0233-B	2 Measure the resistance of Circuit 918 (GY) between the driver seat regulator control switch connector Pin C367-6 and the DSM connector Pin C350-10. • Is the resistance reading 5 ohms or less? → **Yes** GO to **R8**. → **No** REPAIR Circuit 918 (GY) for an open. TEST the system for normal operation.
R8 CHECK CIRCUIT 918 (GY) FOR A SHORT TO GROUND	
1 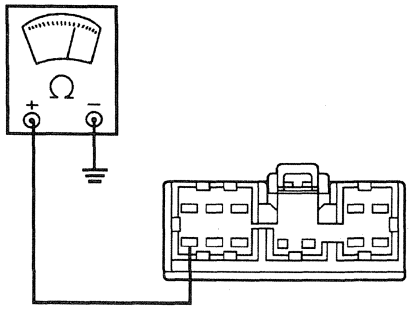 AR0232-B	1 Measure the resistance between the driver seat regulator control switch connector Pin C367-6, Circuit 918 (GY) and ground. • Is the resistance reading 10 K ohms or less? → **Yes** REPAIR Circuit 918 (GY) for a short to ground. TEST the system for normal operation. → **No** REPLACE the driver seat regulator control switch. TEST the system for normal operation.

Official Licensed Product Ford Motor Company

(Continued)

DIAGNOSIS AND TESTING (Continued)

PINPOINT TEST R: THE POWER RECLINE DOES NOT OPERATE PROPERLY—DRIVER (Continued)

TEST CONDITIONS	TEST DETAILS/RESULTS/ACTIONS
R9 CHECK THE DRIVER SEAT RECLINER MOTOR	
1 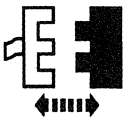 Driver Seat Recliner Motor Connector C353	
2 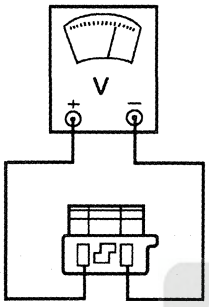 AR0231-A	2 Measure the voltage between the driver seat recliner motor Connector C353, Circuit 51 (BK/W) and Circuit 990 (Y/LB).
3 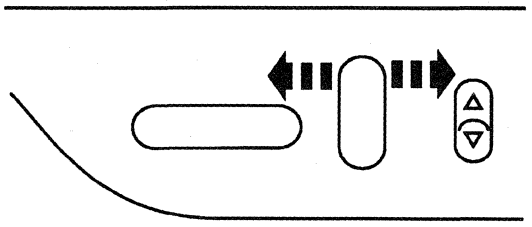 AR0092-A	3 Press the driver seat regulator control to the forward RECLINE or the rearward RECLINE position. • Is the voltage reading B+? → **Yes** REPLACE the driver front seat back latch. TEST the system for normal operation. → **No** GO to **R10**.

Official Licensed Product
Ford Motor Co.

(Continued)

DIAGNOSIS AND TESTING (Continued)

PINPOINT TEST R: THE POWER RECLINE DOES NOT OPERATE PROPERLY—DRIVER (Continued)

TEST CONDITIONS	TEST DETAILS/RESULTS/ACTIONS
R10 CHECK CIRCUIT 51 (BK/W) FOR AN OPEN	
1 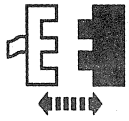 DSM Connector C355 2 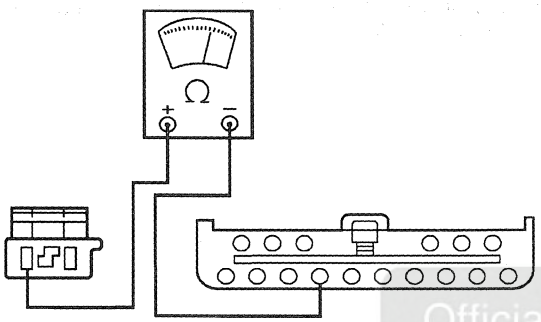 AR0228-B	2 Measure the resistance of Circuit 51 (BK/W) between the DSM connector Pin C355-10 and the driver seat recliner motor Connector C353. • Is the resistance reading 5 ohms or less? → **Yes** GO to **R11**. → **No** REPAIR Circuit 51 (BK/W) for an open. TEST the system for normal operation.
R11 CHECK CIRCUIT 990 (Y/LB) FOR AN OPEN	
1 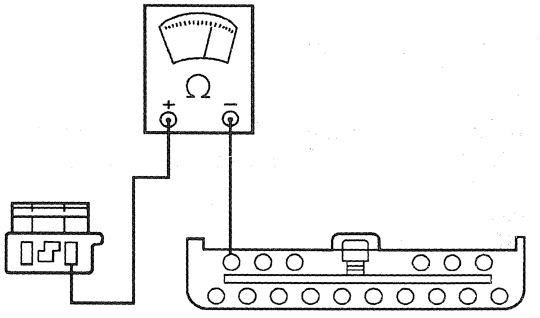 AR0225-B	1 Measure the resistance of Circuit 990 (Y/LB) between the DSM connector Pin C355-1 and the driver seat recliner motor Connector C353. • Is the resistance reading 5 ohms or less? → **Yes** REPLACE the driver seat module. TEST the system for normal operation. → **No** REPAIR Circuit 990 (Y/LB) for an open. TEST the system for normal operation.

Official Licensed Product
Ford Motor Company

DIAGNOSIS AND TESTING (Continued)

PINPOINT TEST S: THE POWER RECLINE DOES NOT OPERATE PROPERLY—PASSENGER

TEST CONDITIONS	TEST DETAILS/RESULTS/ACTIONS
S1 CHECK SEAT OPERATION	
	[1] Adjust the passenger seat using the passenger seat regulator control switch. • Does any passenger seat adjustment operate? → **Yes** GO to **S2**. → **No** GO to Pinpoint Test L.
S2 CHECK PID SRCL__SW	
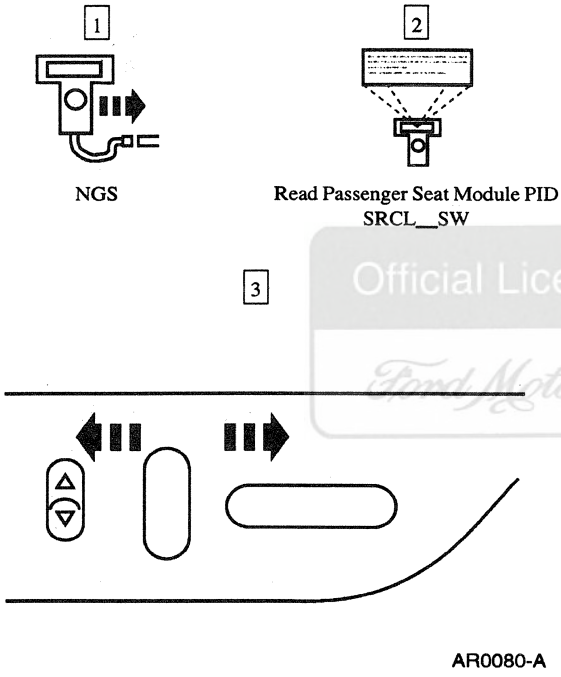	[3] Press the passenger seat regulator control switch to the FORWARD RECLINE position then the REARWARD RECLINE position while monitoring PID SRCL__SW. • Does PID SRCL__SW change from FWD to RWD as the switch is pressed? → **Yes** GO to **S9**. → **No** GO to **S3**.

Official Licensed Product
Ford Motor Company

(Continued)

DIAGNOSIS AND TESTING (Continued)

PINPOINT TEST S: THE POWER RECLINE DOES NOT OPERATE PROPERLY—PASSENGER (Continued)

TEST CONDITIONS	TEST DETAILS/RESULTS/ACTIONS
S3 CHECK CIRCUIT 919 (GY/BK) FOR VOLTAGE	
1 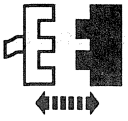 Passenger Seat Module Connector C336	
2 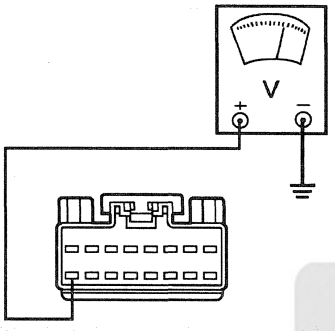 AR0074-B	2 Measure the voltage at the passenger seat module connector Pin C336-9, Circuit 919 (GY/BK).
3 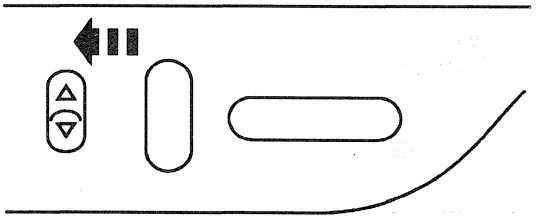 AR0078-A	3 Press the passenger seat regulator control switch to the REARWARD RECLINE position. • Is the voltage reading B+? → **Yes** GO to **S6**. → **No** GO to **S4**.

Official Licensed Product
Ford Motor Co.

(Continued)

DIAGNOSIS AND TESTING (Continued)

PINPOINT TEST S: THE POWER RECLINE DOES NOT OPERATE PROPERLY—PASSENGER (Continued)

TEST CONDITIONS	TEST DETAILS/RESULTS/ACTIONS
S4 CHECK CIRCUIT 919 (GY/BK) FOR AN OPEN	
1 Passenger Seat Regulator Control Switch Connector C368 2 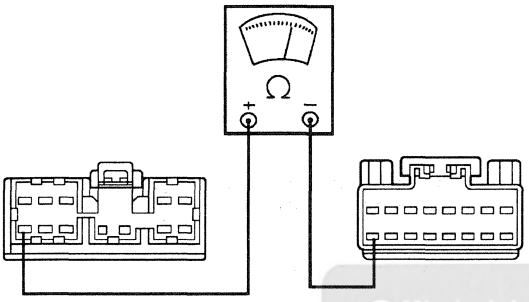 AR0235-B	2 Measure the resistance of Circuit 919 (GY/BK) between the passenger seat regulator control switch connector Pin C368-7 and the passenger seat module connector Pin C336-9. • Is the resistance reading 5 ohms or less? → **Yes** GO to **S5**. → **No** REPAIR Circuit 919 (GY/BK) for an open. TEST the system for normal operation.
S5 CHECK CIRCUIT 919 (GY/BK) FOR A SHORT TO GROUND	
1 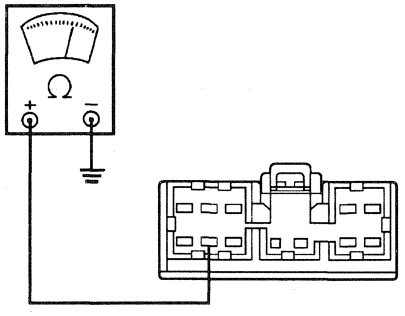 AR0234-B	1 Measure the resistance between the passenger seat regulator control switch connector Pin C368-7, Circuit 919 (GY/BK) and ground. • Is the resistance reading 10 K ohms or less? → **Yes** REPAIR Circuit 919 (GY/BK) for a short to ground. TEST the system for normal operation. → **No** REPLACE the passenger seat regulator control switch. TEST the system for normal operation.

(Continued)

Official Licensed Product Ford Motor Company

DIAGNOSIS AND TESTING (Continued)

PINPOINT TEST S: THE POWER RECLINE DOES NOT OPERATE PROPERLY—PASSENGER (Continued)

TEST CONDITIONS	TEST DETAILS/RESULTS/ACTIONS
S6 CHECK CIRCUIT 918 (GY) FOR VOLTAGE	
1 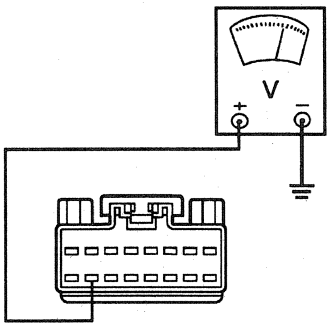 AR0075-B	1 Measure the voltage at the passenger seat module Connector C336-10, Circuit 918 (GY). 2 Press the passenger seat regulator control switch to the FORWARD RECLINE position. • Is the voltage reading B+? → **Yes** REPLACE the passenger seat module. TEST the system for normal operation. → **No** GO to **S7**.
2 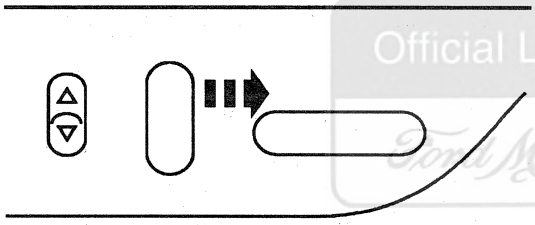 AR0079-A	

Official Licensed Product
Ford Motor Company

(Continued)

DIAGNOSIS AND TESTING (Continued)

PINPOINT TEST S: THE POWER RECLINE DOES NOT OPERATE PROPERLY—PASSENGER (Continued)

TEST CONDITIONS	TEST DETAILS/RESULTS/ACTIONS
S7 CHECK CIRCUIT 918 (GY) FOR AN OPEN	
1 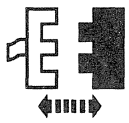 Passenger Seat Regulator Control Switch Connector C368 2 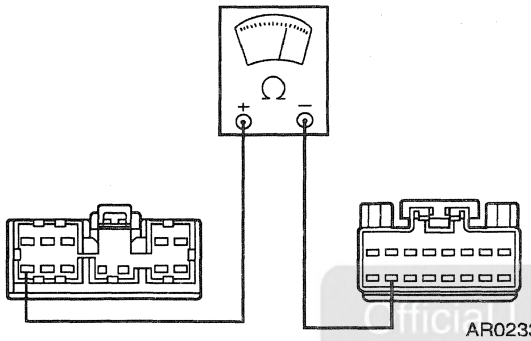 AR0233-B	2 Measure the resistance of Circuit 918 (GY) between the passenger seat regulator control switch connector Pin C368-6 and the passenger seat module connector Pin C336-10. • Is the resistance reading 5 ohms or less? → **Yes** GO to **S8**. → **No** REPAIR Circuit 918 (GY) for an open. TEST the system for normal operation.
S8 CHECK CIRCUIT 918 (GY) FOR A SHORT TO GROUND	
1 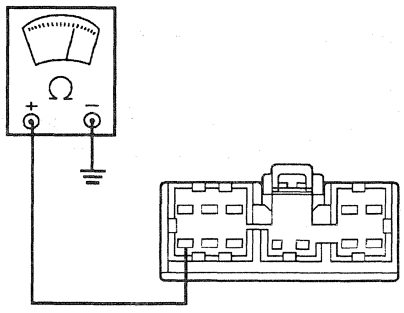 AR0232-B	1 Measure the resistance between the passenger seat regulator control switch connector Pin C368-6, Circuit 918 (GY) and ground. • Is the resistance reading 10 K ohms or less? → **Yes** REPAIR Circuit 918 (GY) for a short to ground. TEST the system for normal operation. → **No** REPLACE the passenger seat regulator control switch. TEST the system for normal operation.

Official Licensed Product
Ford Motor Company

(Continued)

DIAGNOSIS AND TESTING (Continued)

PINPOINT TEST S: THE POWER RECLINE DOES NOT OPERATE PROPERLY—PASSENGER (Continued)

TEST CONDITIONS	TEST DETAILS/RESULTS/ACTIONS
S9 CHECK THE PASSENGER SEAT RECLINER MOTOR	
1 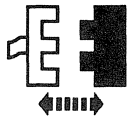 Passenger Seat Recliner Motor Connector C328	
2 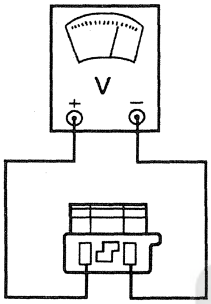 AR0231-A	2 Measure the voltage between the passenger seat recliner motor Connector C328, Circuit 51 (BK/W) and Circuit 990 (Y/LB).
3 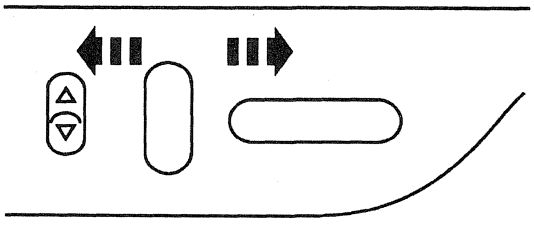 AR0080-A	3 Press the passenger seat regulator control to the FORWARD RECLINE or the REARWARD RECLINE position. • Is the voltage reading B+? → **Yes** REPLACE the passenger front seat back latch. TEST the system for normal operation. → **No** GO to **S10**.

(Continued)

Official Licensed Product
Ford Motor Co.

DIAGNOSIS AND TESTING (Continued)

PINPOINT TEST S: THE POWER RECLINE DOES NOT OPERATE PROPERLY—PASSENGER (Continued)

TEST CONDITIONS	TEST DETAILS/RESULTS/ACTIONS
S10 CHECK CIRCUIT 51 (BK/W) FOR AN OPEN	
1 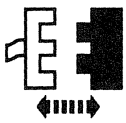 Passenger Seat Module Connector C357 2 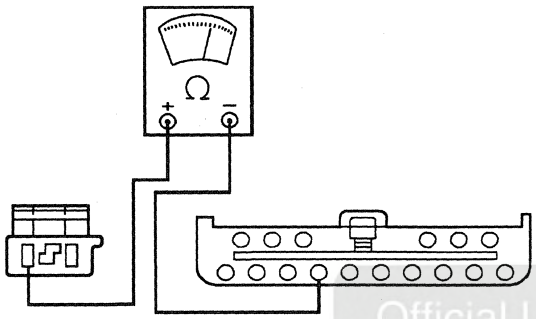 AR0228-B	2 Measure the resistance of Circuit 51 (BK/W) between the passenger seat module connector Pin C357-10 and the passenger seat recliner motor Connector C328. • Is the resistance reading 5 ohms or less? → **Yes** GO to **S11.** → **No** REPAIR Circuit 51 (BK/W) for an open. TEST the system for normal operation.
S11 CHECK CIRCUIT 990 (Y/LB) FOR AN OPEN	
1 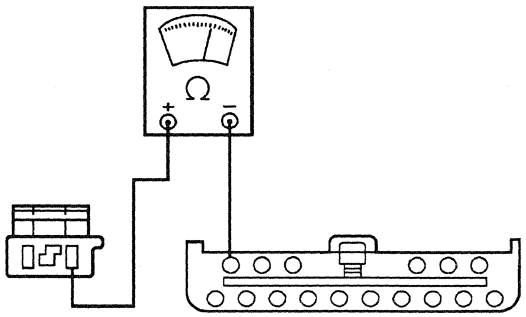 AR0225-B	1 Measure the resistance of Circuit 990 (Y/LB) between the passenger seat module connector Pin C357-1 and the passenger seat recliner motor Connector C328. • Is the resistance reading 5 ohms or less? → **Yes** REPLACE the passenger seat module. TEST the system for normal operation. → **No** REPAIR Circuit 990 (Y/LB) for an open. TEST the system for normal operation.

Official Licensed Product
Ford Motor Company

DIAGNOSIS AND TESTING (Continued)

PINPOINT TEST T: THE MEMORY SEAT DOES NOT OPERATE PROPERLY

TEST CONDITIONS	TEST DETAILS/RESULTS/ACTIONS
T1 CHECK DRIVER POWER SEAT OPERATION	
	1 Operate the driver seat using the driver seat regulator control switch. • Does the driver seat move to all positions? → **Yes** GO to **T2**. → **No** REFER to the Symptom Chart to repair the inoperative seat function.
T2 CHECK MIRROR OPERATION	
	1 Operate the mirrors, set new position to the memory 1 position; refer to Section 501-09. 2 Turn memory off by pressing the memory OFF switch. 3 Move the mirrors again. 4 Turn the ignition switch to OFF, remove the key and exit the vehicle. 5 After 10 seconds, enter the vehicle and select the memory 1 button. • Do the mirrors return to the previously stored position? → **Yes** GO to **T3**. → **No** REFER to Section 501-09 for diagnostic procedures.

Official Licensed Product
Ford Motor Company

(Continued)

DIAGNOSIS AND TESTING (Continued)

PINPOINT TEST T: THE MEMORY SEAT DOES NOT OPERATE PROPERLY (Continued)

TEST CONDITIONS	TEST DETAILS/RESULTS/ACTIONS
T3 CHECK FOR DTCS	
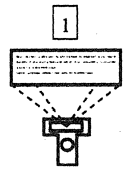 DSM Self Test	• Are DTCs U1180, U1181 or U1194 retrieved? → **Yes** REFER to the Driver Seat Module (DSM) Diagnostic Trouble Code (DTC) Index. REPAIR as directed. → **No** REPLACE the driver seat module. TEST the system for normal operation.

PINPOINT TEST U: EASY EXIT/EASY ENTRY DOES NOT OPERATE PROPERLY

TEST CONDITIONS	TEST DETAILS/RESULTS/ACTIONS
U1 CHECK THE DRIVER SEAT OPERATION	
	1 Operate the driver seat using the driver seat regulator control switch. • Does the driver seat move through all positions? → **Yes** GO to **U2**. → **No** REFER to the Symptom Chart to repair the inoperative seat function.
U2 CHECK THE STEERING COLUMN OPERATION	
	1 Operate the steering column tilt and telescoping systems. • Does the steering column adjust properly? → **Yes** GO to **U3**. → **No** REFER to Section 211-05 to diagnose the steering column.

(Continued)

Official Licensed Product
Ford Motor Company

DIAGNOSIS AND TESTING (Continued)

PINPOINT TEST U: EASY EXIT/EASY ENTRY DOES NOT OPERATE PROPERLY (Continued)

TEST CONDITIONS	TEST DETAILS/RESULTS/ACTIONS
U3 CHECK FOR SYSTEM ENABLED	
1 	2 Select Easy Exit/Easy Entry function on the message center indicator display. • Is the Easy Exit/Easy Entry function enabled? → **Yes** GO to **U4**. → **No** Enable the Easy Exit/Easy Entry function. TEST the system for normal operation. Instruct the customer on the proper operation.
U4 CHECK EASY EXIT OPERATION	
1 	2 Make sure the driver seat is at least 51 mm (2 inches) from the rear stop.
3 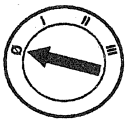	4 Remove the key from the ignition switch. • Does the driver seat move rearward approximately 51 mm (2 inches)? → **Yes** GO to **U7**. → **No** GO to **U5**.

(Continued)

Official Licensed Product
Ford Motor Company

DIAGNOSIS AND TESTING (Continued)

PINPOINT TEST U: EASY EXIT/EASY ENTRY DOES NOT OPERATE PROPERLY (Continued)

TEST CONDITIONS	TEST DETAILS/RESULTS/ACTIONS
U5 CHECK PID IGN__SCI	
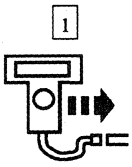 1 NGS 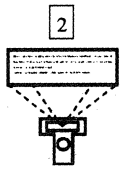 2 SCIL PID IGN__SCI and IGN__KEY	3 Turn the ignition switch beginning at OFF, one position at a time while monitoring PID IGN__SCI, then turn to OFF and remove the ignition key while monitoring PID IGN__KEY. • Does PID IGN__SCI read OFF, ACCSSY, RUN and START as the key is cycled and PID IGN__KEY read OUT when key is removed? → **Yes** GO to **U6**. → **No** REFER to Section 501-12 to diagnose the ignition switch concern.
U6 CHECK THE DTCS	
 1 DSM Self Test	• Is DTC U1135 retrieved? → **Yes** REFER to the Driver Seat Module (DSM) Diagnostic Trouble Code (DTC) Index to service the DTC. → **No** REPLACE the driver seat module. TEST the system for normal operation.

Official Licensed Product
Ford Motor Company

(Continued)

DIAGNOSIS AND TESTING (Continued)

PINPOINT TEST U: EASY EXIT/EASY ENTRY DOES NOT OPERATE PROPERLY (Continued)

TEST CONDITIONS	TEST DETAILS/RESULTS/ACTIONS
U7 CHECK EASY ENTRY	
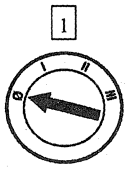	2 Remove the key from the ignition switch and exit the vehicle and close the driver door. 3 After 10 seconds, open the driver door, sit in the driver seat and close the driver door. • Does the driver seat move forward approximately 51 mm (2 inches)? → **Yes** The system is operating normally. Instruct the customer on the system operation. → **No** GO to **U8**.
U8 CHECK THE STEERING COLUMN/IGNITION/LIGHTING CONTROL MODULE DTCS	
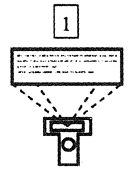 SCIL Self-Test	• Is DTC B1566 or U1199 retrieved? → **Yes** REFER to the Steering Column/Ignition/Lighting Control Module Diagnostic Trouble Code (DTC) Index to repair the DTCs. → **No** GO to **U9**.

(Continued)

Official Licensed Product Ford Motor Company

DIAGNOSIS AND TESTING (Continued)

PINPOINT TEST U: EASY EXIT/EASY ENTRY DOES NOT OPERATE PROPERLY (Continued)

TEST CONDITIONS	TEST DETAILS/RESULTS/ACTIONS
U9 CHECK THE DRIVER SEAT MODULE DTCS	
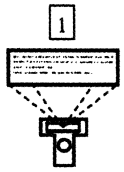 DSM Self Test	• Is DTC U1199 retrieved? → **Yes** REFER to the Driver Seat Module (DSM) Diagnostic Trouble Code (DTC) Index to repair the DTC. → **No** REPLACE the driver seat module. TEST the system for normal operation.

PINPOINT TEST V: THE AUTOGLIDE DOES NOT OPERATE PROPERLY—DRIVER

TEST CONDITIONS	TEST DETAILS/RESULTS/ACTIONS
V1 CHECK DRIVER SEAT OPERATION	
	1 Operate the driver seat using the driver seat regulator control switch. • Does the driver seat move through all positions? → **Yes** GO to **V2**. → **No** REFER to the Symptom Chart to repair the inoperative seat function.

(Continued)

Official Licensed Product
Ford Motor Company

DIAGNOSIS AND TESTING (Continued)

PINPOINT TEST V: THE AUTOGLIDE DOES NOT OPERATE PROPERLY—DRIVER (Continued)

TEST CONDITIONS	TEST DETAILS/RESULTS/ACTIONS
V2 CHECK PID AGLIDEF	
1 Read DSM PID AGLIDEF	2 Move the driver seat back forward while monitoring PID AGLIDEF. • Does PID AGLIDEF read ACTIVE? → **Yes** GO to **V5**. → **No** GO to **V3**.
V3 CHECK CIRCUIT 875 (BK/LB) FOR AN OPEN	
1 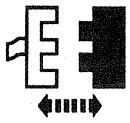 Driver Seat Back Switch Connector C354 2 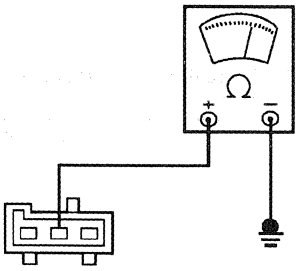 AR0284-A	2 Measure the resistance between the driver seat back switch Connector C354, Circuit 875 (BK/LB) and ground. • Is the resistance reading 5 ohms or less? → **Yes** GO to **V4**. → **No** REPAIR Circuit 875 (BK/LB) for an open. TEST the system for normal operation.

Official Licensed Product
Ford Motor Company

(Continued)

DIAGNOSIS AND TESTING (Continued)

PINPOINT TEST V: THE AUTOGLIDE DOES NOT OPERATE PROPERLY—DRIVER (Continued)

TEST CONDITIONS	TEST DETAILS/RESULTS/ACTIONS
V4 CHECK CIRCUIT 456 (DG/O) FOR AN OPEN	
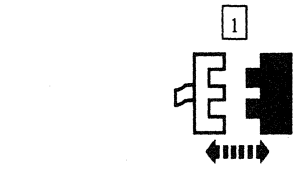 DSM Connector C350 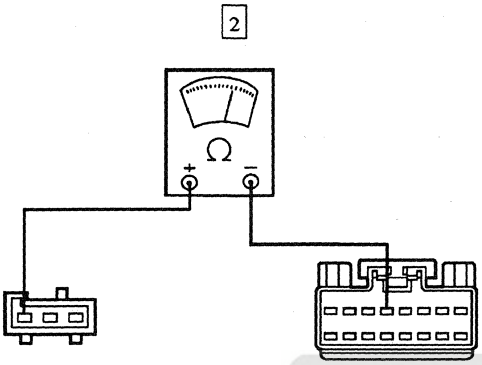 AR0208-B	2 Measure the resistance of Circuit 456 (DG/O) between the DSM Connector C350-4, Circuit 456 (DG/O) and the driver seat back switch Connector C354. • Is the resistance reading 5 ohms or less? → **Yes** GO to **V5**. → **No** REPAIR Circuit 456 (DG/O) for an open. TEST the system for normal operation.
V5 CHECK PID AGLIDER	
 Read DSM PID AGLIDER	2 Move the driver seat back rearward while monitoring PID AGLIDER. • Does PID AGLIDER read ACTIVE? → **Yes** REPLACE the driver seat module. TEST the system for normal operation. → **No** GO to **V6**.

(Continued)

Official Licensed Product
Ford Motor Company

DIAGNOSIS AND TESTING (Continued)

PINPOINT TEST V: THE AUTOGLIDE DOES NOT OPERATE PROPERLY—DRIVER (Continued)

TEST CONDITIONS	TEST DETAILS/RESULTS/ACTIONS
V6 CHECK CIRCUIT 875 (BK/LB)	
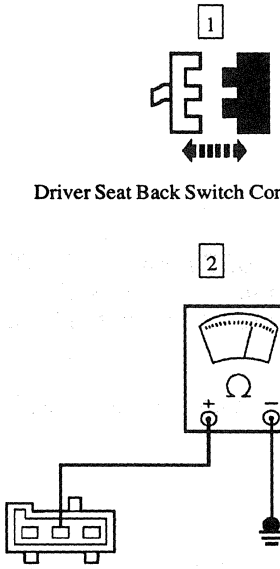 Driver Seat Back Switch Connector C354 AR0284-A	2 Measure the resistance between the driver seat back switch Connector C354, Circuit 875 (BK/LB) and ground. • Is the resistance reading 5 ohms or less? → **Yes** GO to **V7**. → **No** REPAIR Circuit 875 (BK/LB) for an open. TEST the system for normal operation.
V7 CHECK CIRCUIT 457 (DB/Y) FOR AN OPEN	
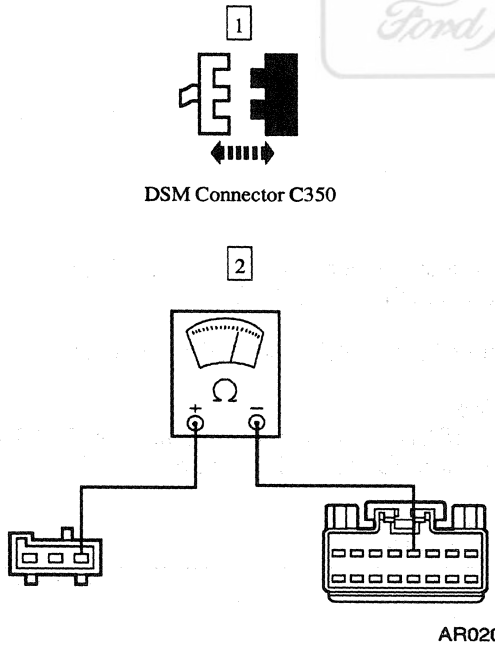 DSM Connector C350 AR0207-B	2 Measure the resistance of Circuit 457 (DB/Y) between the DSM Connector C350-5 and the driver seat back switch Connector C354. • Is the resistance reading 5 ohms or less? → **Yes** REPLACE the driver seat back rearward switch. TEST the system for normal operation. → **No** REPAIR Circuit 457 (DB/Y) for an open. TEST the system for normal operation.

Official Licensed Product
Ford Motor Company

DIAGNOSIS AND TESTING (Continued)

PINPOINT TEST W: THE AUTOGLIDE DOES NOT OPERATE PROPERLY—PASSENGER

TEST CONDITIONS	TEST DETAILS/RESULTS/ACTIONS
W1 CHECK PASSENGER SEAT OPERATION	
	1 Operate the passenger seat using the passenger seat regulator control switch. • Does the passenger seat move through all positions? → **Yes** GO to **W2**. → **No** REFER to the Symptom Chart to repair the inoperative seat function.
W2 CHECK PID AUTOGLIDE FOR FWD	
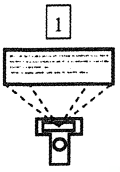 Read Passenger Seat Module PID AUTOGLD	2 Move the passenger seat back forward while monitoring PID AUTOGLD. • Does PID AUTOGLD read FWD? → **Yes** GO to **W5**. → **No** GO to **W3**.

Official Licensed Product
Ford Motor Company

(Continued)

DIAGNOSIS AND TESTING (Continued)

PINPOINT TEST W: THE AUTOGLIDE DOES NOT OPERATE PROPERLY—PASSENGER (Continued)

TEST CONDITIONS	TEST DETAILS/RESULTS/ACTIONS
W3 CHECK CIRCUIT 938 (BK/LG) FOR AN OPEN	
1 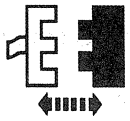 Passenger Seat Back Switch Connector C329 2 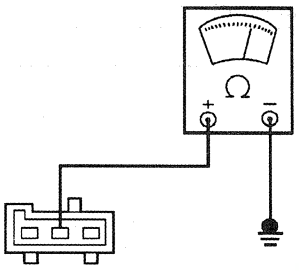 AR0284-A	2 Measure the resistance between the passenger seat back switch Connector C329, Circuit 938 (BK/LG) and ground. • Is the resistance reading 5 ohms or less? → **Yes** GO to **W4**. → **No** REPAIR Circuit 938 (BK/LG) for an open. TEST the system for normal operation.
W4 CHECK CIRCUIT 456 (DG/O) FOR AN OPEN	
1 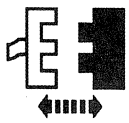 Passenger Seat Module Connector C336 2 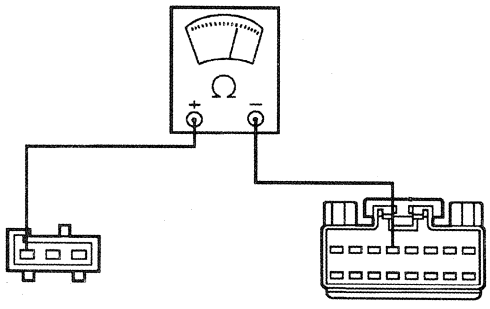 AR0208-B	2 Measure the resistance of Circuit 456 (DG/O) between the passenger seat module connector Pin C336-4, Circuit 456 (DG/O) and the passenger seat back switch Connector C329. • Is the resistance reading 5 ohms or less? → **Yes** GO to **W5**. → **No** REPAIR Circuit 456 (DG/O) for an open. TEST the system for normal operation.

(Continued)

Official Licensed Product Ford Motor Company

DIAGNOSIS AND TESTING (Continued)

PINPOINT TEST W: THE AUTOGLIDE DOES NOT OPERATE PROPERLY—PASSENGER (Continued)

TEST CONDITIONS	TEST DETAILS/RESULTS/ACTIONS
W5 CHECK PID AUTOGLD FOR RWD	
1 Read Passenger Seat Module PID AUTOGLD	2 Move the passenger seat back rearward while monitoring PID AUTOGLD. • Does PID AUTOGLD read RWD? → **Yes** REPLACE the passenger seat module. TEST the system for normal operation. → **No** GO to **W6**.
W6 CHECK CIRCUIT 938 (BK/LG)	
1 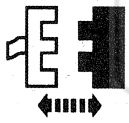 Passenger Seat Back Switch Connector C329 2 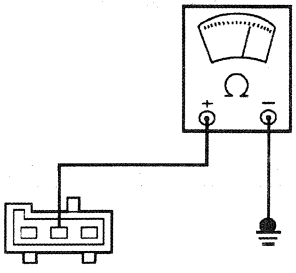 AR0284-A	2 Measure the resistance between the passenger seat back switch Connector C329, Circuit 938 (BK/LG) and ground. • Is the resistance reading 5 ohms or less? → **Yes** GO to **W7**. → **No** REPAIR Circuit 938 (BK/LG) for an open. TEST the system for normal operation.

(Continued)

Official Licensed Product Ford Motor Company

DIAGNOSIS AND TESTING (Continued)

PINPOINT TEST W: THE AUTOGLIDE DOES NOT OPERATE PROPERLY—PASSENGER (Continued)

TEST CONDITIONS	TEST DETAILS/RESULTS/ACTIONS
W7 CHECK CIRCUIT 457 (DB/Y) FOR AN OPEN	
1 Passenger Seat Module Connector C336 2 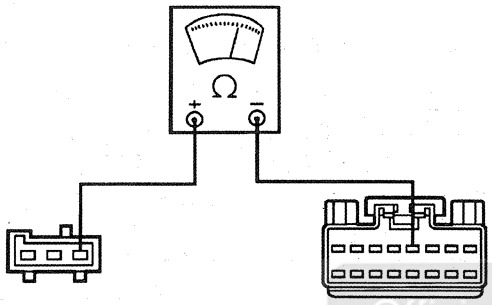 AR0207-B	2 Measure the resistance of Circuit 457 (DB/Y) between the passenger seat module connector Pin C336-5 and the passenger seat back switch Connector C329. • Is the resistance reading 5 ohms or less? → **Yes** REPLACE the passenger seat back rearward switch. TEST the system for normal operation. → **No** REPAIR Circuit 457 (DB/Y) for an open. TEST the system for normal operation.

Official Licensed Product

PINPOINT TEST X: THE HEATED SEAT IS INOPERATIVE

TEST CONDITIONS	TEST DETAILS/RESULTS/ACTIONS
X1 CHECK THE PASSENGER HEATED SEAT	
	1 Operate the driver and the passenger heated seat. • Are both heated seats inoperative? → **Yes** GO to Pinpoint Test Y. → **No** GO to **X2** for driver or **X3** for passenger.

(Continued)

DIAGNOSIS AND TESTING (Continued)

PINPOINT TEST X: THE HEATED SEAT IS INOPERATIVE (Continued)

TEST CONDITIONS	TEST DETAILS/RESULTS/ACTIONS
X2 CHECK THE DRIVER CIRCUIT 1040 (R/LB) FOR AN OPEN	
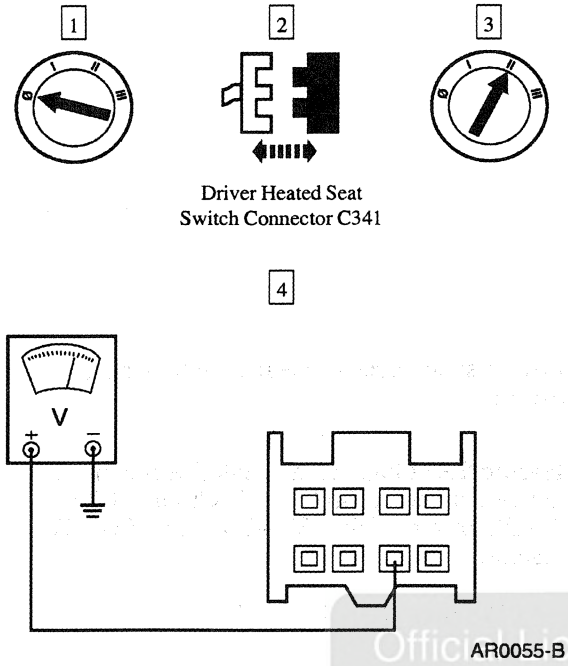	4 Measure the voltage at the driver heated switch connector Pin C341-6, Circuit 1040 (R/LB). • Is the voltage reading B+? → **Yes** GO to **X4**. → **No** REPAIR Circuit 1040 (R/LB) for an open. TEST the system for normal operation.
X3 CHECK THE PASSENGER CIRCUIT 1040 (R/LB) FOR AN OPEN	
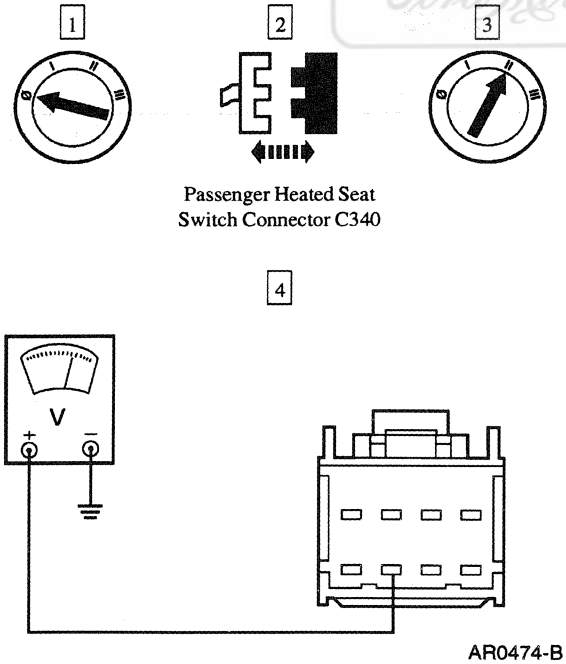	4 Measure the voltage at the passenger heated seat switch connector Pin C340-3, Circuit 1040 (R/LB). • Is the voltage reading B+? → **Yes** GO to **X4**. → **No** REPAIR Circuit 1040 (R/LB) for an open. TEST the system for normal operation.

Official Licensed Product
Ford Motor Company

(Continued)

DIAGNOSIS AND TESTING (Continued)

PINPOINT TEST X: THE HEATED SEAT IS INOPERATIVE (Continued)

TEST CONDITIONS	TEST DETAILS/RESULTS/ACTIONS
X4 CHECK THE POWER SUPPLY TO MODULE	
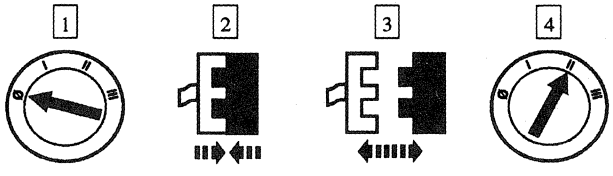 Heated Seat Switch Connector C341, Driver or C340 Passenger Heated Seat Control Module Connector C371, Driver or C374 Passenger	5 Turn the suspect heated seat switch to the 1 position.
6 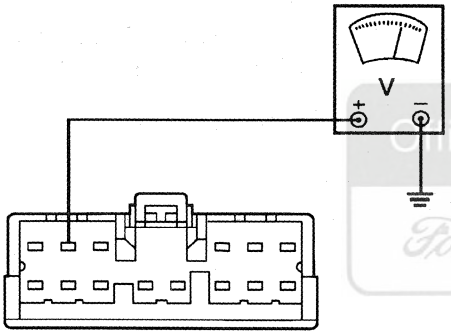 AR0465-B	6 Measure the voltage at the heated seat control module connector Pin C371-2, Circuit 1020 (DG/P), driver or Pin C374-2, Circuit 581 (R) passenger. • Is the voltage reading B+? → **Yes** GO to **X7.** → **No** GO to **X5.**

Official Licensed Product
Ford Motor Company

(Continued)

DIAGNOSIS AND TESTING (Continued)

PINPOINT TEST X: THE HEATED SEAT IS INOPERATIVE (Continued)

TEST CONDITIONS	TEST DETAILS/RESULTS/ACTIONS
X5 CHECK CIRCUIT 1020 (DG/P) OR CIRCUIT 581 (R) FOR AN OPEN	
1 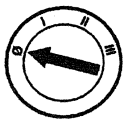 2 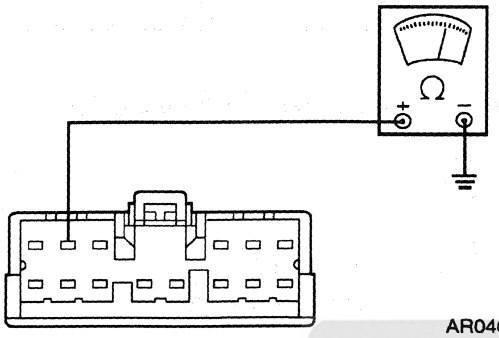 AR0466-B	2 Measure the resistance between the heated seat control module connector Pin C371-2, Circuit 1020 (DG/P), driver or Pin C374-2, Circuit 581 (R), passenger and ground. • Is the resistance reading 10 K ohms or less? → **Yes** GO to **X6.** → **No** REPAIR Circuit 1020 (DG/P) or Circuit 581 (R) for an open. TEST the system for normal operation.
X6 CHECK CIRCUIT 1020 (DG/P) OR CIRCUIT 581 (R) FOR A SHORT TO GROUND	
1 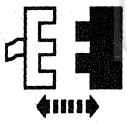 Heated Seat Switch Connector C341, Driver or C340, Passenger 2 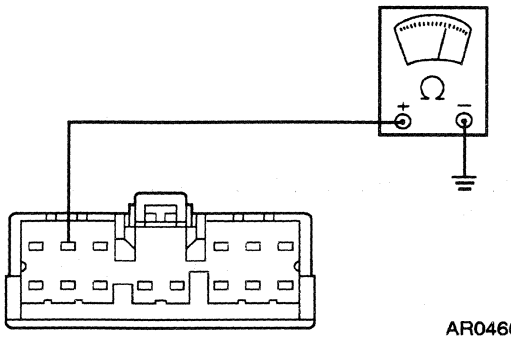 AR0466-B	2 Measure the resistance between the heated seat control module connector Pin C371-2, Circuit 1020 (DG/P), driver or Pin C374-2, Circuit 581 (R), passenger and ground. • Is the resistance reading 10 K ohms or less? → **Yes** REPAIR Circuit 1020 (DG/P) or Circuit 581 (R) for a short to ground. TEST the system for normal operation. → **No** REPLACE the driver heated seat switch. TEST the system for normal operation.

(Continued)

Ford Motor Company

DIAGNOSIS AND TESTING (Continued)

PINPOINT TEST X: THE HEATED SEAT IS INOPERATIVE (Continued)

TEST CONDITIONS	TEST DETAILS/RESULTS/ACTIONS
X7 CHECK CIRCUIT 57 (BK) FOR AN OPEN	
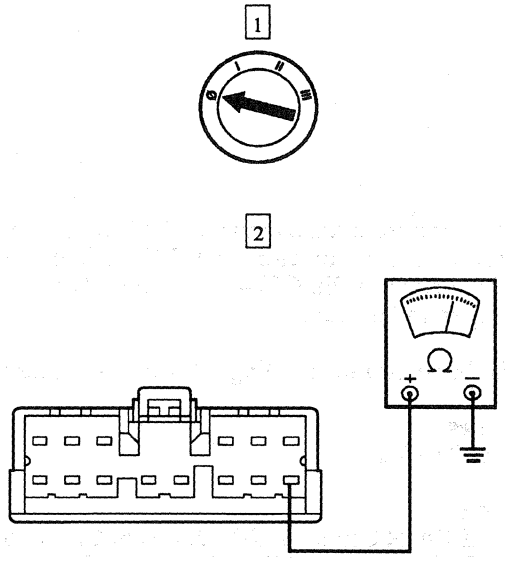 AR0467-B	2 Measure the resistance of Circuit 57 (BK) between the heated seat control module connector Pin C371-14, driver or Pin C374-14, passenger and ground. • Is the resistance reading 5 ohms or less? → **Yes** GO to **X8.** → **No** REPAIR Circuit 57 (BK) for an open. TEST the system for normal operation.
X8 CHECK THE SETTING INPUT	
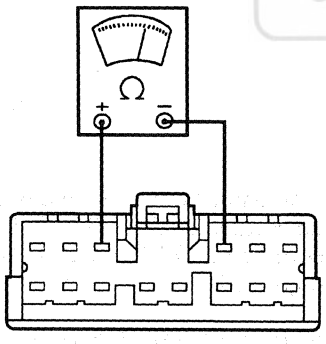 AR0468-B	1 Measure the resistance between the driver heated seat control module connector Pin C371-3, Circuit 1018 (LG/O) and Pin C371-4, Circuit 1019 (T/LB) or the passenger heated seat control module connector Pin C374-3, Circuit 579 (BK/O) and Pin C374-4, Circuit 580 (BR). 2 Turn the suspect heated seat switch to the 1 position. • Is the resistance reading between 2 K and 2.75 K ohms? → **Yes** GO to **X17.** → **No** GO to **X9.**

(Continued)

Official Licensed Product Ford Motor Co.

DIAGNOSIS AND TESTING (Continued)

PINPOINT TEST X: THE HEATED SEAT IS INOPERATIVE (Continued)

TEST CONDITIONS	TEST DETAILS/RESULTS/ACTIONS
X9 CHECK FOR A SYSTEM SHORT	
2 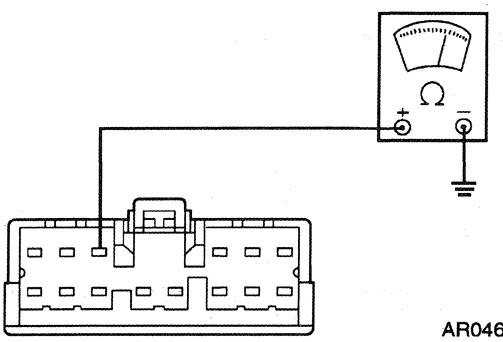 AR0469-B	1 Turn the heated seat switch to OFF. 2 Measure the resistance between the heated seat control module connector Pin C371-3, Circuit 1018 (LG/O), driver or Pin C374-3, Circuit 579 (BK/O), passenger and ground. • Is the resistance reading 10 K ohms or less? → **Yes** GO to **X10.** → **No** GO to **X11.**
X10 CHECK CIRCUIT 1018 (LG/O) OR CIRCUIT 579 (BK/O) FOR A SHORT TO GROUND	
1 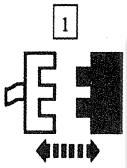 Heated Seat Switch Connector C341, Driver or C340, Passenger 2 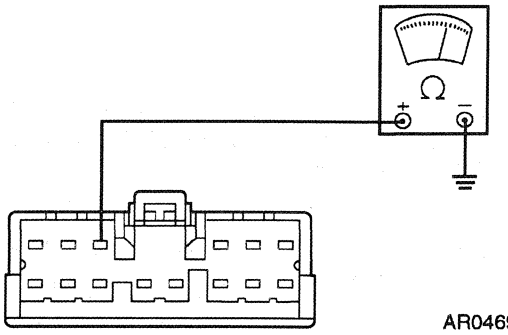 AR0469-B	2 Measure the resistance between the heated seat control module connector Pin C371-3, Circuit 1018 (LG/O), driver or Pin C374-3, Circuit 579 (BK/O), passenger and ground. • Is the resistance reading 10 K ohms or less? → **Yes** REPAIR Circuit 1018 (LG/O) or Circuit 579 (BK/O) for a short to ground. TEST the system for normal operation. → **No** REPLACE the suspect heated seat switch. TEST the system for normal operation.

Official Licensed Product Ford Motor Company

(Continued)

DIAGNOSIS AND TESTING (Continued)

PINPOINT TEST X: THE HEATED SEAT IS INOPERATIVE (Continued)

TEST CONDITIONS	TEST DETAILS/RESULTS/ACTIONS
X11 CHECK CIRCUIT 1019 (T/LB) OR CIRCUIT 580 (BR) FOR A SHORT TO GROUND	
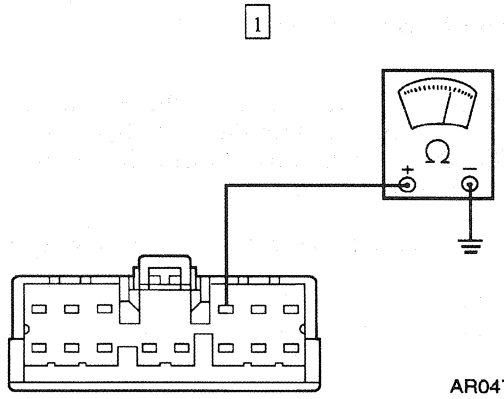	1 Measure the resistance between the heated seat control module connector Pin C371-4, Circuit 1019 (T/LB), driver or Pin C374-4, Circuit 580 (BR), passenger and ground. • Is the resistance reading 10 K ohms or less? → **Yes** GO to **X12.** → **No** GO to **X13** for driver or **X14** for passenger seat.
X12 CHECK THE HEATED SEAT CONTROL SWITCH FOR A SHORT TO GROUND	
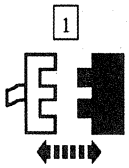 Heated Seat Control Switch Connector C341, Driver or C340, Passenger 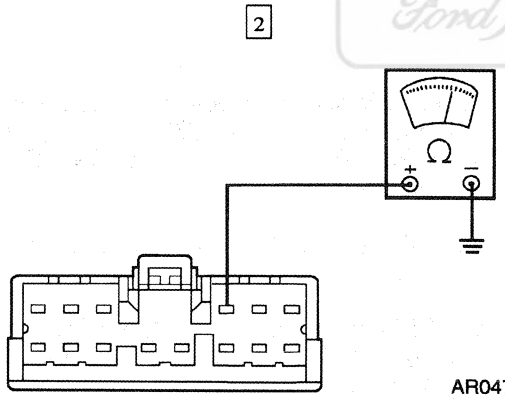	2 Measure the resistance between the heated seat control module connector Pin C371-4, Circuit 1019 (T/LB), driver or Pin C374-4, Circuit 580 (BR), passenger and ground. • Is the resistance reading 10 K ohms or less? → **Yes** REPAIR Circuit 1019 (T/LB) or Circuit 580 (BR) for a short to ground. TEST the system for normal operation. → **No** REPLACE the suspect heated seat switch. TEST the system for normal operation.

Official Licensed Product
Ford Motor Company

(Continued)

DIAGNOSIS AND TESTING (Continued)

PINPOINT TEST X: THE HEATED SEAT IS INOPERATIVE (Continued)

TEST CONDITIONS	TEST DETAILS/RESULTS/ACTIONS
X13 CHECK CIRCUIT 1019 (T/LB) FOR AN OPEN	
1 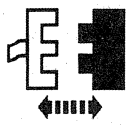 Driver Heated Seat Switch Connector C341 2 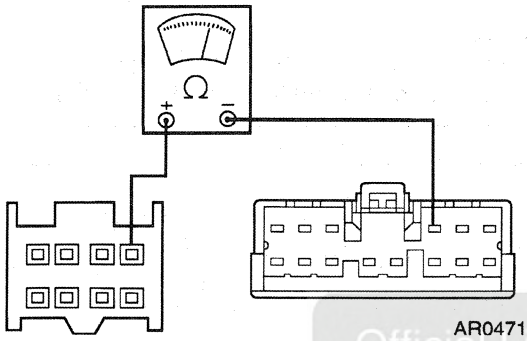 AR0471-B	2 Measure the resistance of Circuit 1019 (T/LB) between the driver heated seat control module connector Pin C371-4 and the driver heated seat switch connector Pin C341-1. • Is the resistance reading 5 ohms or less? → **Yes** GO to **X15.** → **No** REPAIR Circuit 1019 (T/LB) for an open. TEST the system for normal operation.
X14 CHECK CIRCUIT 580 (BR) FOR AN OPEN	
1 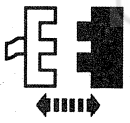 Passenger Heated Seat Switch Connector C340 2 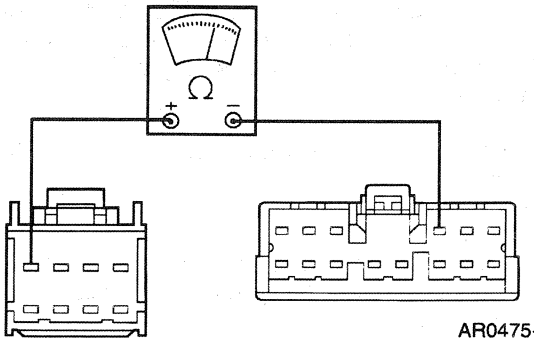 AR0475-B	2 Measure the resistance of Circuit 580 (BR) between the passenger heated seat control module connector Pin C374-4 and the passenger heated seat switch connector Pin C340-8. • Is the resistance reading 5 ohms or less? → **Yes** GO to **X16.** → **No** REPAIR Circuit 580 (BR) for an open. TEST the system for normal operation.

Official Licensed Product
Ford Motor Company

(Continued)

DIAGNOSIS AND TESTING (Continued)

PINPOINT TEST X: THE HEATED SEAT IS INOPERATIVE (Continued)

TEST CONDITIONS	TEST DETAILS/RESULTS/ACTIONS
X15 CHECK CIRCUIT 1018 (LG/O) FOR AN OPEN	
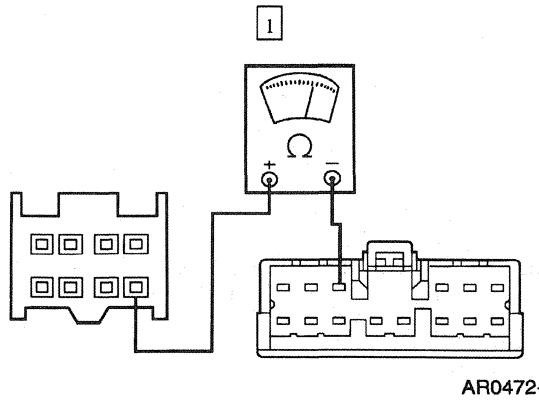 AR0472-B	1 Measure the resistance of Circuit 1018 (LG/O) between the driver heated seat control module connector Pin C371-3 and the driver heated seat switch connector Pin C341-5. • Is the resistance reading 5 ohms or less? → **Yes** REPLACE the driver heated seat switch. TEST the system for normal operation. → **No** REPAIR Circuit 1018 (LG/O) for an open. TEST the system for normal operation.
X16 CHECK CIRCUIT 579 (BK/O) FOR AN OPEN	
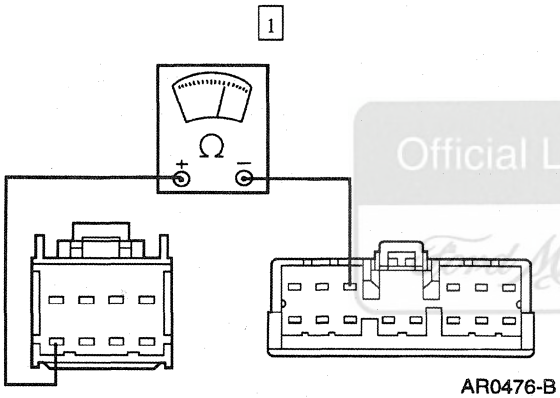 AR0476-B	1 Measure the resistance of Circuit 579 (BK/O) between the passenger heated seat module connector Pin C374-3 and the passenger heated seat switch connector Pin C340-4. • Is the resistance reading 5 ohms or less? → **Yes** REPLACE the passenger heated seat switch. TEST the system for normal operation. → **No** REPAIR Circuit 579 (BK/O) for an open. TEST the system for normal operation.
X17 CHECK THE SEAT BACK CUSHION	
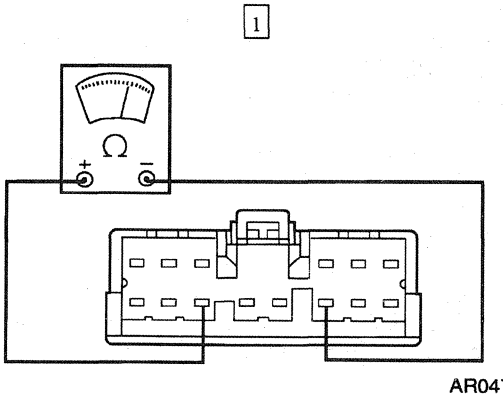 AR0473-B	1 Measure the resistance between the heated seat control module connector Pin C371-12, driver or C374-12, passenger, Circuit 1067 (P/LB) and Pin C371-9, driver or C374-9, passenger, Circuit 1066 (GY/LB). • Is the resistance reading between 2.5 and 10 ohms? → **Yes** REPLACE the suspect heated seat control module. TEST the system for normal operation. → **No** REPAIR the suspect seat back cushion or seat wiring. TEST the system for normal operation.

Official Licensed Product Ford Motor Company

DIAGNOSIS AND TESTING (Continued)

PINPOINT TEST Y: THE HEATED SEATS ARE NOPERATIVE

TEST CONDITIONS	TEST DETAILS/RESULTS/ACTIONS
Y1 CHECK THE IGNITION SUPPLY	
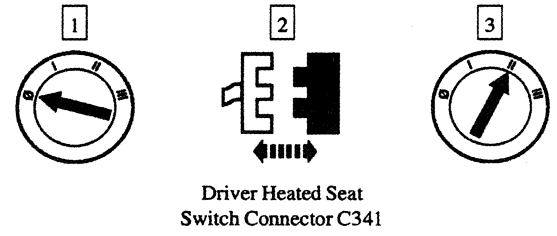 Driver Heated Seat Switch Connector C341 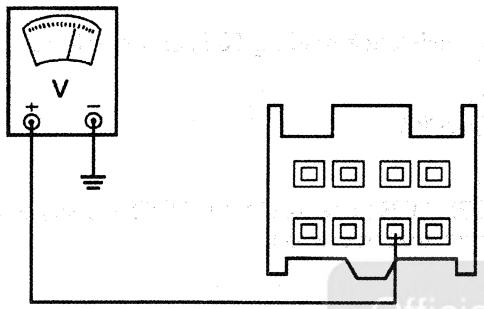	4 Measure the voltage at the driver heated seat connector Pin C341-6, Circuit 1040 (R/LB). • Is the voltage reading B+? → **Yes** GO to **Y6**. → **No** GO to **Y2**.
Y2 CHECK FUSE JUNCTION PANEL FUSE 34 (15A)	
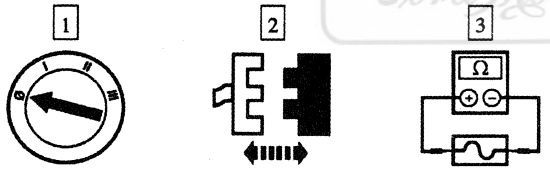 Fuse Junction Panel Fuse 34 (15A) Fuse Junction Panel Fuse 34 (15A)	• Is Fuse 34 (15A) OK? → **Yes** REPAIR Circuit 1040 (R/LB) for an open. TEST the system for normal operation. → **No** GO to **Y3**.

(Continued)

Official Licensed Product Ford Motor Company

DIAGNOSIS AND TESTING (Continued)

PINPOINT TEST Y: THE HEATED SEATS ARE NOPERATIVE (Continued)

TEST CONDITIONS	TEST DETAILS/RESULTS/ACTIONS
Y3 CHECK THE SYSTEM FOR A SHORT	
1 Driver Heated Seat Switch Connector C341 2 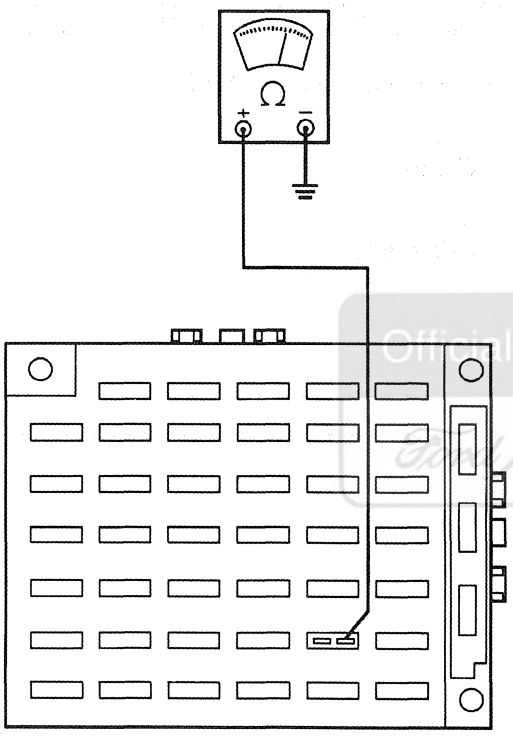 AR0477-A	2 Measure the resistance between the fuse junction panel Fuse 34 output cavity, Circuit 1040 (R/LB) and ground. • Is the resistance reading 10 K ohms or less? → **Yes** GO to **Y4**. → **No** REPLACE Fuse 34 (15A). TEST the system for normal operation.

Official Licensed Product Ford Motor Company

(Continued)

DIAGNOSIS AND TESTING (Continued)

PINPOINT TEST Y: THE HEATED SEATS ARE NOPERATIVE (Continued)

TEST CONDITIONS	TEST DETAILS/RESULTS/ACTIONS
Y4 CHECK THE DRIVER HEATED SEAT SWITCH FOR A SHORT	
1 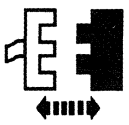 Driver Heated Seat Switch Connector C341 2 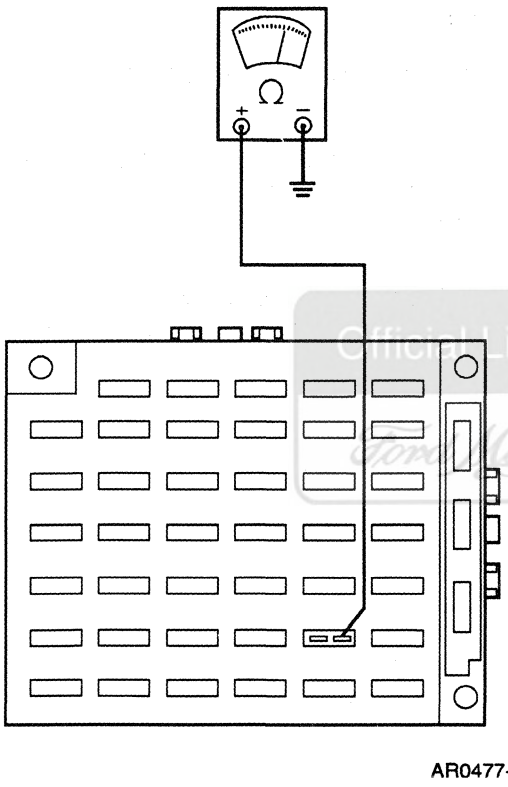 AR0477-A	2 Measure the resistance between the fuse junction panel Fuse 34 output cavity, Circuit 1040 (R/LB) and ground. • Is the resistance reading 10 K ohms or less? → **Yes** GO to **Y5**. → **No** REPLACE the driver heated seat switch. TEST the system for normal operation.

Official Licensed Product
Ford Motor Company

(Continued)

DIAGNOSIS AND TESTING (Continued)

PINPOINT TEST Y: THE HEATED SEATS ARE NOPERATIVE (Continued)

TEST CONDITIONS	TEST DETAILS/RESULTS/ACTIONS
Y5 CHECK THE PASSENGER HEATED SEAT SWITCH FOR A SHORT	
1 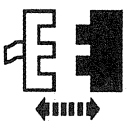 Passenger Heated Seat Switch Connector C340 2 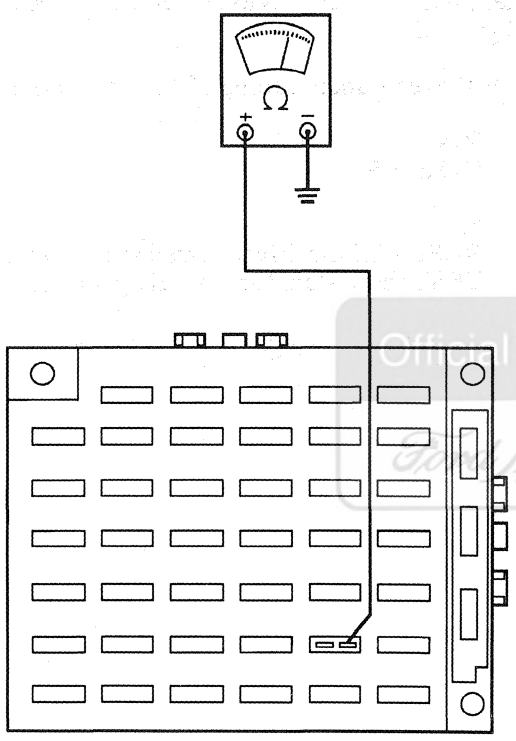 AR0477-A	2 Measure the resistance between the fuse junction panel Fuse 34 output cavity, Circuit 1040 (R/LB) and ground. • Is the resistance reading 10 K ohms or less? → **Yes** REPAIR Circuit 1040 (R/LB) for a short to ground. TEST the system for normal operation. → **No** REPLACE the passenger heated seat switch. TEST the system for normal operation.

Official Licensed Product Ford Motor Company

(Continued)

DIAGNOSIS AND TESTING (Continued)

PINPOINT TEST Y: THE HEATED SEATS ARE NOPERATIVE (Continued)

TEST CONDITIONS	TEST DETAILS/RESULTS/ACTIONS
Y6 CHECK OPERATION	
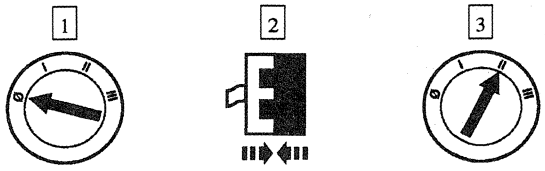 Driver Heated Seat Switch Connector C341	4 Turn the driver and the passenger heated seats on. • Do both heated seats operate? → **Yes** The system is operating properly at this time. → **No** REFER to the Symptom Chart to diagnose the inoperative heated seat function.

PINPOINT TEST Z: THE HEATED SEAT CUSHION IS INOPERATIVE

TEST CONDITIONS	TEST DETAILS/RESULTS/ACTIONS
Z1 CHECK THE INPUT TO THE HEATED SEAT MODULE	
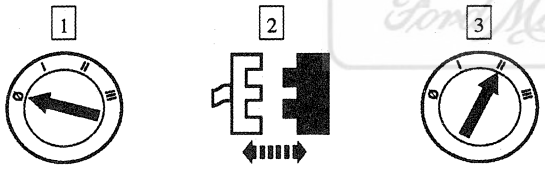 Heated Seat Module Connector C371, Driver or C374, Passenger	4 Turn the suspect heated seat switch to the 1 position. 5 Push the seat cushion enable button.

(Continued)

Unofficial Licensed Ford Motor Company

DIAGNOSIS AND TESTING (Continued)

PINPOINT TEST Z: THE HEATED SEAT CUSHION IS INOPERATIVE (Continued)

TEST CONDITIONS	TEST DETAILS/RESULTS/ACTIONS
Z1 CHECK THE INPUT TO THE HEATED SEAT MODULE (Continued)	
6 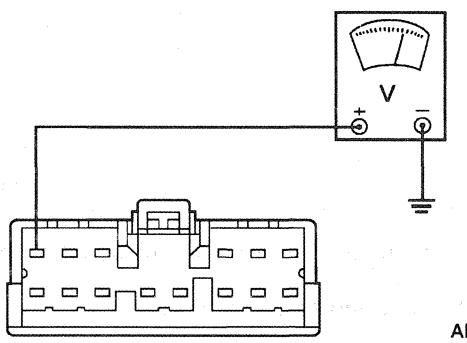 AR0484-B	6 Measure the voltage at the heated seat module connector Pin C371-1, driver or C374-1, passenger, Circuit 1255 (W/R). • Is the voltage reading B+? → **Yes** GO to **Z5**. → **No** GO to **Z2**.
Z2 CHECK CIRCUIT 1255 (W/R) FOR A SHORT TO GROUND	
1 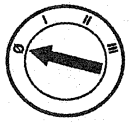 2 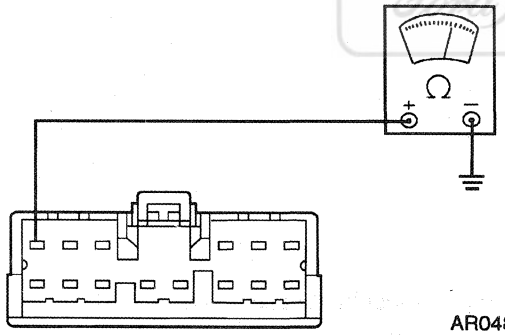 AR0485-B	2 Measure the resistance between the heated seat module connector Pin C371-1, driver or C374-1, passenger, Circuit 1255 (W/R) and ground. • Is the resistance reading 10 K ohms or less? → **Yes** REPAIR Circuit 1255 (W/R) for a short to ground. TEST the system for normal operation. → **No** GO to **Z3** for driver or **Z4** for passenger.

Official Licensed Product
Ford Motor Company

(Continued)

DIAGNOSIS AND TESTING (Continued)

PINPOINT TEST Z: THE HEATED SEAT CUSHION IS INOPERATIVE (Continued)

TEST CONDITIONS	TEST DETAILS/RESULTS/ACTIONS
Z3 CHECK CIRCUIT 1255 (W/R) FOR AN OPEN	
1 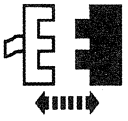 Driver Heated Seat Switch Connector C341 2 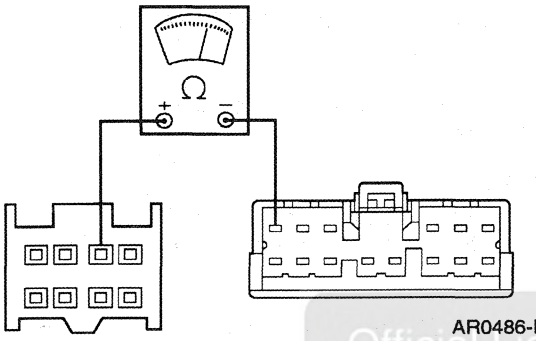 AR0486-B	2 Measure the resistance of Circuit 1255 (W/R) between the driver heated seat module connector Pin C371-1, and the driver heated seat switch connector Pin C341-2. • Is the resistance reading 5 ohms or less? → **Yes** REPLACE the driver heated seat switch. TEST the system for normal operation. → **No** REPAIR Circuit 1255 (W/R) for a short to ground. TEST the system for normal operation.
Z4 CHECK FOR AN OPEN	
1 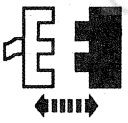 Passenger Heated Seat Switch Connector C340 2 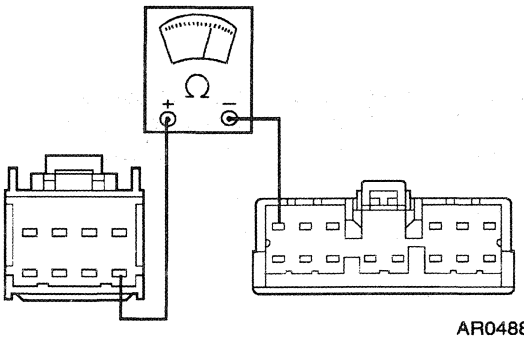 AR0488-B	2 Measure the resistance of Circuit 1255 (W/R) between the passenger heated seat module connector Pin C374-1, and the passenger heated seat switch connector Pin C340-1. • Is the resistance reading 5 ohms or less? → **Yes** REPLACE the passenger heated seat switch. TEST the system for normal operation. → **No** REPAIR Circuit 1255 (W/R) for a short to ground. TEST the system for normal operation.

(Continued)

Official Licensed Ford Motor Company

DIAGNOSIS AND TESTING (Continued)

PINPOINT TEST Z: THE HEATED SEAT CUSHION IS INOPERATIVE (Continued)

TEST CONDITIONS	TEST DETAILS/RESULTS/ACTIONS
Z5 CHECK THE SEAT CUSHION ELEMENT	
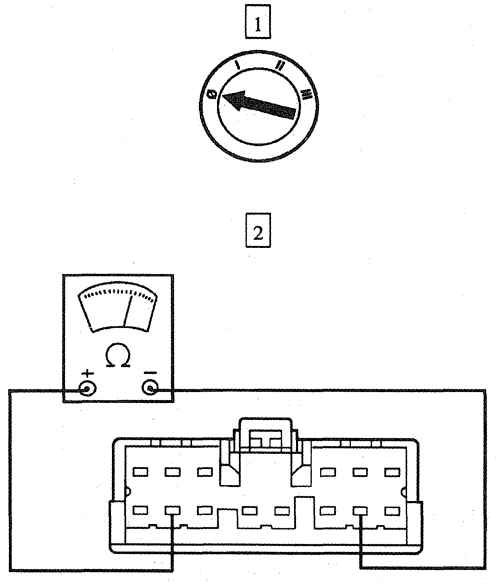 AR0487-B	2 Measure the resistance between the heated seat module connector Pin C371-8, driver or Pin C374-8, passenger, Circuit 1064 (Y/LB) and Pin C371-13, driver or Pin C374-13, passenger, Circuit 1065 (W/LB). • Is the resistance reading between 2.5 and 10 ohms? → **Yes** REPLACE the suspect heated seat module. TEST the system for normal operation. → **No** REPAIR the suspect seat cushion element or wiring. TEST the system for normal operation.

PINPOINT TEST AA: THE POWER LUMBAR IS INOPERATIVE

TEST CONDITIONS	TEST DETAILS/RESULTS/ACTIONS
AA1 CHECK THE POWER SUPPLY	
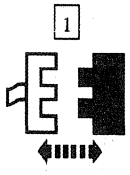 Power Lumbar Switch Connector C345, Driver or C344, Passenger 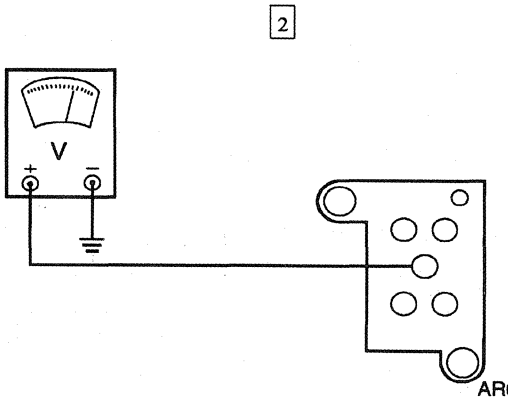 AR0478-B	2 Measure the voltage at the power lumbar switch connector Pin C345-3, Circuit 490 (R), driver or Pin C344-3, Circuit 517 (BK/W), passenger. • Is the voltage reading B+? → **Yes** GO to **AA2**. → **No** REPAIR Circuit 490 (R) or Circuit 517 (BK/W) for an open. TEST the system for normal operation.

(Continued)

DIAGNOSIS AND TESTING (Continued)

PINPOINT TEST AA: THE POWER LUMBAR IS INOPERATIVE (Continued)

TEST CONDITIONS	TEST DETAILS/RESULTS/ACTIONS
AA2 CHECK CIRCUIT 57 (BK) FOR AN OPEN	
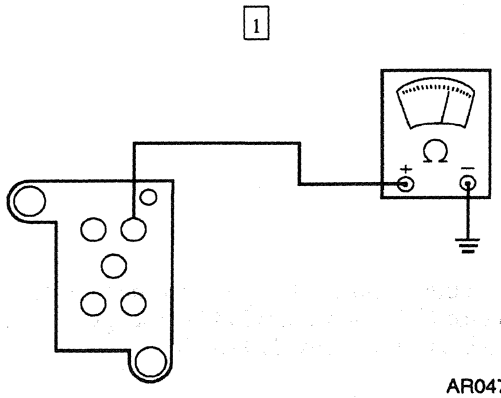 AR0479-B	1 Measure the resistance between the power lumbar switch connector Pin C345-2, driver or C344-2, passenger, Circuit 57 (BK) and ground. • Is the resistance reading 5 ohms or less? → **Yes** GO to **AA3**. → **No** REPAIR Circuit 57 (BK) for an open. TEST the system for normal operation.
AA3 CHECK THE SWITCH GROUND	
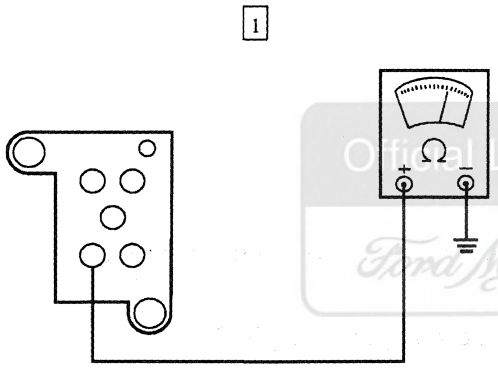 AR0480-B	1 Measure the resistance between the power lumbar switch connector Pin C345-4, driver or C344-4, passenger, Circuit 57 (BK) and ground. • Is the resistance reading 5 ohms or less? → **Yes** GO to **AA4**. → **No** REPAIR Circuit 57 (BK) for an open. TEST the system for normal operation.

Official Licensed Product
Ford Motor Company

(Continued)

DIAGNOSIS AND TESTING (Continued)

PINPOINT TEST AA: THE POWER LUMBAR IS INOPERATIVE (Continued)

TEST CONDITIONS	TEST DETAILS/RESULTS/ACTIONS
AA4 CHECK CIRCUIT 116 (R/BK)	
 Power Lumbar Switch Connector C345, Driver or C344 Passenger 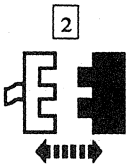 Power Lumbar Motor Connector C337 Driver or C334 Passenger 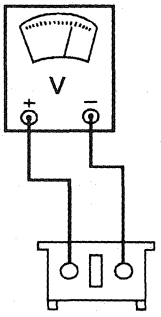 AR0481-A	3 Measure the voltage at the power lumbar motor Connector C337 driver or C334 passenger, Circuit 116 (R/BK) and Circuit 899 (R/W). 4 Press the power lumbar switch to the OUT position. • Is the voltage reading B+? → **Yes** REPLACE the suspect power lumbar motor. TEST the system for normal operation. → **No** GO to **AA5**.
AA5 CHECK CIRCUIT 116 (R/BK) FOR AN OPEN	
	1 Make sure the power lumbar switch is in the neutral position.

(Continued)

Official Licensed Product
Ford Motor Company

DIAGNOSIS AND TESTING (Continued)

PINPOINT TEST AA: THE POWER LUMBAR IS INOPERATIVE (Continued)

TEST CONDITIONS	TEST DETAILS/RESULTS/ACTIONS
AA5 CHECK CIRCUIT 116 (R/BK) FOR AN OPEN (Continued)	
2 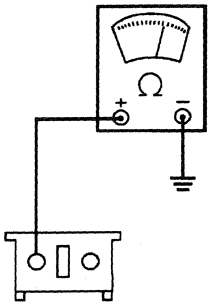 AR0482-A	2 Measure the resistance between the power lumbar motor Connector C337 driver or C334 passenger, Circuit 116 (R/BK) and ground. • Is the resistance reading 5 ohms or less? → **Yes** GO to **AA6**. → **No** REPAIR Circuit 116 (R/BK) for an open. TEST the system for normal operation.
AA6 CHECK CIRCUIT 899 (R/W) FOR AN OPEN	
2 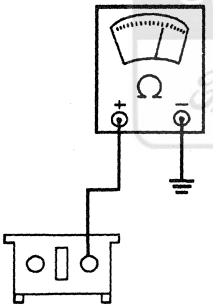 AR0483-A	1 Make sure the power lumbar switch is in the neutral position. 2 Measure the resistance between the power lumbar motor Connector C337 driver or C334 passenger, Circuit 899 (R/W) and ground. • Is the resistance reading 5 ohms or less? → **Yes** REPLACE the suspect power lumbar switch. TEST the system for normal operation. → **No** REPAIR Circuit 899 (R/W) for an open. TEST the system for normal operation.

Official Licensed Ford Motor Company

REMOVAL AND INSTALLATION

Switch — Seat Regulator Control

Removal

1. Disconnect the battery ground cable (14301).

REMOVAL AND INSTALLATION (Continued)

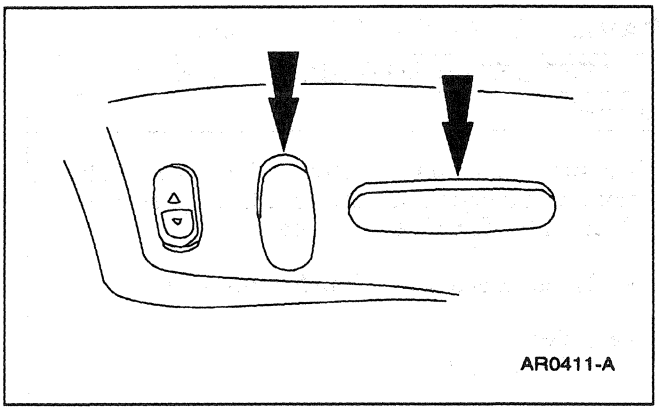

2. Remove the power seat regulator control knobs (14711).

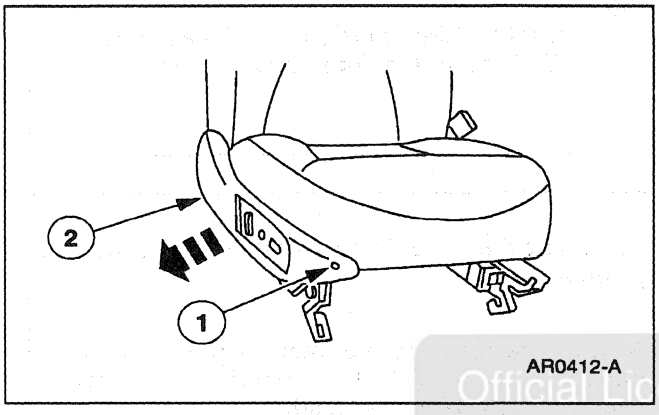

3. Remove the front seat cushion side shield (62186).
   1 Uncover and remove the two screws.
   2 Remove the front seat cushion side shield.

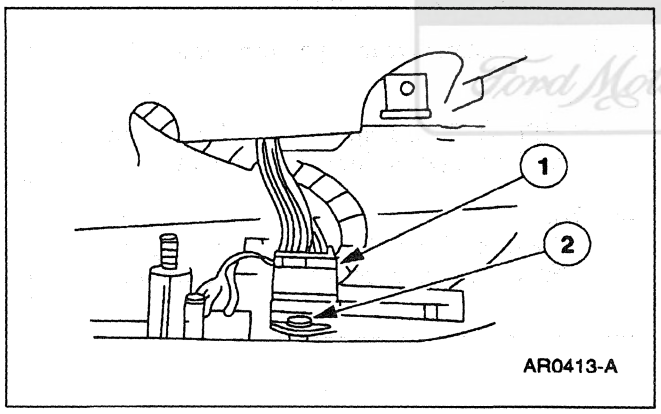

4. Remove the seat control switch (14C715).
   1 Disconnect the electrical connector.
   2 Remove the three screws.

Installation

1. Follow the removal procedure in reverse order.

Armrest — Rear

Removal

1. Remove the rear seat back pad and frame; refer to Seat—Rear in this section.

Official Licensed Product Ford Motor Company

REMOVAL AND INSTALLATION (Continued)

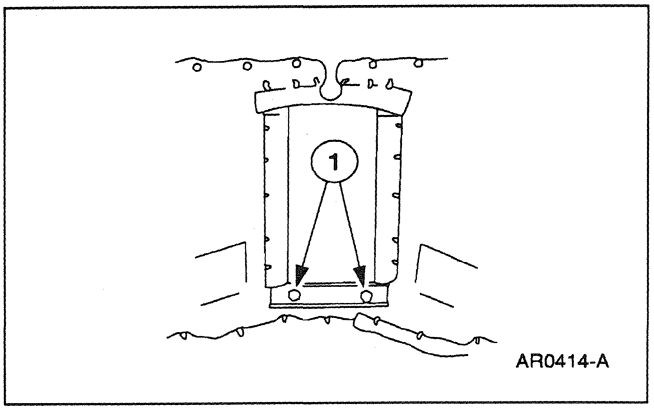

2. Remove the armrest.
   1 Remove the nuts.
   2 Remove the armrest.

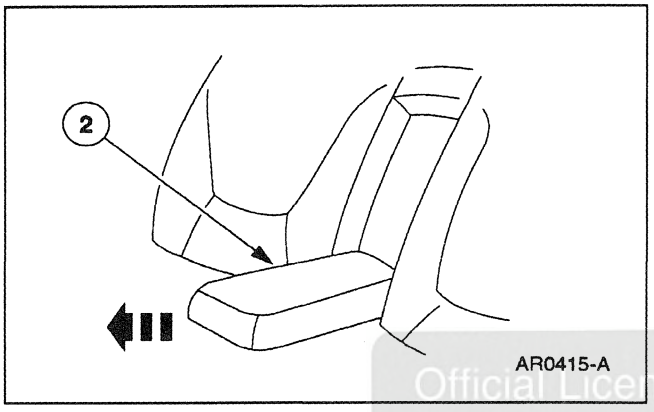

Official Licensed Product
Ford Motor Company

Installation

1. Follow the removal procedure in reverse order.

Seat — Front

Removal

1. Disconnect the battery ground cable (14301).

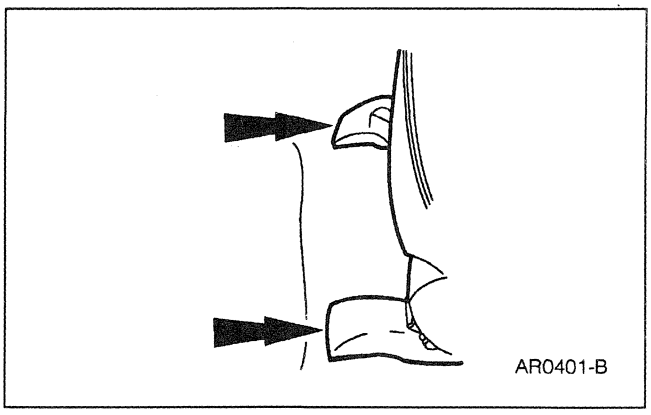

2. Remove the front and rear front seat track to floor insulators (61748).

REMOVAL AND INSTALLATION (Continued)

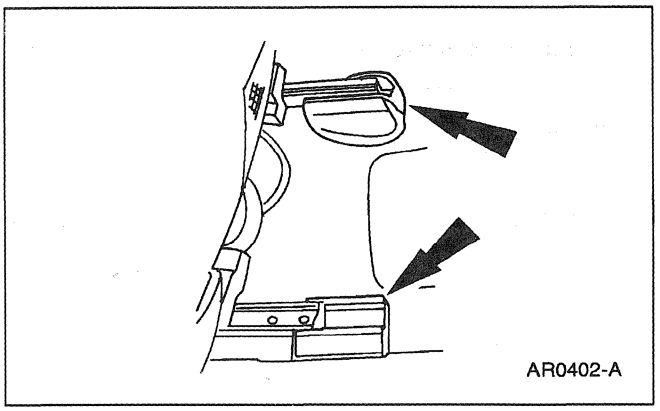

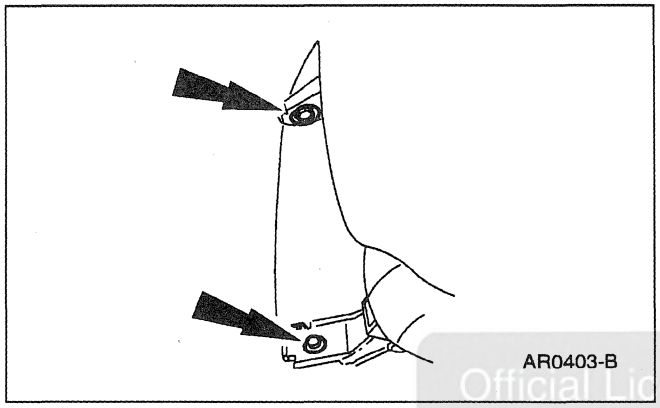

3. Remove the bolts.

Official Licensed Product
Ford Motor Company

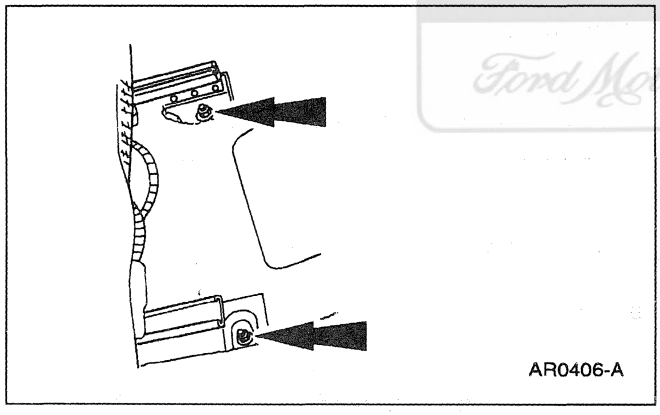

4. ⚠ **CAUTION: Use care when handling the seat and track assembly. Dropping the assembly or sitting on a seat not secured in the vehicle may result in damaged components.**
   Remove the nuts.

5. Disconnect the three electrical connectors.

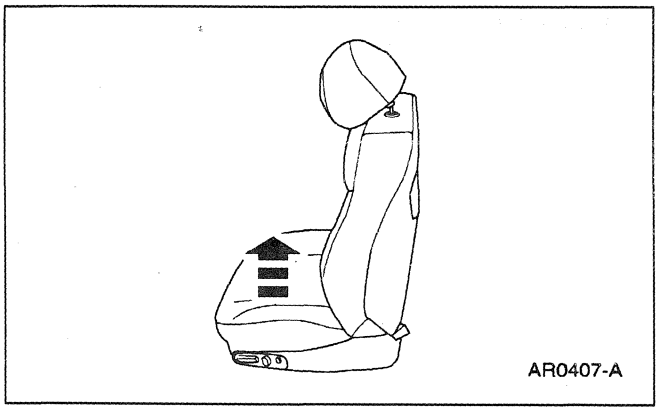

6. Remove the front seat from the vehicle.

REMOVAL AND INSTALLATION (Continued)

Installation

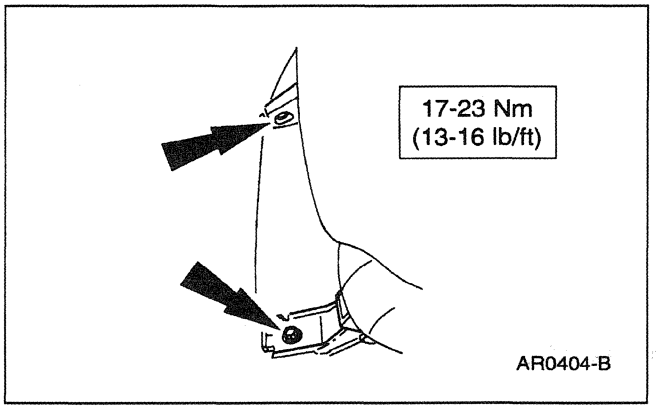

1. Follow the removal procedure in reverse order.

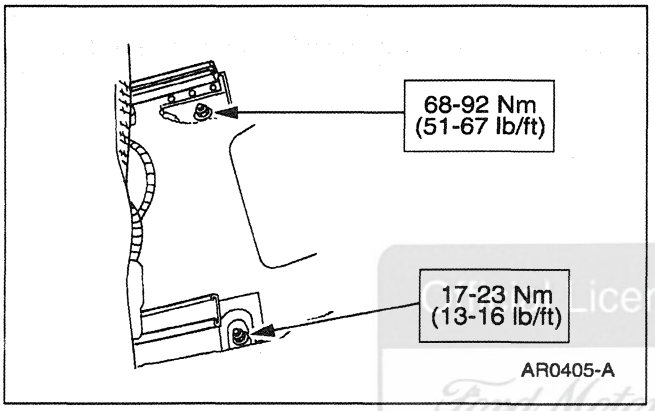

Ford Licensed Product
Ford Motor Company

Seat — Rear

Removal

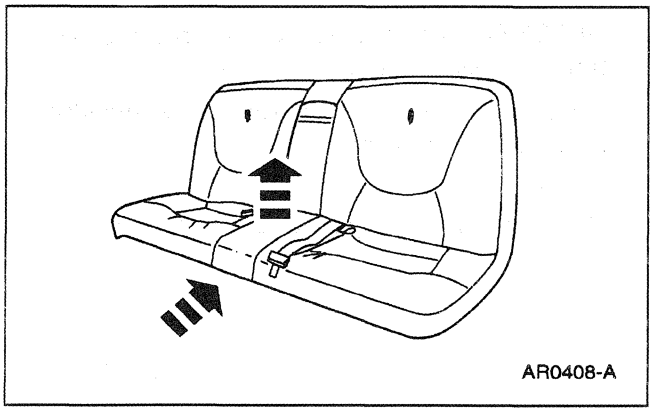

1. Remove the rear seat cushion pad and frame (600A88).
   - Apply pressure to the lower front portion of the rear seat cushion pad and frame.
   - Push the rear seat cushion pad and frame rearward to disengage the rear seat cushion front retainers (63370).

REMOVAL AND INSTALLATION (Continued)

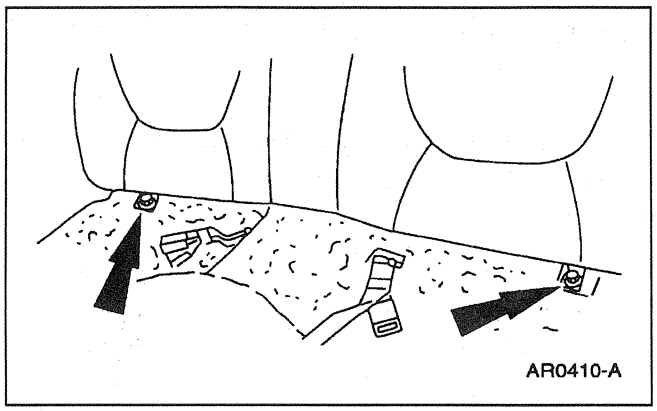

2. Remove the bolts and the rear seat back pad and frame back.

Installation

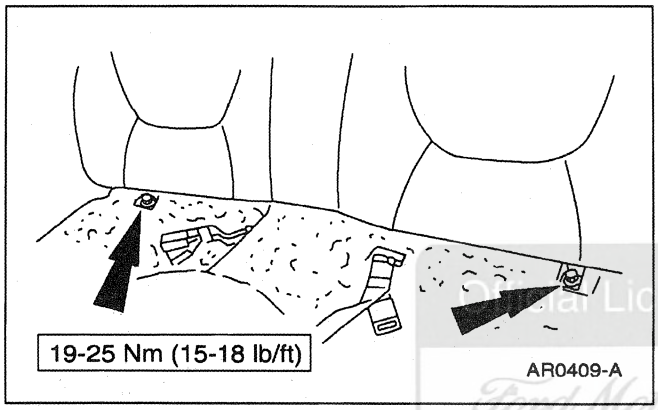

1. Follow the removal procedure in reverse order.

Ford Motor Company Official Licensed Product

Latch — Front Seat Back

Removal

1. **NOTE:** Position the seat to obtain access to the front and rear of the seat.

   Position the front seat back pad adjuster (65500) in the full-down position.

2. Disconnect the battery ground cable (14301).

REMOVAL AND INSTALLATION (Continued)

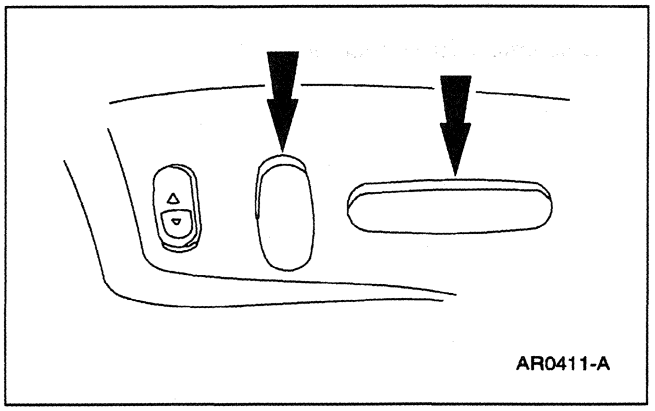

3. Remove the power seat regulator control knobs (14711).

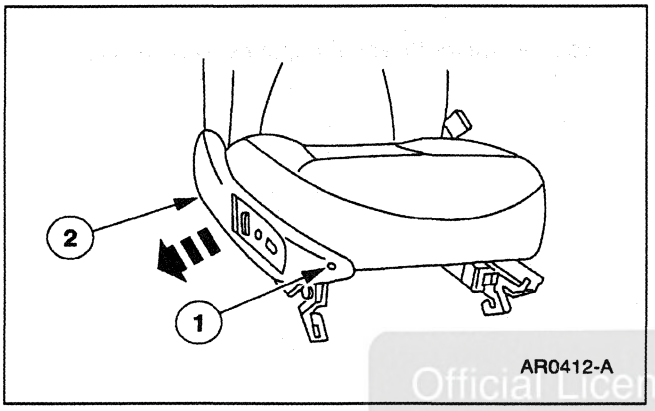

4. Disengage the front seat cushion side shield (62186).
   1 Uncover and remove the two screws.
   2 Disengage the front seat cushion side shield.

Official Licensed Product
Ford Motor Company

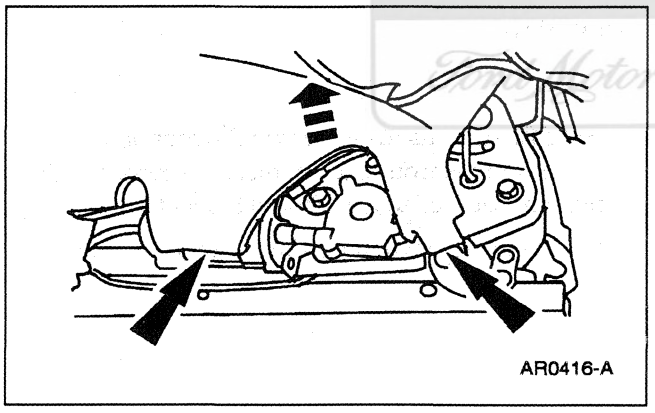

5. Detach the front seat cushion cover (62900).

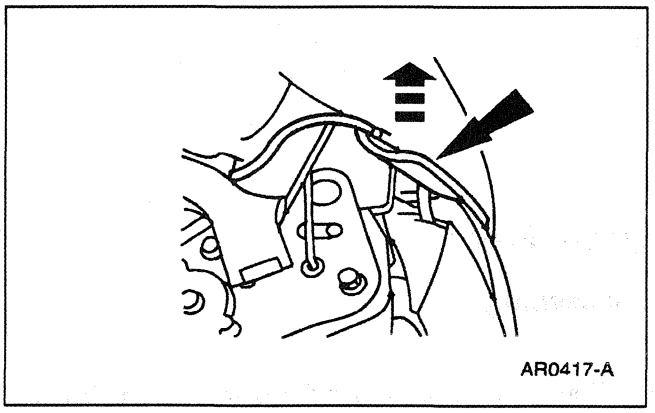

6. Detach the front seat back cover (64416).

REMOVAL AND INSTALLATION (Continued)

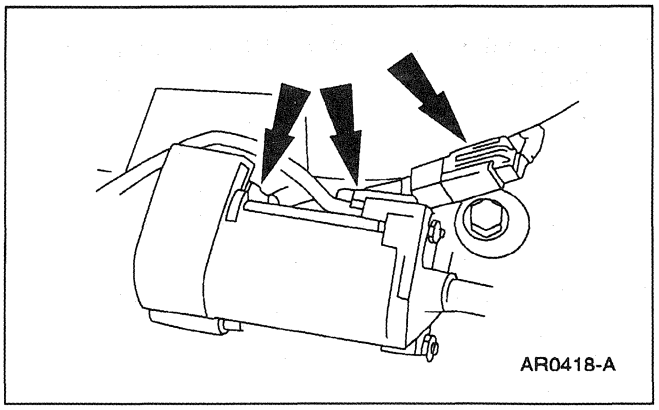

7. Disconnect the connectors.

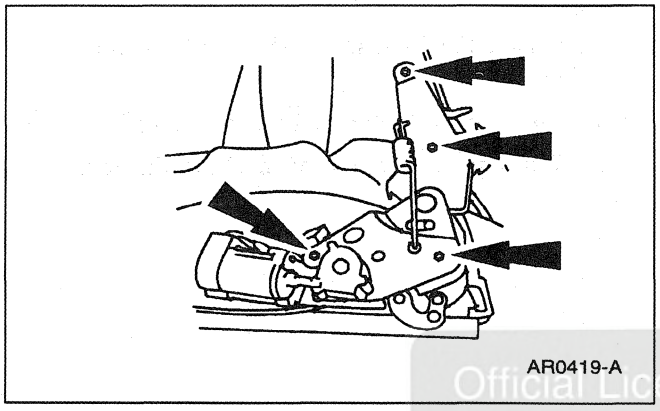

8. Remove the bolts and the front seat back latch (62648).

Official Licensed Product
Ford Motor Company

Installation

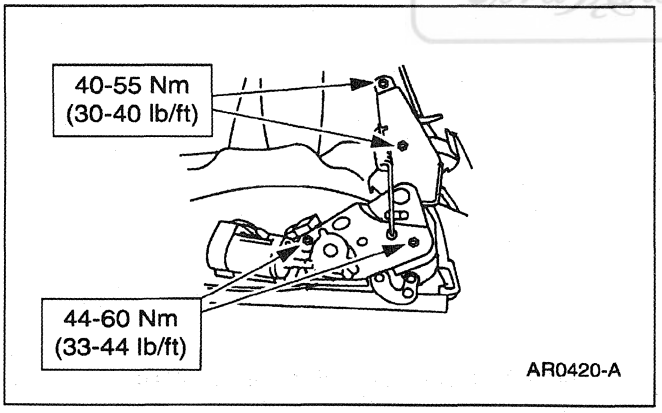

1. **NOTE:** After hand-tightening the four bolts, make sure the front-back hook at the inboard side remains secured to the inboard bracket.

   Follow the removal procedure in reverse order.

DISASSEMBLY AND ASSEMBLY

Seat — Front

Disassembly

1. Remove the front seat; refer to Seat—Front in this section.

DISASSEMBLY AND ASSEMBLY (Continued)

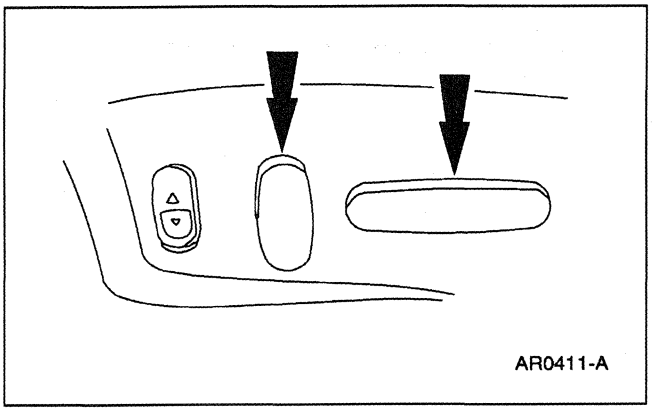

2. Remove the two power seat regulator control knobs (14711).

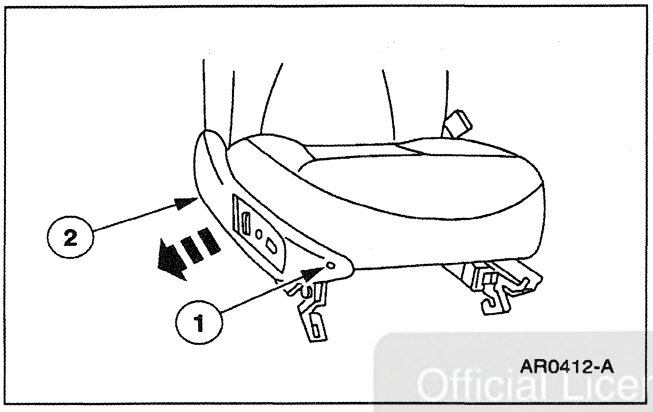

3. Remove the front seat cushion side shield (62186).
   1 Uncover and remove the two screws.
   2 Remove the front seat cushion side shield.

Official Licensed Product
Ford Motor Company

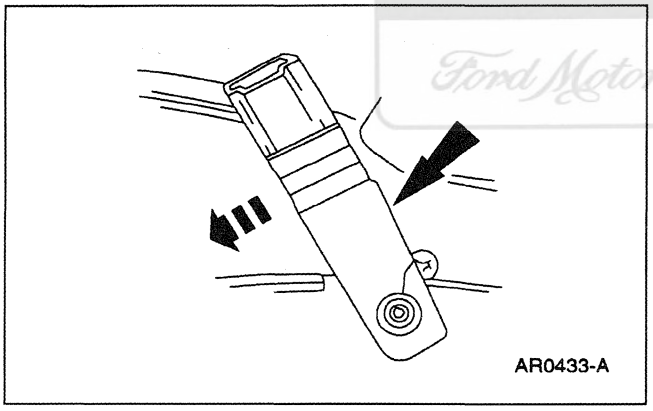

4. Remove the front safety belt buckle end (61203).

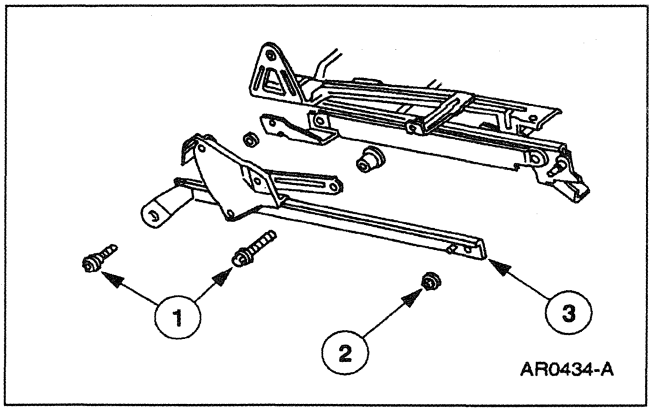

5. Remove the front safety belt buckle support (610C84).
   1 Remove the screws.
   2 Remove the nut.
   3 Remove the front safety belt buckle support.

DISASSEMBLY AND ASSEMBLY (Continued)

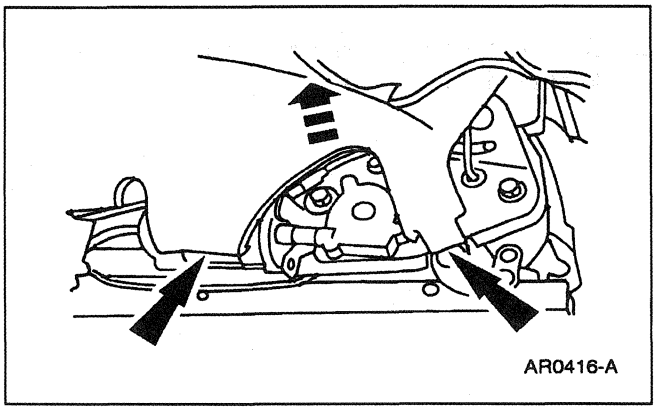

6. Release the seat cushion cover j-clips.

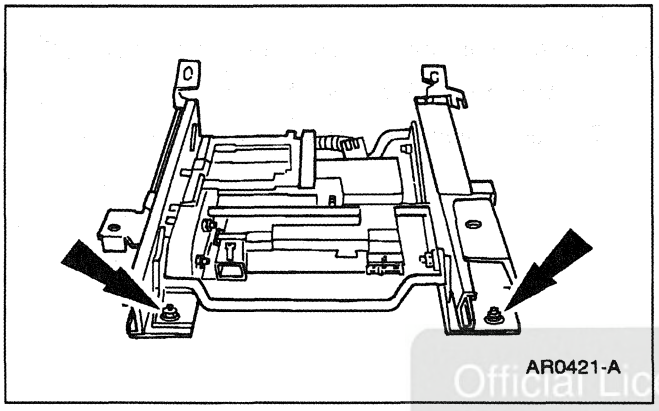

7. Remove the nuts and the seat track.

Official Licensed Product
Ford Motor Company

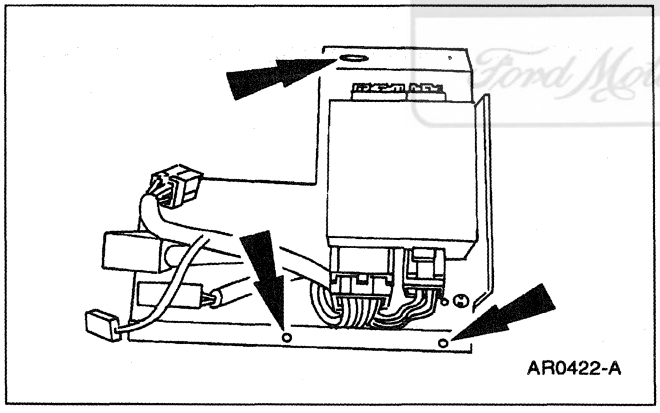

8. Remove the screws and the module tray.

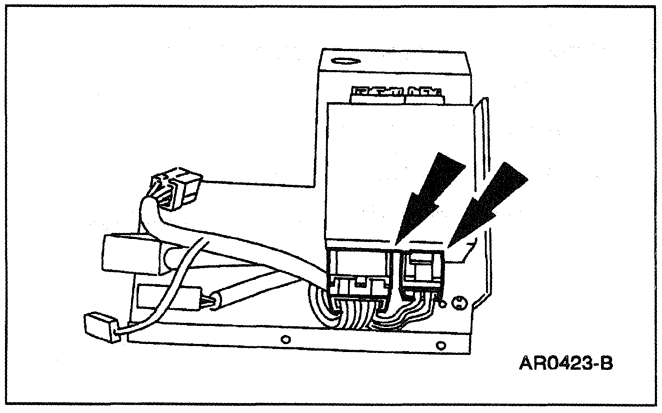

9. Disconnect the connectors.

DISASSEMBLY AND ASSEMBLY (Continued)

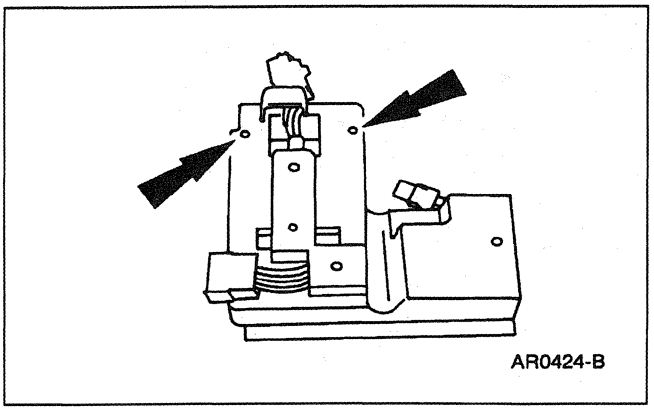

10. Turn the module over and remove the screws.

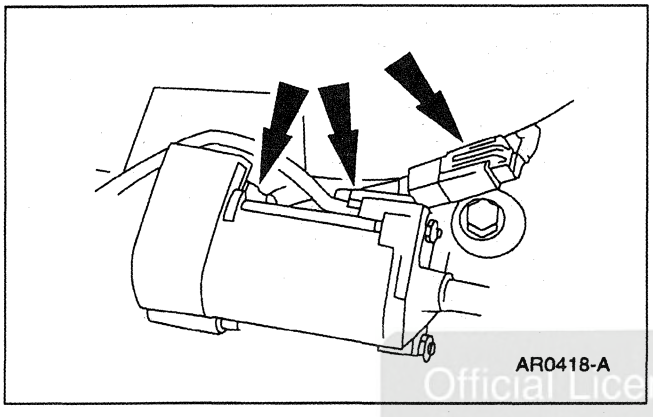

11. Disconnect the front seat back latch connectors.

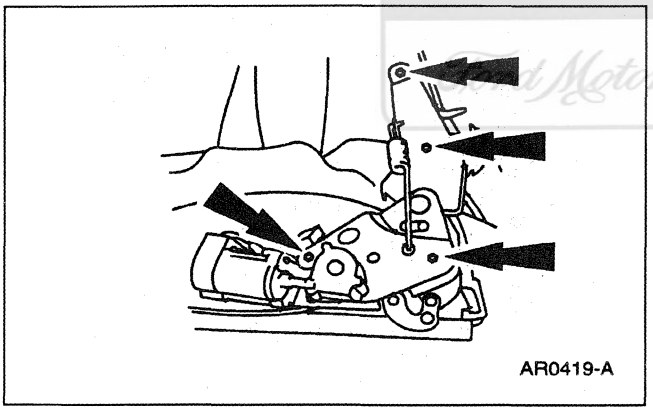

12. Remove the bolts and the front seat back latch (62648).

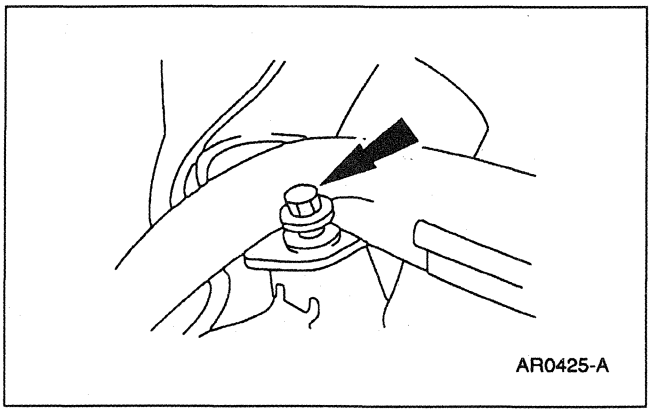

13. Remove the front seat back inboard pivot bolt. Disconnect the connectors and remove the front seat back (64810) from the front seat cushion frame and spring (63100).

Official Licensed Product
Ford Motor Company

DISASSEMBLY AND ASSEMBLY (Continued)

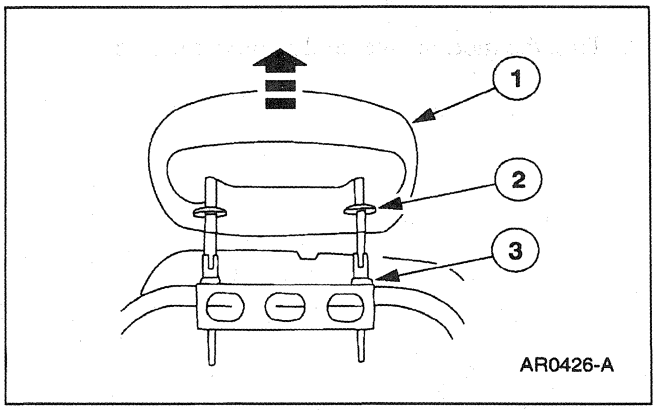

14. Remove the front seat back head restraint (611A08).
    1 Pull the front seat back head restraint up.
    2 Release the front seat head rest guide rod sleeve (610A16).
    3 Remove the clips and the front seat back head restraint.

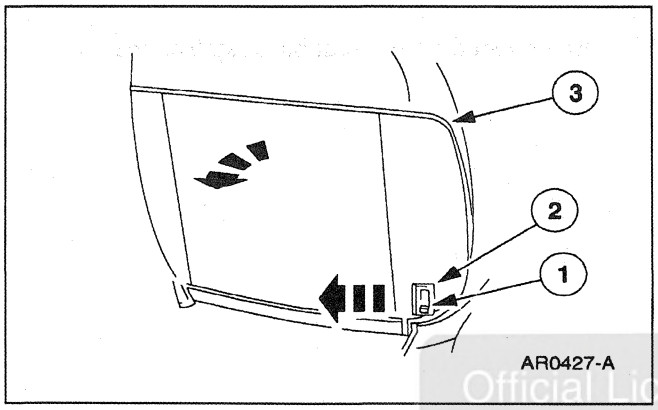

15. Remove the back of the front seat back cover (64416) .
    1 Remove the front seat back latch handle knob (62762).
    2 Remove the front seat back latch handle bezel (62672).
    3 Remove the back of the front seat back cover.

Official Licensed Product
Ford Motor Company

16. Disengage the J-retainers and unfasten the Velcro® to remove the front seat back cover.

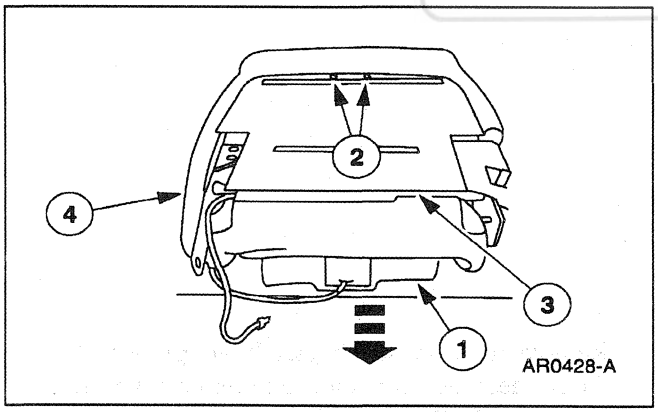

17. Disassemble the front seat back .
    1 Remove the heat element assembly.
    2 Remove the pushpins.
    3 Remove the front seat back rear panel.
    4 Remove the front seat back pad.

DISASSEMBLY AND ASSEMBLY (Continued)

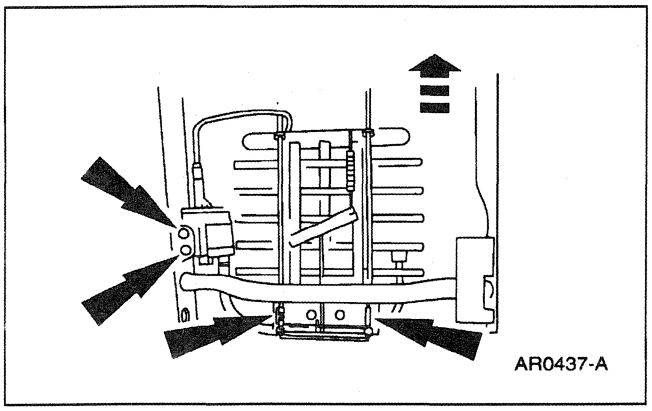

18. Remove the clips, the rivets and the front seat back pad adjuster (65500).

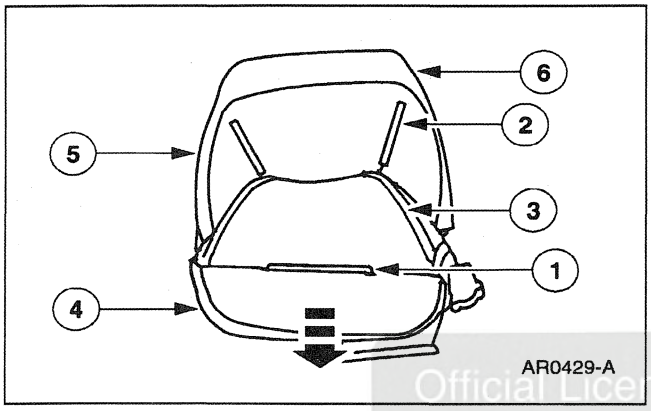

19. Disassemble the front seat cushion frame and spring .
    1 Disengage the J-retainers.
    2 Unfasten the Velcro®.
    3 Remove the hog rings.
    4 Remove the front seat cushion cover (62900).
    5 Remove the front seat cushion heat element.
    6 Remove the front seat cushion pad (632A22).

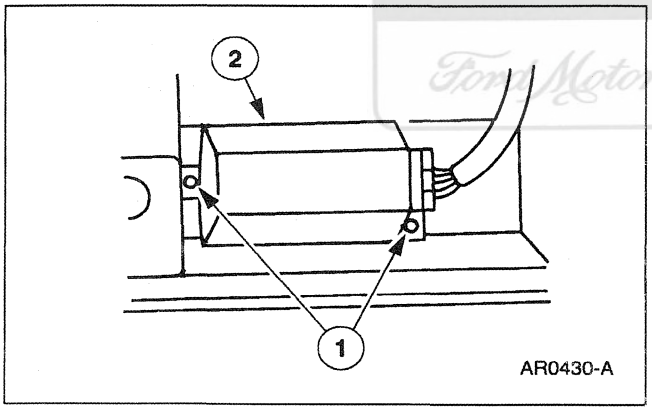

20. Remove the heated seat module.
    1 Remove the rivets.
    2 Remove the heated seat module.

Official Licensed Product
Ford Motor Company

Assembly

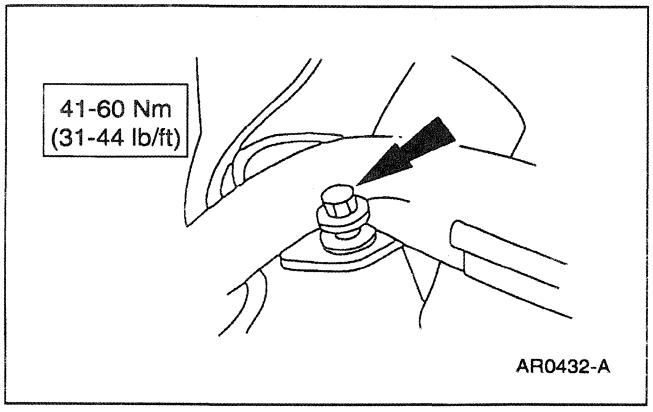

1. Follow the disassembly procedure in reverse order.

DISASSEMBLY AND ASSEMBLY (Continued)

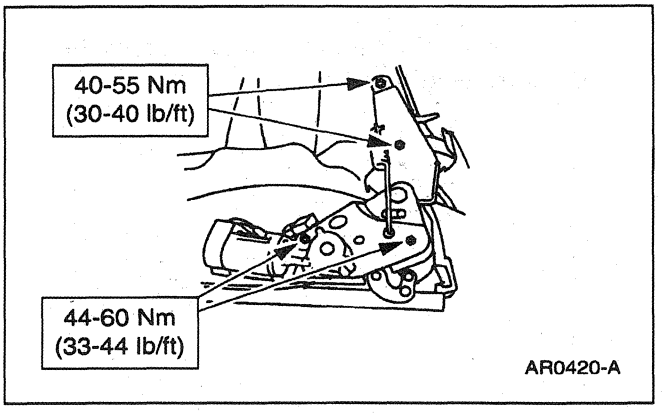

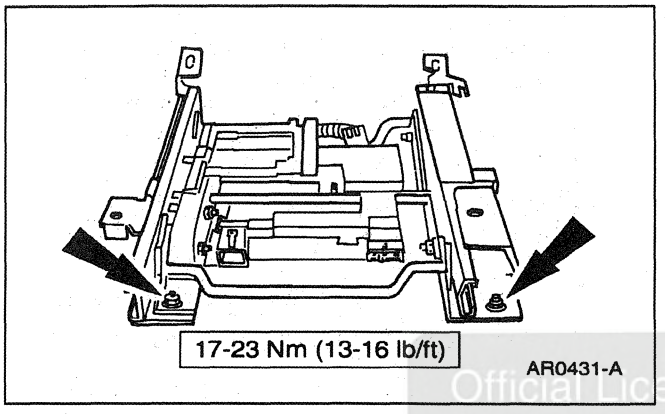

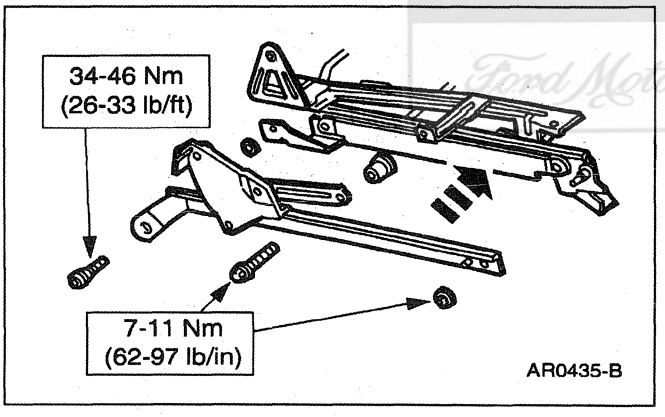

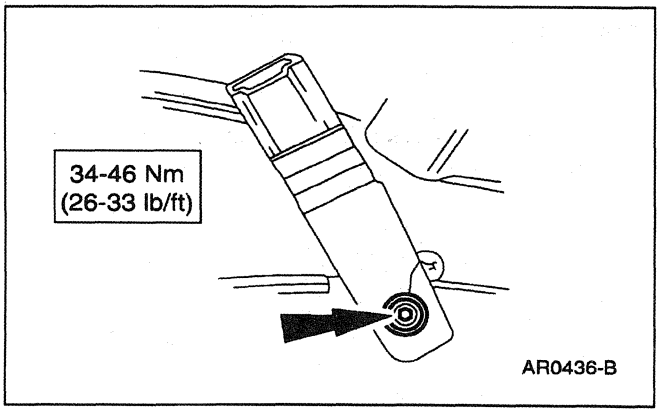

Official Licensed Product
Ford Motor Company

SPECIFICATIONS

Torque Specifications

Description	Nm	Lb/Ft	Lb/In
Front Seat Track to Floorpan Bolts	17-23	13-16	—
Outboard Front Seat Track to Floorpan Nut - Rear	17-23	13-16	—
Inboard Front Seat Track to Floorpan Nut - Rear	68-92	51-67	—
Rear Seat Back Retaining Bolts	19-25	15-18	—
Front Seat Inboard Pivot Bolt	41-60	31-44	—
Front Seat Back Latch to Front Seat Back Frame Bolt	40-55	30-40	—
Front Seat Back Latch to Front Seat Cushion Frame Bolt	44-60	33-44	—

(Continued)

Torque Specifications

Description	Nm	Lb/Ft	Lb/In
Front Seat Track to Front Seat Cushion Frame Nut	17-23	13-16	—
Safety Belt Buckle Support to Front Seat Cushion Frame Bolt	34-46	26-33	—
Safety Belt Buckle Support to Front Seat Cushion Frame Bolt	7-11	—	62-97
Safety Belt Buckle Support to Front Seat Cushion Frame Nut	7-11	—	62-97
Safety Belt Buckle Bolt	34-46	26-33	—

Official Licensed Product
Ford Motor Company

SECTION 501-11 Glass, Frames and Mechanisms

VEHICLE APPLICATION: Mark VIII

SUBJECT	PAGE
DESCRIPTION AND OPERATION	
Glass — Windshield	501-11-2
DIAGNOSIS AND TESTING	
Glass, Frames and Mechanisms	501-11-3
Component Tests	501-11-66
Inspection and Verification	501-11-4
Pinpoint Tests	501-11-10
Symptom Chart	501-11-9
REMOVAL AND INSTALLATION	
Door Glass Run Retainer	501-11-82
Door Glass Top Run	501-11-82
Switch — Heated Back Window	501-11-67
Switch — Window Regulator Control	501-11-68
Window Glass — Back	501-11-71
Window Glass — Door	501-11-68
Window Glass — Rear Quarter	501-11-70
Window Regulator — Power	501-11-77
Windshield Glass	501-11-84
GENERAL PROCEDURES	
Grid Wire Repair — Back Window Glass	501-11-91
SPECIFICATIONS	501-11-93

Official Licensed Product
Ford Motor Company

DESCRIPTION AND OPERATION

Glass — Windshield

The glass system is comprised of the:

- windshield glass (03100)
- window regulator control switch (14529)
- front door window glass (21410)
- quarter window glass (29710)
- back window glass (42006)
- heated back window switch and light (18C621)

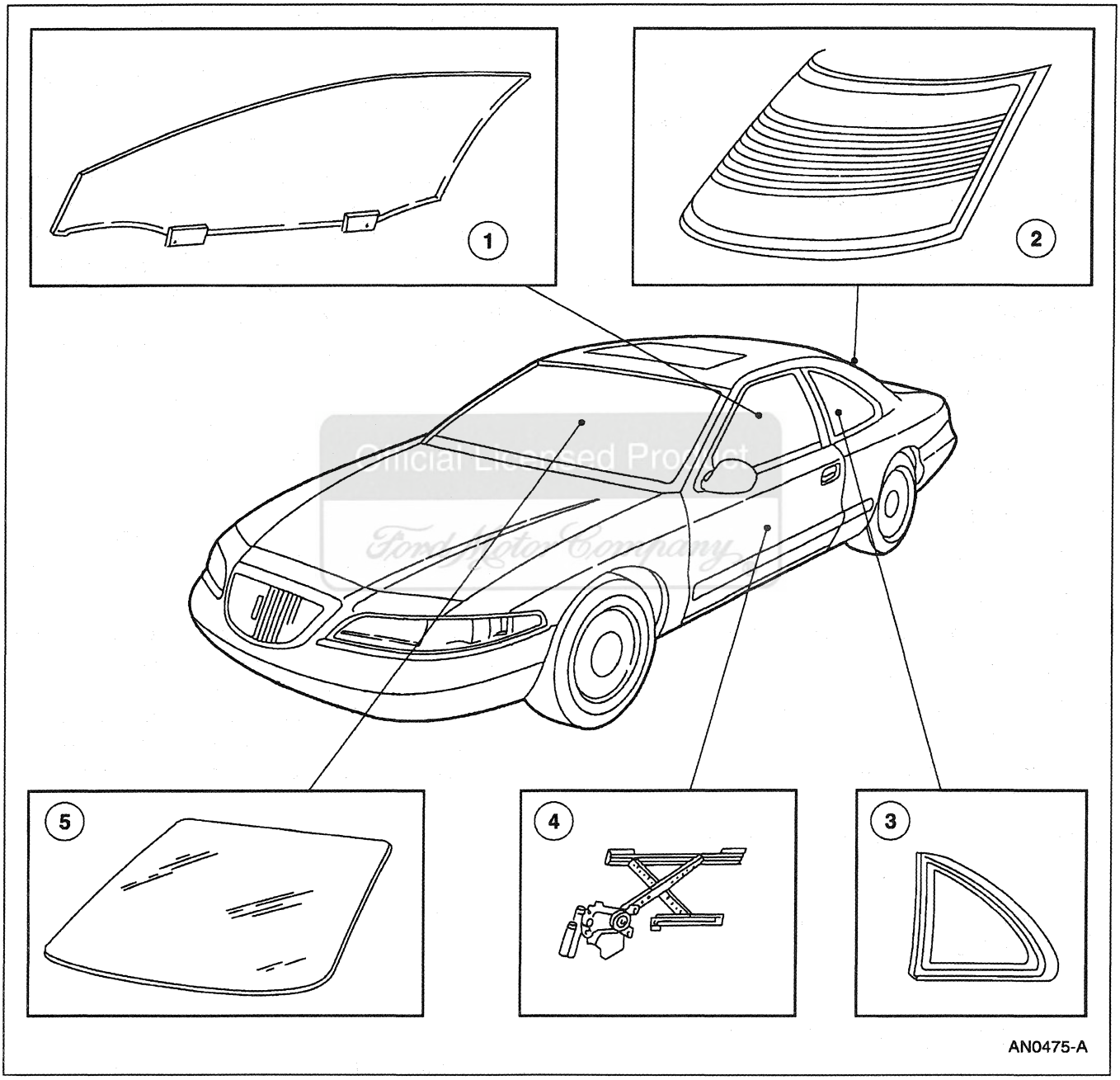

Item	Part Number	Description
1	23200	Front Door Window Regulator
2	42006	Back Window Glass

(Continued)

Item	Part Number	Description
3	29726	Quarter Window Opening Sight Shield

(Continued)

DESCRIPTION AND OPERATION (Continued)

Item	Part Number	Description
4	23208	Front Door Power Window Regulator Minus Motor
5	03100	Windshield Glass

The windshield glass is:

- a standard safety glass, a plastic laminate sandwiched between two sheets of glass.
- bonded to the pinch weld with urethane sealant.

Glass—Door

The front door window glass is:

- standard safety glass.
- mounted along the bottom edge to a slider bracket by snap-in nylon inserts.

Glass—Rear Quarter

The quarter window glass is:

- standard safety glass.
- bolted to the opening flange.

Glass—Back Window

The back window glass :

- is tempered glass.
- is bonded to the opening flange by urethane sealant.
- has integral mouldings.
- has rear defog grid lines bonded in two layers to the inner surface.
- has a separate FM antenna on-glass tracing above the defroster grid.

Switch—Window Regulator Control

The window regulator control switches :

- control the actuation of the front door window regulator (23200).
- are three-position rocker switches that default to the off position.
- raise the window when rocked forward and lowers the window when rocked toward the rear.
- are located on the door arm rests.
- on the drivers side control both front windows. The drivers side window regulator control switch is equipped with a one-touch down feature that fully lowers the drivers front door window glass when depressed once. This feature can be over-ridden by depressing the window regulator control switch again or depressing the drivers window regulator control switch for longer than one-half second.

Switch—Heated Back Window

The heated back window switch and light is:

- located on the instrument panel (04320).
- part of the rear window defroster system.
- a push-button spring loaded to NEUTRAL position design.
- normally open and closes when pushed; this supplies power to the side view mirrors, the defroster grid and a timer. The system shuts off when the switch is pushed to the off position, the ignition is turned off or the timer expires. The status of the system is indicated with an indicator lamp housed in the switch.

Official Licensed Product
Ford Motor Company

DIAGNOSIS AND TESTING

Glass, Frames and Mechanisms

Refer to Electrical and Vacuum Troubleshooting Manual, Cell 100, Power Windows for schematic and connector information.

Refer to Electrical and Vacuum Troubleshooting Manual, Cell 56, Rear Window Defrost/Heated Mirrors for schematic and connector information.

DIAGNOSIS AND TESTING (Continued)

Refer to Electrical and Vacuum Troubleshooting Manual, Cell 57, Driver's Door Module for schematic and connector information.

Refer to Electrical and Vacuum Troubleshooting Manual, Cell 58, Lighting Control Module for schematic and connector information.

Refer to Electrical and Vacuum Troubleshooting Manual, Cell 88, Delayed Accessory Power for schematic and connector information.

Special Tool(s)

ST1137-A	73 Digital Multimeter 105-R0051 or equivalent
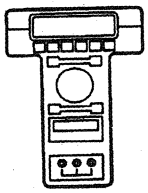 ST1217-A	New Generation Star (NGS) Tester 418-F048 (007-00500) or equivalent

Inspection and Verification

1. Verify the customer's concern by operating the power windows/back window defroster to duplicate the concern.
2. Inspect to determine if one of the following mechanical or electrical concerns apply:

Visual Inspection Chart

Mechanical	Electrical
• Front door window regulator damaged. • Front door glass hinge side run damaged. • Front door window glass out of front door glass hinge side run . • Front door window glass broken.	• Circuits open/shorted. • Loose, corroded connectors. • Damaged window regulator control switch . • Damaged window regulator electric drive . • Damaged fuses power distribution box Fuse 28 (30A), Fuse 24 (40A)/fuse junction panel Fuse 41 (10A), Fuse 28 (10A).

3. If the inspection reveals obvious concerns that can be readily identified, service as required.
4. If the concern remains after the inspection, connect the Rotunda New Generation Star (NGS) Tester to the data link connector (DLC) located beneath the instrument panel and select the vehicle to be tested from the NGS menu. If the NGS does not communicate with the vehicle:
   - check that the program card is properly installed.
   - check the connections to the vehicle.
   - check the ignition switch position.

   If the NGS still does not communicate with the vehicle, refer to the New Generation Star Tester manual.
5. Perform the DATA LINK DIAGNOSTIC TEST using the NGS. If the NGS responds with:
   - CKT 914 or CKT 915 = ALL MODULES NO RESPONSE/NOT EQUIPPED, go to Communication System Diagnostics in Section 418-00 to diagnose the network concern.
   - NO RESP0NSE/NOT EQUIPPED for the driver door module (DDM), go to Pinpoint Test A.
   - NO RESPONSE/NOT EQUIPPED for the steering column/ignition/lighting control module (SCIL), go to Pinpoint Test B.
   - SYSTEM PASSED for the DDM, retrieve and record the continuous diagnostic trouble codes (DTCs), erase the continuous DTCs, then execute the Self Test Diagnostics for the DDM.
   - SYSTEM PASSED for the SCIL, retrieve and record the continuous diagnostic trouble codes (DTCs), erase the continuous DTCs, then execute the Self Test Diagnostics for the SCIL.
6. If the DTCs retrieved are related to the concern, go to the Driver Door Module Diagnostic Trouble Code (DTC) Index or the Steering Column/Ignition/Lighting Control Module (SCIL) Diagnostic Trouble Code (DTC) Index to continue diagnostics.
7. If no DTCs related to the concern are retrieved, go to the Symptom Chart to continue diagnostics.

Official Licensed Product
Ford Motor Company

DIAGNOSIS AND TESTING (Continued)

DRIVER DOOR MODULE (DDM) DIAGNOSTIC TROUBLE CODE (DTC) INDEX

DTC	Description	DTC caused by	Action To Take
B1322	Door Ajar LF Circuit Short to Ground	DDM	GO to Section 417-02.
B1342	ECU is Defective	DDM	GO to Section 501-09.
B1396	Power Door Lock Circuit Short to Battery	DDM	GO to Section 501-14B.
B1525	Keyless Entry Circuit Short to Battery	DDM	GO to Section 501-14B.
B1529	Memory Set Switch Circuit Short to Battery	DDM	GO to Section 501-09.
B1539	Mirror Driver Switch Assembly Circuit Failure	DDM	GO to Section 501-09.
B1549	Power Window Master Circuit Short to Battery	DDM	GO to DTC B1549.
B1554	Luggage Compartment Door Release Circuit Short to Ground	DDM	GO to Section 501-14A.
B1676	Battery Voltage Out of Range	DDM	GO to Section 501-14B.
U1041	SCP Invalid or Missing Data for Vehicle Speed	ABS	GO to Section 206-09, Inspection and Verification to continue diagnosis.
U1059	SCP Invalid or Missing Data for Transmission/Transaxle/PRNDL	PCM	REFER to Powertrain Control/Emissions Diagnosis Manual [1].
U1117	SCP Invalid or Missing Data for Electrical Energy Management	SCIL	GO to Inspection and Verification to retrieve and service Steering Column/Ignition/Lighting Control Module DTCs.
U1135	SCP Invalid or Missing Data for Ignition Switch/Starter	SCIL	GO to Section 501-12, Inspection and Verification to continue diagnosis.
U1196	SCP Invalid or Missing Data for Door Locks	SCIL	GO to Section 419-01A, Inspection and Verification to continue diagnosis.
U1199	SCP Invalid or Missing Data for External Access (Doors)	SCIL	GO to Section 417-02, Inspection and Verification to continue diagnosis.

Official Licensed Product Ford Motor Company

DRIVER DOOR MODULE (DDM) PARAMETER IDENTIFICATION (PID) INDEX

Display	Description	Content
CCNT__DD	Number of Continuous DTCs on DDM	one count per bit
KEYCODE	Keyless Entry Factory Code	5 digit no. encoded, INVLD
D__DR__DD	Driver Door Ajar Switch	AJAR CLOSED
DLIDRLS	Deck Lid Release Switch	ON OFF
D__PW__SW	Driver Power Window Switch	UP DOWN OFF SHORT
OTD__SW	One Touch Down Switch	OFF DOWN
DR__LOCK	Door Lock Output State	SHORT LOCK UNLOCK OFF
D__WINDO	Driver Window	DOWN not DWN
MEM__OFF	Memory Off Switch	ACTIVE not ACT
MEM2__SW	Memory Recall Switch No. 2	OFF ON
MEM1__SW	Memory Recall Switch No. 1	OFF ON
MIR__SEL	Power Mirror Select Switch	PSSNGR DRIVER
MIRV__SW	Power Mirror Position Switch - Vertical	SHORTDOWN UP OFF
MIRH__SW	Power Mirror Position Switch - Horizontal	SHORT RIGHT LEFT OFF
KEY__PAD	Keyless Entry Switch	1/2, 3/4, 5/6, 7/8, 9/0

DIAGNOSIS AND TESTING (Continued)

DRIVER DOOR MODULE (DDM) ACTIVE COMMAND INDEX

Active Command	Display	Action
PID Latch	PID LATCH	ON OFF
Memory Seat LED Control	LED STATE	ON OFF
Keypad Backlighting	LIGHT	ON OFF

(Continued)

DRIVER DOOR MODULE (DDM) ACTIVE COMMAND INDEX

Active Command	Display	Action
Front Window Control	DD DOWN	ON OFF
Door Lock Control	LOCK	ON OFF
	UNLOCK	ON OFF
	DD UNLOCK	ON OFF

STEERING COLUMN/IGNITION/LIGHTING CONTROL (SCIL) MODULE DIAGNOSTIC TROUBLE CODE (DTC) INDEX

DTC	Description	DTC caused by	Action To Take
C1446	Brake Switch Circuit Failure	SCIL	GO to Section 206-05.
B1246	Panel Dim Potentiometer Switch Circuit Failure	SCIL	GO to Section 417-02.
B1312	Lamp Headlamp Input Circuit Short to Battery	SCIL	GO to Section 417-01.
B1334	Luggage Compartment Door Ajar Circuit Short to Ground	SCIL	GO to Section 417-02.
B1342	ECU Defective	SCIL	GO to Section 417-01.
B1353	Ignition Key-In Circuit Open	SCIL	GO to Section 501-12.
B1360	Ignition RUN/ACC Circuit Open	SCIL	GO to Section 501-12.
B1364	Ignition Start Circuit Open	SCIL	GO to Section 501-12.
B1446	Wiper Park Sense Circuit Failure	SCIL	GO to Section 417-01.
B1509	Flash-to-Pass Switch Circuit Short To Battery	SCIL	GO to Section 417-01.
B1522	Hood Switch Circuit Short to Ground	SCIL	GO to Section 419-01A.
B1562	Door Lock Cylinder Circuit Short to Ground	SCIL	GO to Section 419-01A.
B1566	Door Ajar Circuit Short to Ground	SCIL	GO to Section 417-02.
B1600	PATS Ignition Key Transponder Signal is Not Received	SCIL	GO to Section 419-01B.
B1601	PATS Received Incorrect Key Code from Ignition Key Transponder	SCIL	GO to Section 419-01B.
B1676	Battery Voltage Out of Range	SCIL	GO to Section 417-01.
B1682	PATS is Disabled (Check Link Between PATS and Transponder)	SCIL	GO to Section 419-01B.
B1687	Lamp Dome Input Circuit Short to Battery	SCIL	GO to Section 417-02.
B1689	Autolamp Delay Circuit Failure	SCIL	GO to Section 417-01.
B1796	Lamp Headlamp Low Beam Circuit Short to Battery	SCIL	GO to Section 417-01.
B1875	Turn Signal/Hazard Switch Signal Circuit Failure	SCIL	GO to Section 417-01.
B1980	Bulb Outage Condition Detected	SCIL	GO to Section 417-01.
B2328	Steering Column Reach Feedback Potentiometer Circuit Failure	SCIL	GO to Section 211-05.
B2332	Steering Column Tilt Feedback Potentiometer Circuit Failure	SCIL	GO to Section 211-05.

(Continued)

Ford Motor Company Original Licensed Product

DIAGNOSIS AND TESTING (Continued)

STEERING COLUMN/IGNITION/LIGHTING CONTROL (SCIL) MODULE DIAGNOSTIC TROUBLE CODE (DTC) INDEX

DTC	Description	DTC caused by	Action To Take
B2351	Steering Column Switch Signal Circuit Failure	SCIL	GO to Section 211-05.
U1027	SCP Invalid or Missing Data for Engine RPM	PCM	REFER to the Powertrain Control/Emissions Diagnosis Manual [2].
U1041	SCP Invalid or Missing Data for Vehicle Speed	ABS	GO to Section 206-09, Inspection and Verification to continue diagnosis.
U1057	SCP Invalid or Missing Data for Vehicle Configuration	SCIL	GO to Section 417-01, Inspection and Verification to continue diagnosis.
U1059	SCP Invalid or Missing Data for Transmission/Transaxle/PRNDL	PCM	REFER to the Powertrain Control/Emissions Diagnosis Manual [2].
U1123	SCP Invalid or Missing Data for Odometer	ABS	GO to Section 206-09, Inspection and Verification to continue diagnosis.
U1147	SCP Invalid or Missing Data for Vehicle Security	PCM	PERFORM J1850 Communication Network diagnostics. GO to Communication Network Diagnostics in Section 418-00.
U1180	SCP Invalid or Missing Data for Personalization (Memory) Features	DDM	GO to Section 501-09, Inspection and Verification to continue diagnosis.
U1181	SCP Invalid or Missing Data for Personalization (Memory) Features	DDM	GO to Section 501-09, Inspection and Verification to continue diagnosis.
U1197	SCP Invalid or Missing Data for Door Locks	DDM	GO to Section 501-14B, Inspection and Verification to continue diagnosis.
U1198	SCP Invalid or Missing Data for External Access (Doors)	DDM	GO to Section 501-14B, Inspection and Verification to continue diagnosis.
U1199	SCP Invalid or Missing Data for External Access (Doors)	DDM	GO to Section 417-02, Inspection and Verification to continue diagnosis.
U1211	SCP Invalid or Missing Data for Restraints	DSM	GO to Section 413-08B, Inspection and Verification to continue diagnosis.
U1222	SCP Invalid or Missing Data for Interior Lamps	DDM	GO to Section 501-14B, Inspection and Verification to continue diagnosis.

STEERING COLUMN/IGNITION/LIGHTING CONTROL (SCIL) MODULE PARAMETER IDENTIFICATION (PID) INDEX

Display	Description	Content
CCNTSCL	Number of Continuous DTCs on SCIL	one count per bit
BOO__SCI	Brake Switch Input	ON OFF
PRK__BRK	Parking Brake Switch Input	ON OFF
TILT	Steering Column Tilt Switch	SHORT UP DOWN OFF
TELESCP	Steering Column Telescope Switch	SHORT IN OUT OFF
TILTPOS	Tilt Position Sensor	SENSED notSEN
TELEPOS	Telescope Position Sensor	SENSED notSEN
TURN__SW	Left and Right Turn Signal Switch	OFF LEFT RIGHT SHORT
LBEAMSW	Low Beam Switch	ON OFF
HBEAMSW	High Beam Switch	ON OFF
PARK__SW	Parking Sw	ON OFF
LIGHTSN	Ambient Light	DAY NIGHT

(Continued)

DIAGNOSIS AND TESTING (Continued)

STEERING COLUMN/IGNITION/LIGHTING CONTROL (SCIL) MODULE PARAMETER IDENTIFICATION (PID) INDEX

Display	Description	Content
FLASH	Flash to Pass Switch	ON OFF
FTURN__L	Left and Right Front Turn Lamp	R__OPEN, L__OPEN, L/R__OPEN OK
RTURN__L	Left and Right Rear Turn Lamp	R__OPEN, L__OPEN, L/R__OPEN OK
TAILLMP	Left and Right Tail Lamp	OPEN OK
LOWBEAM	Low Beam Lamp	R__OPEN, L__OPEN, L/R__OPEN OK
AUTOLMP	Autolamp Switch	ON OFF
ALP__IMP	Autolamp Analog Input	0-100%
DOMESW	Dome Lamp Switch	ACTIVE notACT
PANLDIM	Panel Dim Intensity Switch	0-100%
HOOD__SW	Hood Ajar Switch	AJAR CLOSED
DECKLID	Decklid Ajar Switch	AJAR CLOSED
P__DR__SW	Passenger Door Ajar Switch	AJAR CLOSED
IGN__KEY	Ignition Key In/Out	IN OUT
IGN__SCI	Ignition Switch	START RUN OFF ACCSSY
WPPRKSW	Windshield Wiper Park Sense	notPRK PARKED
NUMKEYS	Number of Ignition Key Codes Supported	BCD (valid range 0-16)
DRLKCYL	Door Lock Cylinder	ON OFF
ENABLE	PATS System Status	ON, OFF
FAILSAF	PATS System Status	ON, OFF

STEERING COLUMN/IGNITION/LIGHTING (SCIL) CONTROL MODULE ACTIVE COMMAND INDEX

Active Command	Display	Action
PID Latch	PID LATCH	ON OFF
One Touch Window Dwn and Accy Delay	ACCY RLY	ON OFF
Warning Lamps and Chime	CHIME	ON OFF
	ANTI-THEFT	ON OFF
	AUTOLMP	ON OFF
	HIGH BEAM	ON OFF
Interior Courtesy Lamps	MIRROR LAMP	ON OFF
Decklid Release	RELEASE	ON OFF
Turn Signal and Marker Lamps	LF TURN	ON OFF
	RF TURN	ON OFF
	LR TURN	ON OFF

(Continued)

STEERING COLUMN/IGNITION/LIGHTING (SCIL) CONTROL MODULE ACTIVE COMMAND INDEX

Active Command	Display	Action
	RR TURN	ON OFF
	PARKLAMPS	ON OFF
Headlamp Control	LEFT LOW	ON OFF
	RIGHT LOW	ON OFF
	HIGH BEAM	ON OFF
	DRUN LAMP	ON OFF
	LF CORNER	ON OFF
	RF CORNER	ON OFF
Horn Control	HORN	ON OFF
Backlighting Intensity	INTENSITY	0%-100%
Courtesy Lamp Intensity	INTENSITY	0%-100%
Door Ajar Signal	DOOR AJAR	ON OFF

(Continued)

DIAGNOSIS AND TESTING (Continued)

STEERING COLUMN/IGNITION/LIGHTING (SCIL) CONTROL MODULE ACTIVE COMMAND INDEX

Active Command	Display	Action
Transmit Signal Command	TRANSMIT	ON OFF
Brake System	BRK/SHIFT PARK BRK	ON OFF ON OFF
Steering Column Control	TILT UP TILT DOWN TELSCP IN	ONE SECOND TIME OUT ONE SECOND TIME OUT ONE SECOND TIME OUT

(Continued)

STEERING COLUMN/IGNITION/LIGHTING (SCIL) CONTROL MODULE ACTIVE COMMAND INDEX

Active Command	Display	Action
	TELSCPOUT	ONE SECOND TIME OUT
Keycode Erase Time Set	MINUTES	8-63 MINUTES

Symptom Chart

Refer to the Electrical and Vacuum Troubleshooting Manual for the connector numbers cited in the pinpoint tests.

SYMPTOM CHART

Condition	Possible Source	Action
• No Communication With The Driver Door Module	• Driver door module. • Circuitry.	• GO to Pinpoint Test A.
• No Communication With The Steering Column/Ignition/Lighting Control Module	• Steering column/ignition/lighting control module. • Circuitry.	• GO to Pinpoint Test B.
• All Power Windows Are Inoperative	• Delay accessory relay. • Window regulator control switch inoperative. • Circuits open or shorted. • Window regulator electric drive inoperative.	• GO to Pinpoint Test C.
• A Single Power Window Is Inoperative	• Circuitry. • Window regulator electric drive . • Window regulator control switch . • Driver door module.	• GO to Pinpoint Test D.
• The One Touch Down Feature Is Inoperative	• LH window regulator control switch . • Driver door module. • Circuitry.	• GO to Pinpoint Test E.
• The Power Window Switch Will Not Illuminate	• Circuit. • Window regulator control switch .	• GO to Pinpoint Test F.
• The Back Window Will Not Defrost	• Circuitry. • Heated back window switch and light .	• GO to Pinpoint Test G.
• The Back Window Defroster Will Not Shut Off Automatically	• Circuit. • Heated back window switch and light .	• GO to Pinpoint Test H.
• The Delayed Accessory Does Not Turn Off	• Delayed accessory relay No. 1. • Delayed accessory relay No. 2. • Steering column/ignition/lighting control module. • Circuitry.	• GO to Pinpoint Test J.

Ford Motor Company Licensed Product

DIAGNOSIS AND TESTING (Continued)

SYMPTOM CHART (Continued)

Condition	Possible Source	Action
• The Delayed Accessory Does Not Operate Properly	• Delayed accessory relay No. 1. • Delayed accessory relay No. 2. • Steering column/ignition/lighting control module. • Circuitry.	• GO to Pinpoint Test K.

Pinpoint Tests

DTC B1549: POWER WINDOW MASTER CIRCUIT SHORT TO BATTERY

TEST CONDITIONS	TEST DETAILS/RESULTS/ACTIONS
B1549-1 CHECK DTC	
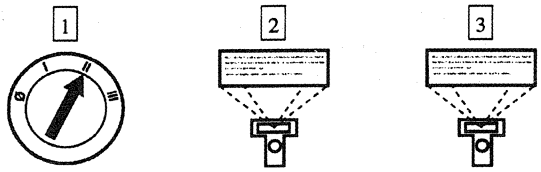 Clear DDM DTCs DDM Self-Test	• Is DTC B1549 retrieved? → **Yes** GO to **B1549-3.** → **No** GO to **B1549-2.**

Official Licensed Product
Ford Motor Company

(Continued)

DIAGNOSIS AND TESTING (Continued)

DTC B1549: POWER WINDOW MASTER CIRCUIT SHORT TO BATTERY (Continued)

TEST CONDITIONS	TEST DETAILS/RESULTS/ACTIONS
B1549-2 CHECK FOR STICKING SWITCH	
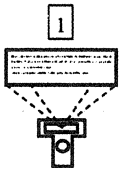 DDM PID D__PW__SW	2 Press the LH window regulator control switch to the UP position then to the DOWN position while monitoring PID D__PW__SW. • Does the PID D__PW__SW change from OFF to UP to OFF then from OFF to DOWN to OFF as the window regulator control switch is pressed UP and DOWN? → **Yes** The system is operating properly. If the switch was held to UP or DOWN for two minutes or more, DTC B1549 would store in memory. → **No** REPLACE the LH window regulator control switch . REPEAT the DDM self-test.
B1549-3 CHECK PID LFPW__SW	
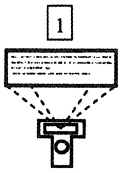 DDM PID D__PW__SW	• Does the PID D__PW__SW read OFF? → **Yes** GO to **B1549-7.** → **No** GO to **B1549-4.**

(Continued)

Official Licensed Product
Ford Motor Company

DIAGNOSIS AND TESTING (Continued)

DTC B1549: POWER WINDOW MASTER CIRCUIT SHORT TO BATTERY (Continued)

TEST CONDITIONS	TEST DETAILS/RESULTS/ACTIONS
B1549-4 CHECK THE LH WINDOW REGULATOR CONTROL SWITCH FOR A SHORT	
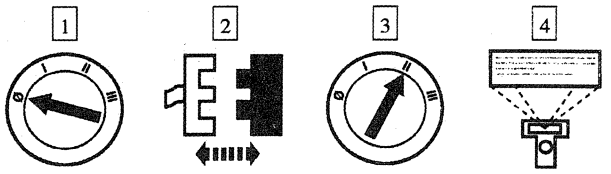 LH Window Regulator Control Switch Connector C521 DDM PID D__PW__SW	• Does the PID D__PW__SW read OFF? → **Yes** REPLACE the LH window regulator control switch . REPEAT the DDM self-test. → **No** GO to **B1549-5.**
B1549-5 CHECK CIRCUIT 226 (W/BK) FOR A SHORT TO BATTERY	
 DDM Connector C457 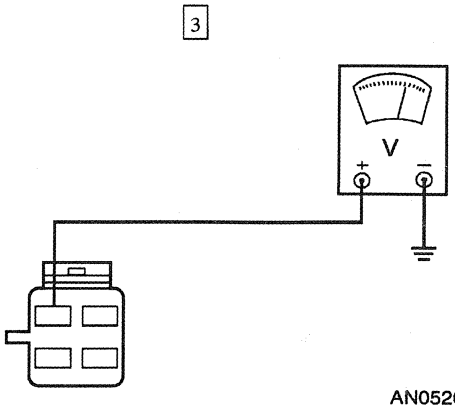 AN0526-B	3 Measure the voltage at DDM connector Pin C457-1, Circuit 226 (W/BK). • Is the voltage reading B+? → **Yes** REPAIR Circuit 226 (W/BK) for a short to B+. REPEAT the DDM self-test. → **No** GO to **B1549-6.**

Original Licensed Product Ford Motor Company

(Continued)

DIAGNOSIS AND TESTING (Continued)

DTC B1549: POWER WINDOW MASTER CIRCUIT SHORT TO BATTERY (Continued)

TEST CONDITIONS	TEST DETAILS/RESULTS/ACTIONS
B1549-6 CHECK CIRCUIT 227 (Y) FOR A SHORT TO B+	
1 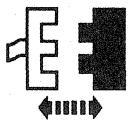 DDM Connector C456 2 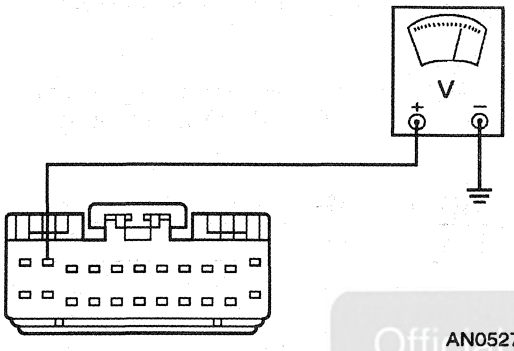 AN0527-B	2 Measure the voltage at DDM connector Pin C456-2, Circuit 227 (Y). • Is the voltage reading B+? → **Yes** REPAIR Circuit 227 (Y) for a short to B+. REPEAT the DDM self-test. → **No** REPLACE the driver door module. REPEAT the DDM self-test.
B1549-7 CHECK CIRCUIT 903 (R) FOR A SHORT TO B+	
1 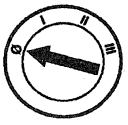 2 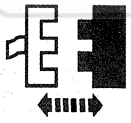 DDM Connector C456 3 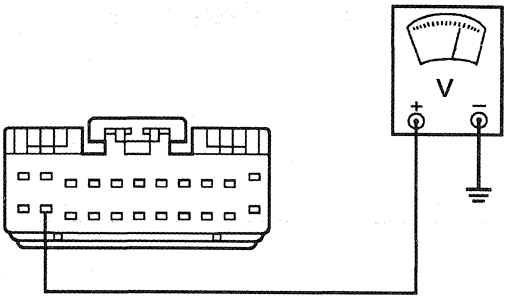 AN0528-B	3 Measure the voltage at DDM connector Pin C456-13, Circuit 903 (R). • Is the voltage reading B+? → **Yes** GO to **B1549-8.** → **No** REPLACE the driver door module. REPEAT the DDM self-test.

Official Licensed Product
Ford Motor Company

(Continued)

DIAGNOSIS AND TESTING (Continued)

DTC B1549: POWER WINDOW MASTER CIRCUIT SHORT TO BATTERY (Continued)

TEST CONDITIONS	TEST DETAILS/RESULTS/ACTIONS
B1549-8 CHECK THE LH WINDOW REGULATOR CONTROL SWITCH FOR A SHORT TO B+	
1 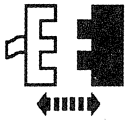 LH Window Regulator Control Switch Connector C521 2 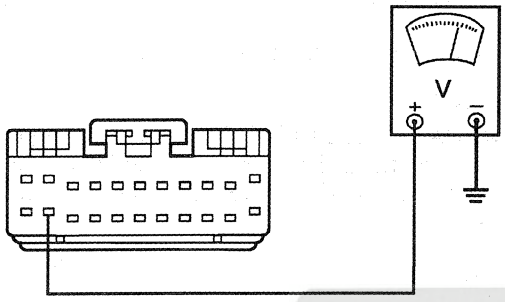 AN0528-B	2 Measure the voltage at DDM connector Pin C521-13, Circuit 903 (R). • Is the voltage reading B+? → **Yes** REPAIR Circuit 903 (R) for a short to B+. REPEAT the DDM self-test. → **No** REPLACE the LH window regulator control switch . REPEAT the DDM self-test.

Official Licensed Product Ford Motor Company

PINPOINT TEST A: NO COMMUNICATION WITH THE DRIVER DOOR MODULE

TEST CONDITIONS	TEST DETAILS/RESULTS/ACTIONS
A1 CHECK THE POWER SUPPLY TO DRIVER DOOR MODULE	
1 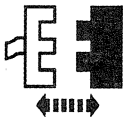 DDM Connector C457 2 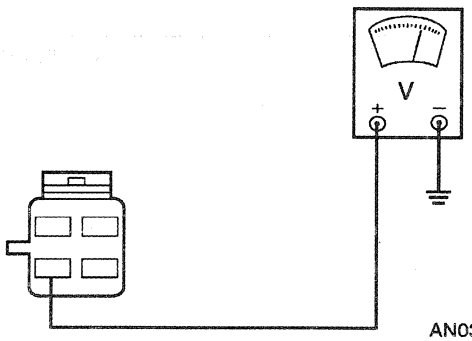 AN0359-B	2 Measure the voltage at DDM connector Pin C457-3, Circuit 1077 (DG/P). • Is the voltage reading B+? → **Yes** GO to **A16**. → **No** GO to **A2**.

(Continued)

DIAGNOSIS AND TESTING (Continued)

PINPOINT TEST A: NO COMMUNICATION WITH THE DRIVER DOOR MODULE (Continued)

TEST CONDITIONS	TEST DETAILS/RESULTS/ACTIONS
A2 CHECK CIRCUIT 1077 (DG/P) FOR AN OPEN	
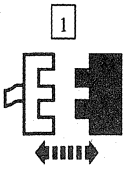 DDM Connector C455 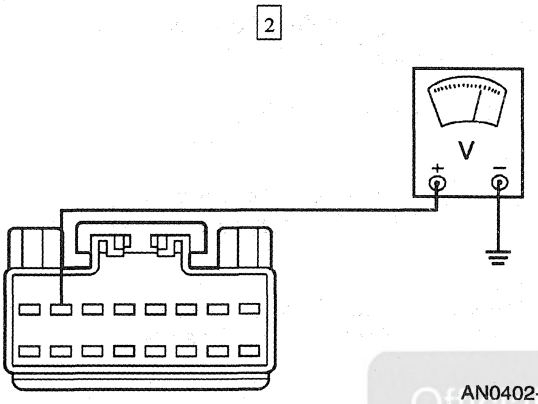 AN0402-B	2 Measure the voltage at DDM connector Pin C455-2, Circuit 1077 (DG/P). • Is the voltage reading B+? → **Yes** REPAIR Circuit 1077 (DG/P) for an open between the DDM connector C457 and the splice. REPEAT the Data Link Diagnostic Test. → **No** GO to **A3**.
A3 CHECK FUSE JUNCTION PANEL FUSE 41 (10A)	
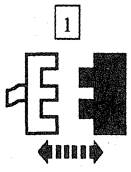 Fuse Junction Panel Fuse 41 (10A) 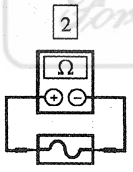 Fuse Junction Panel Fuse 41 (10A)	• Is Fuse 41 (10A) OK? → **Yes** REPAIR Circuit 1077 (DG/P) for an open. REPEAT the Data Link Diagnostic Test. → **No** GO to **A4**.

(Continued)

Official Licensed Product Ford Motor Company

DIAGNOSIS AND TESTING (Continued)

PINPOINT TEST A: NO COMMUNICATION WITH THE DRIVER DOOR MODULE (Continued)

TEST CONDITIONS	TEST DETAILS/RESULTS/ACTIONS
A4 CHECK FOR A SYSTEM SHORT	
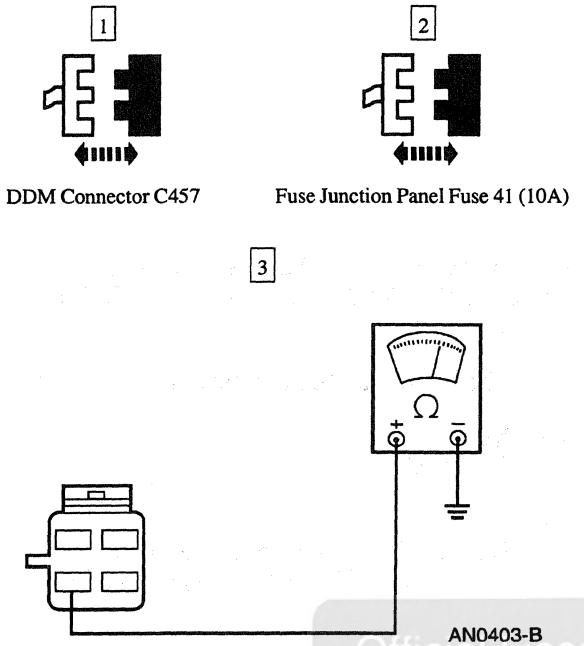	3 Measure the resistance between the DDM connector Pin C457-3, Circuit 1077 (DG/P) and ground. • Is the resistance 10 K ohms or less? → **Yes** GO to **A5**. → **No** GO to **A10**.
A5 CHECK THE LH DOOR LOCK SWITCH FOR A SHORT TO GROUND	
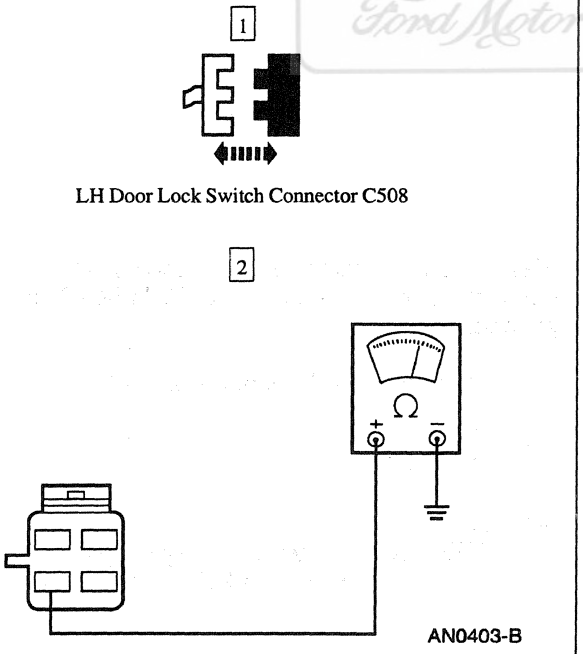	2 Measure the resistance between the DDM connector Pin C457-3, Circuit 1077 (DG/P) and ground. • Is the resistance 10 K ohms or less? → **Yes** GO to **A6**. → **No** REPLACE the LH door lock switch. REPEAT the Data Link Diagnostic Test.

Official Licensed Product
Ford Motor Company

(Continued)

DIAGNOSIS AND TESTING (Continued)

PINPOINT TEST A: NO COMMUNICATION WITH THE DRIVER DOOR MODULE (Continued)

TEST CONDITIONS	TEST DETAILS/RESULTS/ACTIONS
A6 CHECK THE RH DOOR LOCK SWITCH FOR A SHORT TO GROUND	
1 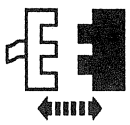 RH Door Lock Switch Connector C608 2 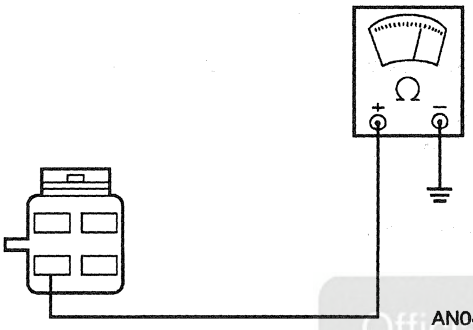 AN0403-B	2 Measure the resistance between the DDM connector Pin C457-3, Circuit 1077 (DG/P) and ground. • Is the resistance 10 K ohms or less? → **Yes** GO to **A7**. → **No** REPLACE the RH door lock switch. REPEAT the Data Link Diagnostic Test.
A7 CHECK THE KEYLESS ENTRY KEYPAD FOR A SHORT TO GROUND	
1 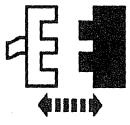 Keyless Entry Keypad Connector C510 2 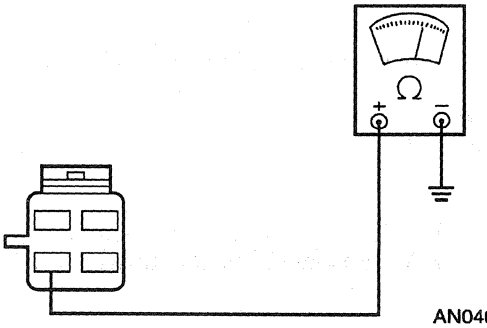 AN0403-B	2 Measure the resistance between the DDM connector Pin C457-3, Circuit 1077 (DG/P) and ground. • Is the resistance 10 K ohms or less? → **Yes** GO to **A8**. → **No** REPLACE the keyless entry keypad . REPEAT the Data Link Diagnostic Test.

Official Licensed Product
Ford Motor Company

(Continued)

DIAGNOSIS AND TESTING (Continued)

PINPOINT TEST A: NO COMMUNICATION WITH THE DRIVER DOOR MODULE (Continued)

TEST CONDITIONS	TEST DETAILS/RESULTS/ACTIONS
A8 CHECK THE MEMORY OFF/RECALL SWITCH FOR A SHORT TO GROUND	
1 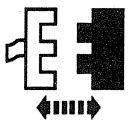 Memory Off/Recall Switch Connector C515 2 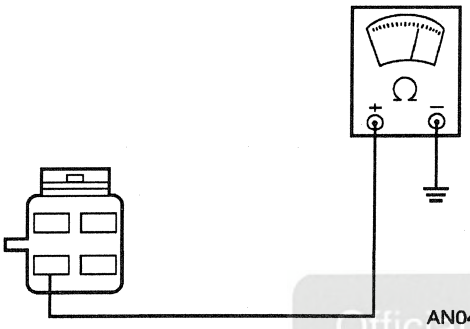 AN0403-B	2 Measure the resistance between the DDM connector Pin C457-3, Circuit 1077 (DG/P) and ground. • Is the resistance 10 K ohms or less? → **Yes** GO to **A9**. → **No** REPLACE the memory off/recall switch. REPEAT the Data Link Diagnostic Test.
A9 CHECK THE OUTSIDE REAR VIEW MIRROR CONTROL SWITCH FOR A SHORT TO GROUND	
1 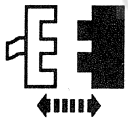 Outside Rear View Mirror Control Switch Connector C500 2 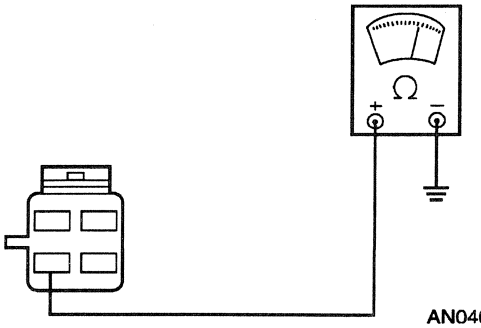 AN0403-B	2 Measure the resistance between the DDM connector Pin C457-3, Circuit 1077 (DG/P) and ground. • Is the resistance 10 K ohms or less? → **Yes** REPAIR Circuit 1077 (DG/P) for a short to ground. REPEAT the Data Link Diagnostic Test. → **No** REPLACE the outside rear view mirror control . REPEAT the Data Link Diagnostic Test.

Official Licensed Product
Ford Motor Company

(Continued)

DIAGNOSIS AND TESTING (Continued)

PINPOINT TEST A: NO COMMUNICATION WITH THE DRIVER DOOR MODULE (Continued)

TEST CONDITIONS	TEST DETAILS/RESULTS/ACTIONS
A10 CHECK CIRCUIT 117 (PK/BK)	
1 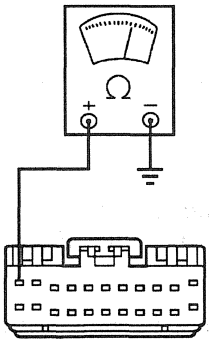 AK0943-B	1 Measure the resistance between the DDM connector Pin C456-1, Circuit 117 (PK/BK) and ground. • Is the resistance 10 K ohms or less? → **Yes** GO to **A11**. → **No** GO to **A13**.
A11 CHECK THE DRIVER DOOR LOCK ACTUATOR	
1 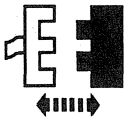 Driver Door Lock Actuator Connector C517 2 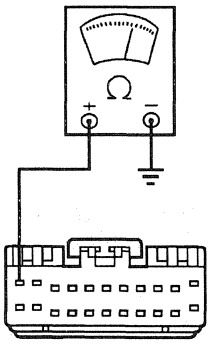 AK0943-B	2 Measure the resistance between the DDM connector Pin C456-1, Circuit 117 (PK/BK) and ground. • Is the resistance 10 K ohms or less? → **Yes** GO to **A12**. → **No** REPLACE the driver door lock actuator. REPEAT the Data Link Diagnostic Test.

Official Licensed Product
Ford Motor Company

(Continued)

DIAGNOSIS AND TESTING (Continued)

PINPOINT TEST A: NO COMMUNICATION WITH THE DRIVER DOOR MODULE (Continued)

TEST CONDITIONS	TEST DETAILS/RESULTS/ACTIONS
A12 CHECK THE PASSENGER DOOR LOCK ACTUATOR	
1 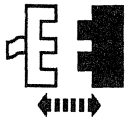 Passenger Door Lock Actuator Connector C610 2 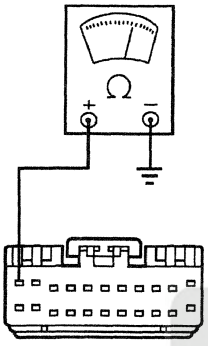 AK0943-B	2 Measure the resistance between the DDM connector Pin C456-1, Circuit 117 (PK/BK) and ground. • Is the resistance 10 K ohms or less? → **Yes** REPAIR Circuit 117 (PK/BK) for a short to ground. REPEAT the Data Link Diagnostic Test. → **No** REPLACE the passenger door lock actuator. REPEAT the Data Link Diagnostic Test.
A13 CHECK CIRCUIT 119 (PK/Y) AND CIRCUIT 120 (PK/LG) FOR A SHORT TO GROUND	
1 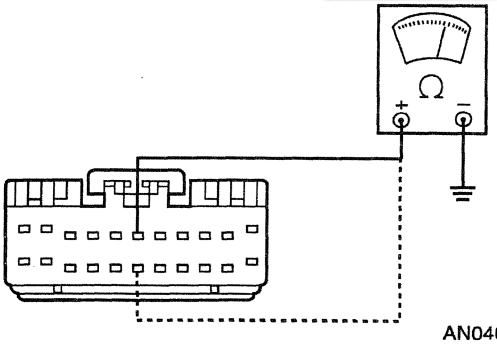 AN0404-B	1 Measure the resistance between the ground and the DDM connector Pin C456-6, Circuit 119 (PK/Y), then to Pin C456-17, Circuit 120 (PK/LG). • Is the resistance 10 K ohms or less on either Circuit? → **Yes** REPAIR Circuit 119 (PK/Y) or Circuit 120 (PK/LG) for a short to ground. REPEAT the Data Link Diagnostic Test. → **No** GO to **A14**.

(Continued)

Official Licensed Product Ford Motor Company

DIAGNOSIS AND TESTING (Continued)

PINPOINT TEST A: NO COMMUNICATION WITH THE DRIVER DOOR MODULE (Continued)

TEST CONDITIONS	TEST DETAILS/RESULTS/ACTIONS
A14 CHECK FOR A SYSTEM SHORT	
1 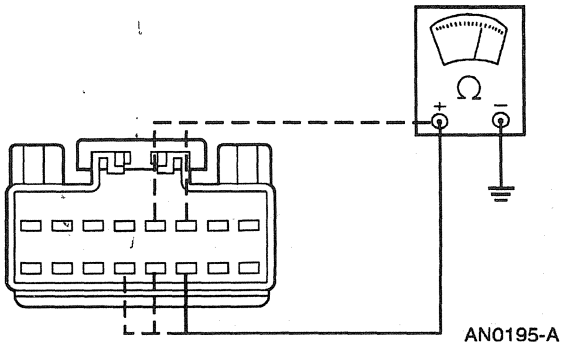 AN0195-A	1 Measure the resistance between ground and the following DDM connector Pins: — C455-14, Circuit 78 (LB/Y) — C455-6, Circuit 79 (LG/R) — C455-13, Circuit 121 (Y/BK) — C455-5, Circuit 122 (Y) — C455-12, Circuit 123 (R) • Is the resistance 10 K ohms or less on any circuit? → **Yes** REPAIR suspect circuit for a short to ground. REPEAT the Data Link Diagnostic Test. → **No** GO to **A15**.
A15 CHECK FOR A SYSTEM SHORT TO GROUND	
1 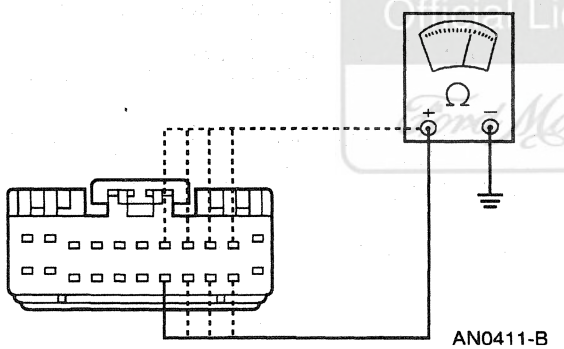 AN0411-B	1 Measure the resistance between ground and the following DDM connector Pins: — C456-18, Circuit 270 (BR/O) — C456-19, Circuit 267 (BR/LG) — C456-7, Circuit 268 (BK/O) — C456-20, Circuit 943 (P/O) — C456-21, Circuit 946 (P/LG) — C456-9, Circuit 942 (R/O) — C456-8, Circuit 944 (DG/O) — C456-10, Circuit 945 (Y/BK) • Is the resistance 10 K ohms or less on any circuit? → **Yes** REPAIR suspect circuit for a short to ground. REPEAT the Data Link Diagnostic Test. → **No** REPLACE fuse junction panel Fuse 41 (10A). REPLACE the driver door module. REPEAT the Data Link Diagnostic Test.

Official Licensed Ford Motor Company Part

(Continued)

DIAGNOSIS AND TESTING (Continued)

PINPOINT TEST A: NO COMMUNICATION WITH THE DRIVER DOOR MODULE (Continued)

TEST CONDITIONS	TEST DETAILS/RESULTS/ACTIONS
A16 CHECK THE POWER SUPPLY TO THE DRIVER DOOR MODULE CONNECTOR C455	
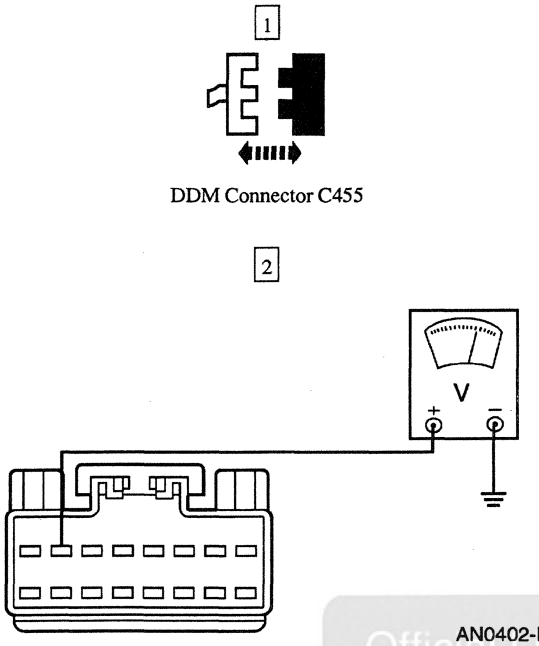	2 Measure the voltage at DDM connector Pin C455-2, Circuit 1077 (DG/P). • Is the voltage reading B+? → **Yes** GO to **A17.** → **No** REPAIR Circuit 1077 (DG/P) for an open between the DDM connector C455 and the splice. REPEAT the Data Link Diagnostic Test.
A17 CHECK CIRCUIT 57 (BK) FOR AN OPEN	
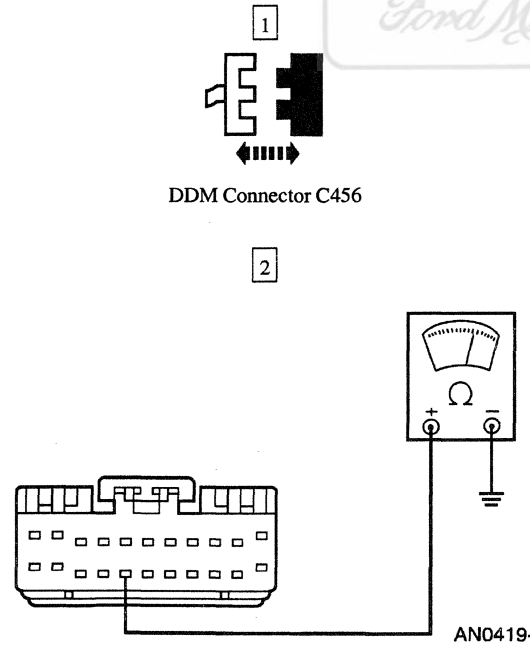	2 Measure the resistance between the DDM connector Pin C456-16, Circuit 57 (BK) and ground. • Is the resistance 5 ohms or less? → **Yes** GO to **A18.** → **No** REPAIR Circuit 57 (BK) for an open. REPEAT the Data Link Diagnostic Test.

Official Licensed Product
Ford Motor Company

(Continued)

DIAGNOSIS AND TESTING (Continued)

PINPOINT TEST A: NO COMMUNICATION WITH THE DRIVER DOOR MODULE (Continued)

TEST CONDITIONS	TEST DETAILS/RESULTS/ACTIONS
A18 CHECK CIRCUIT 875 (BK/LB) FOR AN OPEN	
1 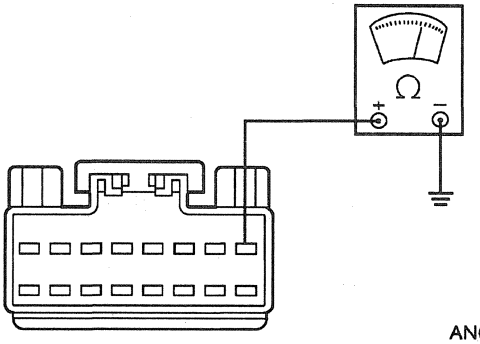 AN0420-B	1 Measure the resistance between the DDM connector Pin C455-8, Circuit 875 (BK/LB) and ground. • Is the resistance 5 ohms or less? → **Yes** GO to Section 418-00, Communication System Diagnostics, to diagnose network concern. → **No** REPAIR Circuit 875 (BK/LB) for an open. REPEAT the Data Link Diagnostic Test.

PINPOINT TEST B: NO COMMUNICATION WITH THE STEERING COLUMN/IGNITION/LIGHTING CONTROL MODULE

TEST CONDITIONS	TEST DETAILS/RESULTS/ACTIONS
B1 CHECK CIRCUIT 875 (BK/LB) FOR AN OPEN	
1 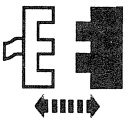 SCIL Connector C288 2 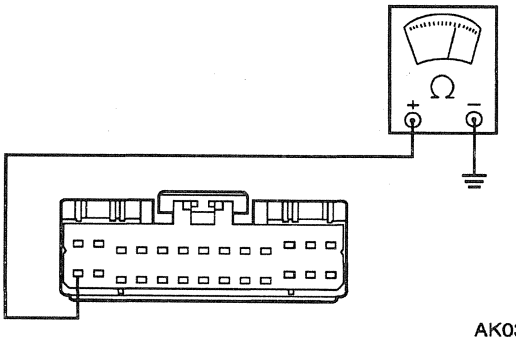 AK0313-B	2 Measure the resistance between the steering column/ignition/lighting control module connector Pin C288-14, Circuit 875 (BK/LB) and ground. • Is the resistance 5 ohms or less? → **Yes** GO to **B2**. → **No** REPAIR Circuit 875 (BK/LB) for an open. REPEAT the Data Link Diagnostic Test.

Official Licensed Product
Ford Motor Company

(Continued)

DIAGNOSIS AND TESTING (Continued)

PINPOINT TEST B: NO COMMUNICATION WITH THE STEERING COLUMN/IGNITION/LIGHTING CONTROL MODULE (Continued)

TEST CONDITIONS	TEST DETAILS/RESULTS/ACTIONS
B2 CHECK CIRCUIT 57 (BK) FOR AN OPEN	
1 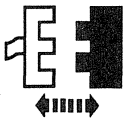 SCIL Connector C287 2 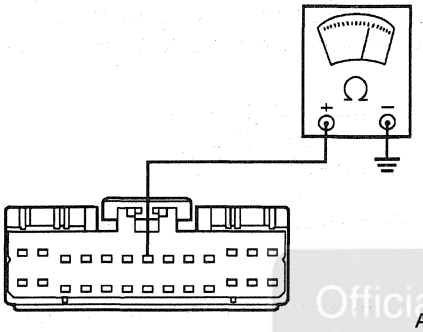 AK0314-B	2 Measure the resistance between the steering column/ignition/lighting control module connector Pin C287-7, Circuit 57 (BK) and ground. • Is the resistance 5 ohms or less? → **Yes** GO to **B3.** → **No** REPAIR Circuit 57 (BK) for an open. REPEAT the Data Link Diagnostic Test.
B3 CHECK FOR B+ SUPPLY ON THE STEERING COLUMN/IGNITION/LIGHTING CONTROL MODULE CONNECTOR C287	
1 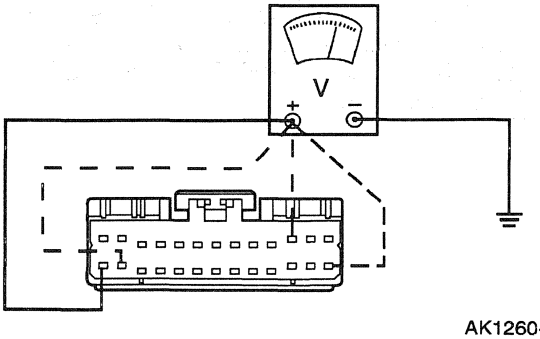 AK1260-A	1 Measure the voltage at each of the following steering column/ignition/lighting control module connector C287 pins. Note the voltage at each pin: • C287-14, Circuit 906 (R/O) • C287-26, Circuit 19 (LB/R) • C287-15, Circuit 1055 (W/LG) • C287-11, Circuit 1056 (DB/LG) • Is the voltage reading on any circuit B+? → **Yes** GO to Communication Network Diagnostics in Section 418-00 to diagnose the network concern. → **No** For each suspect circuit, REFER to the Electrical and Vacuum Troubleshooting Manual, Cell 58, Lighting Control Module and Cell 11, Circuit Protection/Fuse Panel to identify the subsystem in need of service. REPAIR as required. GO to **B4.**

(Continued)

Official Licensed Product Ford Motor Company

DIAGNOSIS AND TESTING (Continued)

PINPOINT TEST B: NO COMMUNICATION WITH THE STEERING COLUMN/IGNITION/LIGHTING CONTROL MODULE (Continued)

TEST CONDITIONS	TEST DETAILS/RESULTS/ACTIONS
B4 CHECK FOR B+ SUPPLY ON STEERING COLUMN/IGNITION/LIGHTING CONTROL MODULE CONNECTOR C289	
1 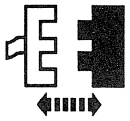 SCIL Connector C289 2 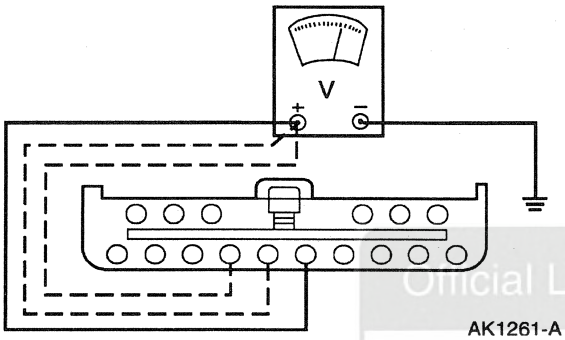 AK1261-A	2 Measure the voltage at each of the following steering column/ignition/lighting control module connector C289 pins. Note the voltage reading at each pin: • C289-5, Circuit 1058 (BR/W) • C289-6, Circuit 1057 (O/BK) • C289-7, Circuit 908 (PK/LG) • Is the voltage reading on any circuit B+? → **Yes** GO to Communication Network Diagnostics in Section 418-00 to diagnose the network concern. → **No** For each suspect circuit, REFER to the Electrical and Vacuum Troubleshooting Manual, Cell 58, Lighting Control Module and Cell 11, Circuit Protection/Fuse Panel to identify the subsystem in need of service. REPAIR as required. REPEAT the Data Link Diagnostic Test.

Official Licensed Product
Ford Motor Company

DIAGNOSIS AND TESTING (Continued)

PINPOINT TEST C: ALL POWER WINDOWS ARE INOPERATIVE

TEST CONDITIONS	TEST DETAILS/RESULTS/ACTIONS
C1 CHECK POWER SUPPLY TO CONTROL SWITCH	
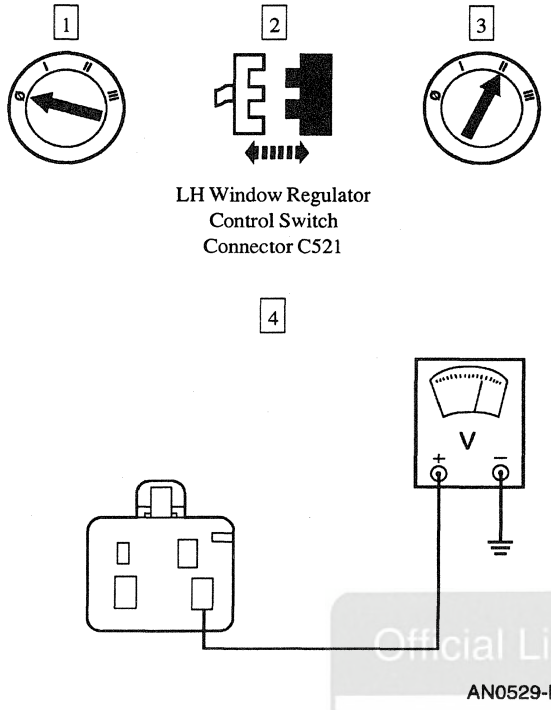	4 Measure the voltage at the LH window regulator control switch connector Pin C521-4, Circuit 792 (T/Y). • Is the voltage reading B+? → **Yes** GO to **C2**. → **No** GO to **C3**.
C2 CHECK CIRCUIT 57 (BK) FOR AN OPEN	
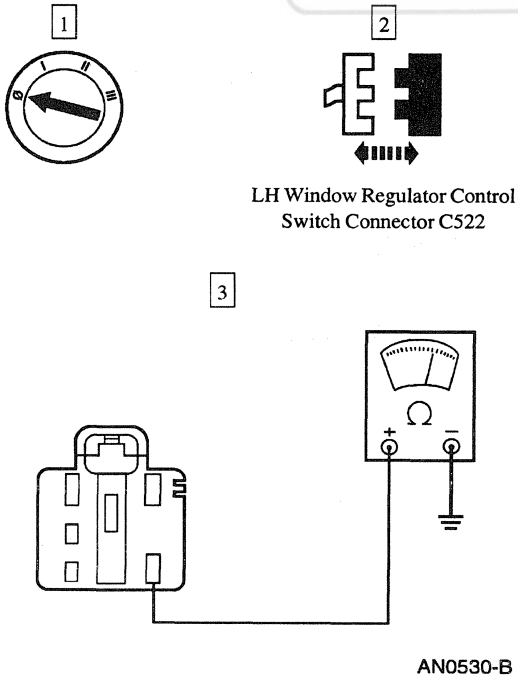	3 Measure the resistance between the LH window regulator control switch connector Pin C522-5, Circuit 57 (BK) and ground. • Is the resistance 5 ohms or less? → **Yes** REPLACE the LH window regulator control switch . TEST the system for normal operation. → **No** REPAIR Circuit 57 (BK) for an open. TEST the system for normal operation.

Official Licensed Product

(Continued)

DIAGNOSIS AND TESTING (Continued)

PINPOINT TEST C: ALL POWER WINDOWS ARE INOPERATIVE (Continued)

TEST CONDITIONS	TEST DETAILS/RESULTS/ACTIONS
C3 CHECK THE SLIDING ROOF PANEL OPERATION	
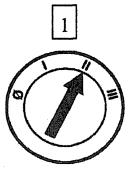	2 Operate the sliding roof panel. • Does the sliding roof panel open? → **Yes** GO to **C5.** → **No** GO to **C4.**
C4 CHECK CIRCUIT 793 (BK/Y) FOR AN OPEN	
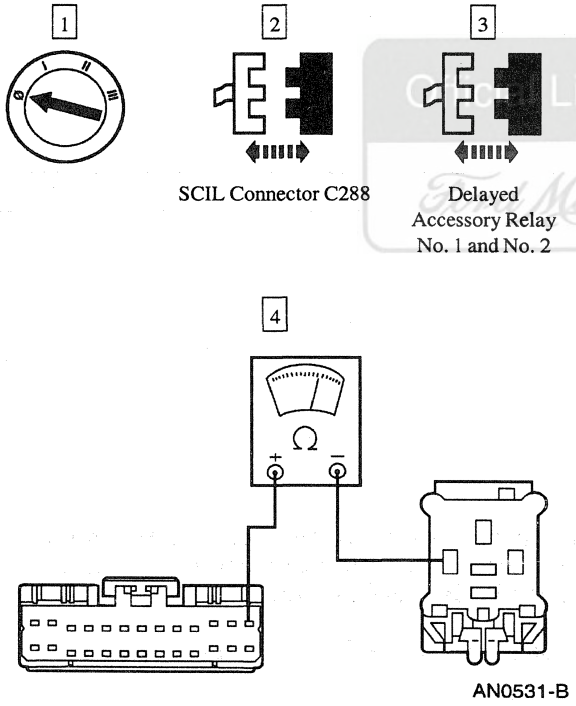	4 Measure the resistance of Circuit 793 (BK/Y) between the delayed accessory relay No. 2 connector Pin C2001-86 and the steering column/ignition/lighting control module connector Pin C288-13. • Is the resistance 5 ohms or less? → **Yes** REPLACE the steering column/ignition/lighting control module. TEST the system for normal operation. → **No** REPAIR Circuit 793 (BK/Y) for an open. TEST the system for normal operation.

Ford Motor Company Licensed Product

(Continued)

DIAGNOSIS AND TESTING (Continued)

PINPOINT TEST C: ALL POWER WINDOWS ARE INOPERATIVE (Continued)

TEST CONDITIONS	TEST DETAILS/RESULTS/ACTIONS
C5 CHECK THE INPUT TO DELAYED ACCESSORY RELAY	
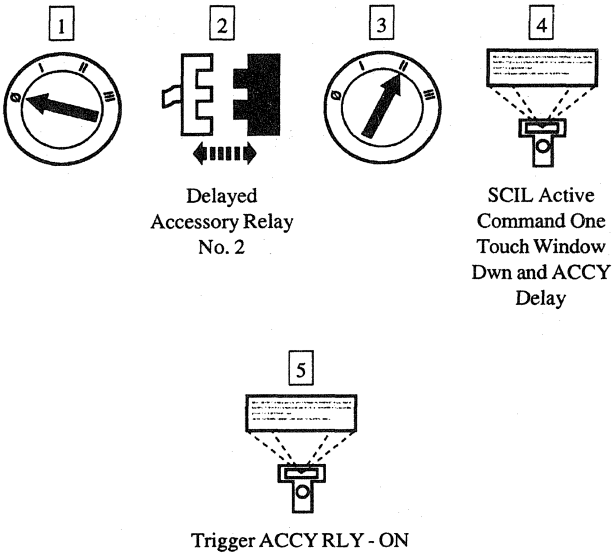	6 Measure the resistance between the delayed accessory relay connector Pin C2001-86, Circuit 793 (BK/Y) and ground. • Is the resistance 5 ohms or less? → **Yes** GO to **C6**. → **No** REPAIR Circuit 793 (BK/Y) for an open. TEST the system for normal operation.
C6 CHECK CIRCUIT 1001 (W/Y) FOR AN OPEN	
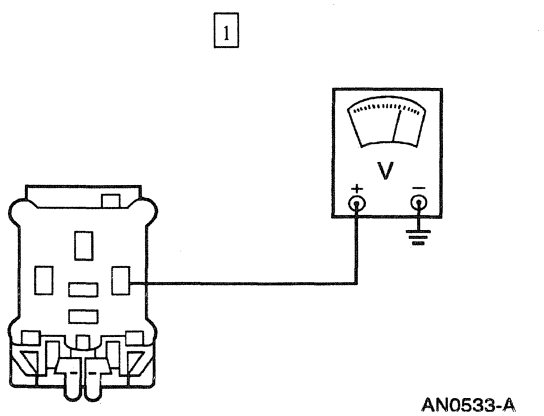	1 Measure the voltage at the delayed accessory relay No. 2 connector Pin C2001-85, Circuit 1001 (W/Y). Note the reading.

(Continued)

Official Licensed Ford Motor Company

DIAGNOSIS AND TESTING (Continued)

PINPOINT TEST C: ALL POWER WINDOWS ARE INOPERATIVE (Continued)

TEST CONDITIONS	TEST DETAILS/RESULTS/ACTIONS
C6 CHECK CIRCUIT 1001 (W/Y) FOR AN OPEN (Continued)	
2 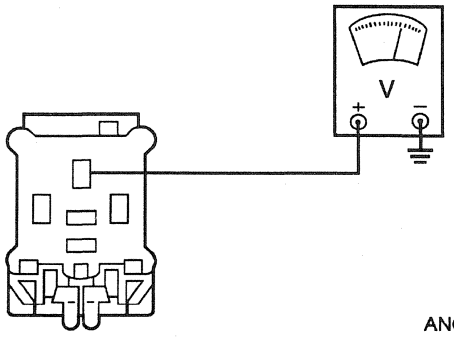 AN0534-A	2 Measure the voltage at the delayed accessory relay No. 2 connector Pin C2001-30, Circuit 1001 (W/Y). Note the reading. • Are both voltage readings B+? → **Yes** GO to **C7**. → **No** REPAIR Circuit 1001 (W/Y) for an open. TEST the system for normal operation.
C7 CHECK CIRCUIT 792 (T/Y) FOR A SHORT TO GROUND	
1 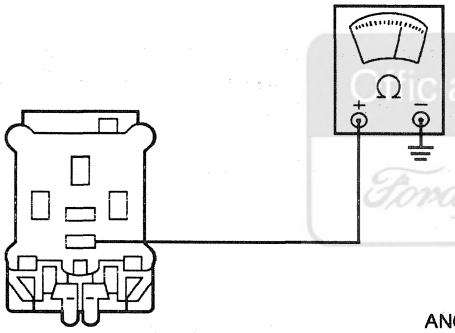 AN0535-A	1 Measure the resistance between the delayed accessory relay No. 2 connector Pin C2001-87, Circuit 792 (T/Y) and ground. • Is the resistance 100 ohms or less? → **Yes** GO to **C8**. → **No** GO to **C11**.

Critical Licensed Product
Ford Motor Company

(Continued)

DIAGNOSIS AND TESTING (Continued)

PINPOINT TEST C: ALL POWER WINDOWS ARE INOPERATIVE (Continued)

TEST CONDITIONS	TEST DETAILS/RESULTS/ACTIONS
C8 CHECK THE DRIVER DOOR MODULE FOR A SHORT TO GROUND	
1 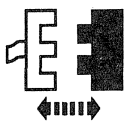 DDM Connector C457 2 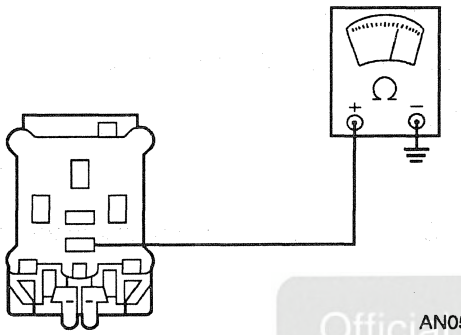 AN0535-A	2 Measure the resistance between the delayed accessory relay No. 2 connector Pin C2001-87, Circuit 792 (T/Y) and ground. • Is the resistance 10 K ohms or less? → **Yes** GO to **C9**. → **No** REPLACE the driver door module. TEST the system for normal operation.
C9 CHECK THE LH WINDOW REGULATOR CONTROL SWITCH FOR A SHORT TO GROUND	
1 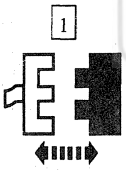 LH Window Regulator Control Switch Connector C521 2 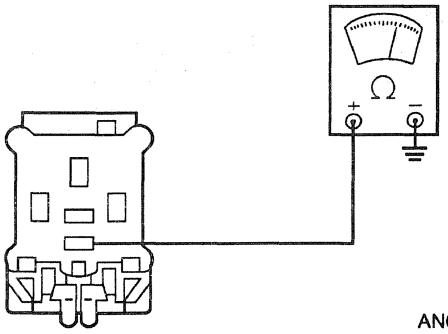 AN0535-A	2 Measure the resistance between the delayed accessory relay No. 2 connector Pin C2001-87, Circuit 792 (T/Y) and ground. • Is the resistance 10 K ohms or less? → **Yes** GO to **C10**. → **No** REPLACE the LH window regulator control switch. TEST the system for normal operation.

Official Licensed Product
Ford Motor Company

(Continued)

DIAGNOSIS AND TESTING (Continued)

PINPOINT TEST C: ALL POWER WINDOWS ARE INOPERATIVE (Continued)

TEST CONDITIONS	TEST DETAILS/RESULTS/ACTIONS
C10 CHECK THE RH WINDOW REGULATOR CONTROL SWITCH FOR A SHORT TO GROUND	
1 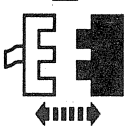 LH Window Regulator Control Switch Connector C521 2 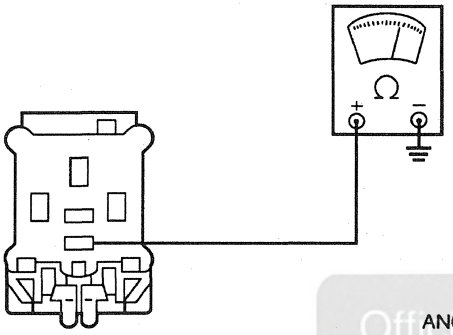 AN0535-A	2 Measure the resistance between the delayed accessory relay No. 2 connector Pin C2001-87, Circuit 792 (T/Y) and ground. • Is the resistance 10 K ohms or less? → **Yes** GO to **C11.** → **No** REPLACE the RH window regulator control switch. TEST the system for normal operation.
C11 CHECK CIRCUIT 792 (T/Y) FOR AN OPEN	
1 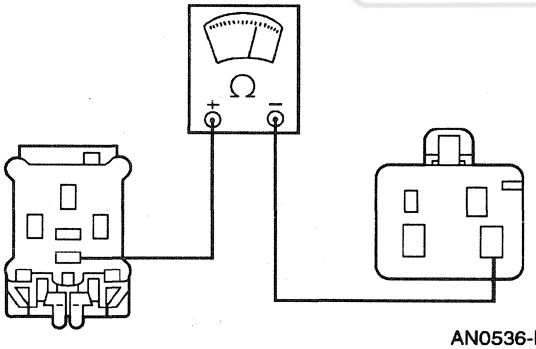 AN0536-B	1 Measure the resistance of Circuit 792 (T/Y) between the delayed accessory relay No. 2 connector Pin C2001-87 and the LH window regulator control switch connector Pin C521-4. • Is the resistance 5 ohms or less? → **Yes** REPLACE the delayed accessory relay No. 2. TEST the system for normal operation. → **No** REPAIR Circuit 792 (T/Y) for an open. TEST the system for normal operation.

Official Licensed Product
Ford Motor Company

DIAGNOSIS AND TESTING (Continued)

PINPOINT TEST D: A SINGLE POWER WINDOW IS INOPERATIVE

TEST CONDITIONS	TEST DETAILS/RESULTS/ACTIONS
D1 CHECK THE RH POWER WINDOW OPERATION	
1 	2 Operate the RH power window up and down. • Does the window operate? → **Yes** GO to **D2**. → **No** GO to **D15**.
D2 CHECK PID D__PW__SW	
1 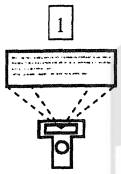 Select DDM PID D__PW__SW	2 Press the LH window regulator control switch to the UP position. • Does the PID D__PW__SW read UP? → **Yes** GO to **D3**. → **No** GO to **D9**.

Official Licensed Product
Ford Motor Company

(Continued)

DIAGNOSIS AND TESTING (Continued)

PINPOINT TEST D: A SINGLE POWER WINDOW IS INOPERATIVE (Continued)

TEST CONDITIONS	TEST DETAILS/RESULTS/ACTIONS
D3 CHECK THE LH WINDOW REGULATOR ELECTRIC DRIVE	
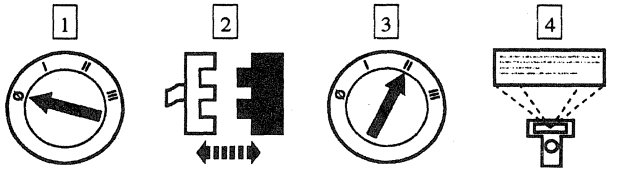 LH Window Regulator Electric Drive Connector C516 DDM Active Command Front Window Control	
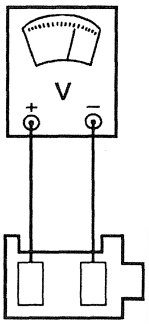 AN0537-A	5 Measure the voltage between the LH window regulator electric drive Connector C516, Circuit 193 (Y/LG) and Circuit 227 (Y).
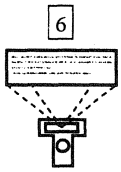 Trigger DR DOWN__ON	• Is the voltage reading B+? → **Yes** REPLACE the LH window regulator electric drive. TEST the system for normal operation. → **No** Trigger DR DOWN - OFF. GO to **D4**.

Official Licensed Product
Ford Motor Company

(Continued)

DIAGNOSIS AND TESTING (Continued)

PINPOINT TEST D: A SINGLE POWER WINDOW IS INOPERATIVE (Continued)

TEST CONDITIONS	TEST DETAILS/RESULTS/ACTIONS
D4 CHECK CIRCUIT 227 (Y) FOR A SHORT TO B+	
1 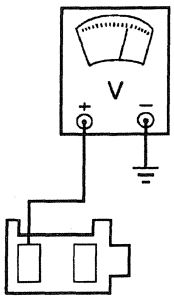 AN0538-B	1 Measure the voltage at the LH window regulator electric drive Connector C516, Circuit 227 (Y). 2 Press the LH window regulator control switch to the UP position. • Is the voltage reading B+? → **Yes** GO to **D5.** → **No** REPAIR Circuit 227 (Y) for an open. TEST the system for normal operation.
D5 CHECK CIRCUIT 193 (Y/LG) FOR A SHORT TO GROUND	
1 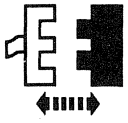 LH Window Regulator Control Switch Connector C521 2 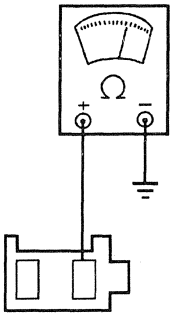 AN0540-A	2 Measure the resistance between the LH window regulator electric drive Connector C516, Circuit 193 (Y/LG) and ground. • Is the resistance 10K ohms or less? → **Yes** GO to **D6.** → **No** GO to **D7.**

Official Licensed Product
Ford Motor Company

(Continued)

DIAGNOSIS AND TESTING (Continued)

PINPOINT TEST D: A SINGLE POWER WINDOW IS INOPERATIVE (Continued)

TEST CONDITIONS	TEST DETAILS/RESULTS/ACTIONS
D6 CHECK THE DRIVER DOOR MODULE FOR SHORT TO GROUND	
1 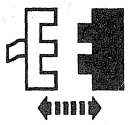 DDM Connector C457 2 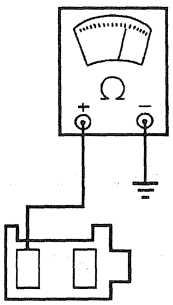 AN0540-B	2 Measure the resistance between the LH window regulator electric drive Connector C516, Circuit 193 (Y/LG) and ground. • Is the resistance 10 K ohms or less? → **Yes** REPAIR Circuit 193 (Y/LG) for a short to ground. TEST the system for normal operation. → **No** REPLACE the driver door module. TEST the system for normal operation.
D7 CHECK CIRCUIT 193 (Y/LG) FOR AN OPEN	
1 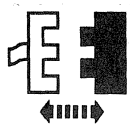 DDM Connector C457 2 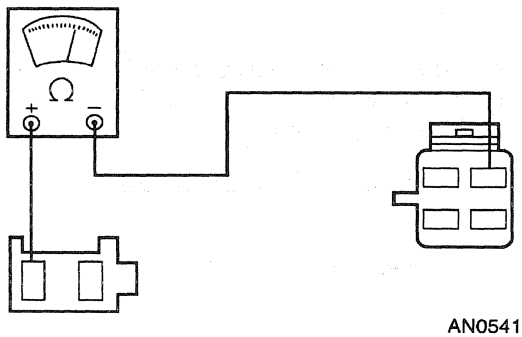 AN0541-B	2 Measure the resistance of Circuit 193 (Y/LG) between the DDM connector Pin C457-2 and the LH window regulator electric drive Connector C516. • Is the resistance 5 ohms or less? → **Yes** GO to **D8.** → **No** REPAIR Circuit 193 (Y/LG) for an open. TEST the system for normal operation.

Official Licensed Product Ford Motor Company

(Continued)

DIAGNOSIS AND TESTING (Continued)

PINPOINT TEST D: A SINGLE POWER WINDOW IS INOPERATIVE (Continued)

TEST CONDITIONS	TEST DETAILS/RESULTS/ACTIONS
D8 CHECK CIRCUIT 792 (T/Y) FOR AN OPEN	
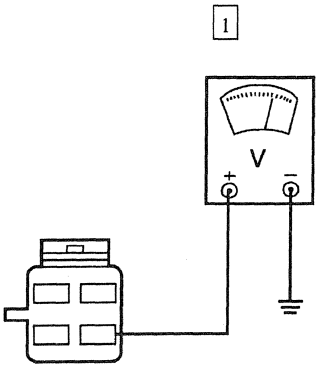 AN0673-A	1 Measure the voltage at DDM connector Pin C457-4, Circuit 792 (T/Y). • Is the voltage reading B+? → **Yes** REPLACE the driver door module. TEST the system for normal operation. → **No** REPAIR Circuit 792 (T/Y) for an open. TEST the system for normal operation.
D9 CHECK THE DOWN INPUT TO THE DRIVER DOOR MODULE	
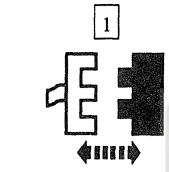 DDM Connector C457 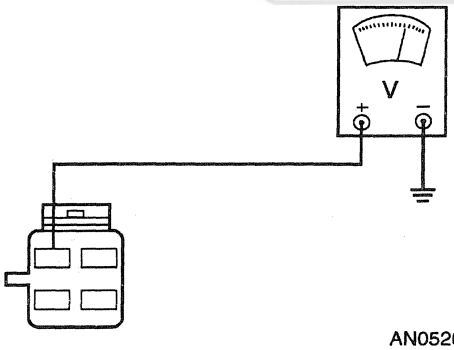 AN0526-B	2 Measure the voltage at DDM connector Pin C457-1, Circuit 226 (W/BK). 3 Press the LH window regulator control switch to the DOWN position. • Is the voltage reading B+? → **Yes** GO to **D12.** → **No** GO to **D10.**

Official Licensed Product
Ford Motor Company

(Continued)

DIAGNOSIS AND TESTING (Continued)

PINPOINT TEST D: A SINGLE POWER WINDOW IS INOPERATIVE (Continued)

TEST CONDITIONS	TEST DETAILS/RESULTS/ACTIONS
D10 CHECK FOR A SHORTED LH WINDOW REGULATOR CONTROL SWITCH	
1 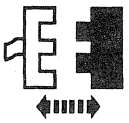 LH Window Regulator Control Switch Connector C521 2 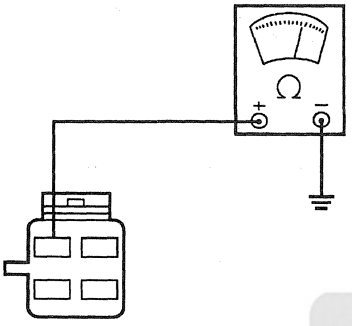 AN0542-B	2 Measure the resistance between the DDM connector Pin C457-1, Circuit 226 (W/BK) and ground. • Is the resistance 10 K ohms or less? → **Yes** REPAIR Circuit 226 (W/BK) for a short to ground. TEST the system for normal operation. → **No** GO to **D11**.
D11 CHECK CIRCUIT 226 (W/BK) FOR AN OPEN	
1 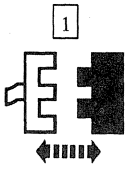 LH Window Regulator Control Switch Connector C521 2 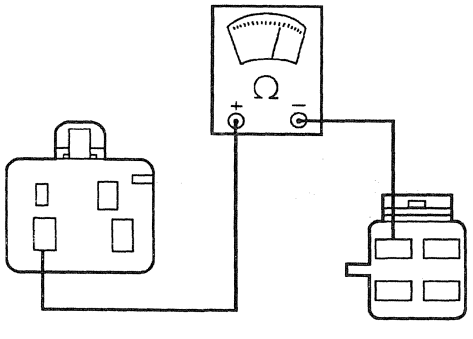 AN0543-B	2 Measure the resistance of Circuit 226 (W/BK) between the DDM connector Pin C457-1 and the LH window regulator control switch connector Pin C521-3. • Is the resistance 5 ohms or less? → **Yes** REPLACE the LH window regulator control switch. TEST the system for normal operation. → **No** REPAIR Circuit 226 (W/BK) for an open. TEST the system for normal operation.

Official Licensed Product
Ford Motor Company

(Continued)

DIAGNOSIS AND TESTING (Continued)

PINPOINT TEST D: A SINGLE POWER WINDOW IS INOPERATIVE (Continued)

TEST CONDITIONS	TEST DETAILS/RESULTS/ACTIONS
D12 CHECK THE UP INPUT TO THE DRIVER DOOR MODULE	
1 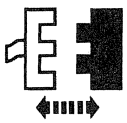 DDM Connector C456	
2 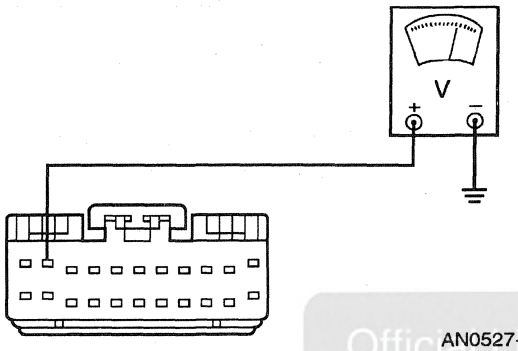 AN0527-B	2 Measure the voltage at DDM connector Pin C456-2, Circuit 227 (Y).
	3 Press the LH window regulator control switch to the UP position. • Is the voltage reading B+? → **Yes** REPLACE the driver door module. TEST the system for normal operation. → **No** GO to **D13**.

Official Licensed Product
Ford Motor Company®

(Continued)

DIAGNOSIS AND TESTING (Continued)

PINPOINT TEST D: A SINGLE POWER WINDOW IS INOPERATIVE (Continued)

TEST CONDITIONS	TEST DETAILS/RESULTS/ACTIONS
D13 CHECK THE LH WINDOW REGULATOR CONTROL SWITCH FOR AN INTERNAL SHORT	
1 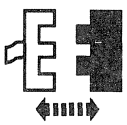 LH Window Regulator Control Switch Connector C521 2 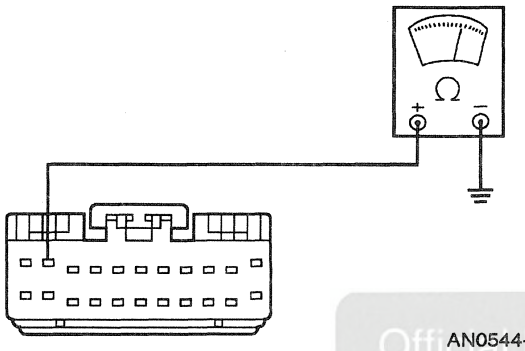 AN0544-B	2 Measure the resistance between the DDM connector Pin C456-2, Circuit 227 (Y) and ground. • Is the resistance 10 K ohms or less? → **Yes** REPAIR Circuit 227 (Y) for a short to ground. TEST the system for normal operation. → **No** GO to **D14.**
D14 CHECK CIRCUIT 227 (Y) FOR AN OPEN	
1 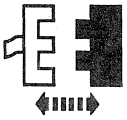 LH Window Regulator Control Switch Connector C521 2 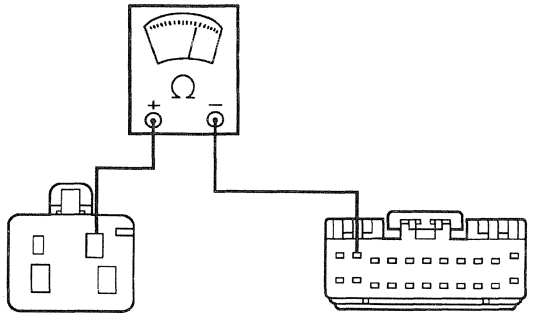 AN0545-B	2 Measure the resistance of Circuit 227 (Y) between the DDM connector Pin C456-2 and the LH window regulator control switch connector Pin C521-2. • Is the resistance 5 ohms or less? → **Yes** REPLACE the LH window regulator control switch. TEST the system for normal operation. → **No** REPAIR Circuit 227 (Y) for an open. TEST the system for normal operation.

Official Licensed Product
Ford Motor Company

(Continued)

DIAGNOSIS AND TESTING (Continued)

PINPOINT TEST D: A SINGLE POWER WINDOW IS INOPERATIVE (Continued)

TEST CONDITIONS	TEST DETAILS/RESULTS/ACTIONS
D15 CHECK THE POWER SUPPLY TO THE RH WINDOW REGULATOR CONTROL SWITCH	
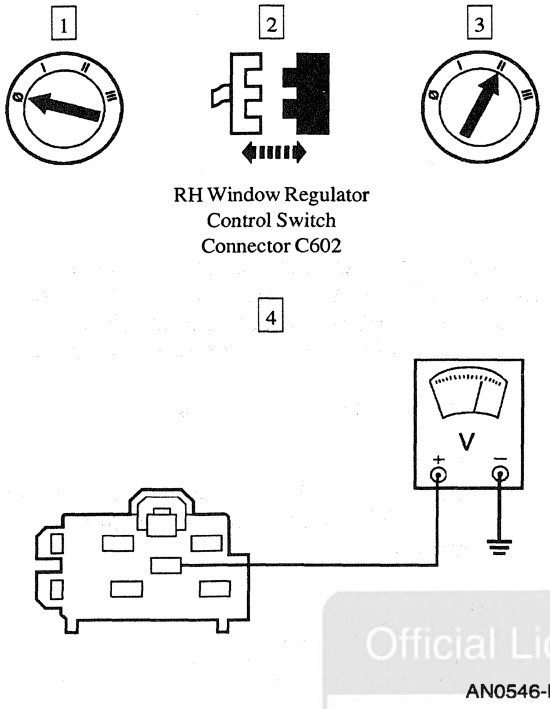	4 Measure the voltage at the RH window regulator control switch connector Pin C602-4, Circuit 792 (T/Y). • Is the voltage reading B+? → **Yes** GO to **D16**. → **No** REPAIR Circuit 792 (T/Y) for an open. TEST the system for normal operation.
D16 CHECK CIRCUIT 313 (W/Y)	
NOTE: Make sure the LH window regulator control switch is in the neutral position.	
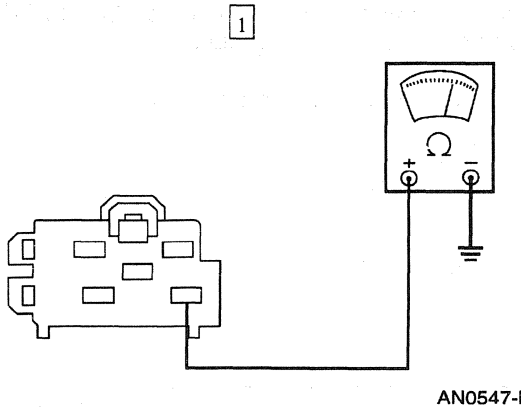	1 Measure the resistance between the RH window regulator control switch connector Pin C602-7, Circuit 313 (W/Y) and ground. • Is the resistance 5 ohms or less? → **Yes** GO to **D18**. → **No** GO to **D17**.

(Continued)

Official Licensed Product
Ford Motor Company

DIAGNOSIS AND TESTING (Continued)

PINPOINT TEST D: A SINGLE POWER WINDOW IS INOPERATIVE (Continued)

TEST CONDITIONS	TEST DETAILS/RESULTS/ACTIONS
D17 CHECK CIRCUIT 313 (W/Y) FOR AN OPEN	
1 LH Window Regulator Control Switch Connector C522 2 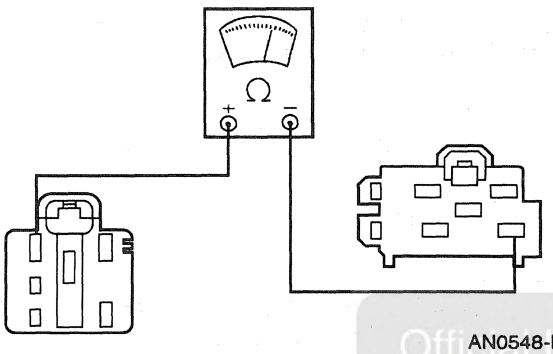 AN0548-B	2 Measure the resistance of Circuit 313 (W/Y) between the RH window regulator control switch connector Pin C602-7 and the LH window regulator control switch connector Pin C522-1. • Is the resistance 5 ohms or less? → **Yes** REPLACE the LH window regulator control switch. TEST the system for normal operation. → **No** REPAIR Circuit 313 (W/Y) for an open. TEST the system for normal operation.
D18 CHECK CIRCUIT 314 (T/LB)	
NOTE: Make sure the LH window regulator control switch is in the neutral position.	
1 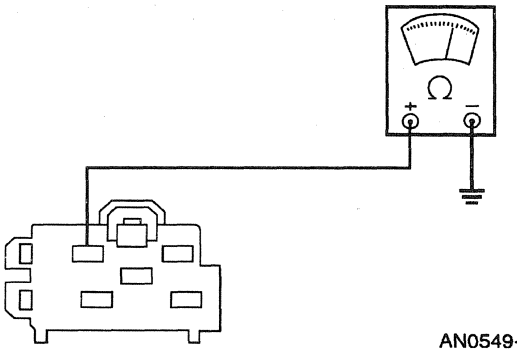 AN0549-B	1 Measure the resistance between the RH window regulator control switch connector Pin C602-2, Circuit 314 (T/LB) and ground. • Is the resistance 5 ohms or less? → **Yes** GO to **D20**. → **No** GO to **D19**.

(Continued)

DIAGNOSIS AND TESTING (Continued)

PINPOINT TEST D: A SINGLE POWER WINDOW IS INOPERATIVE (Continued)

TEST CONDITIONS	TEST DETAILS/RESULTS/ACTIONS
D19 CHECK CIRCUIT 314 (T/LB) FOR AN OPEN	
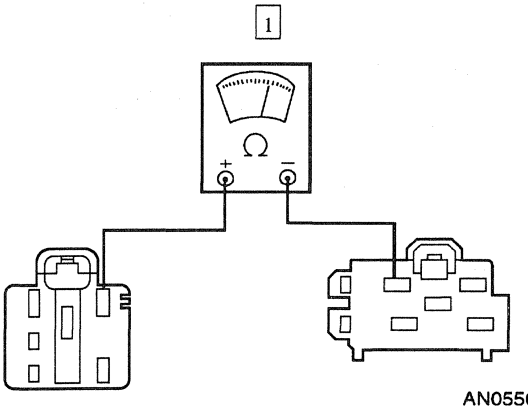 AN0550-B	1 Measure the resistance of Circuit 314 (T/LB) between the RH window regulator control switch connector Pin C602-2 and the LH window regulator control switch connector Pin C522-2. • Is the resistance 5 ohms or less? → **Yes** REPLACE the LH window regulator control switch. TEST the system for normal operation. → **No** REPAIR Circuit 314 (T/LB) for an open. TEST the system for normal operation.
D20 CHECK THE RH WINDOW REGULATOR ELECTRIC DRIVE	
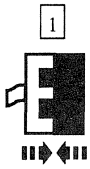 RH Window Regulator Control Switch Connector C602 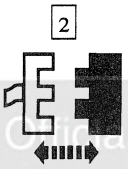 RH Window Regulator Electric Drive Connector C601 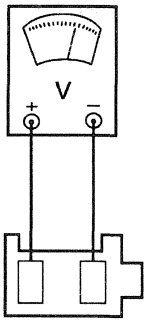 AN0537-A	3 Measure the voltage between the RH window regulator electric drive Connector C601, Circuit 227 (Y) and Circuit 226 (W/BK). 4 Press the RH window regulator control switch to the UP position. • Is the voltage reading B+? → **Yes** REPLACE the RH window regulator electric drive. TEST the system for normal operation. → **No** GO to **D21**.

Original Licensed Product Ford Motor Company

(Continued)

DIAGNOSIS AND TESTING (Continued)

PINPOINT TEST D: A SINGLE POWER WINDOW IS INOPERATIVE (Continued)

TEST CONDITIONS	TEST DETAILS/RESULTS/ACTIONS
D21 CHECK CIRCUIT 227 (Y) FOR A SHORT	
NOTE: Make sure both the RH and the LH window regulator control switches are in the neutral position.	
1 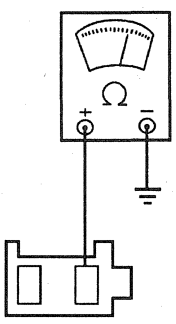 AN0540-A	1 Measure the resistance between the RH window regulator electric drive Connector C601, Circuit 227 (Y) and ground. • Is the resistance 5 ohms or less? → **Yes** GO to **D24**. → **No** GO to **D22**.
D22 CHECK FOR A SHORTED RH WINDOW REGULATOR CONTROL SWITCH	
1 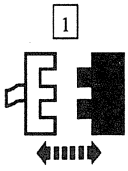 RH Window Regulator Control Switch Connector C602 2 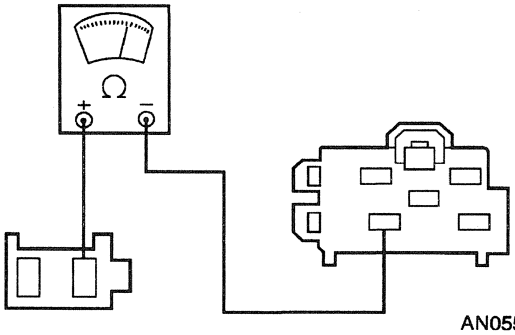 AN0551-B	2 Measure the resistance of Circuit 227 (Y) between the RH window regulator electric drive Connector C601 and the RH window regulator control switch connector Pin C602-6. • Is the resistance 5 ohms or less? → **Yes** GO to **D23**. → **No** REPAIR Circuit 227 (Y) for an open. TEST the system for normal operation.

Official Licensed Product Ford Motor Company

(Continued)

DIAGNOSIS AND TESTING (Continued)

PINPOINT TEST D: A SINGLE POWER WINDOW IS INOPERATIVE (Continued)

TEST CONDITIONS	TEST DETAILS/RESULTS/ACTIONS
D23 CHECK CIRCUIT 227 (Y) FOR A SHORT TO GROUND	
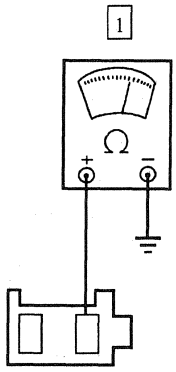 AN0540-A	1 Measure the resistance between the RH window regulator electric drive Connector C601, Circuit 227 (Y) and ground. • Is the resistance 10 K ohms or less? → **Yes** REPAIR Circuit 227 (Y) for a short to ground. TEST the system for normal operation. → **No** REPLACE the RH window regulator control switch. TEST the system for normal operation.
D24 CHECK THE RH WINDOW REGULATOR CONTROL SWITCH	
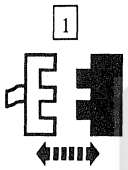 RH Window Regulator Control Switch Connector C602 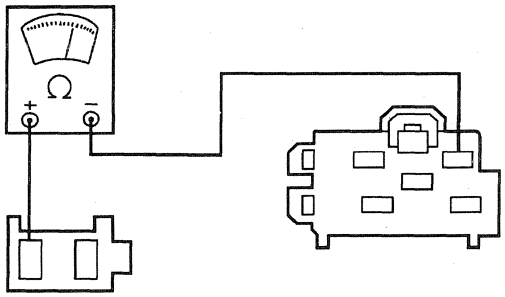 AN0552-B	2 Measure the resistance of Circuit 226 (W/BK) between the RH window regulator electric drive Connector C601 and the RH window regulator control switch connector Pin C602-3. • Is the resistance 5 ohms or less? → **Yes** GO to **D25**. → **No** REPAIR Circuit 226 (W/BK) for an open. TEST the system for normal operation.

Official Licensed Product
Ford Motor Company

(Continued)

DIAGNOSIS AND TESTING (Continued)

PINPOINT TEST D: A SINGLE POWER WINDOW IS INOPERATIVE (Continued)

TEST CONDITIONS	TEST DETAILS/RESULTS/ACTIONS
D25 CHECK CIRCUIT 226 (W/BK) FOR A SHORT TO GROUND	
1 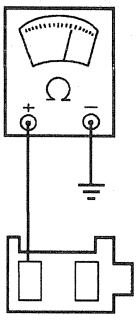 AN0553-A	1 Measure the resistance between the RH window regulator electric drive Connector C601, Circuit 226 (W/BK) and ground. • Is the resistance 10 K ohms or less? → **Yes** REPAIR Circuit 226 (W/BK) for a short to ground. TEST the system for normal operation. → **No** REPLACE the RH window regulator control switch. TEST the system for normal operation.

PINPOINT TEST E: THE ONE TOUCH DOWN FEATURE IS INOPERATIVE

TEST CONDITIONS	TEST DETAILS/RESULTS/ACTIONS
E1 CHECK THE LH POWER WINDOW	
1 	2 Operate the LH window regulator control switch to the UP and DOWN positions. • Does the LH window operate properly? → **Yes** GO to **E2**. → **No** GO to Pinpoint Test D.

Official Licensed Product
Ford Motor Company

(Continued)

DIAGNOSIS AND TESTING (Continued)

PINPOINT TEST E: THE ONE TOUCH DOWN FEATURE IS INOPERATIVE (Continued)

TEST CONDITIONS	TEST DETAILS/RESULTS/ACTIONS
E2 CHECK PID OTD__SW	
1 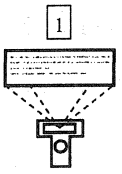 DDM PID OTD__SW	2 Press the LH window regulator control switch to the DOWN position. • Does the PID OTD__SW change from OFF to DOWN? → **Yes** REPLACE the driver door module. TEST the system for normal operation. → **No** GO to **E3**.
E3 CHECK CIRCUIT 903 (R) FOR AN OPEN	
1 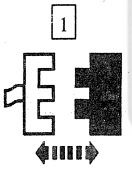 LH Window Regulator Control Switch Connector C521 2 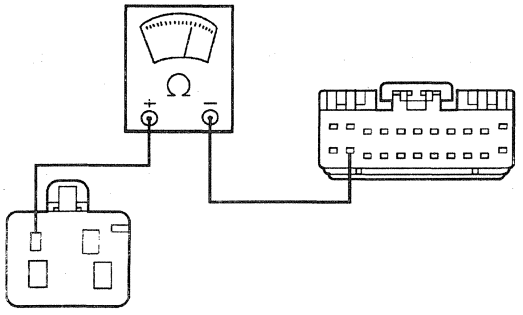 AN0555-B	2 Measure the resistance of Circuit 903 (R) between the DDM connector Pin C456-13 and the LH window regulator control switch connector Pin C521-1. • Is the resistance 5 ohms or less? → **Yes** REPLACE the LH window regulator control switch. TEST the system for normal operation. → **No** REPAIR Circuit 903 (R) for an open. TEST the system for normal operation.

Official Licensed Product
Ford Motor Company

DIAGNOSIS AND TESTING (Continued)

PINPOINT TEST F: THE POWER WINDOW SWITCH WILL NOT ILLUMINATE

TEST CONDITIONS	TEST DETAILS/RESULTS/ACTIONS
F1 CHECK THE INSTRUMENT PANEL ILLUMINATION	
	1 Turn the headlamp switch to the PARK position. • Does the instrument panel illuminate? → **Yes** GO to **F2** for the LH window regulator control switch or **F4** for the RH window regulator control switch. → **No** REFER to Section 413-00.
F2 CHECK THE INPUT TO THE SWITCH	
1 LH Window Regulator Control Switch Connector C522 3 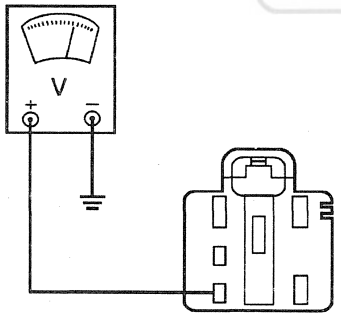 AN0652-A	2 Turn the headlamp switch to the PARK position. 3 Measure the voltage at the LH window regulator control switch connector Pin C522-4, Circuit 235 (R/BK). • Is the voltage 10 volts or more? → **Yes** GO to **F3**. → **No** REPAIR Circuit 235 (R/BK) for an open. TEST the system for normal operation.

Official Licensed Product
Ford Motor Co.

(Continued)

DIAGNOSIS AND TESTING (Continued)

PINPOINT TEST F: THE POWER WINDOW SWITCH WILL NOT ILLUMINATE (Continued)

TEST CONDITIONS	TEST DETAILS/RESULTS/ACTIONS
F3 CHECK CIRCUIT 57 (BK)	
1 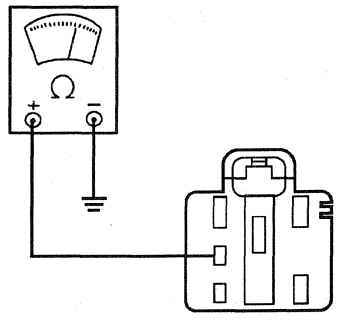 AN0653-A	1 Measure the resistance between the LH window regulator control switch connector Pin C522-3, Circuit 57 (BK) and ground. • Is the resistance 5 ohms or less? → **Yes** REPLACE the LH window regulator control switch. TEST the system for normal operation. → **No** REPAIR Circuit 57 (BK) for an open. TEST the system for normal operation.
F4 CHECK THE INPUT TO THE RH WINDOW REGULATOR CONTROL SWITCH	
1 RH Window Regulator Control Switch Connector C602	2 Turn the headlamp switch to the PARK position.
3 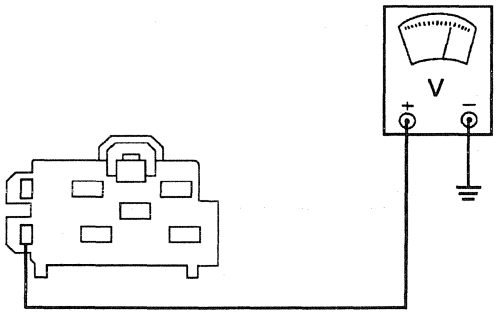 AN0558-B	3 Measure the voltage at the RH window regulator control switch connector Pin C602-5, Circuit 235 (R/BK). • Is the voltage 10 volts or more? → **Yes** GO to **F5**. → **No** REPAIR Circuit 235 (R/BK) for an open. TEST the system for normal operation.

Official Licensed Product
Ford Motor Company

(Continued)

DIAGNOSIS AND TESTING (Continued)

PINPOINT TEST F: THE POWER WINDOW SWITCH WILL NOT ILLUMINATE (Continued)

TEST CONDITIONS	TEST DETAILS/RESULTS/ACTIONS
F5 CHECK CIRCUIT 57 (BK) FOR AN OPEN	
1 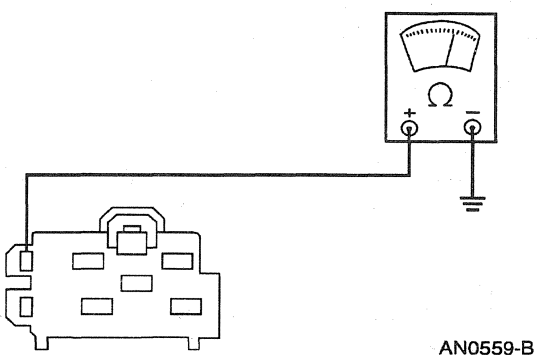 AN0559-B	1 Measure the resistance between the RH window regulator control switch connector Pin C602-1, Circuit 57 (BK) and ground. • Is the resistance 5 ohms or less? → **Yes** REPLACE the RH window regulator control switch. TEST the system for normal operation. → **No** REPAIR Circuit 57 (BK) for an open. TEST the system for normal operation.

PINPOINT TEST G: THE BACK WINDOW WILL NOT DEFROST

TEST CONDITIONS	TEST DETAILS/RESULTS/ACTIONS
G1 CHECK THE ON INDICATOR	
1 	2 Press the heated back window switch. • Does the ON indicator illuminate? → **Yes** GO to **G9**. → **No** GO to **G2**.

Official Licensed Product
Ford Motor Company

(Continued)

DIAGNOSIS AND TESTING (Continued)

PINPOINT TEST G: THE BACK WINDOW WILL NOT DEFROST (Continued)

TEST CONDITIONS	TEST DETAILS/RESULTS/ACTIONS
G2 CHECK THE BATTERY SUPPLY	
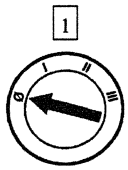 1 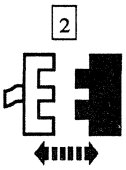 2 Heated Back Window Switch And Light Connector C339 3 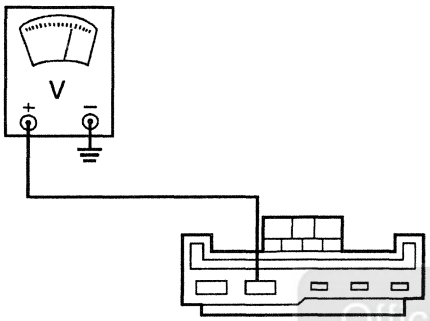 AN0560-B	3 Measure the voltage at the heated back window switch and light connector Pin C339-2, Circuit 185 (BK). • Is the voltage reading B+? → **Yes** GO to **G5**. → **No** GO to **G3**.
G3 CHECK FUSE 24 (40A)	
1 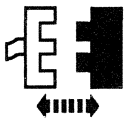 Power Distribution Box Fuse 24 (40A) 2 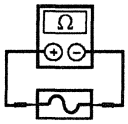 Power Distribution Box Fuse 24 (40A)	• Is Fuse 24 (40A) OK? → **Yes** REPAIR Circuit 185 (BK) for an open. TEST the system for normal operation. → **No** GO to **G4**.

(Continued)

Official Licensed Product
Ford Motor Company

DIAGNOSIS AND TESTING (Continued)

PINPOINT TEST G: THE BACK WINDOW WILL NOT DEFROST (Continued)

TEST CONDITIONS	TEST DETAILS/RESULTS/ACTIONS
G4 CHECK CIRCUIT 185 (BK) FOR A SHORT TO GROUND	
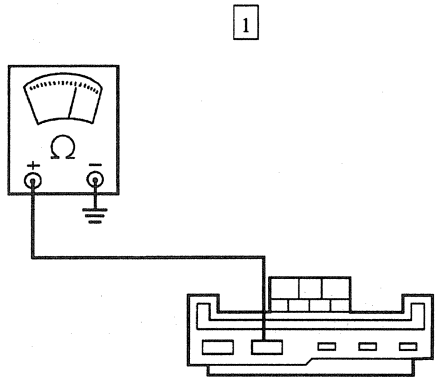 AN0561-B	1 Measure the resistance between the heated back window switch and light connector Pin C339-2, Circuit 185 (BK) and ground. • Is the resistance 10 K ohms or less? → **Yes** REPAIR Circuit 185 (BK) for a short to ground. TEST the system for normal operation. → **No** REPLACE the heated back window switch and light. TEST the system for normal operation.
G5 CHECK THE IGNITION POWER SUPPLY	
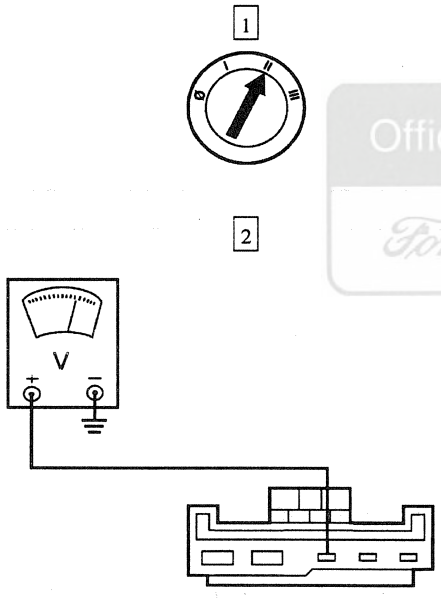 AN0562-B	2 Measure the voltage at the heated back window switch and light connector Pin C339-3, Circuit 298 (P/O). • Is the voltage reading B+? → **Yes** GO to **G8**. → **No** GO to **G6**.

Official Licensed Product
Ford Motor Co.

(Continued)

DIAGNOSIS AND TESTING (Continued)

PINPOINT TEST G: THE BACK WINDOW WILL NOT DEFROST (Continued)

TEST CONDITIONS	TEST DETAILS/RESULTS/ACTIONS
G6 CHECK FUSE 28 (10A)	
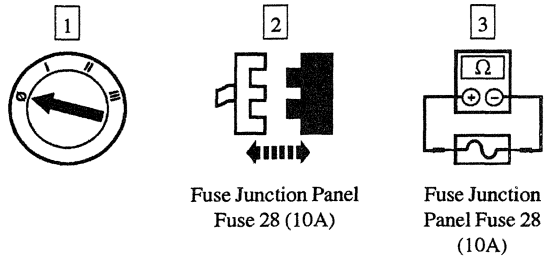 Fuse Junction Panel Fuse 28 (10A) — Fuse Junction Panel Fuse 28 (10A)	• Is Fuse 28 (10A) OK? → **Yes** REPAIR Circuit 298 (P/O) for an open. TEST the system for normal operation. → **No** GO to **G7**.
G7 CHECK CIRCUIT 298 (P/O) FOR A SHORT TO GROUND	
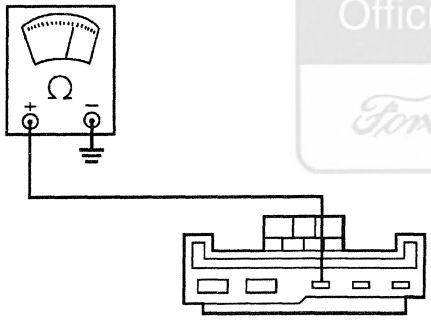 AN0563-B	1 Measure the resistance between the heated back window switch and light connector Pin C339-3, Circuit 298 (P/O) and ground. • Is the resistance 10 K ohms or less? → **Yes** REPAIR Circuit 298 (P/O) for a short to ground. TEST the system for normal operation. → **No** REPLACE the heated back window switch and light. TEST the system for normal operation.
G8 CHECK CIRCUIT 57 (BK) FOR AN OPEN	
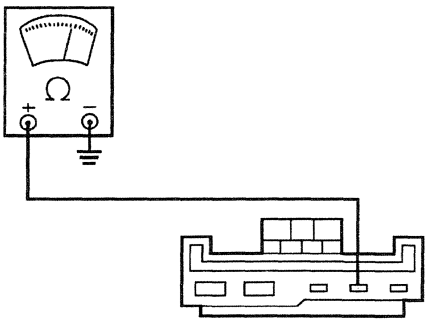 AN0564-B	1 Measure the resistance between the heated back window switch and light connector Pin C339-4, Circuit 57 (BK) and ground. • Is the resistance 5 ohms or less? → **Yes** REPLACE the heated back window switch and light. TEST the system for normal operation. → **No** REPAIR Circuit 57 (BK) for an open. TEST the system for normal operation.

(Continued)

Official Licensed Ford Motor Company

DIAGNOSIS AND TESTING (Continued)

PINPOINT TEST G: THE BACK WINDOW WILL NOT DEFROST (Continued)

TEST CONDITIONS	TEST DETAILS/RESULTS/ACTIONS
G9 CHECK THE HEATED BACK WINDOW SWITCH AND LIGHT OUTPUT	
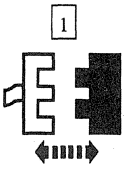 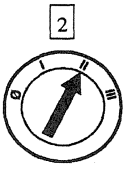 Fuse Junction Panel Fuse 30 (10A)	
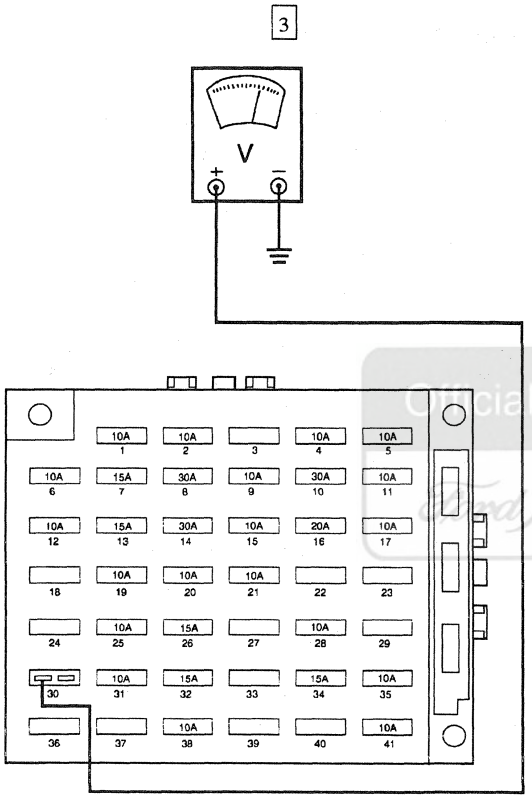 AN0510-A	3 Measure the voltage at the input cavity of fuse junction panel Fuse 30 (10A).
	4 Press the heated back window switch and light to ON. • Is the voltage reading B+? → **Yes** GO to **G11**. → **No** GO to **G10**.

(Continued)

Official Licensed Product Ford Motor Company

DIAGNOSIS AND TESTING (Continued)

PINPOINT TEST G: THE BACK WINDOW WILL NOT DEFROST (Continued)

TEST CONDITIONS	TEST DETAILS/RESULTS/ACTIONS
G10 CHECK CIRCUIT 186 (BR/LB) FOR AN OPEN	
1 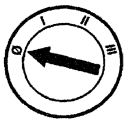 2 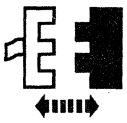 Heated Back Window Switch And Light Connector C339	
3 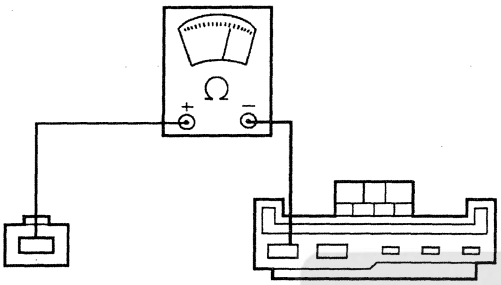 AN0565-B	3 Measure the resistance of Circuit 186 (BR/LB) between the heated back window switch and light connector Pin C339-1 and the hidden antenna module Connector C405. • Is the resistance 5 ohms or less? → **Yes** REPLACE the heated back window switch and light. TEST the system for normal operation. → **No** REPAIR Circuit 186 (BR/LB) for an open. TEST the system for normal operation.
G11 CHECK THE SUPPLY TO THE HIDDEN ANTENNA MODULE	
1 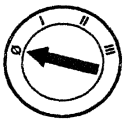 2 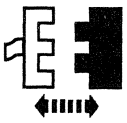 Hidden Antenna Module Connector C405	
3 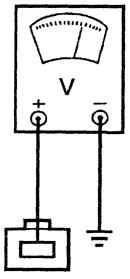 AN0566-A	3 Measure the voltage at the hidden antenna module Connector C405, Circuit 186 (BR/LB).

(Continued)

DIAGNOSIS AND TESTING (Continued)

PINPOINT TEST G: THE BACK WINDOW WILL NOT DEFROST (Continued)

TEST CONDITIONS	TEST DETAILS/RESULTS/ACTIONS
G11 CHECK THE SUPPLY TO THE HIDDEN ANTENNA MODULE (Continued)	
	4 Press the heated back window switch and light to ON. • Is the voltage reading B+? → **Yes** GO to **G12**. → **No** REPAIR Circuit 186 (BR/LB) for an open. TEST the system for normal operation.
G12 CHECK THE HIDDEN ANTENNA MODULE GROUND	
	1 Measure the resistance between the hidden antenna module and a known good chassis ground. • Is the resistance 5 ohms or less? → **Yes** GO to **G13**. → **No** REPAIR the hidden antenna module ground. TEST the system for normal operation.
G13 CHECK THE SUPPLY TO THE BACK WINDOW	
1 2 3 4 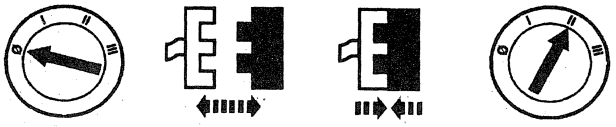 Heated Back Window Supply Connector C339 Hidden Antenna Module Connector C405	5 Measure the voltage at the heated back window power supply Connector C339. 6 Press the heated back window switch and light to ON. • Is the voltage reading B+? → **Yes** GO to **G15**. → **No** GO to **G14**.

(Continued)

Official Licensed Product

DIAGNOSIS AND TESTING (Continued)

PINPOINT TEST G: THE BACK WINDOW WILL NOT DEFROST (Continued)

TEST CONDITIONS	TEST DETAILS/RESULTS/ACTIONS
G14 CHECK THE SUPPLY CIRCUIT	
1 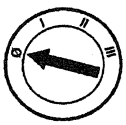 2 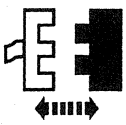 Hidden Antenna Module Back Window Supply Connection	3 Measure the resistance between the hidden antenna module back window supply connector and back window power supply connector. • Is the resistance 5 ohms or less? → **Yes** REPLACE the hidden antenna module. TEST the system for normal operation. → **No** REPLACE the heated back window supply cable. TEST the system for normal operation.
G15 CHECK THE HEATED BACK WINDOW GROUND	
1 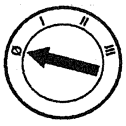 2 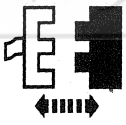 Heated Back Window Supply Connector C339	3 Measure the resistance between the heated back window ground connection and ground. • Is the resistance 5 ohms or less? → **Yes** PERFORM the heated back window grid wire test. REPAIR as required. → **No** GO to **G16**.

Official Licensed Product Ford Motor Company

(Continued)

DIAGNOSIS AND TESTING (Continued)

PINPOINT TEST G: THE BACK WINDOW WILL NOT DEFROST (Continued)

TEST CONDITIONS	TEST DETAILS/RESULTS/ACTIONS
G16 CHECK THE GROUND CIRCUIT	
1 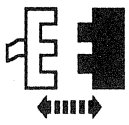 Hidden Antenna Module Back Window Ground Connection	2 Measure the resistance between the hidden antenna module back window ground connector and the back window ground connector. • Is the resistance 5 ohms or less? → **Yes** REPLACE the hidden antenna module. TEST the system for normal operation. → **No** REPLACE the heated back window ground. TEST the system for normal operation.

Official Licensed Product

PINPOINT TEST H: THE BACK WINDOW DEFROSTER WILL NOT SHUT OFF AUTOMATICALLY

TEST CONDITIONS	TEST DETAILS/RESULTS/ACTIONS
H1 CHECK THE HEATED BACK WINDOW SWITCH AND LIGHT	
	1 Perform the Heated Back Window Switch and Light component test. • Did the heated back window switch and light pass the test? → **Yes** REPAIR Circuit 186 (BR/LB) for a short to B+. TEST the system for normal operation. → **No** REPLACE the heated back window switch and light. TEST the system for normal operation.

DIAGNOSIS AND TESTING (Continued)

PINPOINT TEST J: THE DELAYED ACCESSORY DOES NOT TURN OFF

TEST CONDITIONS	TEST DETAILS/RESULTS/ACTIONS
J1 CHECK FOR DTCs	
1 2 SCIL Self-Test	• Is DTC B1566, U1198 or U1199 retrieved? → **Yes** GO to Section 417-02, Inspection and Verification to continue the diagnosis. → **No** GO to **J2**.
J2 CHECK PID P__DOOR	
1 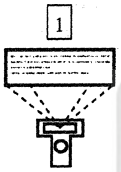 SCIL PID P__DOOR	2 Open and close the passenger door. • Does the PID P__DOOR change from CLOSED to AJAR when opened? → **Yes** GO to **J3**. → **No** GO to Section 417-02, Inspection and Verification to continue the diagnosis.

Official Licensed Product
Ford Motor Company

(Continued)

DIAGNOSIS AND TESTING (Continued)

PINPOINT TEST J: THE DELAYED ACCESSORY DOES NOT TURN OFF (Continued)

TEST CONDITIONS	TEST DETAILS/RESULTS/ACTIONS
J3 CHECK PID D__DR__DD	
1 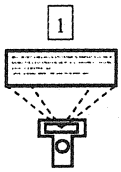 DDM PID D__DR__DD	2 Open and close the driver door. • Does the PID D__DR__DD change from CLOSED to AJAR when opened? → **Yes** GO to **J4**. → **No** GO to Section 417-02, Inspection and Verification to continue the diagnosis.
J4 CHECK THE ACCESSORY DELAY	
2 3 	1 Close both the doors. 4 Remove the key from the ignition. DO NOT open either door. Wait at least 10 minutes and press the LH window regulator control switch to the DOWN or UP position. • Does the LH power window operate? → **Yes** GO to **J5**. → **No** GO to **J8**.

Official Licensed Product Ford Motor Company

(Continued)

DIAGNOSIS AND TESTING (Continued)

PINPOINT TEST J: THE DELAYED ACCESSORY DOES NOT TURN OFF (Continued)

TEST CONDITIONS	TEST DETAILS/RESULTS/ACTIONS
J5 CHECK CIRCUIT 793 (BK/Y) FOR A SHORT TO GROUND	
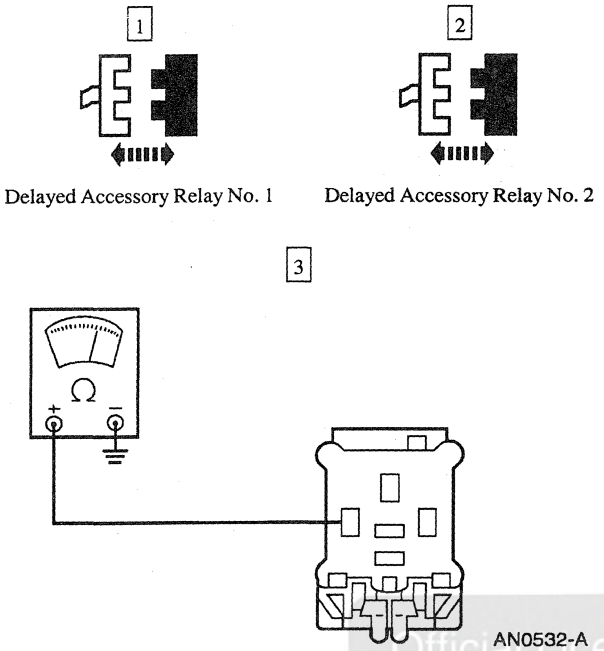	3 Measure the resistance between the delayed accessory relay No. 2 connector Pin C2001-86, Circuit 793 (BK/Y) and ground. • Is the resistance 10 K ohms or less? → **Yes** GO to **J6**. → **No** GO to **J7**.
J6 CHECK THE STEERING COLUMN/IGNITION/LIGHTING CONTROL MODULE	
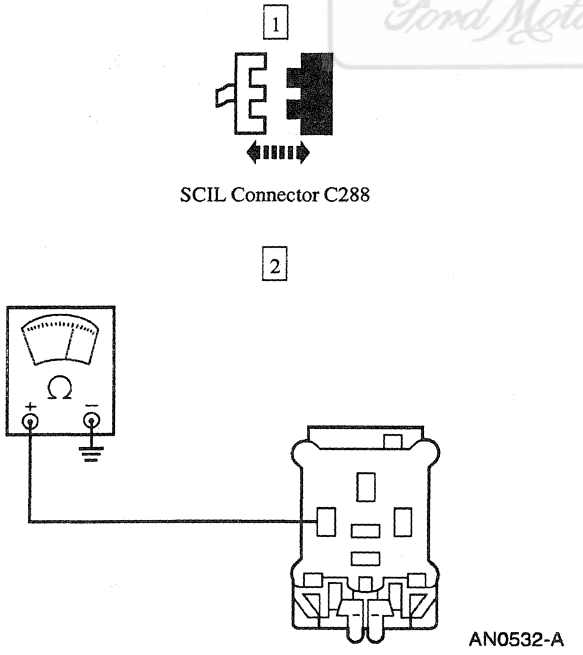	2 Measure the resistance between the delayed accessory relay No. 2 connector Pin C2001-86, Circuit 793 (BK/Y) and ground. • Is the resistance 10 K ohms or less? → **Yes** REPAIR Circuit 793 (BK/Y) for a short to ground. TEST the system for normal operation. → **No** REPLACE the steering column/ignition/lighting control module. TEST the system for normal operation.

Official Licensed Product Ford Motor Company

(Continued)

DIAGNOSIS AND TESTING (Continued)

PINPOINT TEST J: THE DELAYED ACCESSORY DOES NOT TURN OFF (Continued)

TEST CONDITIONS	TEST DETAILS/RESULTS/ACTIONS
J7 CHECK CIRCUIT 792 (T/Y) FOR A SHORT TO B+	
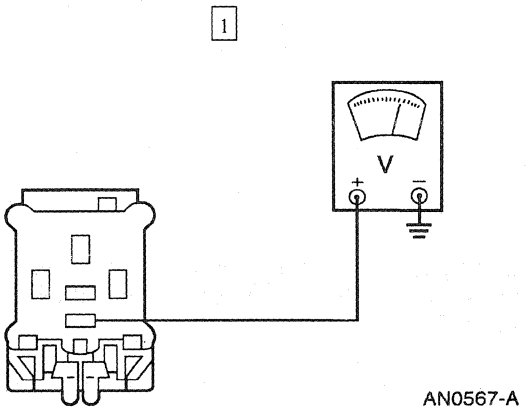	1 Measure the voltage at the delayed accessory relay No. 2 connector Pin C2001-87, Circuit 792 (T/Y). • Is the voltage reading B+? → **Yes** REPAIR Circuit 792 (T/Y) for a short to B+. TEST the system for normal operation. → **No** REPLACE the delayed accessory relay No. 2. TEST the system for normal operation.
J8 CHECK THE SLIDING ROOF PANEL OPERATION	
	1 Close both the doors. 4 Remove the key from the ignition. DO NOT open either door. Wait at least 10 minutes and press the sliding roof panel switch to the OPEN position. • Does the sliding roof panel operate? → **Yes** GO to **J9**. → **No** The system is working properly. Advise the customer on the proper operation and procedure.

Official Licensed Product Ford Motor Company

(Continued)

DIAGNOSIS AND TESTING (Continued)

PINPOINT TEST J: THE DELAYED ACCESSORY DOES NOT TURN OFF (Continued)

TEST CONDITIONS	TEST DETAILS/RESULTS/ACTIONS
J9 CHECK CIRCUIT 454 (R/LG) FOR A SHORT TO B+	
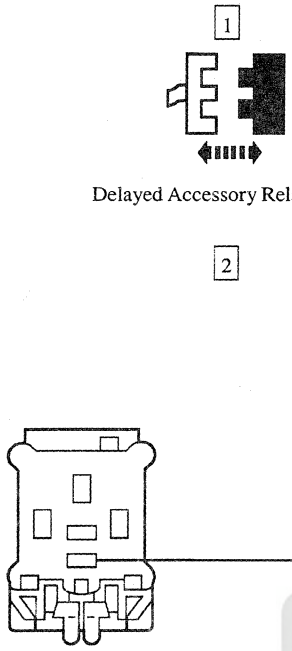	2 Measure the voltage at the delayed accessory relay No. 1 connector Pin C2000-87, Circuit 454 (R/LG). • Is the voltage reading B+? → **Yes** GO to **J10**. → **No** REPLACE the delayed accessory relay No. 1. TEST the system for normal operation.
J10 CHECK CIRCUIT 1002 (BK/PK) FOR A SHORT TO B+	
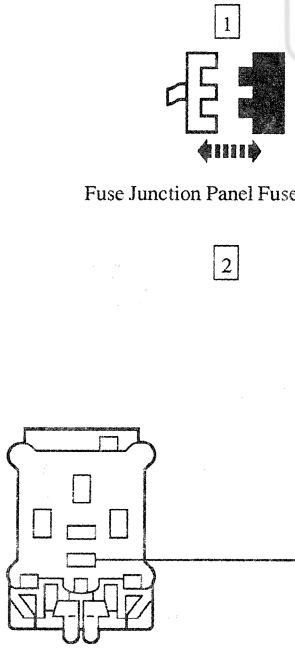	2 Measure the voltage at the delayed accessory relay No. 1 connector Pin C2000-87, Circuit 454 (R/LG). • Is the voltage reading B+? → **Yes** GO to **J11**. → **No** REPAIR Circuit 1002 (BK/PK) for a short to B+. TEST the system for normal operation.

Official Licensed Product
Ford Motor Company

(Continued)

DIAGNOSIS AND TESTING (Continued)

PINPOINT TEST J: THE DELAYED ACCESSORY DOES NOT TURN OFF (Continued)

TEST CONDITIONS	TEST DETAILS/RESULTS/ACTIONS
J11 CHECK CIRCUIT 950 (W/BK) FOR A SHORT TO B+	
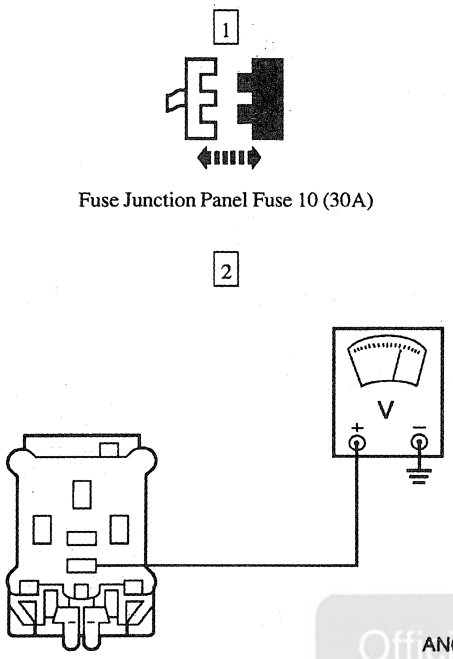	2 Measure the voltage at the delayed accessory relay No. 1 connector Pin C2000-87, Circuit 454 (R/LG). • Is the voltage reading B+? → **Yes** GO to **J12**. → **No** REPAIR Circuit 950 (W/BK) for a short to B+. TEST the system for normal operation.
J12 CHECK CIRCUIT 170 (R/LB) FOR A SHORT TO B+	
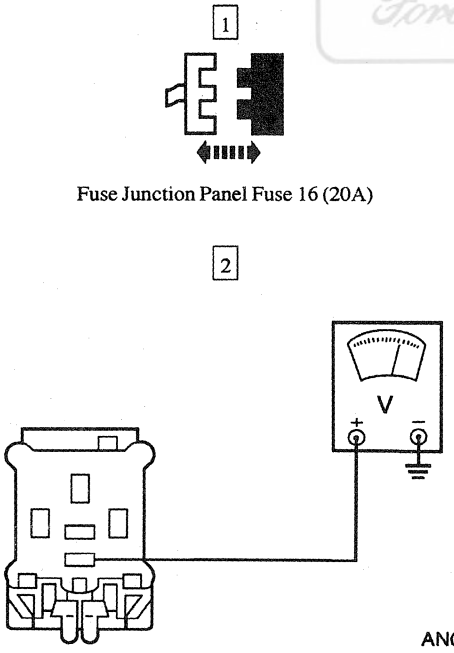	2 Measure the voltage at the delayed accessory relay No. 1 connector Pin C2000-87, Circuit 454 (R/LG). • Is the voltage reading B+? → **Yes** REPAIR Circuit 454 (R/LG) for a short to B+. TEST the system for normal operation. → **No** REPAIR Circuit 170 (R/LB) for a short to B+. TEST the system for normal operation.

Official Licensed Product
Ford Motor Company

DIAGNOSIS AND TESTING (Continued)

PINPOINT TEST K: THE DELAYED ACCESSORY DOES NOT OPERATE PROPERLY

TEST CONDITIONS	TEST DETAILS/RESULTS/ACTIONS
K1 CHECK FOR DTCs	
1 2 SCIL Self-Test	• Is DTC B1566, U1198 or U1199 retrieved? → **Yes** GO to Section 417-02, Inspection and Verification to continue the diagnosis. → **No** GO to **K2**.
K2 CHECK PID IGN__SCI	
1 SCIL PID IGN__SCI	2 Read PID IGN__SCI. 3 **NOTE:** When the ignition switch is turned to OFF the NGS will turn OFF as well. When reading this PID for the OFF position, OFF should be displayed for a brief moment before the NGS display turns OFF. Turn the ignition switch to OFF while monitoring the PID IGN__SCI. • Does the PID IGN__SCI read RUN with the ignition switch in the RUN and OFF with the ignition switch in OFF? → **Yes** GO to **K3**. → **No** GO to Section 501-12, Inspection and Verification to continue the diagnosis.

Official Licensed Product
Ford Motor Company

(Continued)

DIAGNOSIS AND TESTING (Continued)

PINPOINT TEST K: THE DELAYED ACCESSORY DOES NOT OPERATE PROPERLY (Continued)

TEST CONDITIONS	TEST DETAILS/RESULTS/ACTIONS
K3 CHECK PID P__DOOR	
1 2 SCIL PID P__DOOR	3 Open and close the passenger door. • Does the PID P__DOOR change from CLOSED to AJAR when opened? → **Yes** GO to **K4**. → **No** GO to Section 417-02, Inspection and Verification to continue the diagnosis.
K4 CHECK PID DD__DR__DD	
1 DDM PID DD__DR__DD	2 Open and close the driver door. • Does the PID DD__DR__DD change from CLOSED to AJAR when opened? → **Yes** GO to **K5**. → **No** GO to Section 417-02, Inspection and Verification to continue the diagnosis.

Official Licensed Product
Ford Motor Company

(Continued)

DIAGNOSIS AND TESTING (Continued)

PINPOINT TEST K: THE DELAYED ACCESSORY DOES NOT OPERATE PROPERLY (Continued)

TEST CONDITIONS	TEST DETAILS/RESULTS/ACTIONS
K5 CHECK THE POWER WINDOW OPERATION	
	1 Operate the LH window regulator control switch to the UP and DOWN position. • Do the windows operate? → **Yes** REPLACE the steering column/ignition/lighting control module. TEST the system for normal operation. → **No** GO to Pinpoint Test C.

Component Tests

Switch—Heated Back Window

1. Ground Pin 4 and connect a jumper wire between Pins 2 and 3.
2. Apply power to Pin 2. The indicator should not light.
3. Apply power to Pin 5. The heated back window symbol on the heated back window switch and light should light up.
4. Momentarily turn heated back window switch and light to the ON position. The indicator should come on and stay on after heated back window switch and light returns to the normal position. The indicator should go off under any one or more of the following conditions:
   - if heated back window switch and light is moved to the OFF position.
   - jumper wire between Pins 3 and 2 is removed.
   - approximately 10 minutes have elapsed.

Grid Wire Test

1. Using a bright lamp inside the vehicle, inspect the wire grid from the outside. A broken grid wire will appear as a brown spot.
2. Run the engine at idle. Set the heated back window switch and light to ON. The indicator light should come on.
3. Working inside the vehicle with a voltmeter contact the broad red-brown stripes of the back glass window positive lead to battery side and negative lead to ground side. The meter should read 10-13 volts. A lower voltage reading indicates a loose ground connection.
4. Contact a good ground point with the negative lead of the meter. The voltage reading should not change.
5. With the negative lead of the meter grounded, touch each grid line of the heated back window glass (42006) at its midpoint with the positive lead. A reading of approximately 6 volts indicates that the line is good. A reading of zero volts indicates that the line is broken between the midpoint and the B+ side of the grid line. A reading of 12 volts indicates that the circuit is broken between the midpoint of the grid line and ground.

Official Licensed Ford Motor Company

REMOVAL AND INSTALLATION

Switch — Heated Back Window

Removal

1. Disconnect the negative and positive battery cable.

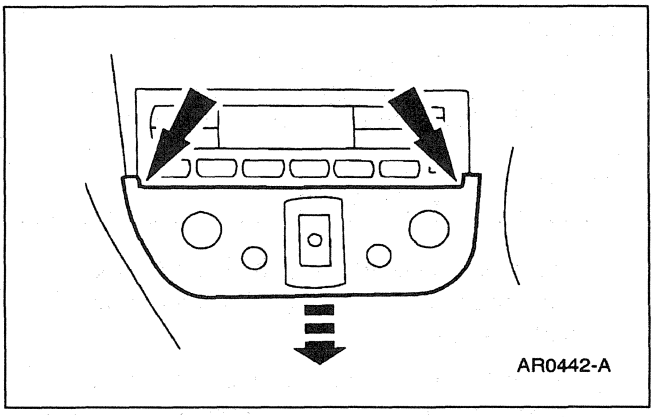

2. ⚠ **CAUTION: Do not pry on the outside edge of the instrument panel cover (046A34) with a screwdriver or similar tool to remove the instrument panel cover . Damage to the lower center instrument panel finish panel assembly will result.**

   Pull at each inside corner of the top of the instrument panel cover with a small allen wrench to release the upper clips.

3. Pull the instrument panel cover straight out to release it from the lower clip.

Official Licensed Product
Ford Motor Company

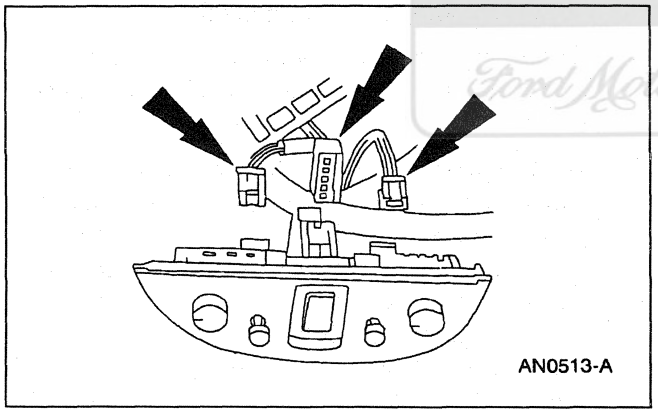

4. Disconnect the wiring harness from the heated seat switches and the heated back window switch and light (18C621) .

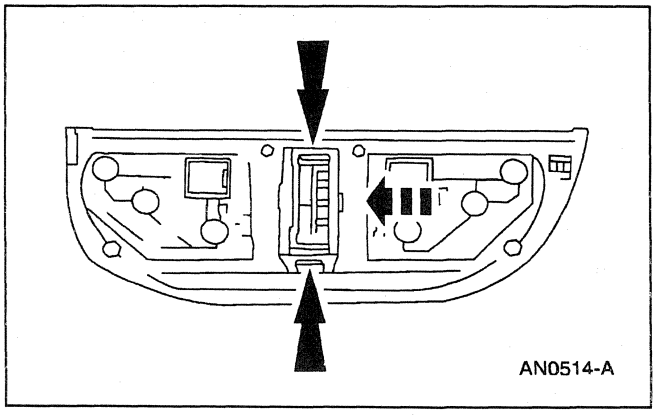

5. Depress the locking tabs and remove the heated back window switch and light.

REMOVAL AND INSTALLATION (Continued)

Installation

1. Follow the removal procedure in reverse order.

Switch — Window Regulator Control

Removal

1. Remove the front door trim panel (23942); refer to Section 501-05.
2. Release the retaining clips on the window regulator switch housing (14527) with a small screwdriver and remove the window regulator control switch (14529).

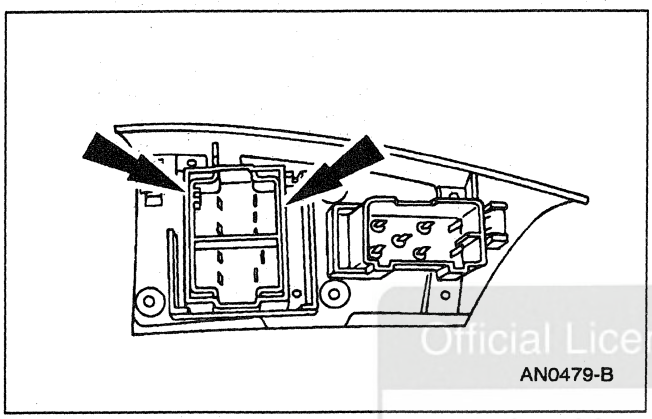
AN0479-B

Official Licensed Product
Ford Motor Company

Installation

1. Follow the removal procedure in reverse order.

Window Glass — Door

Special Tool(s)

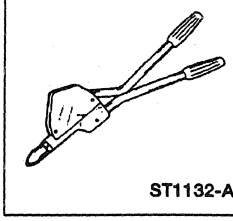 ST1132-A	Heavy Duty Riveter 501-D011 (D80L-23200-A) or equivalent

Removal

1. Remove the front door trim panel (23942) and front door trim shield (237A04) ; refer to Section 501-05.

REMOVAL AND INSTALLATION (Continued)

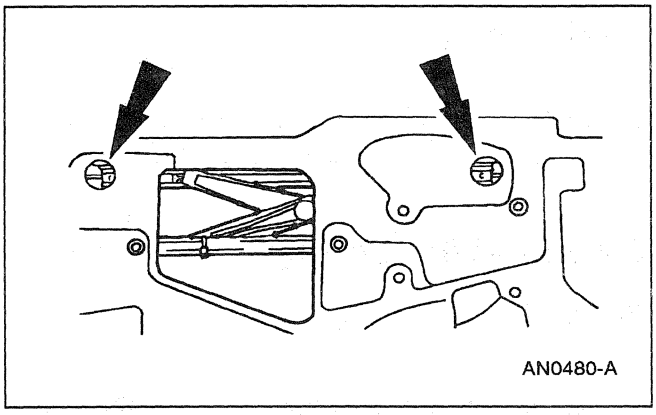

2. **NOTE:** The front door window glass (21410) must be positioned to access the rivets through the inner door panel.

   Remove two front door window glass retaining rivets from the front door window channel bracket (23288).

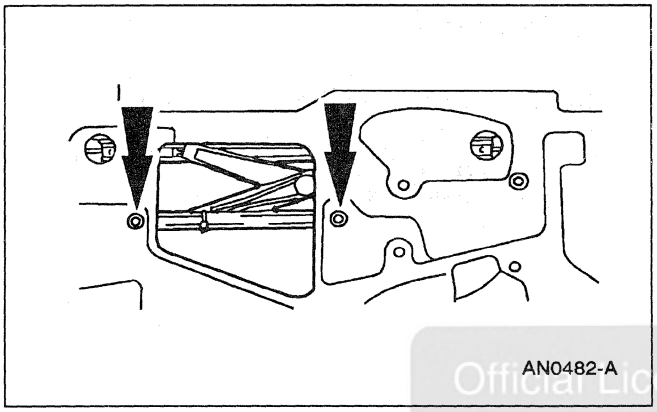

3. Loosen the door window glass inner stabilizer retaining nut and washer.

Official Licensed Product
Ford Motor Company

4. Remove the front door window glass.

Installation

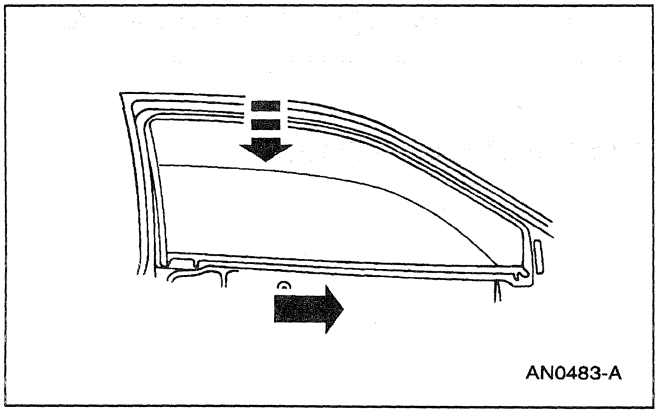

1. Install the front door window glass into the front door glass run front retainer (21572) and the front door glass run latch side retainer (222A00).

REMOVAL AND INSTALLATION (Continued)

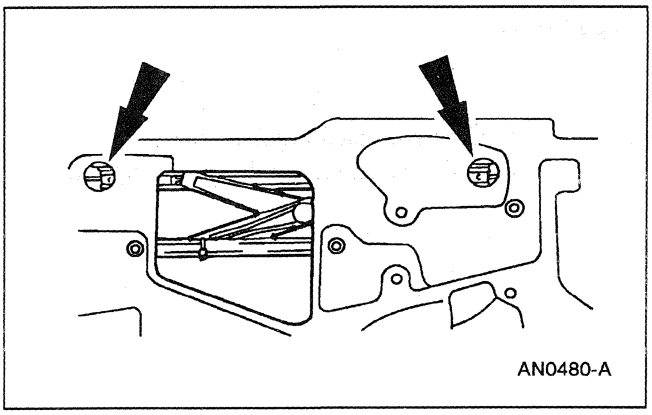

2. Install rivets securing the front door window glass to the front door window channel bracket.

3. Partially raise and adjust the front door window glass.

4. Install the front door trim shield and the front door trim panel ; refer to Section 501-05.

Window Glass — Rear Quarter

Official Licensed Product
Ford Motor Company

Removal

1. Remove the moulding (29700); refer to Section 501-05.

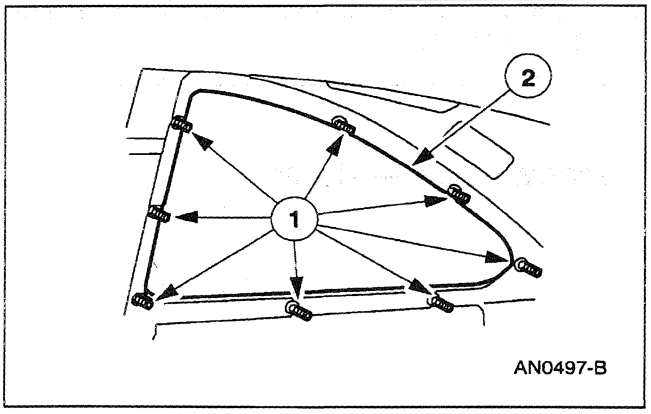

2. Remove the quarter window glass (29710).
   1 Remove the retaining nuts.
   2 Remove the quarter window glass.

3. Remove all the foam core butyl from the window flange and the quarter window glass if window is to be reused.

REMOVAL AND INSTALLATION (Continued)

Installation

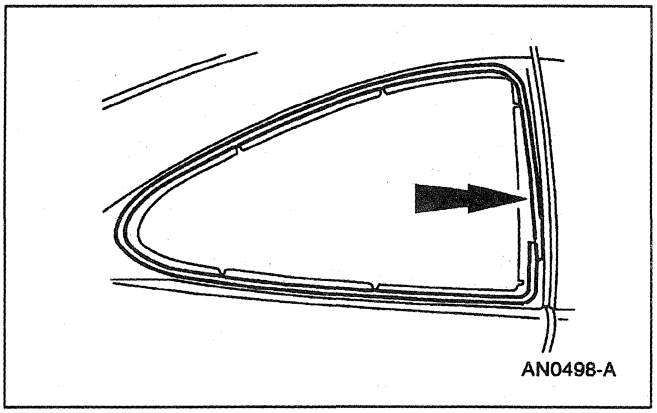

1. Remove the paper backing from the butyl seal on the inside of the quarter window glass opening.

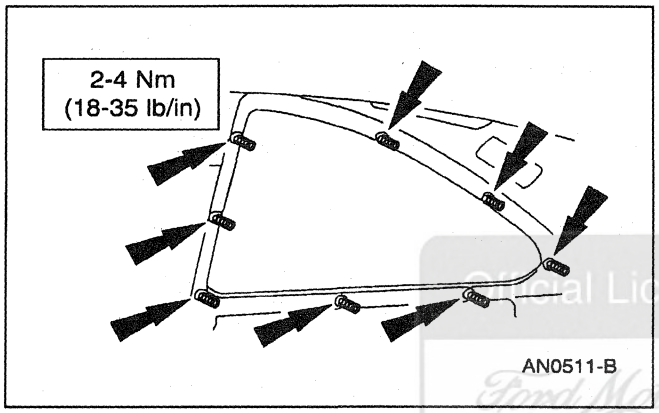

2. Install the quarter window glass and the retaining nuts.

Official Licensed Product
Ford Motor Company

3. Install the rear quarter window moulding; refer to Section 501-08.

Window Glass — Back

Special Tool(s)

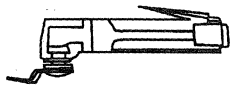 ST1109-A	Rotunda Pneumatic Knife with Off-Set Blade 107-R1511 or equivalent
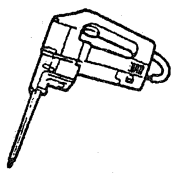 ST1320-A	Rotunda Interior Auto Glass Cut-Out Knife Kit 164-R2450 or equivalent

REMOVAL AND INSTALLATION (Continued)

Removal

1. **WARNING: SAFETY GLASSES AND GLOVES MUST BE WORN TO PREVENT PERSONAL INJURY.**

   Remove the high mount stop lamp assembly; refer to Section 417-01.

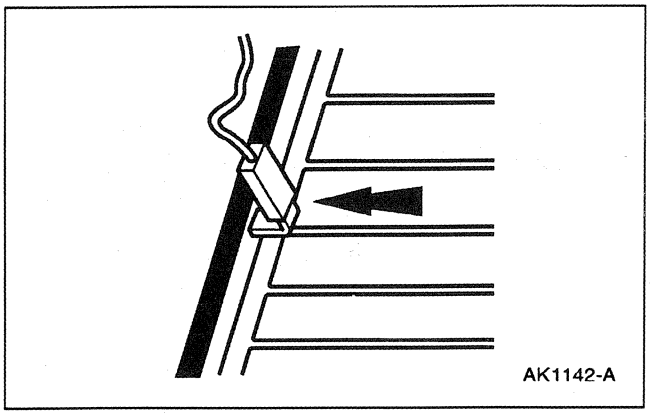

2. Disconnect the right and left side rear window defroster connectors.

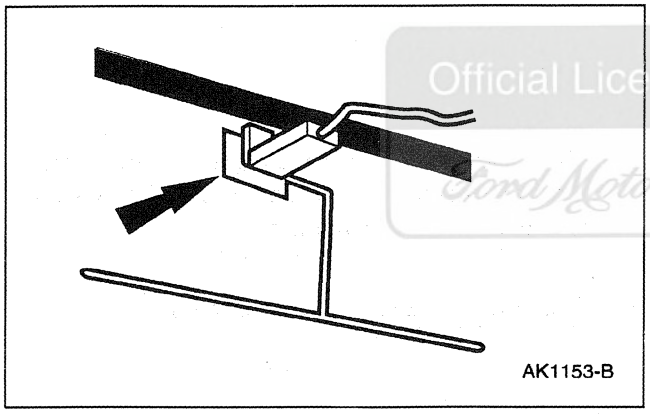

Official Licensed Product
Ford Motor Company

3. Disconnect the radio antenna lead in cable connection at the top of the back window glass (42006).

4. Disconnect the mobile telephone transceiver antenna cable (if equipped).

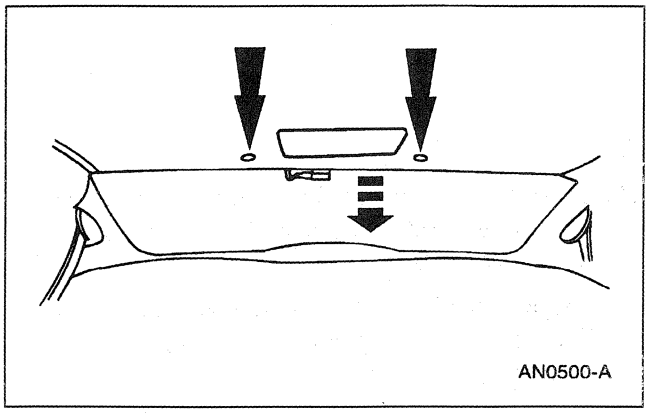

5. Remove the rear headliner retainers, lower and support the headliner.

REMOVAL AND INSTALLATION (Continued)

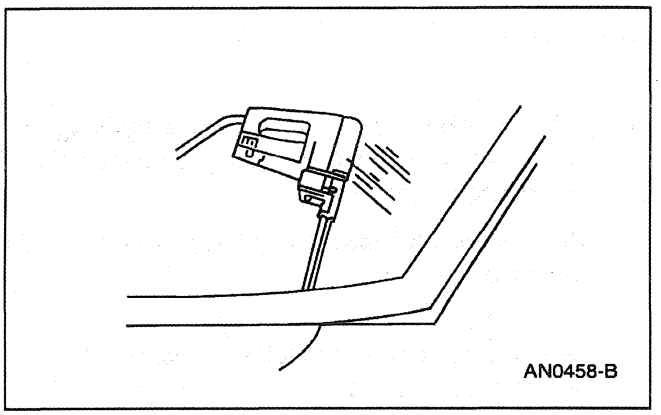

6. ⚠ **CAUTION: Use care to avoid damage to the rear package tray cover.**

   Cut the back window glass urethane using the Rotunda Pneumatic Knife with Offset Blade and the Rotunda Interior Auto Glass Cut-Out Knife. Follow the manufacturers instructions when using the tools.

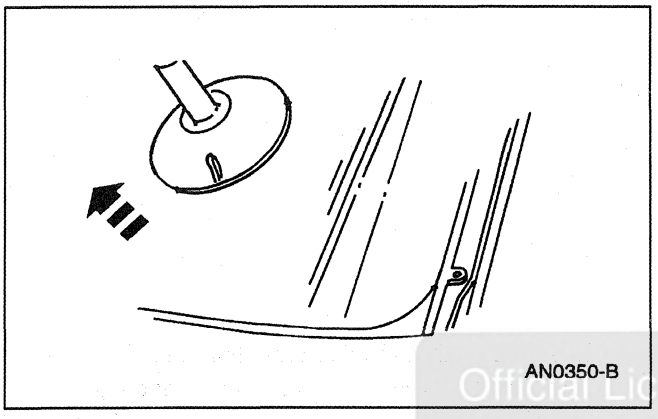

7. Remove the back window glass.

Official Licensed Product
Ford Motor Company

8. Clean around the pinch weld area to remove any dirt or debris that could contaminate the existing urethane once it is trimmed.

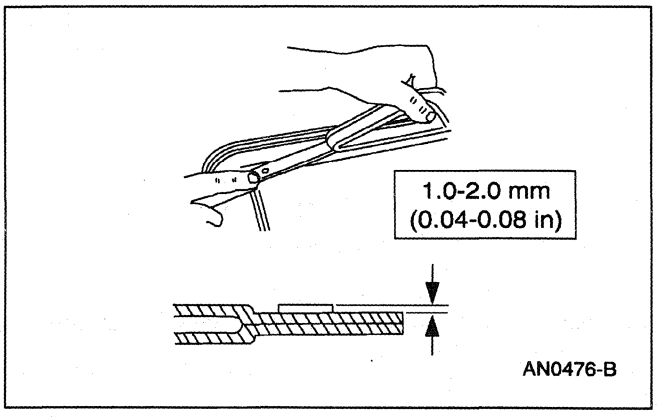

9. Trim the urethane on the pinch weld.

10. **NOTE:** To avoid rust formation, take extreme care not to scratch or otherwise damage the pinch weld with tools.

    Inspect the pinch weld for damaged metal, rust or foreign objects. Repair the pinch weld as necessary.

REMOVAL AND INSTALLATION (Continued)

Installation

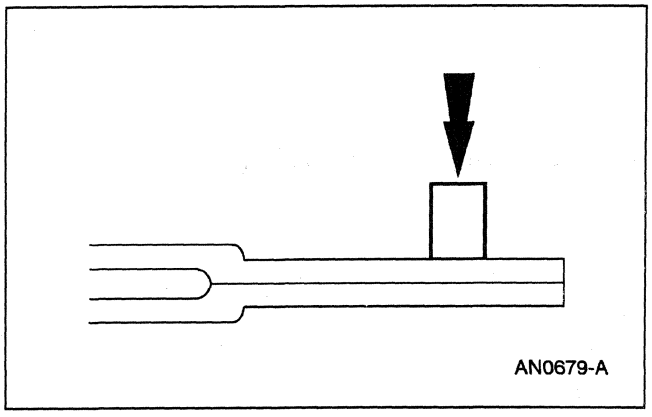

1. **NOTE:** A minimum of 10 minutes is required for the primer surface to dry.

   Apply Urethane Rubber Primer meeting Ford specification WSB-M2G234-C to any exposed or damaged metal on the pinch weld.

2. Apply Foam Tape or equivalent along the bottom pinch weld.

Official Licensed Product
Ford Motor Company

3. **NOTE:** Place the back window glass inside up on a low stable work surface.

   Clean the back window glass with a non-alcohol based glass cleaner.

4. **NOTE:** Wipe off the Urethane Glass Prep or equivalent meeting Ford specification WSB-M5B280-C2 immediately after application because it flash dries. Two coats of the Urethane Glass Prep must be applied.

   NOTE: Use a clean wool applicator to apply Urethane Glass Prep or equivalent meeting Ford specification WSB-M5B280-C2.

   Apply Urethane Glass Prep or equivalent meeting Ford specification WSB-M5B280-C2 on the back window glass inside edges.

   1 Apply Urethane Glass Prep or equivalent meeting Ford specification WSB-M5B280-C2 on back window glass inside edges.

   2 Wipe the back window glass where Urethane Glass Prep or equivalent has been applied.

   3 Apply Urethane Glass Prep or equivalent meeting Ford specification WSB-M5B280-C2 on the back window glass inside edges.

REMOVAL AND INSTALLATION (Continued)

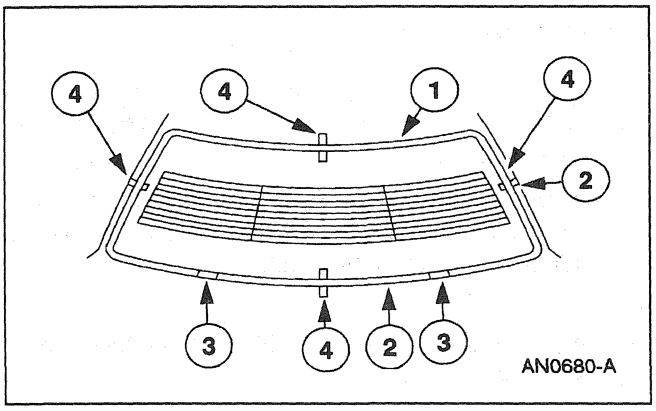

5. Align the back window glass to the body.
   1 Place the back window glass on the pinch weld.
   2 Center the back window glass in the opening.
   3 Adjust the lower glass stops.
   4 Mark the back window glass alignment on the glass and the body.

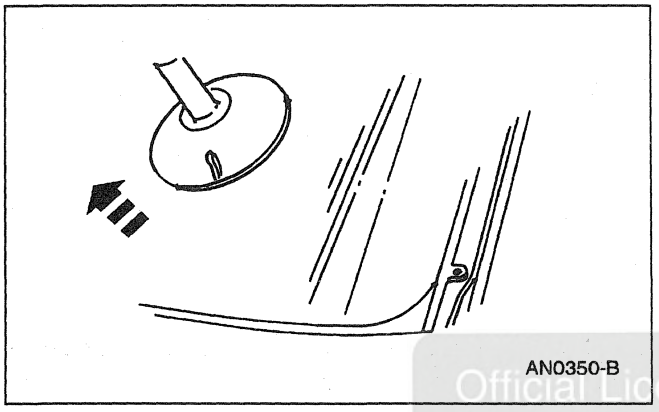

6. Remove the back window glass.

Official Licensed Product
Ford Motor Company

7. **NOTE:** Urethane Glass Cleaner or equivalent meeting Ford specification WSB-M2G314-B must be thoroughly mixed for even pigmentation.

   NOTE: Urethane Glass Cleaner or equivalent meeting Ford specification WSB-M2G314-B must cure for a minimum of five minutes before back window glass installation.

   Apply Urethane Glass Cleaner or equivalent meeting Ford specification WSB-M2G314-B to the inside edges of the back window glass.

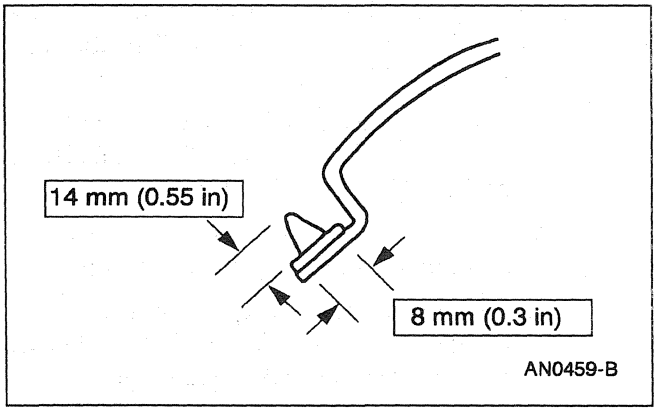

8. **NOTE:** The back window glass must be installed before urethane skins over.

   Apply new Urethane Adhesive meeting Ford specification WSB-M2G316-B in an even bead directly onto the existing urethane on the pinch weld.

   The bead should be triangular in shape.

REMOVAL AND INSTALLATION (Continued)

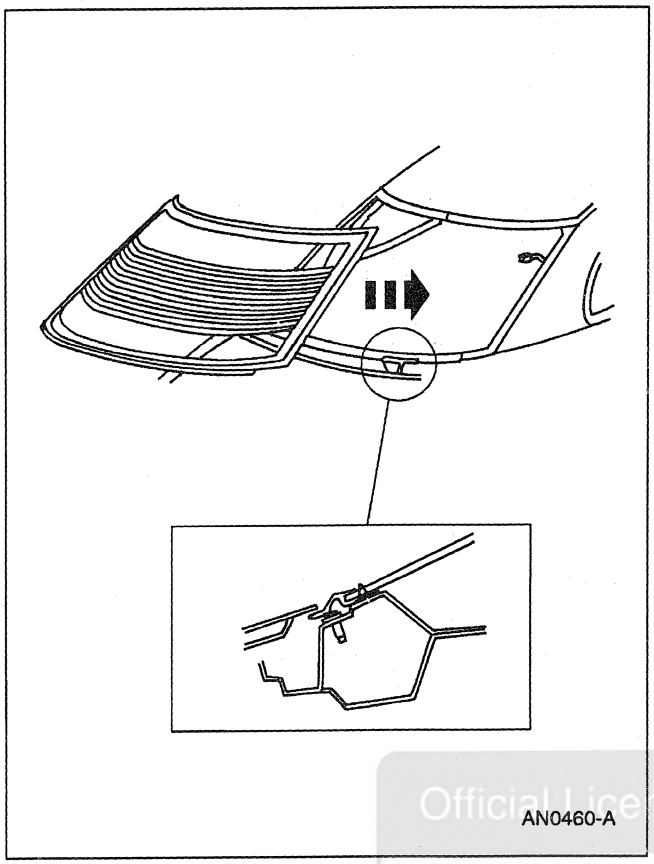

9. **NOTE:** Leave a door window slightly open until Urethane Adhesive meeting Ford specification WSB-M2G316-B has cured.

   Install the back window glass on the pinch weld. Align the back window glass to the body using the alignment marks made previously.

Official Licensed Product
Ford Motor Company

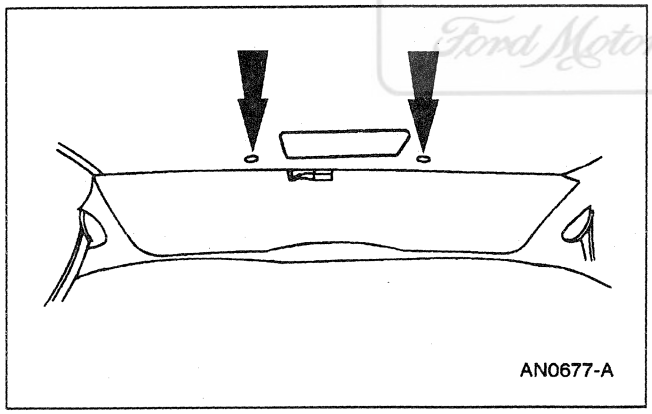

10. Install the rear headliner retainers.

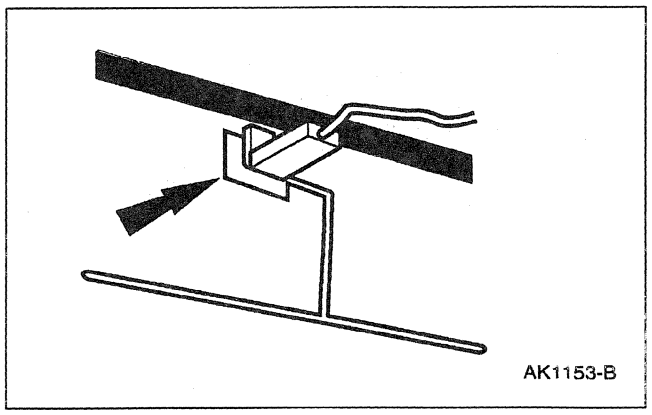

11. Connect the radio antenna lead in cable at the top of the back window glass.

REMOVAL AND INSTALLATION (Continued)

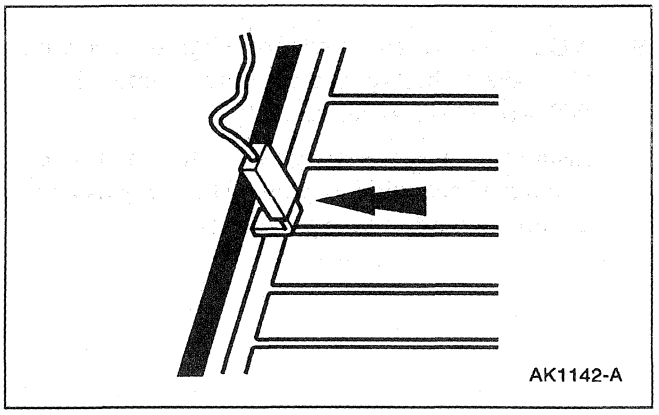

12. Connect the right and left side rear window defroster connectors.

13. Connect the mobile telephone transceiver antenna cable (if equipped).

14. Inspect the back window glass for air or water leaks through the urethane seal.

Window Regulator — Power

Official Licensed Product
Ford Motor Company

Special Tool(s)

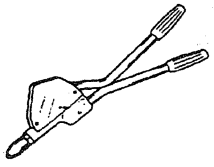 ST1132-A	Heavy Duty Riveter 501-D011 (D80L-23200-A) or equivalent

Removal

1. Remove the front door trim panel (23942) and the front door trim shield (237A04) ; refer to Section 501-05.

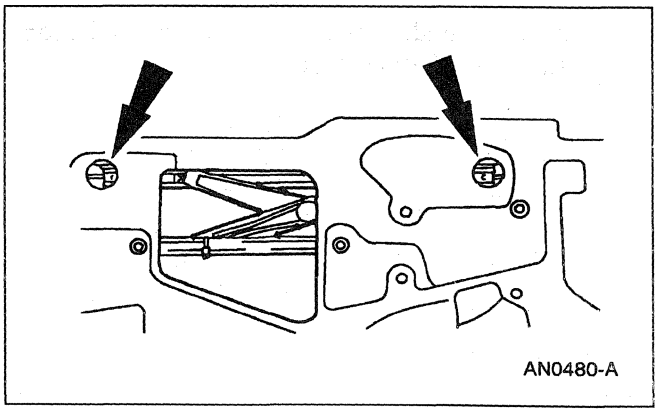

2. **NOTE:** The front door window glass (21410) must be positioned to access the rivets through the inner door panel.

   Remove two front door window glass retaining rivets from the front door window channel bracket (23288).

REMOVAL AND INSTALLATION (Continued)

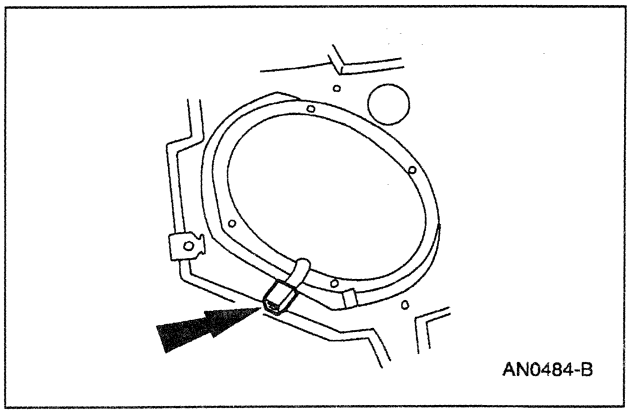

3. Disconnect the window regulator electric drive (23394) from the wiring harness.

4. Secure the front door window glass in the full up position.

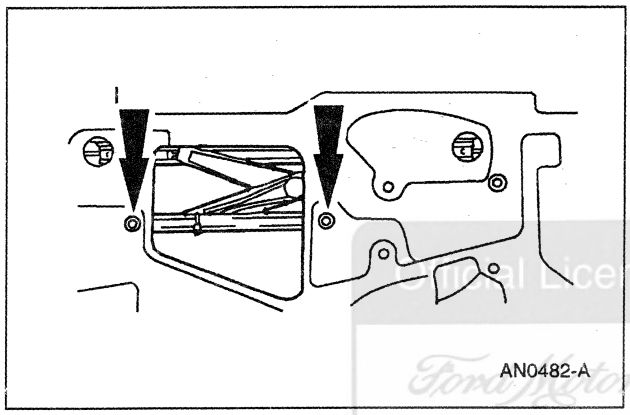

5. Remove two retaining nuts and washers from the window regulator equalizer arm bracket (23230).

Ford Motor Company

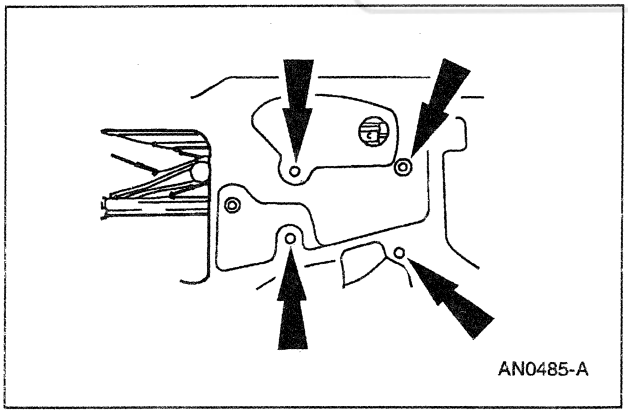

6. Remove the front door window regulator rivets.

REMOVAL AND INSTALLATION (Continued)

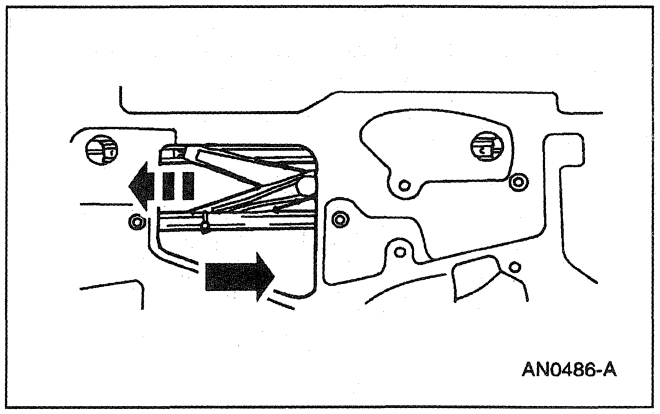

7. Remove the front door window regulator (23200).

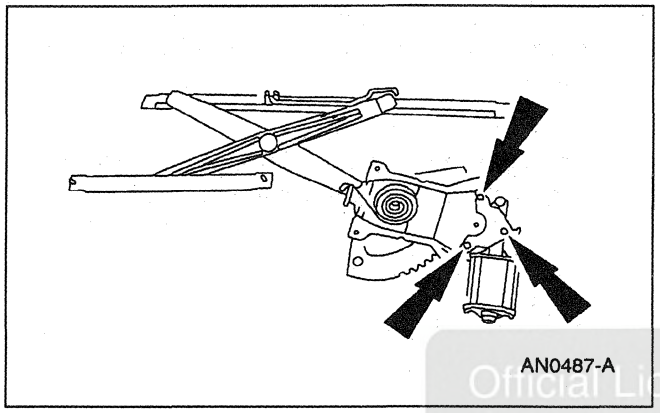

8. **WARNING: MAKE SURE THAT THE FRONT DOOR POWER REGULATOR ARMS ARE CLAMPED OR LOCKED DOWN IN A FIXED POSITION PRIOR TO REMOVING THE WINDOW REGULATOR ELECTRIC DRIVE TO PREVENT POSSIBLE PERSONAL INJURY DURING COUNTERBALANCE SPRING UNWIND.**

   Remove the window regulator electric drive.

Official Licensed Product
Ford Motor Company

Installation

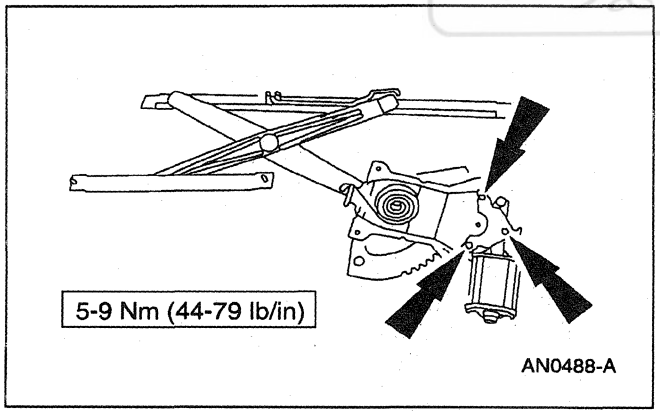

1. Install the window regulator electric drive.

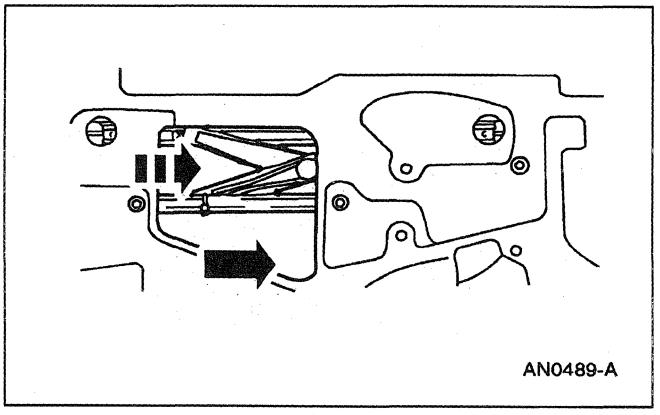

2. **NOTE:** The front door window glass must be secured in the full up position.

   Install the front door window regulator .

REMOVAL AND INSTALLATION (Continued)

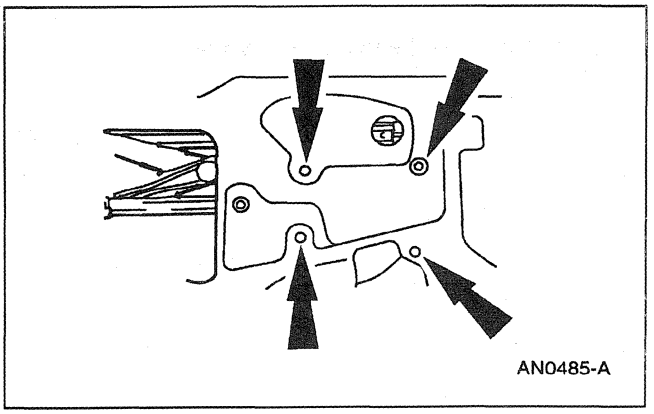

3. Install the rivets.

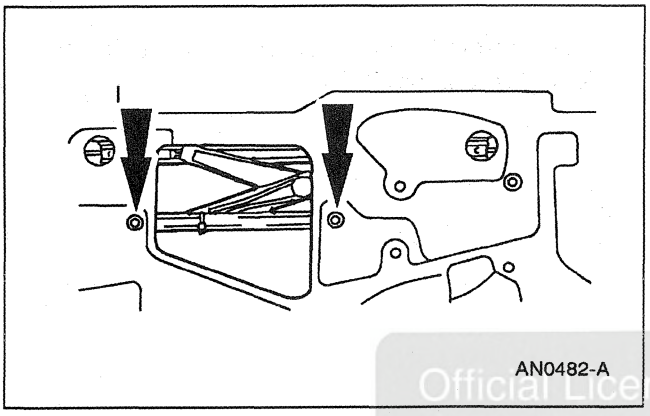

4. Install the window regulator equalizer arm bracket to the front door window regulator and loosely install the retaining nuts and washers.

Official Licensed Product
Ford Motor Company

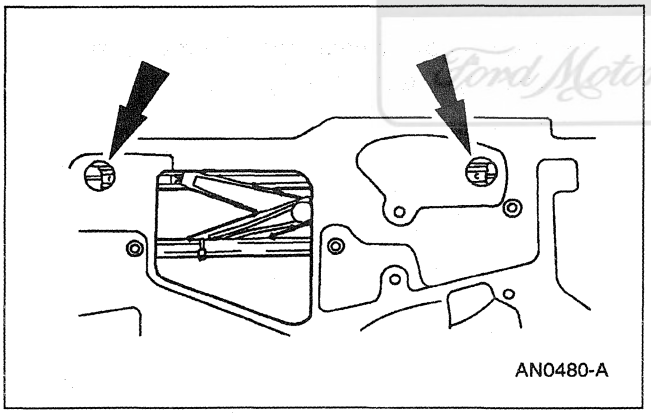

5. Install the rivets securing the front door window glass to the front door window channel bracket .

6. Connect the window regulator electric drive to the door wiring harness.

REMOVAL AND INSTALLATION (Continued)

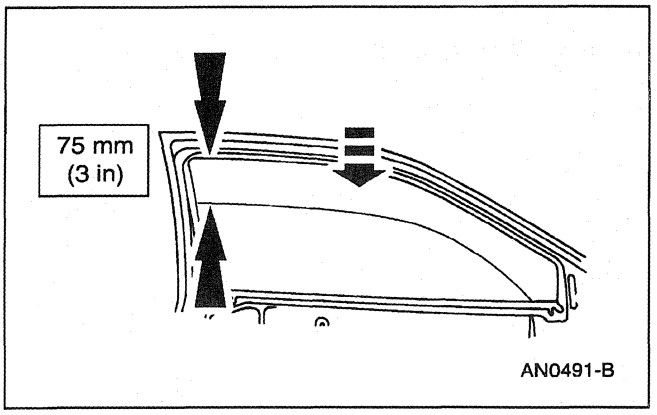

7. Partially lower the front door window glass .

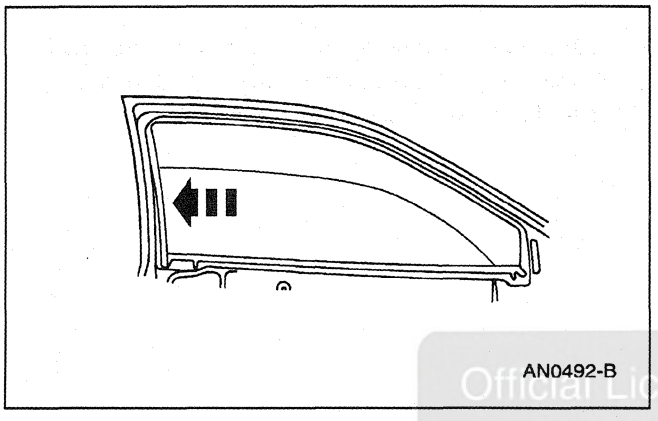

8. Seat the front door window glass into the front door glass top run (21596) .

Official Licensed Product
Ford Motor Company

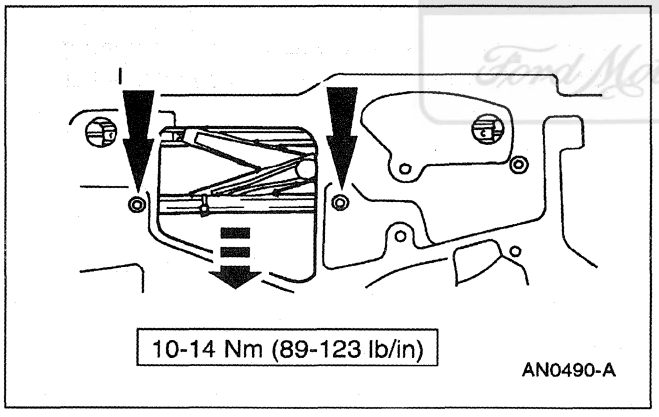

9. Push the window regulator equalizer arm bracket down and tighten the nuts.

10. Cycle the window regulator electric drive fully to verify normal operation.

11. Install the front door trim shield and the front door trim panel ; refer to Section 501-05.

REMOVAL AND INSTALLATION (Continued)

Door Glass Run Retainer

Removal

1. Remove the front door trim panel (23942) and the front door trim shield (237A04) ; refer to Section 501-05.

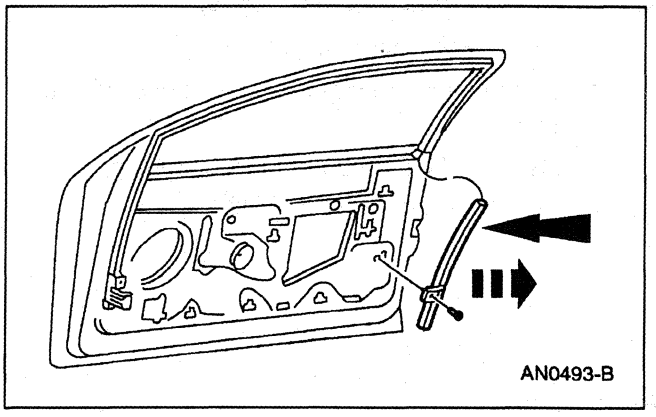

2. **NOTE:** The front door window glass (21410) must be in the full up position. Use care to prevent pinching the front door glass hinge side run (21546).

   Remove the front door glass run latch side retainer (222A00).

Installation

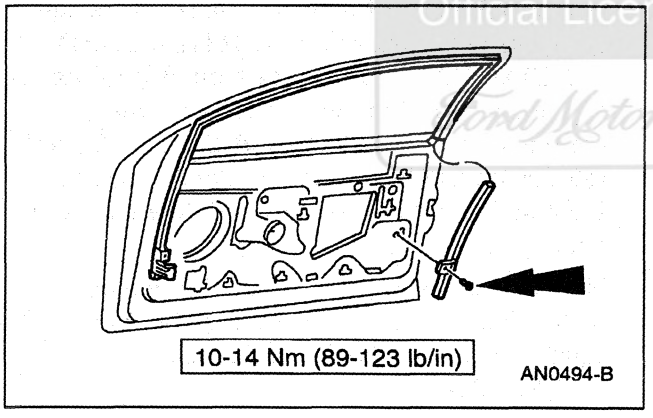

1. Follow the removal procedure in reverse order.

Official Licensed Product
Ford Motor Company

Door Glass Top Run

Removal

1. ⚠ **CAUTION: Removal of the front door glass top run (21596) is recommended only if damage to the front door glass top run has occurred.**

   Remove the rear view mirror mounting hole cover (17K709); refer to Section 501-09.

REMOVAL AND INSTALLATION (Continued)

2. Remove the front door belt line outside weatherstrip (21452) and the front door belt line inside weatherstrip (21456).

3. Remove the outside rear view mirror (17682); refer to Section 501-09.

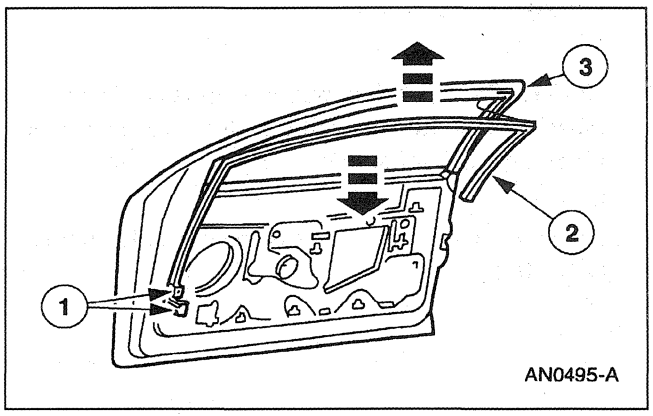

4. Remove the front door glass top run.
   1 Remove the retaining bolts.
   2 Pull the front door glass top run down off the pinch weld.
   3 Remove the front door glass top run up through the window opening.

Installation

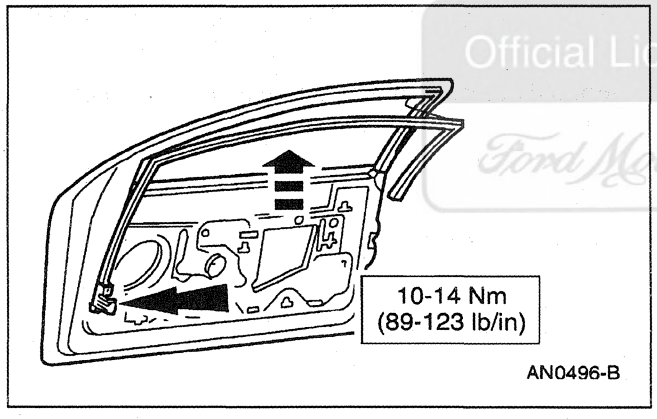

1. **CAUTION: Installation of the front door glass top run requires very CRITICAL AND SPECIAL HANDLING. The front door glass top run must be handled from the center section only, DO NOT HANDLE THE FRONT OR REAR LEGS. Use care not to damage the front or rear corners of the front door glass top run.**

   NOTE: Lubricate the front door glass top run with Silicone Lubricant C0AZ-19553-AA or equivalent meeting Ford specification ESR-M13P4-A.

   NOTE: Installation of the front door glass top run requires two people, one inserting the front leg of the front door glass top run and one holding the front door glass top run at the center section to prevent bending.

   Follow the removal procedure in reverse order.

Official Licensed Product
Ford Motor Company

REMOVAL AND INSTALLATION (Continued)

Special Tool(s)

	Moulding Tool RH 501-001 (T64P-42006-B)
	Moulding Tool LH 501-002 (T64P-42006-C)

(Continued)

Windshield Glass

Special Tool(s)

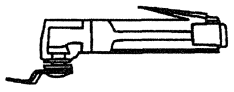 ST1109-A	Rotunda Pneumatic Knife with Off-Set Blade 107-R1511 or equivalent
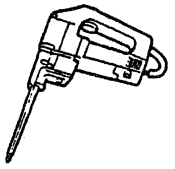 ST1320-A	Rotunda Interior Auto Glass Cut-Out Knife Kit 164-R2450 or equivalent

Removal

1. **WARNING: SAFETY GLASSES AND GLOVES MUST BE WORN TO PREVENT PERSONAL INJURY.**

   Remove the cowl top extension (021A36); refer to Section 501-02.

2. Remove the windshield glass stops.

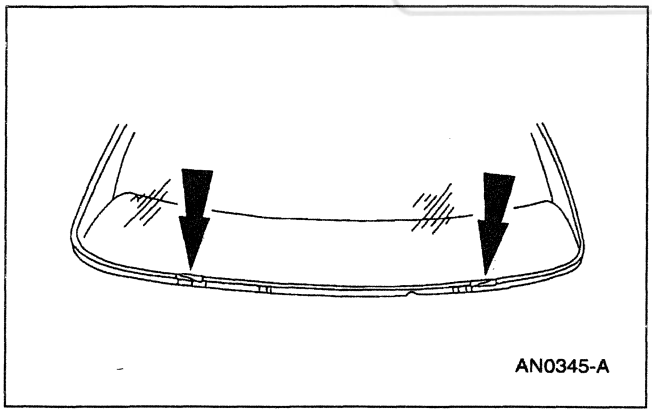

Official Licensed Part
Ford Motor Company

REMOVAL AND INSTALLATION (Continued)

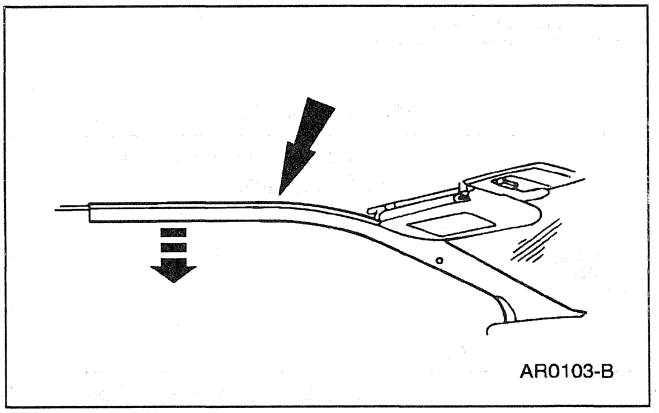

3. Remove the roof side inner front mouldings (51752).

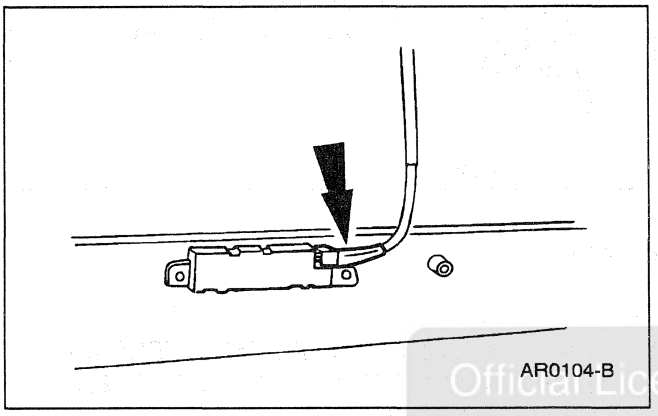

4. Disconnect the cellular phone microphone connector, if equipped.

Official Licensed Product
Ford Motor Company

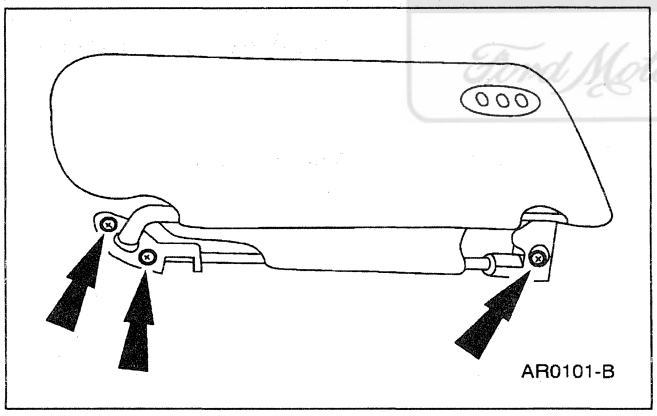

5. Remove the screws.

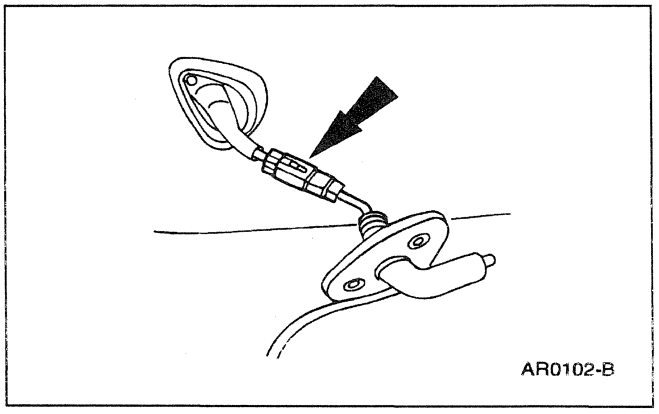

6. Disconnect the vanity mirror lamp connectors.

REMOVAL AND INSTALLATION (Continued)

7. Lower the headliner near the windshield opening. Place a block of suitable material between the headliner and the roof to maintain clearance.

8. Remove the windshield rear view mirror; refer to Section 501-09.

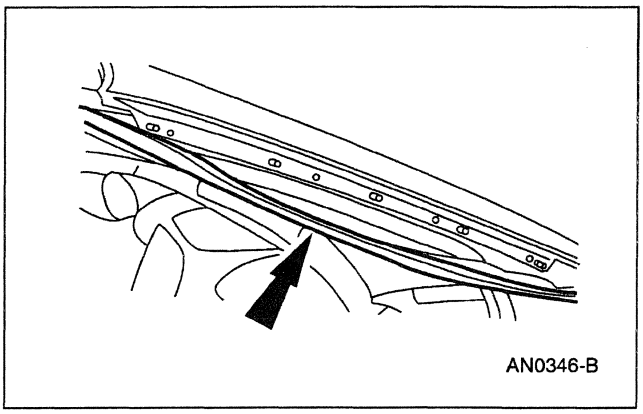

9. Partially remove the door drip rail mouldings.

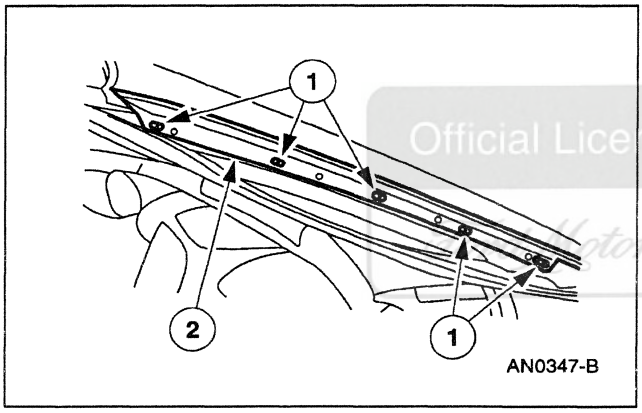

10. Remove the windshield moulding retainers.
    1 Drill out the rivets.
    2 Remove the windshield moulding retainers.

Official Licensed Product
Motor Company

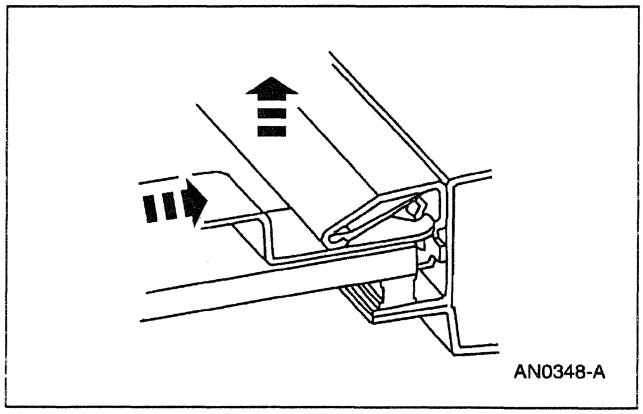

11. Remove the windshield outside moulding (03144) using the LH and RH moulding tools.

REMOVAL AND INSTALLATION (Continued)

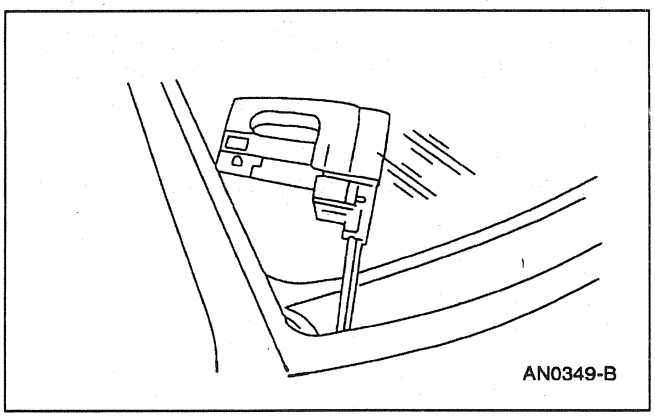

12. ⚠ **CAUTION: Use care to avoid damage to the instrument panel (04320).**

    Cut the windshield urethane using the Rotunda Pneumatic Knife with Off-set Blade and Rotunda Interior Auto Glass Cut-Out Knife. Follow the manufacturer's instructions when using the tools.

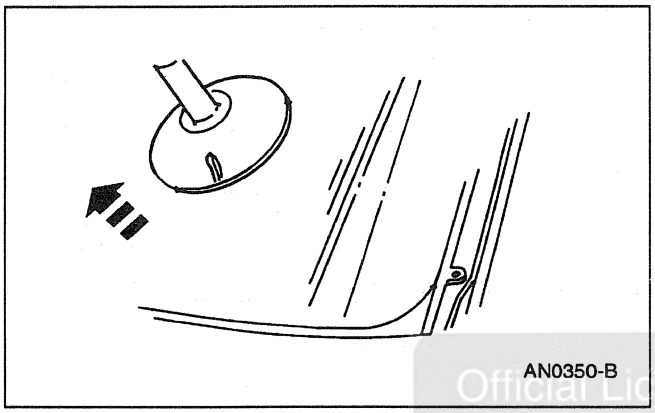

13. Remove the windshield glass (03100).

Official Licensed Product
Ford Motor Company

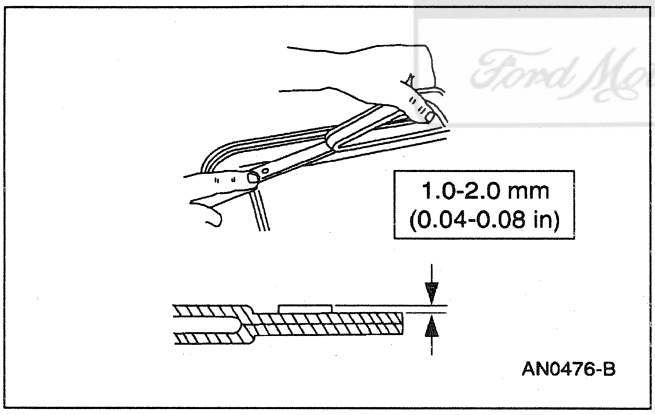

14. Trim the urethane on the pinch weld.

15. Inspect the pinch weld for damaged metal, rust or foreign objects. Service the pinch weld as necessary.

Installation

1. **NOTE:** A minimum of 10 minutes is required for the primer surface to dry.

   Apply Urethane Rubber Primer or equivalent meeting Ford specification WSB-M2G234-C to any exposed or damaged metal on the pinch weld.

REMOVAL AND INSTALLATION (Continued)

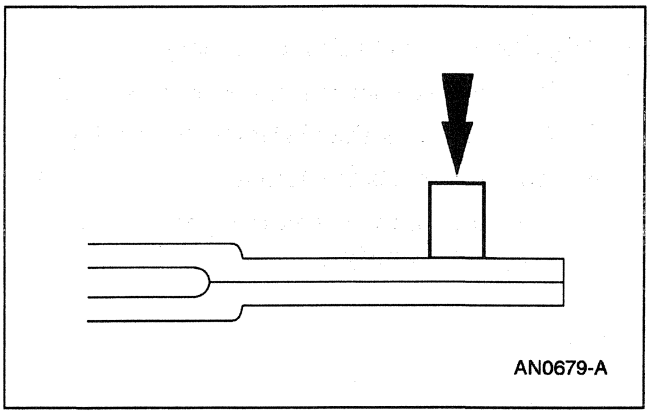

2. Apply Foam Tape or equivalent along the top edge of the cowl pinch weld.

3. **NOTE:** Place the windshield glass inside up on a low stable work surface.

   Clean the windshield glass with a non-alcohol based glass cleaner.

4. **NOTE:** Wipe off the Urethane Glass Prep or equivalent meeting Ford Specification WSB-M5B280-C2 immediately after application because it flash dries. Two coats of the Urethane Glass Prep must be applied.

   NOTE: Use a clean wool applicator to apply Urethane Glass Prep or equivalent meeting Ford specification WSB-M5B280-C2.

   Apply Urethane Glass Prep or equivalent meeting Ford specification WSB-M5B280-C2 on the windshield glass inside edges.

   1 Apply Urethane Glass Prep or equivalent meeting Ford specification WSB-M5B280-C2 on the windshield glass inside edges.

   2 Wipe the windshield glass where Urethane Glass Prep or equivalent has been applied.

   3 Apply Urethane Glass Prep or equivalent meeting Ford specification WSB-M5B280-C2 on the windshield glass inside edges.

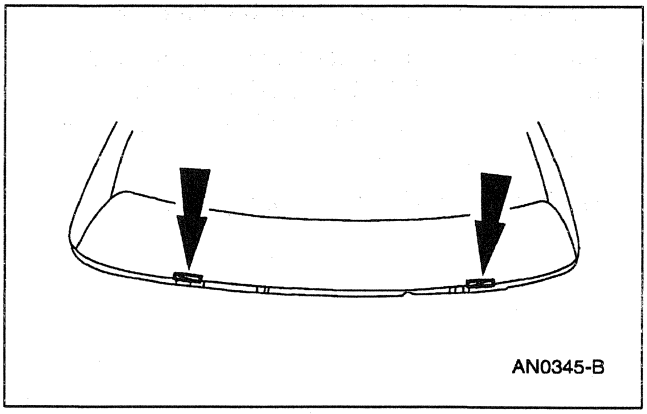

5. Install the windshield stops.

Official Licensed Product
Ford Motor Company

REMOVAL AND INSTALLATION (Continued)

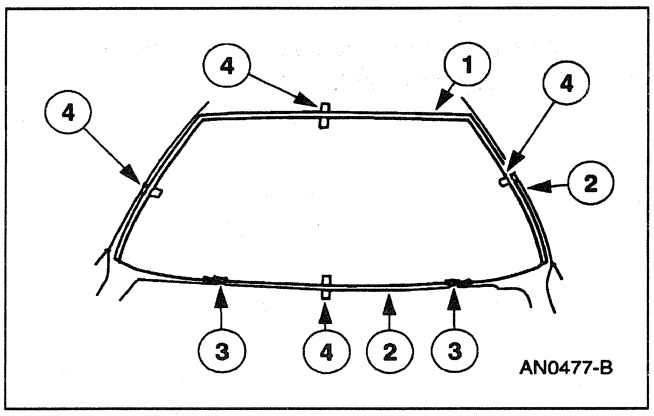

6. Align the windshield glass to the body.
   1 Place the windshield glass on the pinch weld.
   2 Center the windshield glass in the opening.
   3 Adjust the windshield stops.
   4 Mark the windshield glass alignment on the glass and the body.

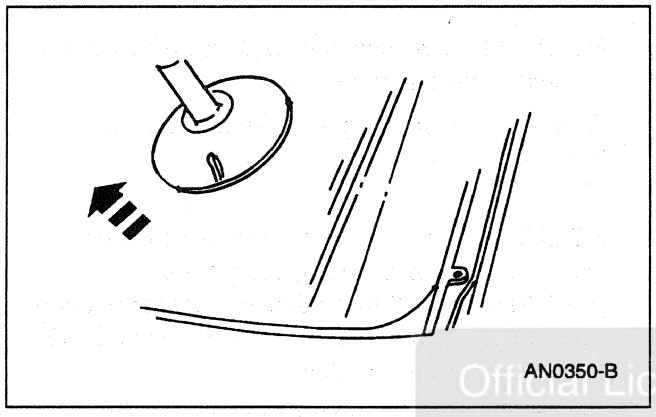

7. Remove the windshield glass.

Official Licensed Product
Ford Motor Company

8. **NOTE:** Urethane Glass Cleaner or equivalent meeting Ford specification WSB-M2G314-B must be thoroughly mixed for even pigmentation.

   NOTE: Urethane Glass Cleaner or equivalent meeting Ford specification WSB-M2G314-B must cure for a minimum of five minutes before the windshield glass installation.

   Apply Urethane Glass Cleaner or equivalent meeting Ford specification WSB-M2G314-B to the inside edges of the windshield glass.

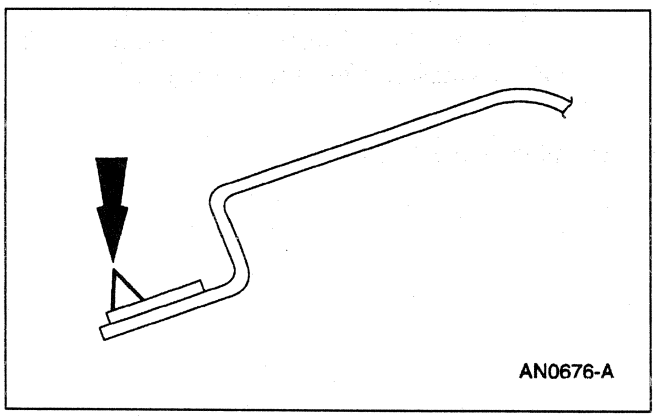

9. **NOTE:** The windshield glass must be installed before Urethane Adhesive meeting Ford specification WSB-M2G316-B skins over.

   Apply new Urethane Adhesive meeting Ford specification WSB-M2G316-B in an even bead directly onto the existing Urethane Adhesive on the pinch weld.

   The bead should be triangular in shape.

REMOVAL AND INSTALLATION (Continued)

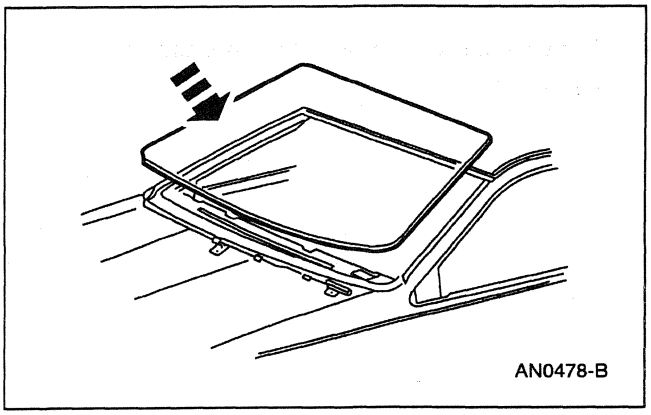

10. **NOTE:** Leave a door window slightly open until the Urethane Adhesive meeting Ford specification WSB-M2G316-B has cured.

    Install the windshield glass on the pinch weld. Align the windshield glass to body using the alignment marks made previously.

11. Install the windshield outside moulding.

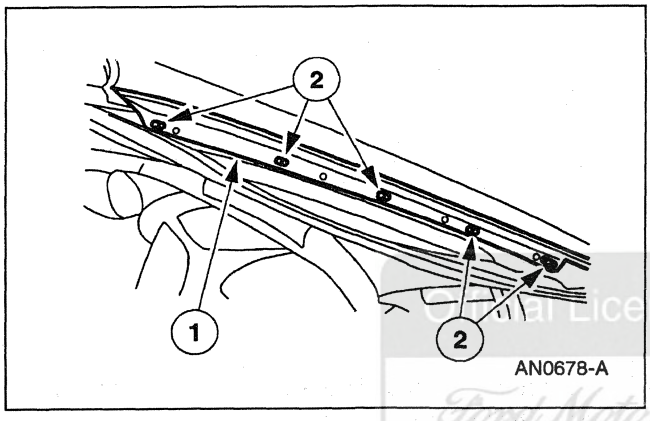

12. Install the windshield moulding retainers.
    1 Position the windshield moulding retainer.
    2 Install the rivets.

Ford Licensed Product
Ford Motor Company

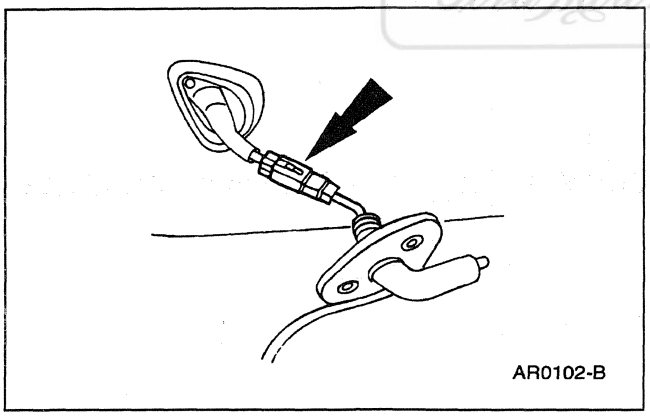

13. Connect the vanity mirror lamp connectors.

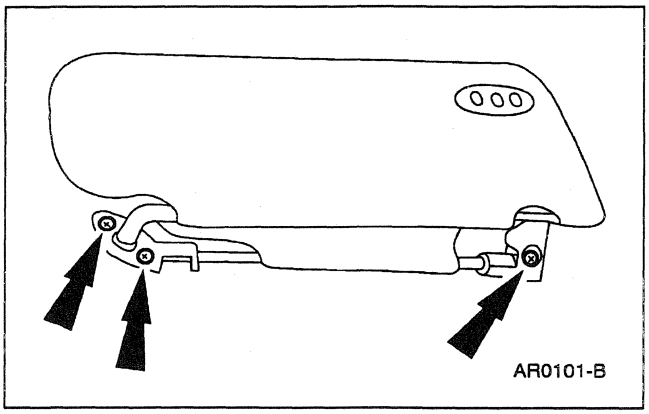

14. Install the visors and the screws.

REMOVAL AND INSTALLATION (Continued)

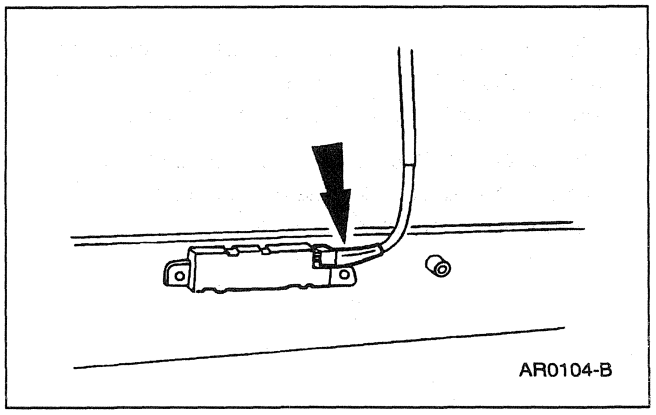

15. Connect the cellular phone microphone, if equipped.

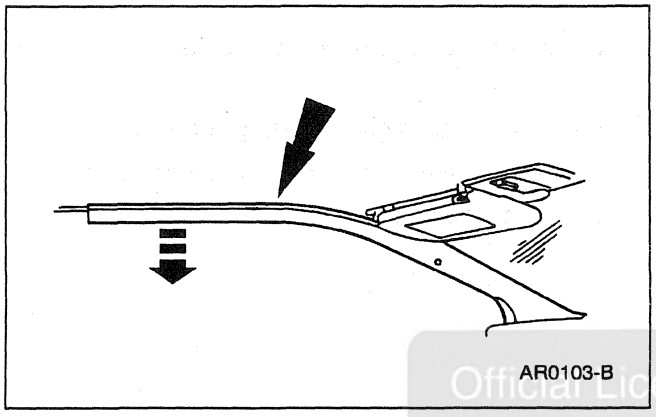

16. Install the roof side inner front mouldings.

Official Licensed Product
Ford Motor Company

17. Inspect the windshield glass for air or water leaks through the urethane seal.

GENERAL PROCEDURES

Grid Wire Repair — Back Window Glass

Special Tool(s)

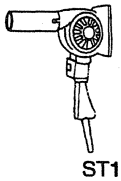 ST1110-A	Heat Gun 107-R0300 or equivalent

GENERAL PROCEDURES (Continued)

Lead Terminal Repair

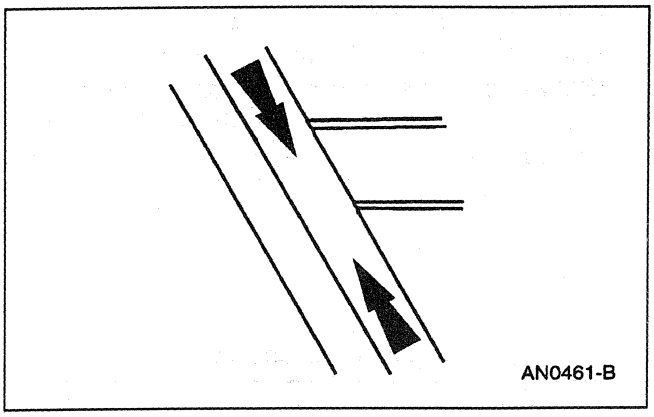

1. **NOTE:** The back window glass (42006) must be at room temperature at the time of repair.

   Clean the bus bar in the area to be serviced with steel wool (3/0 to 4/0 grade).

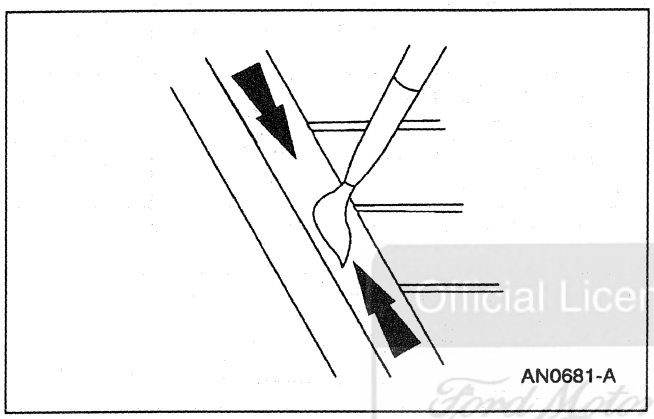

2. **NOTE:** Allow 10 minutes of drying time between the coats.

   Apply three coats of Rear Window Defroster Repair D8AZ-19562-AA or equivalent meeting Ford specification ESB-M4J58-A to the surface.

Official Licensed Product
Ford Motor Company

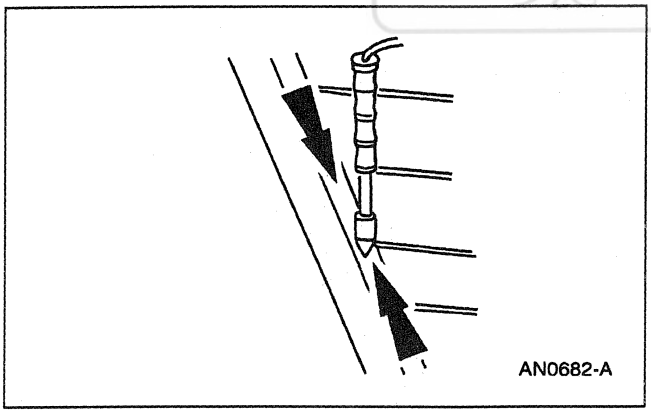

3. ⚠ **CAUTION: Do not overheat the back window glass or damage to the back window glass may occur.**

   Tin the bus bar service area with solder.

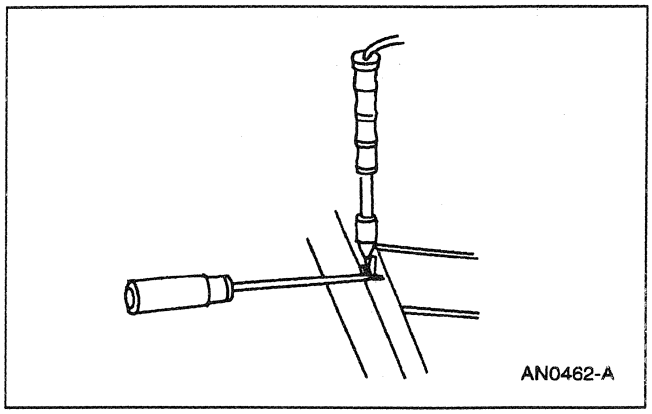

4. ⚠ **CAUTION: To prevent overheating the back window glass remove the soldering gun as soon as the solder flows.**

   Preheat the back window glass in the area to be serviced using the Rotunda Heat Gun and solder the terminal to the bus bar.

GENERAL PROCEDURES (Continued)

5. **NOTE:** Turn the heated back window switch and light (18C621) ON for five minutes prior to final inspection of service.

   Apply Rear Window Defroster Repair D8AZ-19562-AA or equivalent meeting Ford specification ESB-M4J58-A to the service area as needed.

SPECIFICATIONS

General Specifications

Item	Specification
Running—No Load	5 amperes or less at 12.8 volts
Lubricants	
Silicone Lubricant COAZ-19553-AA	ESR-M13P4-A
Multi-Purpose Grease Spray F5AZ-19G209-AA	ESR-M1C159-A
Multi-Purpose Grease DOAZ-19584-AA	ESB-M1C93-B and ESR-M1C159-A
Adhesives	
Foam Tape	—
Urethane Rubber Primer	WSB-M2G234-C
Urethane Adhesive	WSB-M2G316-B
Rear Window Defroster Repair D8AZ-19562-AA	ESB-M4J58-A
Cleaners	
Ultra Clear Spray Glass Cleaner E4AZ-19C507-AA	ESR-M14P5-A
Urethane Glass Cleaner	WSB-M2G314-B
Urethane Glass Prep	WSB-M5B280-C2

Torque Specifications

Description	Nm	Lb/In
Door Glass Top Run Retaining Screws	10-14	89-123
Door Window Glass Inner Stabilizer Retaining Nut	10-14	89-123
Window Regulator Electric Drive Screws	5-9	44-79
Lower Glass Run Retaining Screws	10-14	89-123
Window Regulator Equalizer Arm Bracket Retaining Nuts	10-14	89-123
Rear Quarter Window Glass Retaining Nuts	2-4	18-35

Not Licensed For Sale
Ford Motor Company

SECTION 501-12 Instrument Panel and Console

VEHICLE APPLICATION: Mark VIII

SUBJECT	PAGE
DESCRIPTION AND OPERATION	
Console — Floor	501-12-6
Instrument Panel	501-12-2
REMOVAL AND INSTALLATION	
Console — Floor	501-12-29
Glove Compartment	501-12-31
Instrument Panel	501-12-12
Instrument Panel — Center Finish Panel	501-12-7
Instrument Panel — Cluster Finish Panel	501-12-9
SPECIFICATIONS	501-12-33

Official Licensed Product
Ford Motor Company

DESCRIPTION AND OPERATION

Instrument Panel

Instrument Panel Components

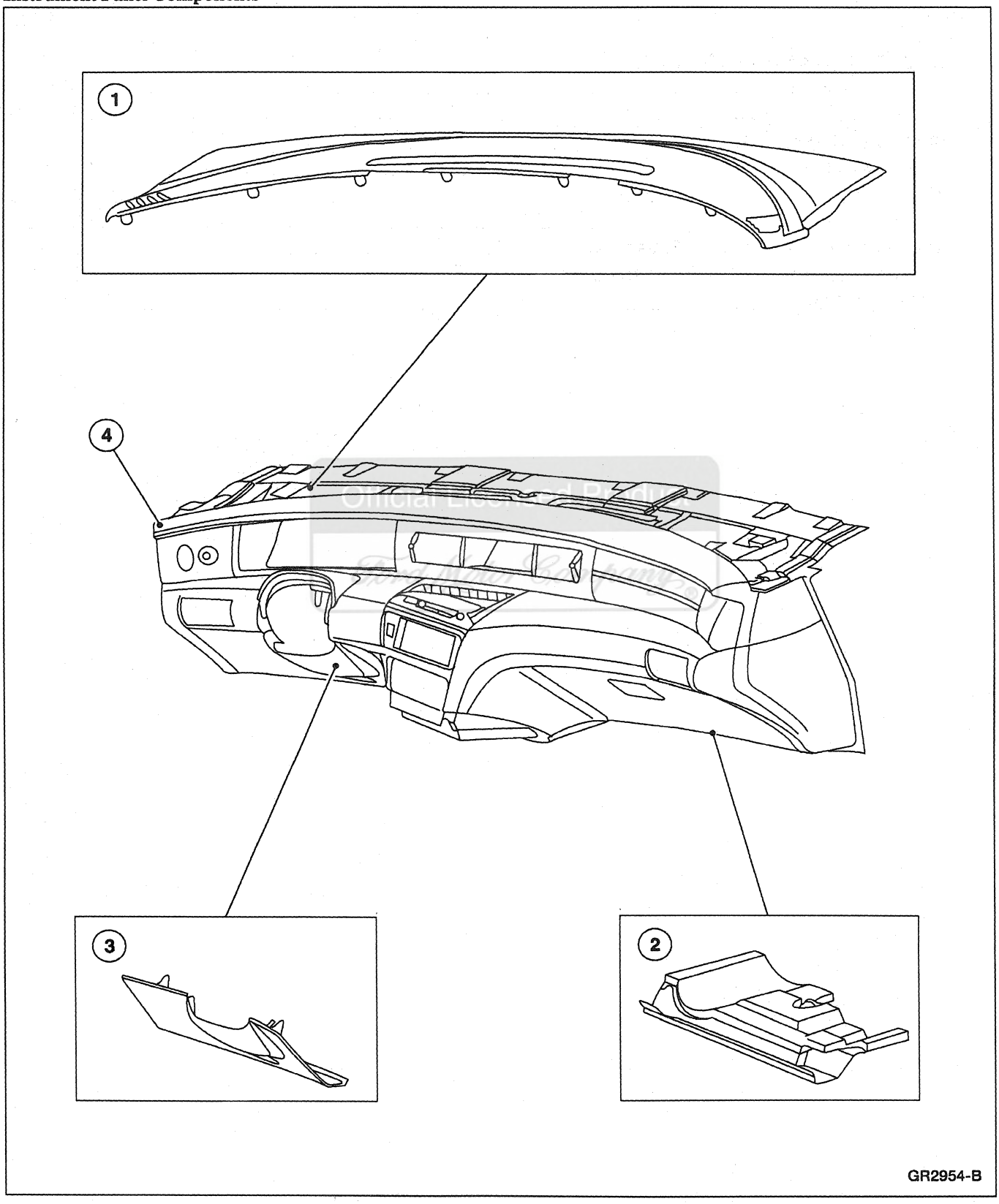

DESCRIPTION AND OPERATION (Continued)

Item	Part Number	Description
1	—	Instrument Panel Defroster Opening Grille
2	046A24	Instrument Panel Insulator (RH)

(Continued)

Item	Part Number	Description
3	04459	Instrument Panel Steering Column Cover (Lower)
4	04320	Instrument Panel

Official Licensed Product
Ford Motor Company

DESCRIPTION AND OPERATION (Continued)

Instrument Panel Components

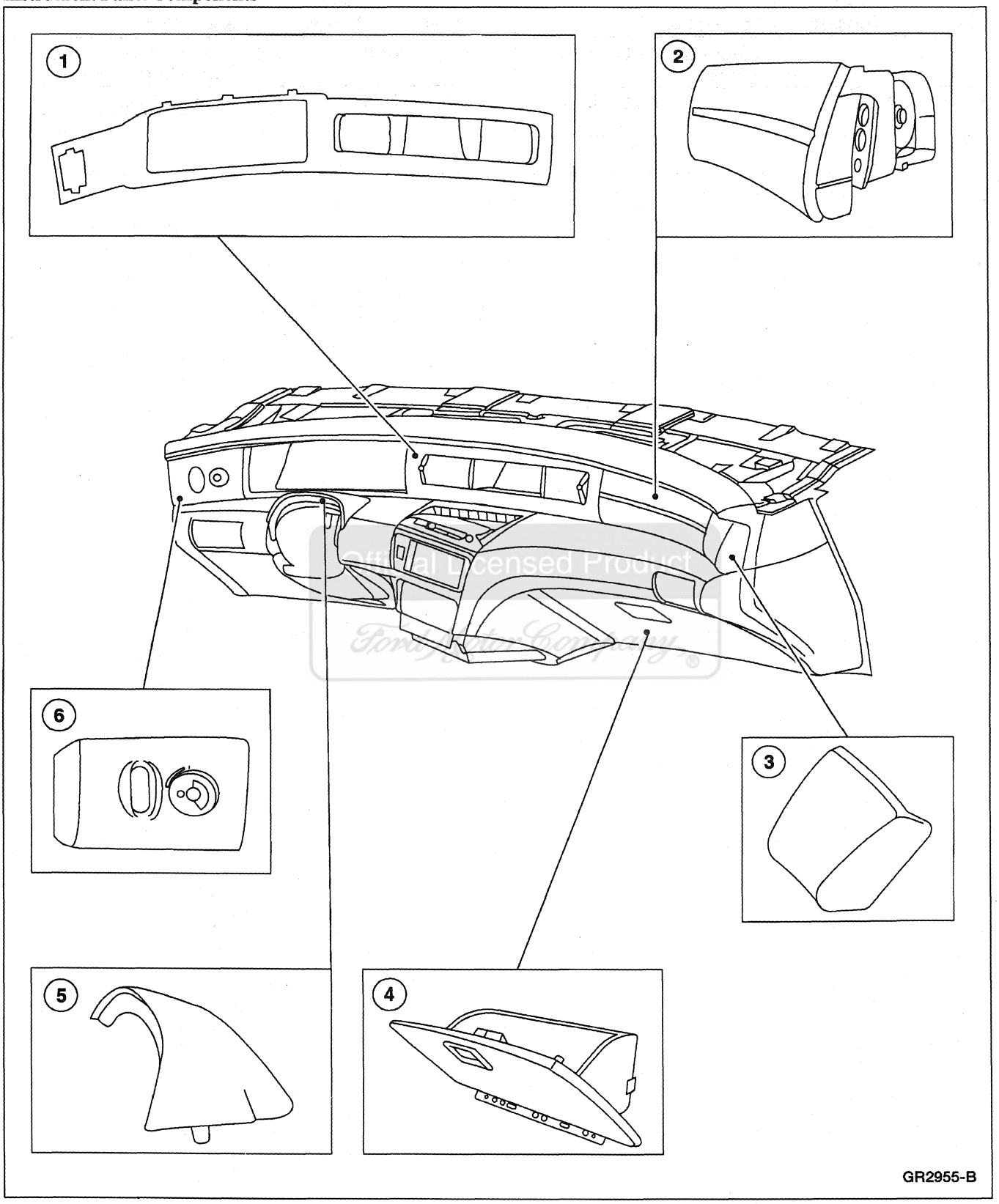

Official Licensed Product
Ford Motor Company

DESCRIPTION AND OPERATION (Continued)

Item	Part Number	Description
1	044D70	Instrument Panel Cluster Finish Panel
2	044A74	Passenger Side Air Bag Module
3	04338	Instrument Panel Finish Panel (RH)
4	06010	Glove Compartment
5	04459	Instrument Panel Steering Column Cover (Upper)
6	04338	Instrument Panel Finish Panel (LH)

(Continued)

Official Licensed Product
Ford Motor Company

DESCRIPTION AND OPERATION (Continued)

Console — Floor

Floor Console Components

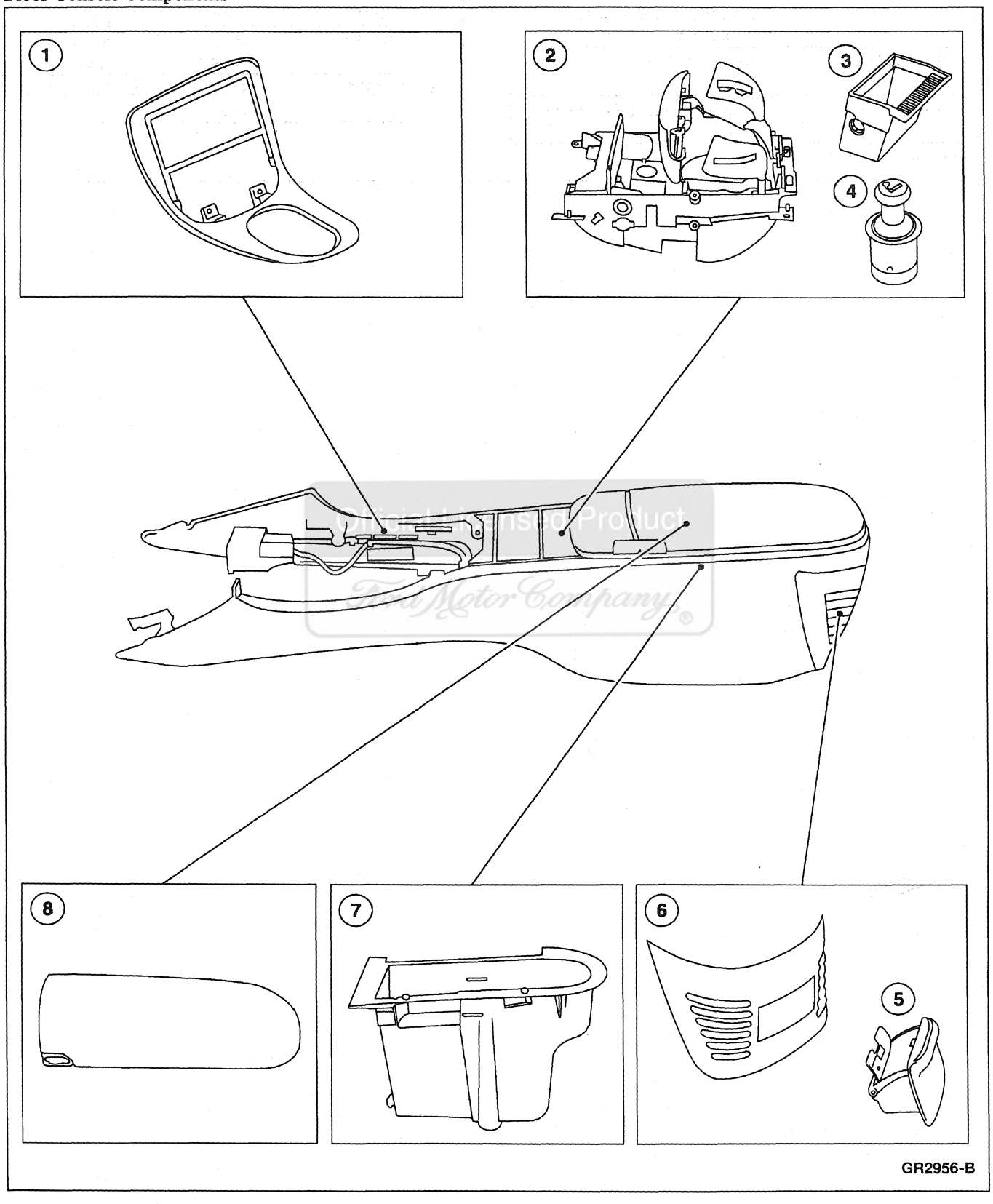

DESCRIPTION AND OPERATION (Continued)

Item	Part Number	Description
1	—	Instrument Panel Center Finish Panel
2	13556	Utility Tray Compartment
3	—	Ash Receptacle (Front)
4	15052	Cigar Lighter Knob and Element

(Continued)

Item	Part Number	Description
5	048A42	Receptacle (Rear)
6	045D72	Console Front Finish Panel
7	061A78	Console Front Compartment
8	—	Compartment Cover

REMOVAL AND INSTALLATION

Instrument Panel — Center Finish Panel

Removal

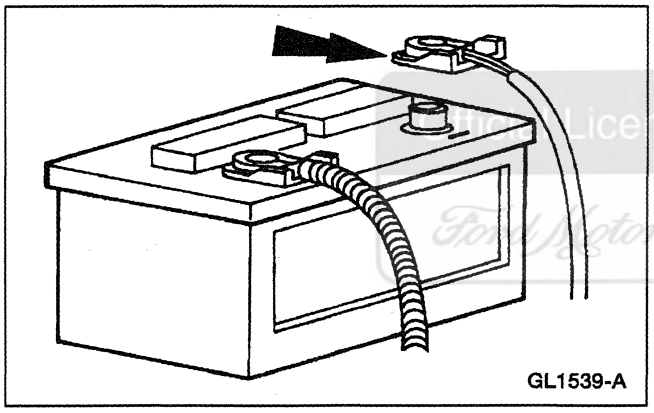
GL1539-A

1. Disconnect the battery ground cable (14301).

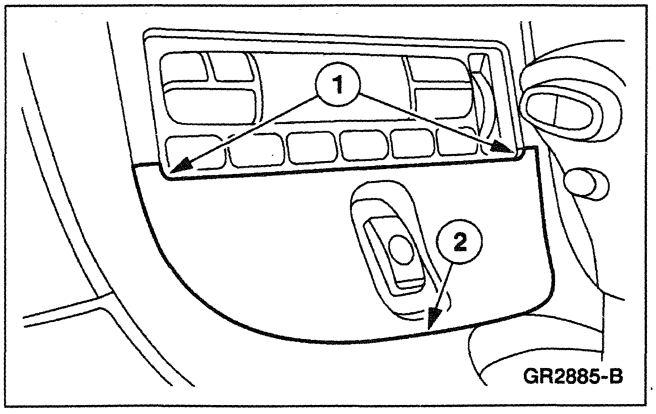

GR2885-B

2. ⚠ **CAUTION: Do not pry on the outside edge of the instrument panel control opening cover with a screwdriver or similar tool. Damage to the instrument panel center finish panel may result.**

   Position the instrument panel control opening cover assembly aside.

   1 Pull at each inside corner at the top of the instrument panel control opening cover assembly to release the upper clips.

   2 Pull the instrument panel control opening cover assembly straight out to release the lower clip and position aside.

Unofficial Licensed Product
Ford Motor Company

REMOVAL AND INSTALLATION (Continued)

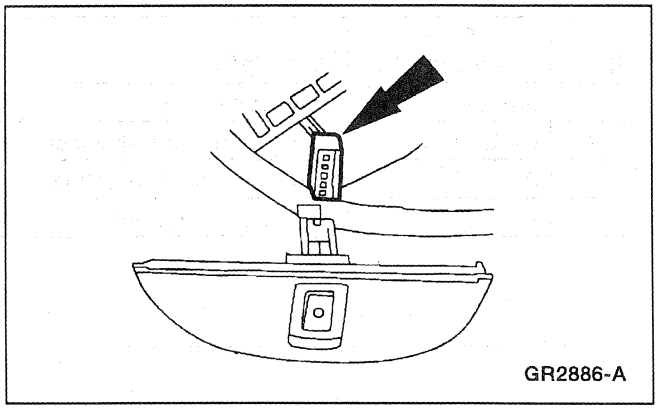
GR2886-A

3. Remove the instrument panel control opening cover assembly.
   - Disconnect the electrical connector.
   - If equipped, disconnect the heated seat switch electrical connectors.

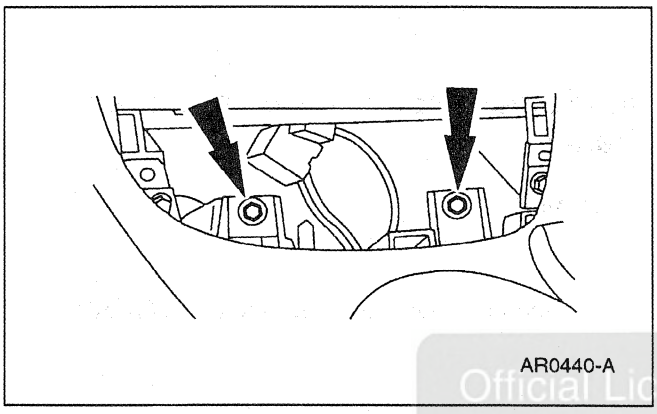
AR0440-A

4. Remove the instrument panel center finish panel screws.

Official Licensed Product
Ford Motor Company

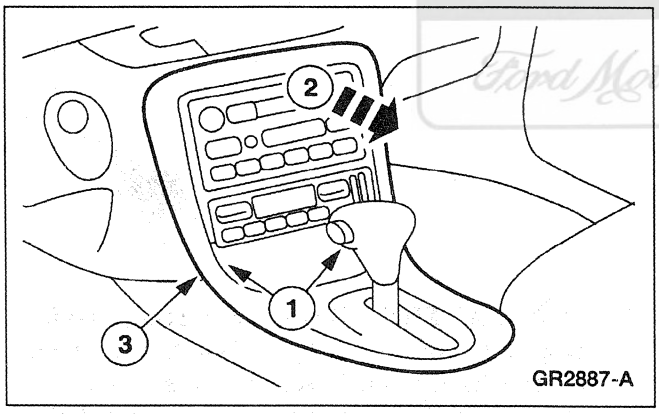

GR2887-A

5. ⚠ **CAUTION: Do not pry on the outside edges of the instrument panel lower center finish panel.**

   Position the instrument panel center finish panel aside.

   1 Lift up on the back of the instrument panel center finish panel from inside the opening.

   2 Pull the instrument panel center finish panel forward.

   3 Position the instrument panel center finish panel aside.

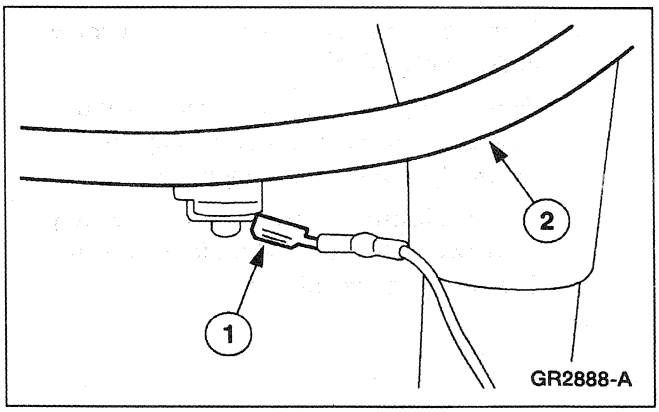

GR2888-A

6. Remove the instrument panel center finish panel.

   1 Disconnect the ground wire.

   2 Remove the instrument panel center finish panel.

REMOVAL AND INSTALLATION (Continued)

Installation

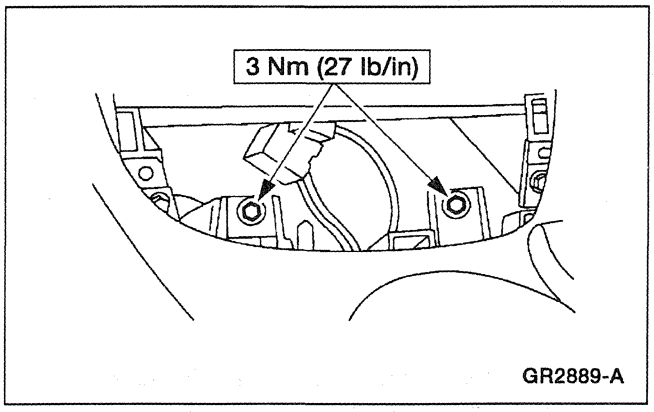

1. **NOTE:** When the battery (10655) is disconnected and reconnected, some abnormal drive symptoms may occur while the vehicle relearns its adaptive strategy. The vehicle may need to be driven 16 km (10 mi) or more to relearn the strategy.

   To install, reverse the removal procedure.

Instrument Panel — Cluster Finish Panel

Removal

Official Licensed Product
Ford Motor Company

1. Move the steering column to the full out and down position.

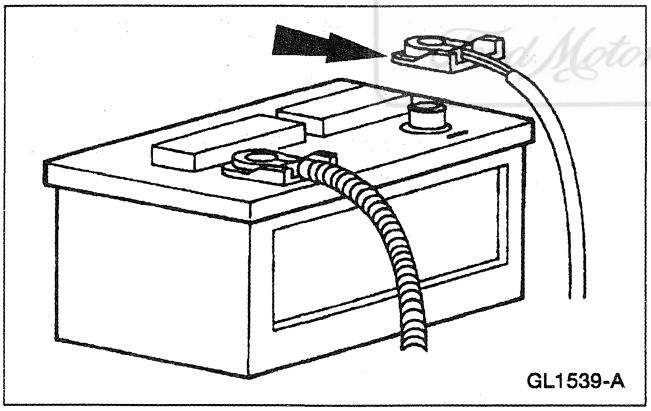

2. Disconnect the battery ground cable (14301).

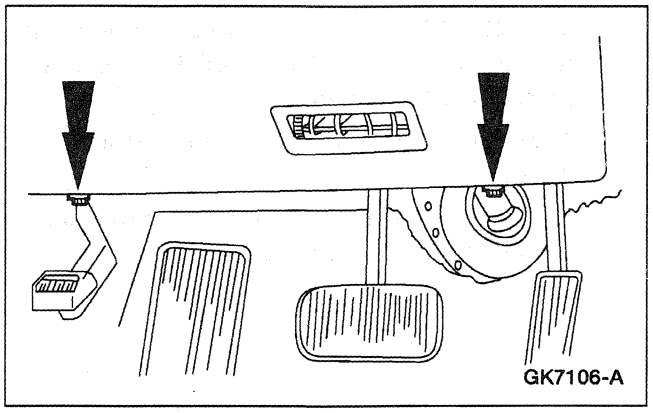

3. Remove the screws and the lower instrument panel steering column cover (04459).

REMOVAL AND INSTALLATION (Continued)

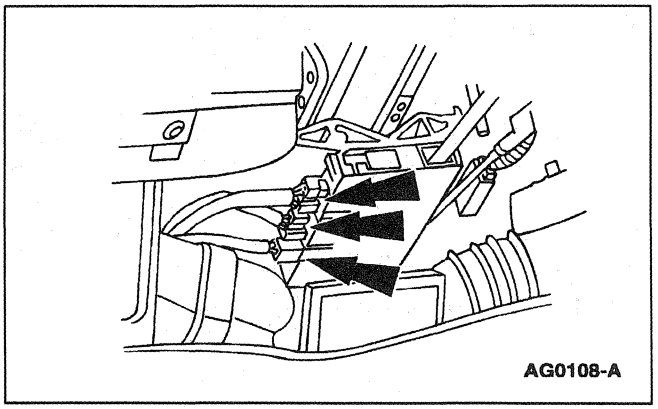

4. Disconnect the steering column electrical connectors.

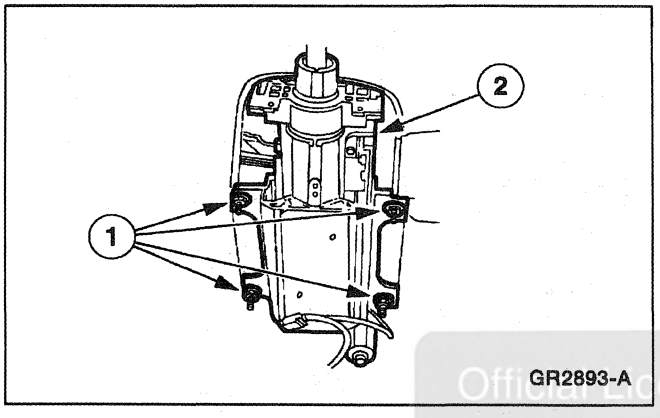

5. Lower the steering column onto the instrument panel reinforcing bar.
   1 Remove the nuts.
   2 Lower the steering column onto the instrument panel reinforcing bar.

Official Licensed Product
Ford Motor Company

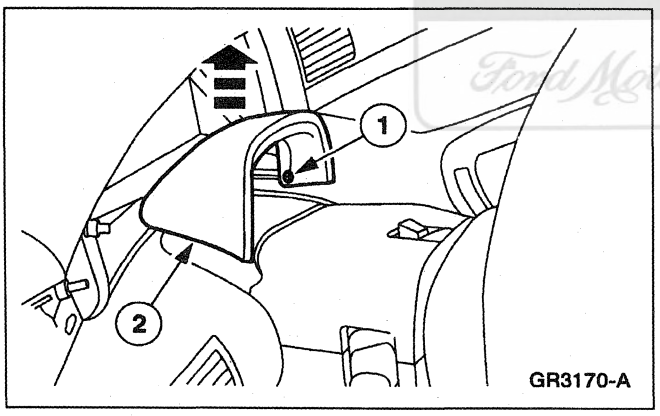

6. Remove the upper instrument panel steering column cover.
   1 Remove the two screws.
   2 Remove the upper instrument panel steering column cover.

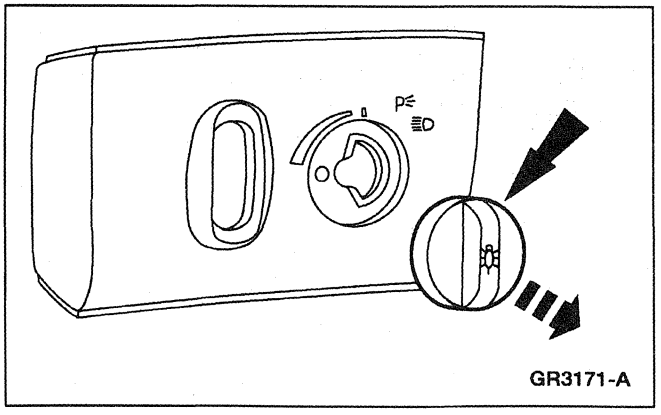

7. **⚠ CAUTION: Use care when removing the headlamp switch knob to avoid damaging the knob or the finish panel.**

   Remove the headlamp switch knob and shaft (11661).
   - Grasp the headlamp switch knob firmly and pull rearward to remove.

REMOVAL AND INSTALLATION (Continued)

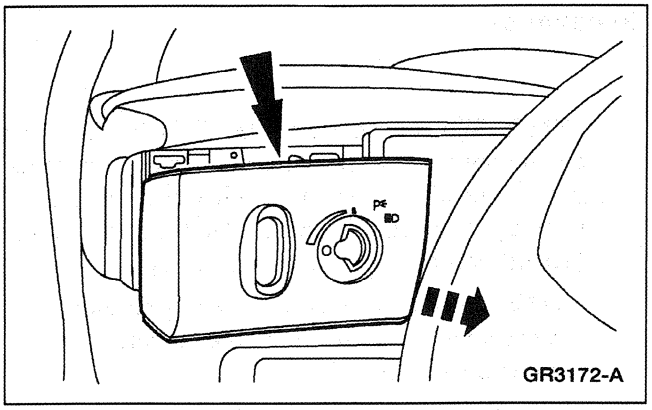

8. Remove the LH instrument panel finish panel.
   - Pull the instrument panel finish panel rearward in vehicle to disengage the clips.

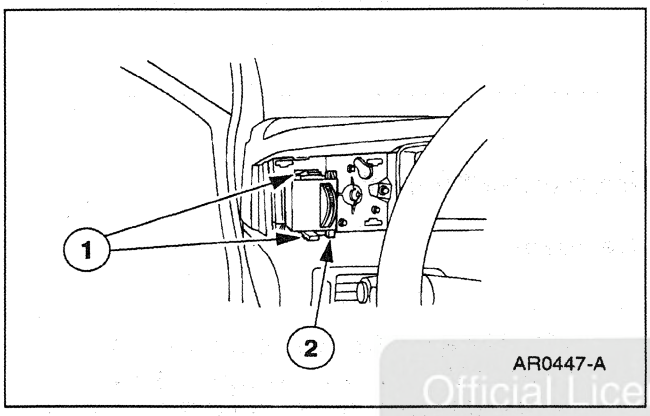

9. Remove the instrument panel dimmer switch.
   1 Release the clips.
   2 Remove the instrument panel dimmer switch.
   - Disconnect the electrical connector.

Official Licensed Product
Ford Motor Company

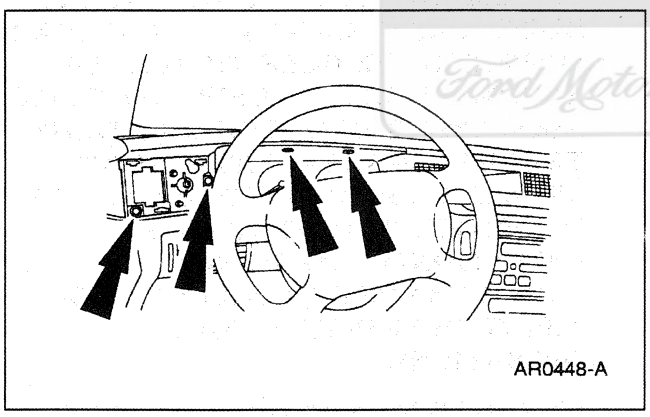

10. Remove the instrument panel cluster finish panel screws.

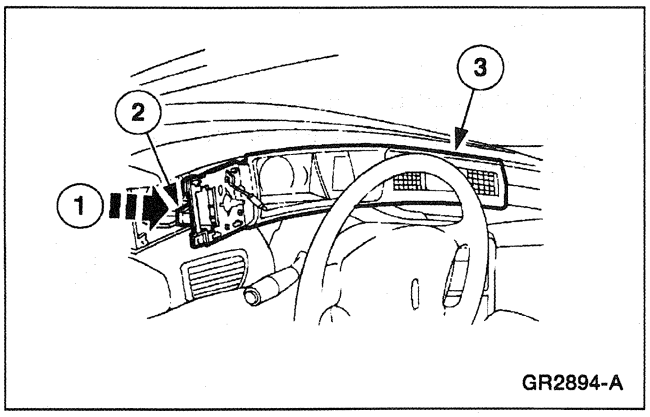

11. Remove the instrument panel cluster finish panel.
    1 Position the instrument panel cluster finish panel forward.
    2 Disconnect the electrical connector.
    3 Remove the instrument panel cluster finish panel.

REMOVAL AND INSTALLATION (Continued)

Installation

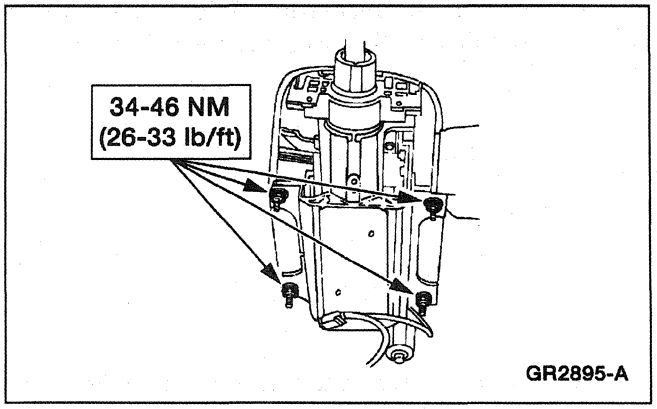

1. **NOTE:** When the battery (10655) is disconnected and reconnected, some abnormal drive symptoms may occur while the vehicle relearns its adaptive strategy. The vehicle may need to be driven 16 km (10 mi) or more to relearn the strategy.

   NOTE: Install the outboard steering column cover screw before installing the inboard steering column cover screw.

   To install, reverse the removal procedure.

Instrument Panel

Removal

Official Licensed Ford Motor Company

1. **WARNING: THE ELECTRICAL POWER TO THE AIR SUSPENSION SYSTEM MUST BE SHUT OFF PRIOR TO HOISTING, JACKING OR TOWING AN AIR SUSPENSION VEHICLE. THIS CAN BE ACCOMPLISHED BY TURNING OFF THE AIR SUSPENSION SWITCH LOCATED IN THE LH LUGGAGE COMPARTMENT AREA. FAILURE TO DO SO MAY RESULT IN UNEXPECTED INFLATION OR DEFLATION OF THE AIR SPRINGS WHICH MAY RESULT IN SHIFTING OF THE VEHICLE DURING THESE OPERATIONS.**

   Raise and support the vehicle; refer to Section 100-02.

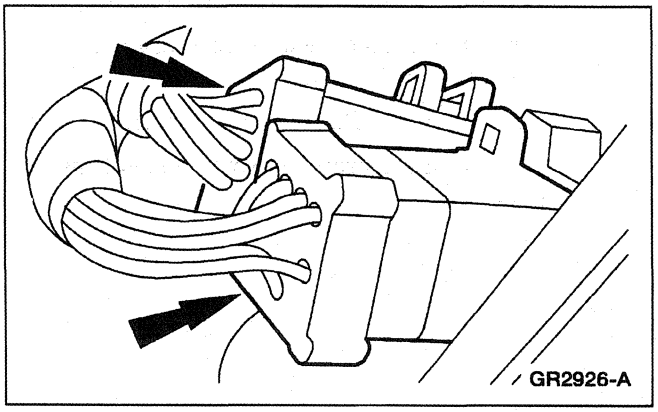

2. Disconnect the transmission wiring harness connectors located on the transmission crossmember.

REMOVAL AND INSTALLATION (Continued)

3. Lower the vehicle.

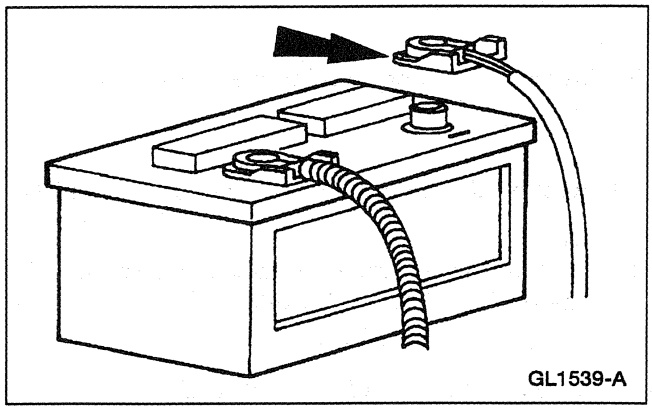

4. Disconnect the battery ground cable (14301).

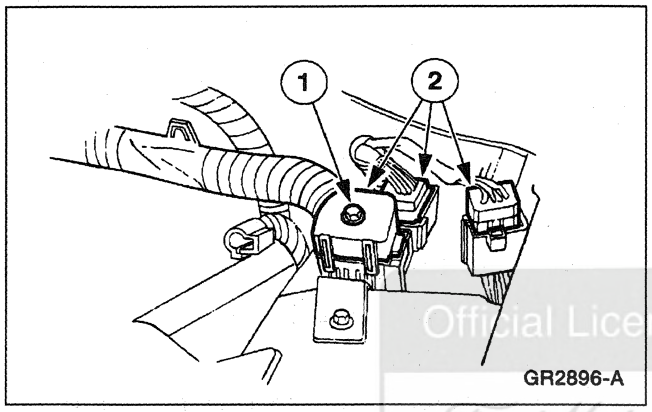

5. Disconnect the electrical connectors.
   1 Loosen the bulkhead electrical connector bolt.
   2 Disconnect the electrical connectors.

Official Licensed Product
Ford Motor Company

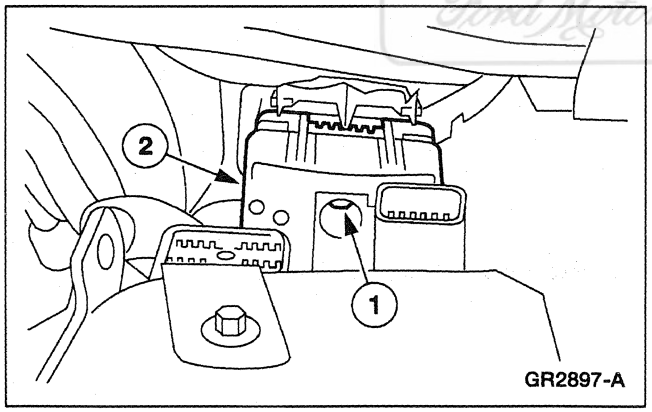

6. Disconnect the LH bulkhead electrical connector.
   1 Loosen the bolt.
   2 Disconnect the LH bulkhead electrical connector.

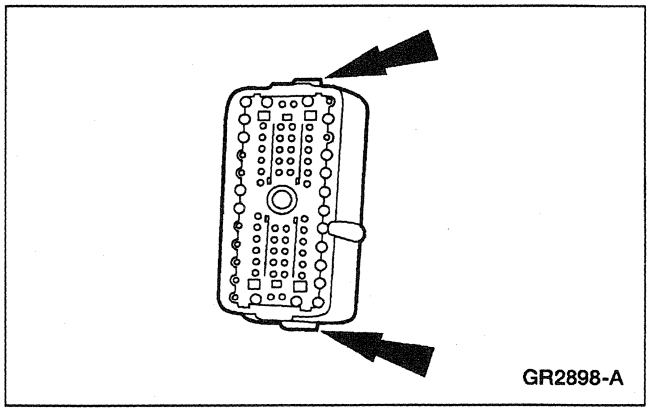

7. Unclip the LH bulkhead electrical connector from the dash panel.

REMOVAL AND INSTALLATION (Continued)

8. Remove the steering column; refer to Section 211-04.

9. Remove the floor console; refer to Console — Floor.

10. Remove the radio chassis; refer to Section 415-01.

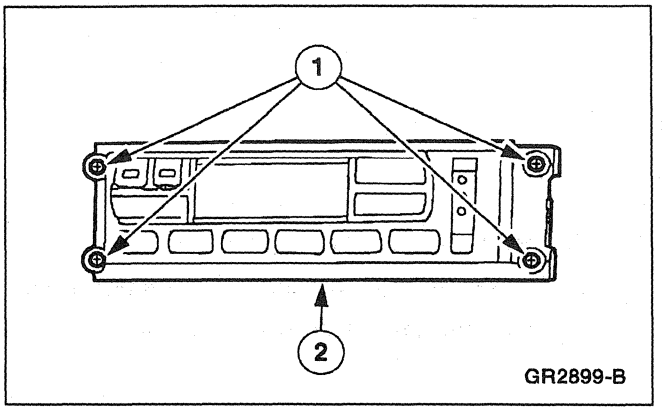

11. Position the electronic automatic temperature control (EATC) module aside.
    1 Remove the screws.
    2 Position the EATC module aside.

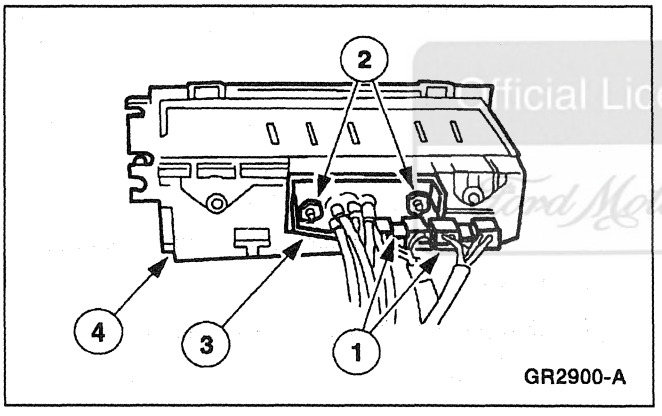

12. Remove the EATC module.
    1 Disconnect the electrical connectors.
    2 Remove the nuts.
    3 Disconnect the vacuum harness connector.
    4 Remove the EATC module.

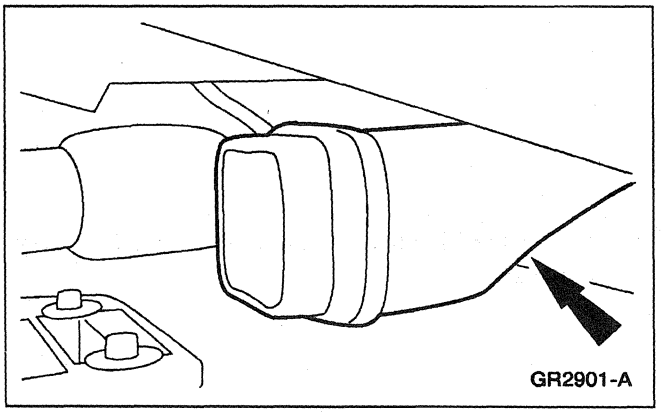

13. Remove the heater outlet duct.

Official Licensed Product
Ford Motor Company

REMOVAL AND INSTALLATION (Continued)

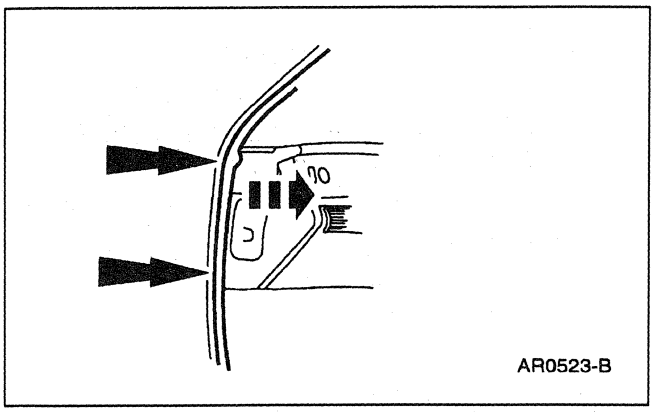
AR0523-B

14. Position the LH and RH front door weatherstrips (20530) aside.

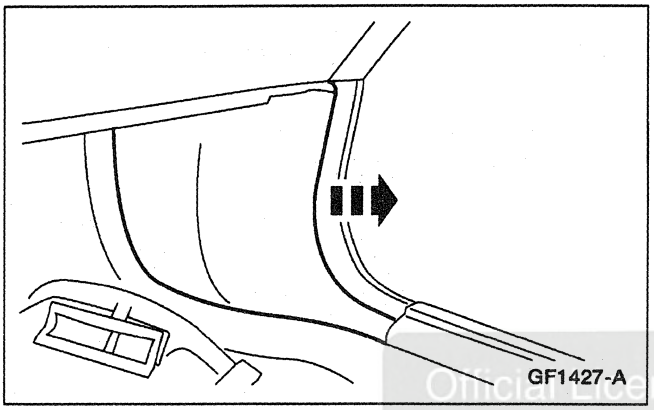
GF1427-A

15. Remove the LH and RH cowl side trim panels (02344).

Official Licensed Product
Ford Motor Company

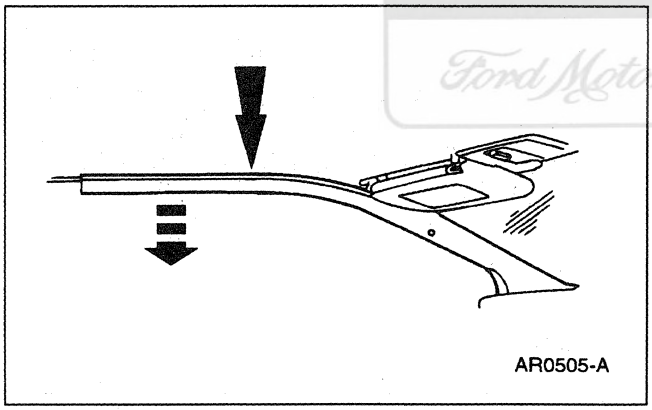
AR0505-A

16. Remove the LH and RH roof side inner front mouldings (51752).

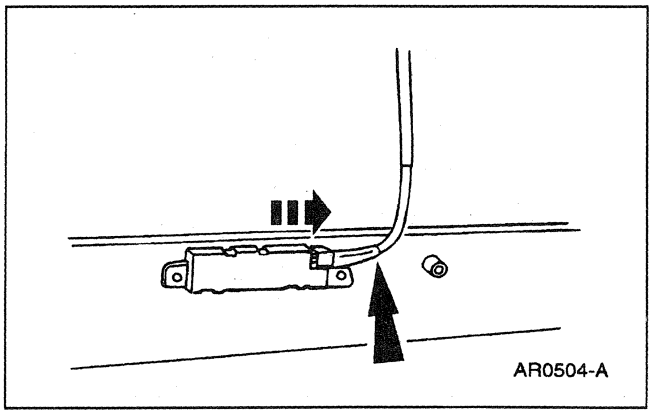
AR0504-A

17. If equipped, on LH roof side inner front moulding, disconnect the mobile phone speaker electrical connector.

REMOVAL AND INSTALLATION (Continued)

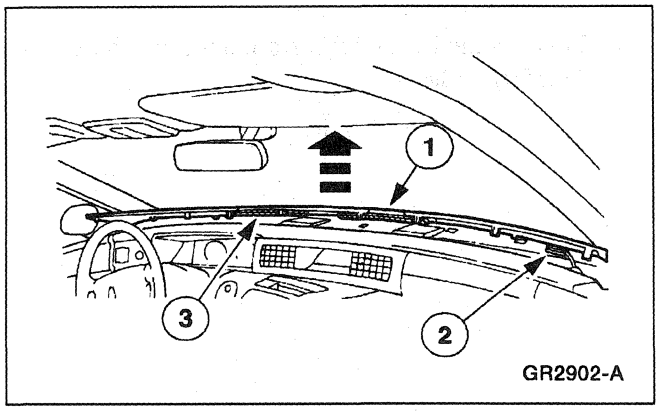

18. Remove the instrument panel defroster opening grille.
    1 Lift the rear edge of the instrument panel defroster opening grille.
    2 Disconnect the A/C sunload sensor electrical connector.
    3 Remove the instrument panel defroster opening grille.

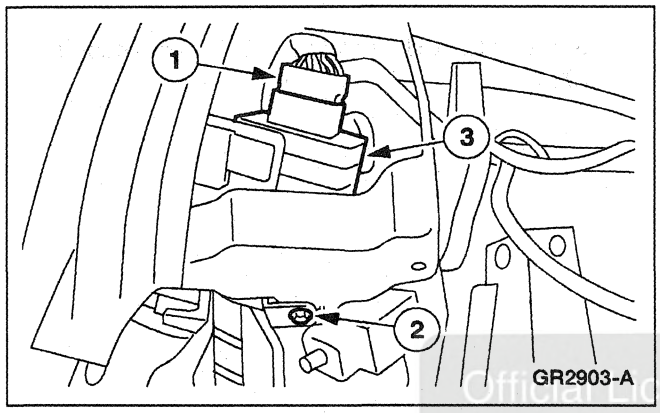

19. Remove the windshield wiper control module and bracket.
    1 Disconnect the electrical connector
    2 Remove the screw.
    3 Remove the windshield wiper control module and bracket.

Official Licensed Product
Ford Motor Company

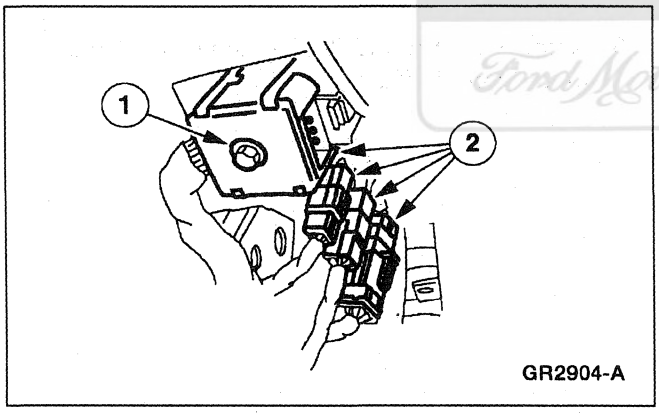

20. Disconnect the LH wiring harness connectors.
    1 Loosen the bulkhead electrical connector bolt.
    2 Disconnect the LH wiring harness connectors.

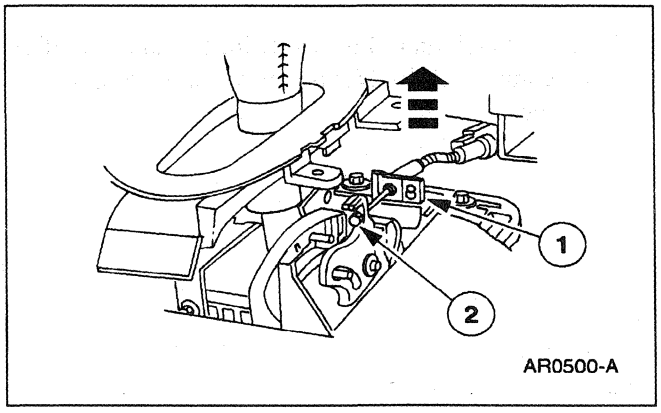

21. Disconnect the ignition/shifter interlock cable (3F719).
    1 Depress the locking tab.
    2 Release the ignition/shifter interlock cable from the pawl.

REMOVAL AND INSTALLATION (Continued)

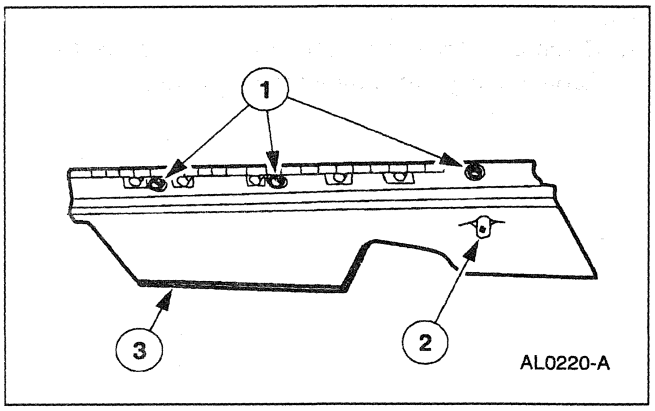

22. Remove the RH instrument panel insulator (046A24).
    1 Remove the pushpins.
    2 Remove the courtesy lamp and socket.
    3 Remove the instrument panel insulator.

23. Remove the glove compartment (06010); refer to Glove Compartment.

24. Remove the passenger side air bag module (044A74); refer to Section 501-20B.

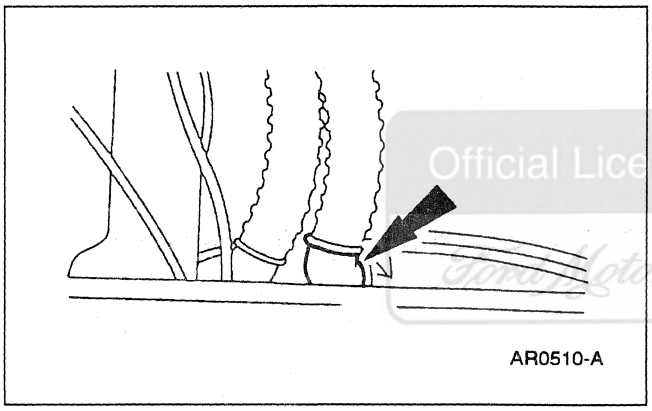

25. Disconnect the EATC sensor hose and elbow.

Official Licensed Product
Ford Motor Company

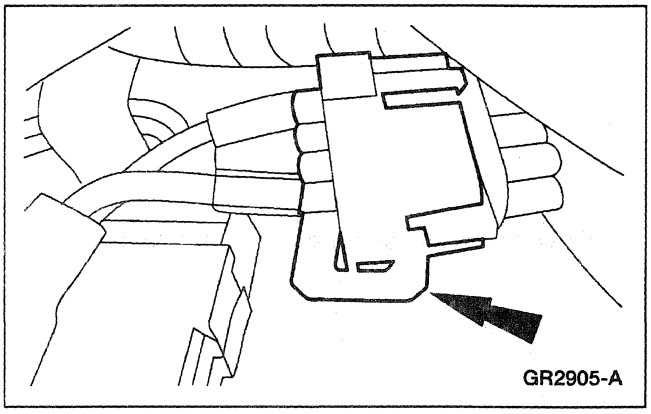

26. Disconnect the climate control vacuum harness connector.

REMOVAL AND INSTALLATION (Continued)

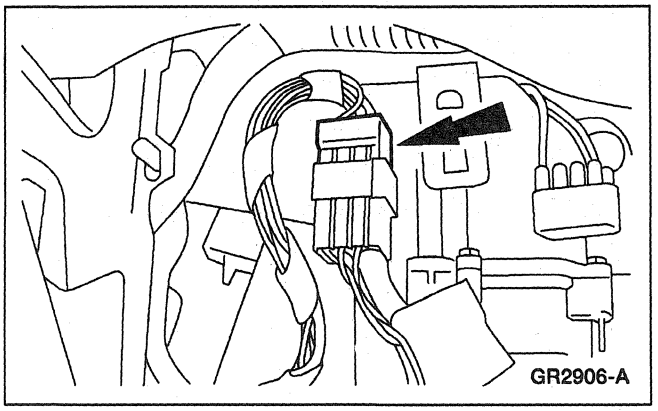

27. Disconnect the wiring harness in-line connector through the glove compartment opening.

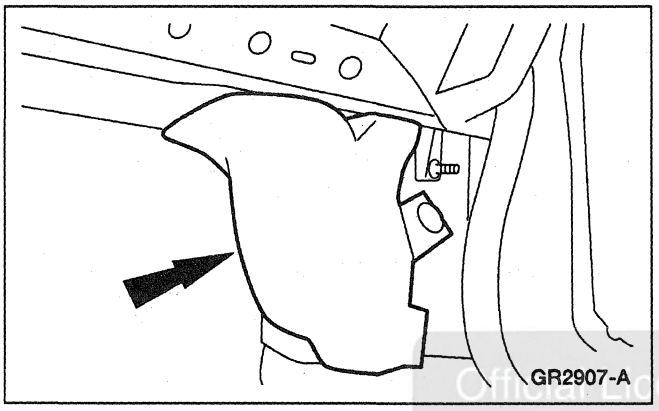

28. Remove the RH cowl side insulator pad.
    - Remove the pushpin.

Official Licensed Product
Ford Motor Company

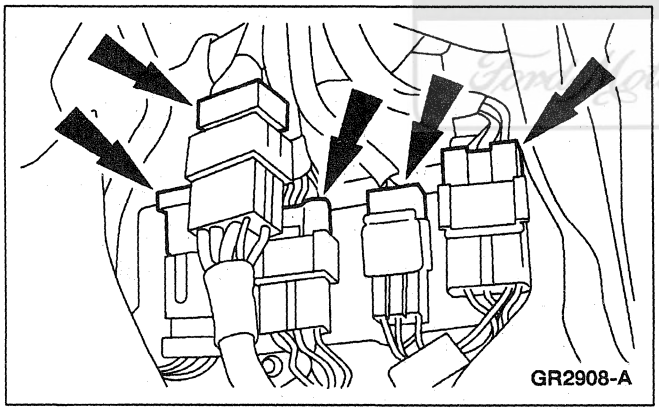

29. Disconnect the RH wiring harness connectors.

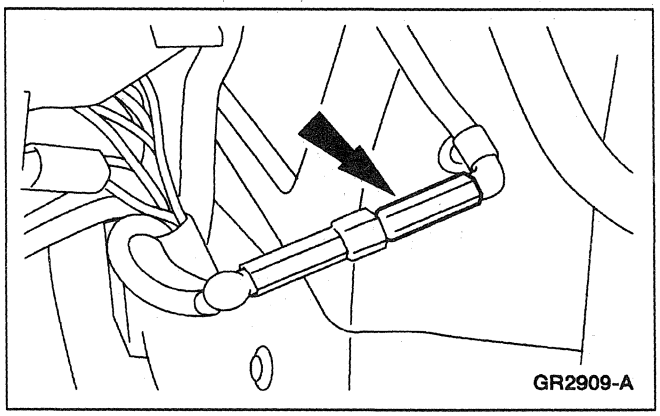

30. Disconnect the antenna cable in-line connector.

REMOVAL AND INSTALLATION (Continued)

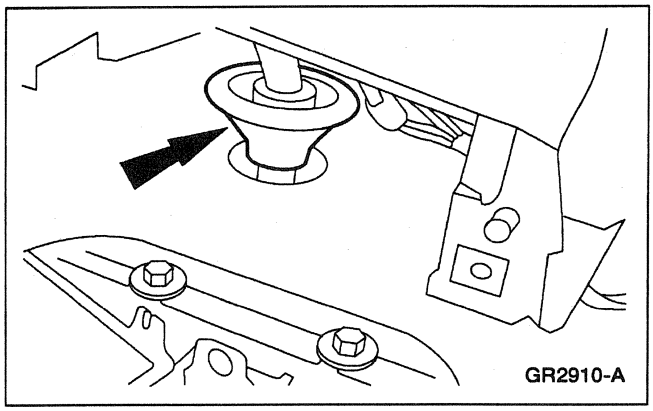

31. Unseat the transmission wiring harness grommet from the floorpan.

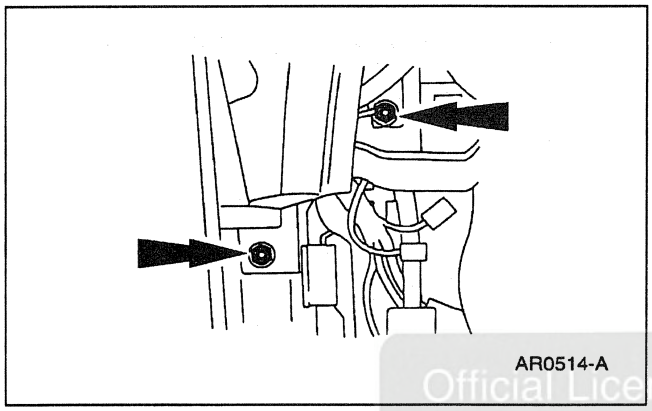

32. Remove the LH instrument panel cowl side nuts.

Official Licensed Product
Ford Motor Company

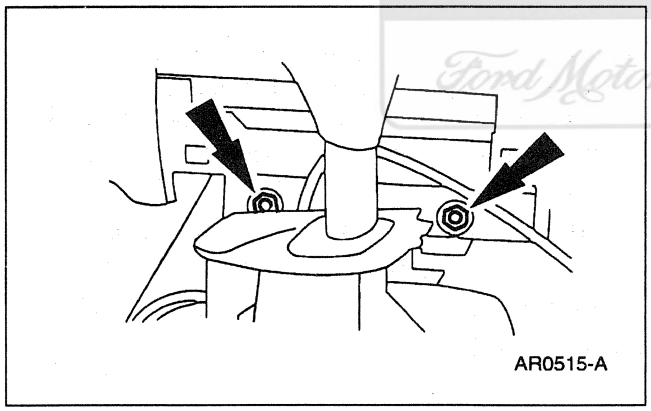

33. Remove the instrument panel center support nuts.

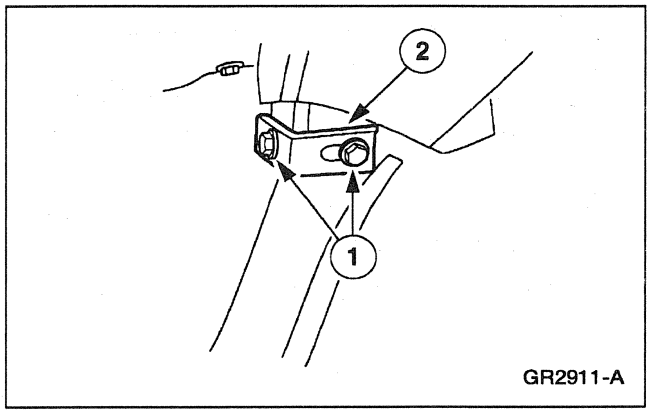

34. Remove the instrument panel to floor bracket.
    1 Remove the bolts.
    2 Remove the instrument panel to floor bracket.

REMOVAL AND INSTALLATION (Continued)

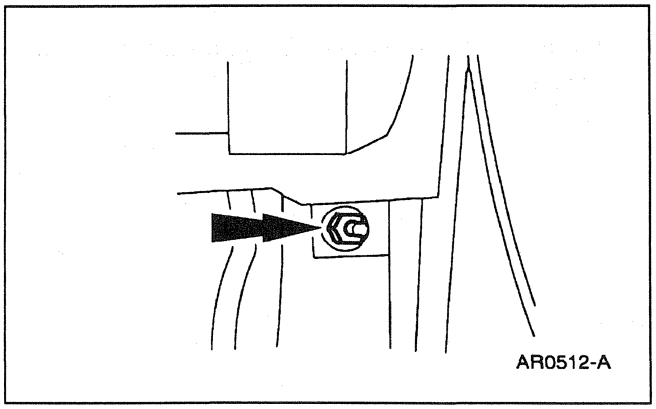

35. Remove the RH instrument panel cowl side nut.

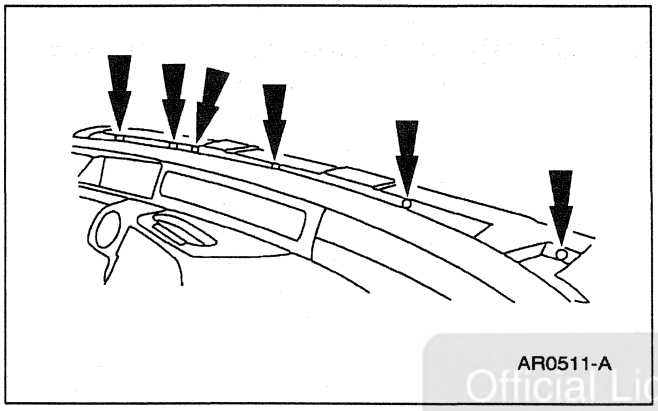

36. Remove the instrument panel cowl top bolts.

Official Licensed Product
Ford Motor Company

37. **CAUTION: When removing the instrument panel, be sure to feed the transmission wiring harness through the floor pan opening or damage to the wiring harness may occur.**

    NOTE: Two technicians are required to remove the instrument panel (04320) from the vehicle.

    Remove the instrument panel from the vehicle.

Installation

1. **CAUTION: When installing the instrument panel, be sure to feed the transmission wiring harness through the floor pan opening or damage to the wiring harness may occur.**

   NOTE: Two technicians are required to install the instrument panel in the vehicle.

   Install the instrument panel into the vehicle.

REMOVAL AND INSTALLATION (Continued)

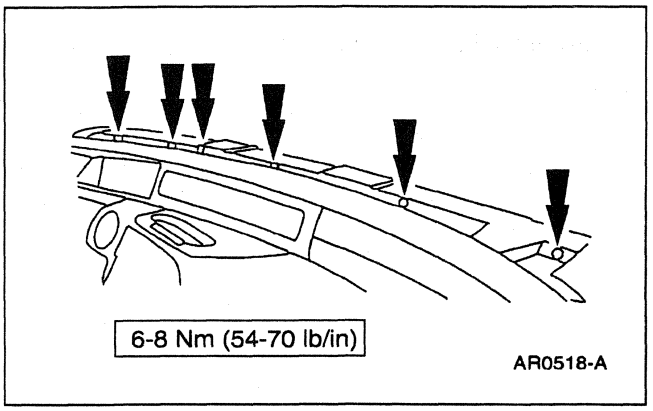

2. Install the instrument panel cowl top bolts.

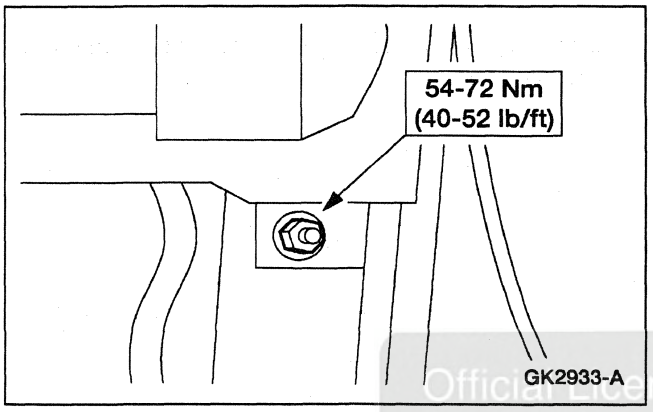

3. Install the RH instrument panel cowl side nut.

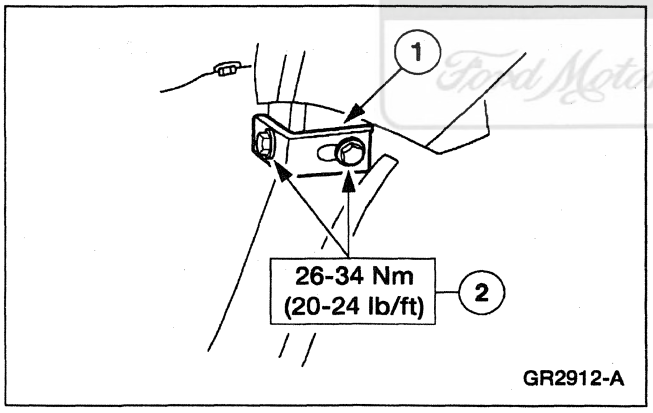

4. Install the instrument panel to floor bracket.
   1 Position the instrument panel to floor bracket.
   2 Install the bolts.

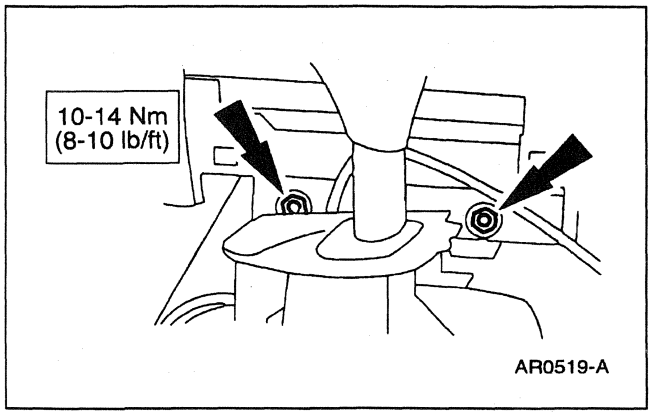

5. Install the instrument panel center support nuts.

Official Licensed Product
Ford Motor Company

REMOVAL AND INSTALLATION (Continued)

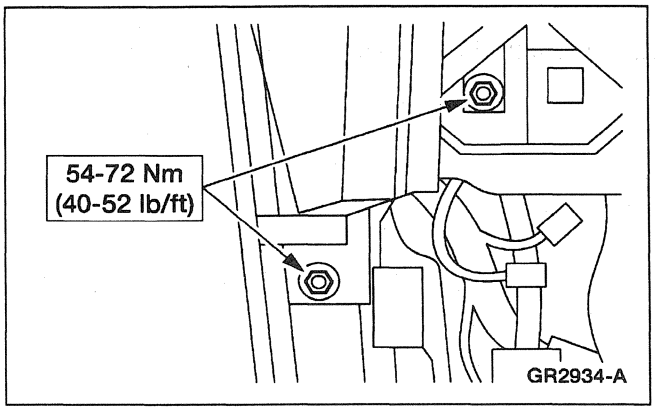

6. Install the LH instrument panel cowl side nuts.

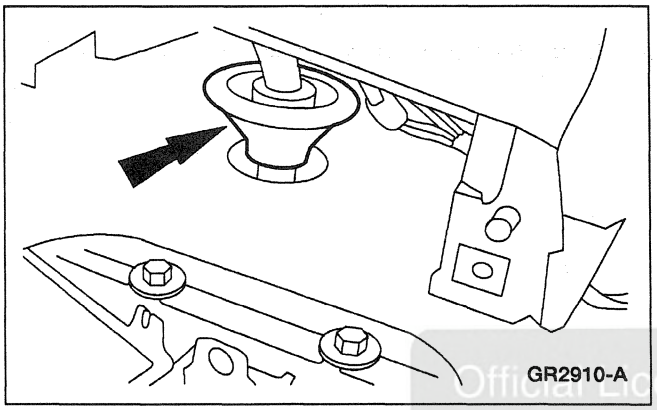

7. Seat the transmission wiring harness grommet into the floorpan.

Official Licensed Product
Ford Motor Company

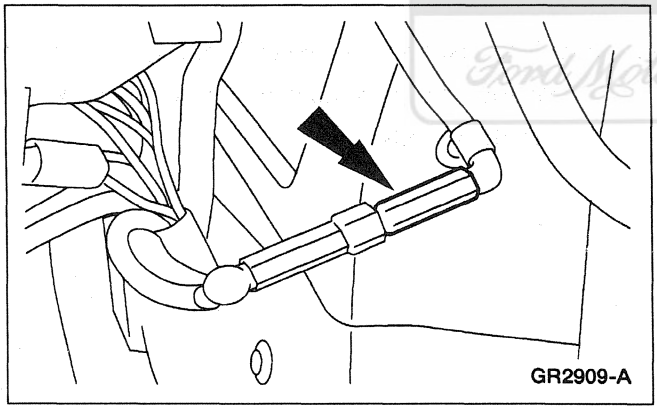

8. Connect the antenna cable in-line connector.

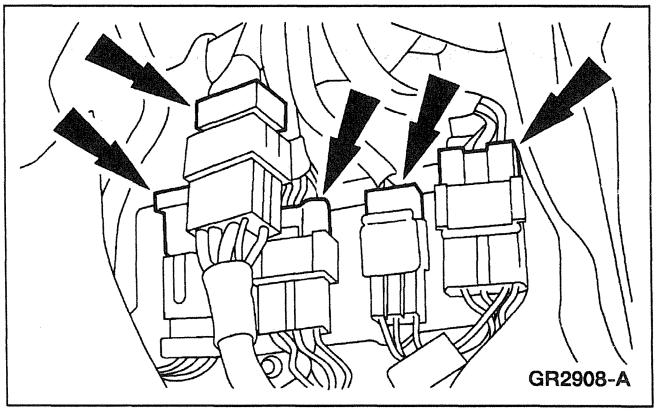

9. Connect the RH wiring harness connectors.

REMOVAL AND INSTALLATION (Continued)

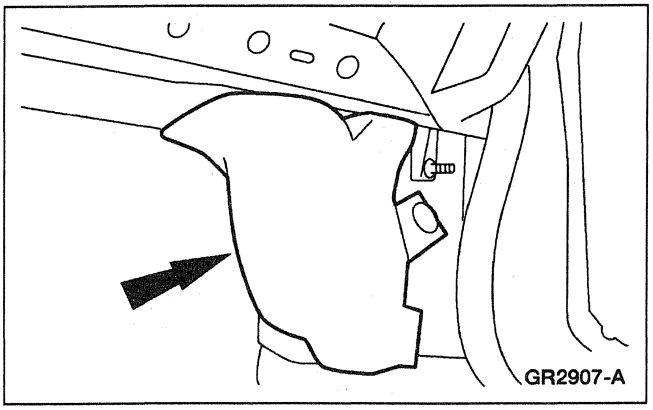

10. Install the RH cowl side insulator pad.
    - Install the pushpin.

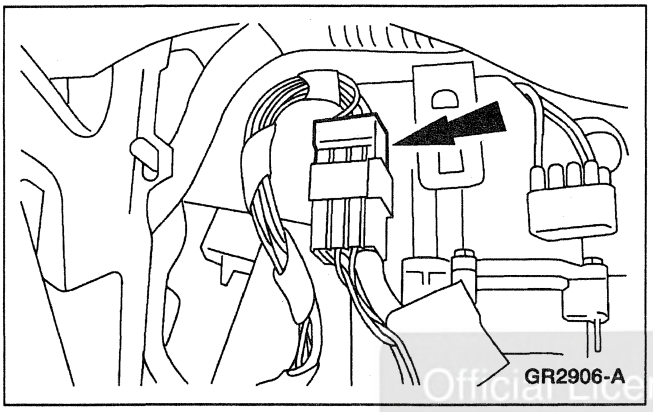

11. Connect the wiring harness in-line connector through the glove compartment opening.

Official Licensed Product
Ford Motor Company

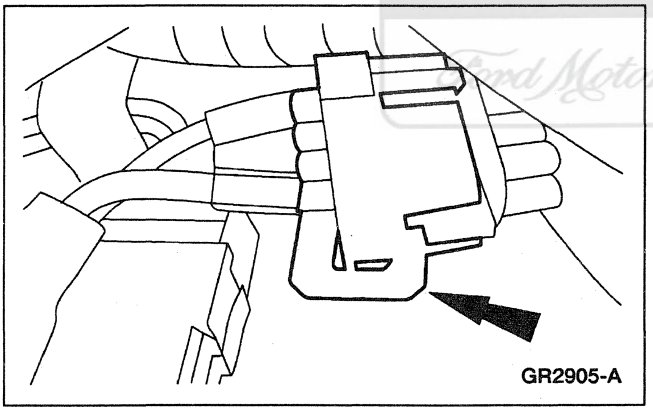

12. Connect the climate control vacuum harness connector.

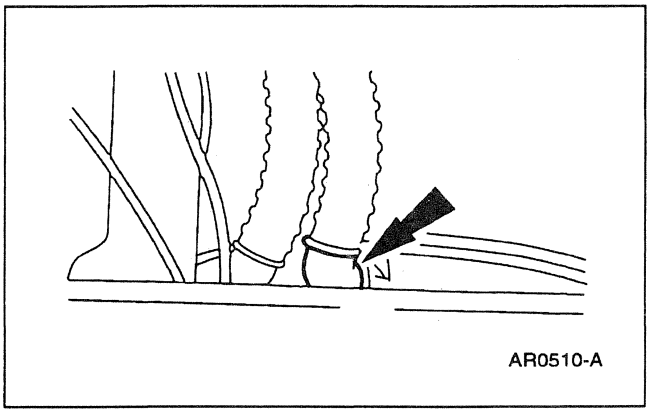

13. Connect the EATC sensor hose and elbow.

REMOVAL AND INSTALLATION (Continued)

14. Install the passenger side air bag module; refer to Section 501-20B

15. Install the glove compartment; refer to Glove Compartment.

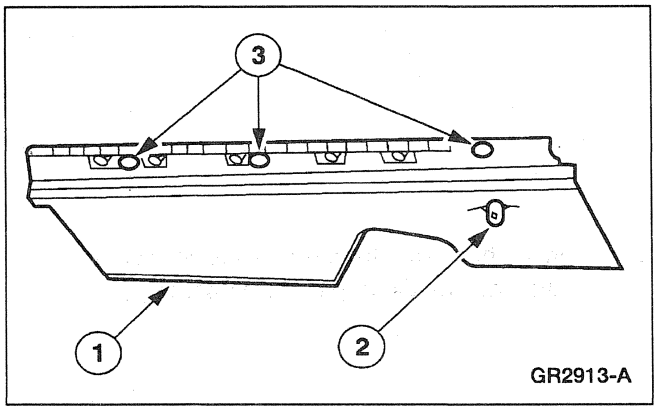

16. Install the RH instrument panel insulator.
    1 Position the instrument panel insulator.
    2 Install the courtesy lamp.
    3 Install the pushpins.

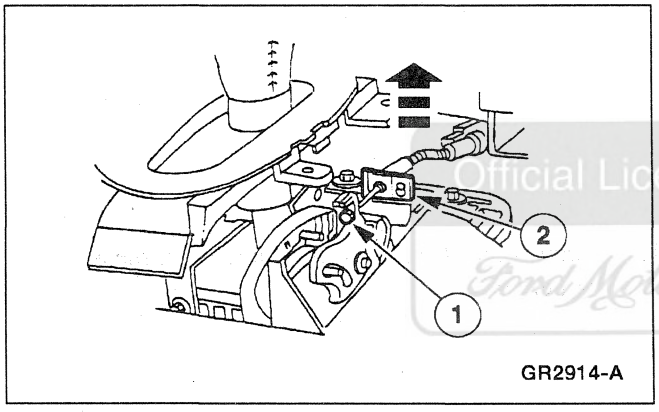

17. Connect the ignition/shifter interlock cable.
    1 Insert the ignition/shifter interlock cable into the pawl.
    2 Insert the ignition/shifter interlock cable into the gear shift selector housing bracket.

Official Licensed Product
Ford Motor Company

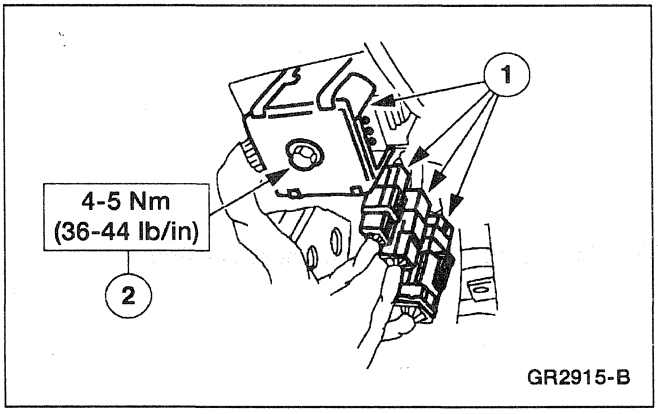

18. Connect the LH wiring harness connectors.
    1 Connect the LH wiring harness connectors.
    2 Tighten the bulkhead electrical connector bolt.

REMOVAL AND INSTALLATION (Continued)

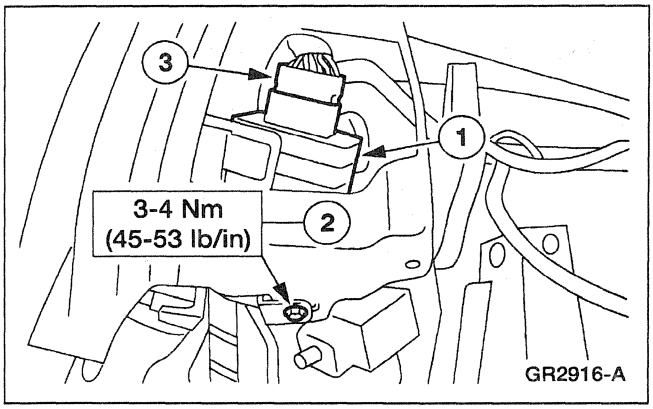

19. Install the windshield wiper control module and bracket.
    1 Install the windshield wiper control module and bracket.
    2 Install the screw.
    3 Connect the electrical connector.

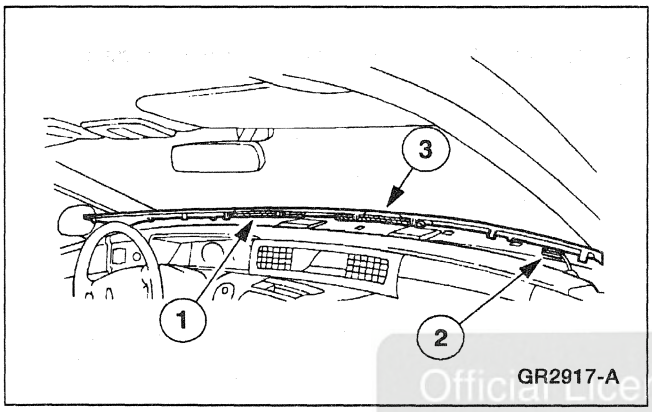

20. Install the instrument panel defroster opening grille.
    1 Position the instrument panel defroster opening grille.
    2 Connect the A/C sunload sensor electrical connector.
    3 Install the instrument panel defroster opening grille.

Official Licensed Product
Ford Motor Company

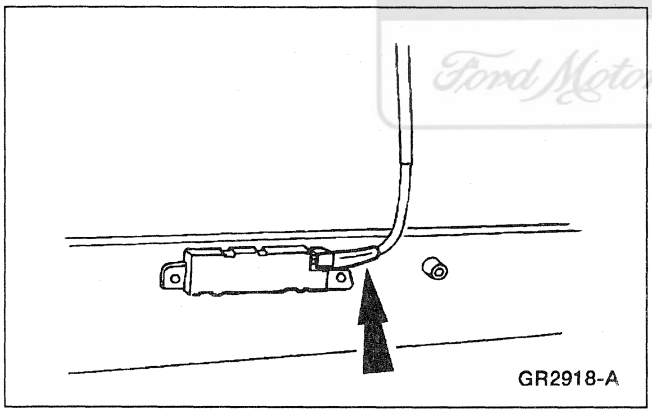

21. If equipped, on LH roof side inner front moulding, connect the mobile phone speaker electrical connector.

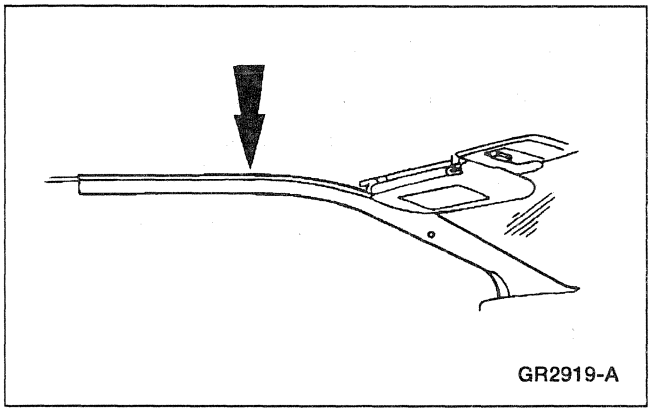

22. Install the LH and RH roof side inner front mouldings.

REMOVAL AND INSTALLATION (Continued)

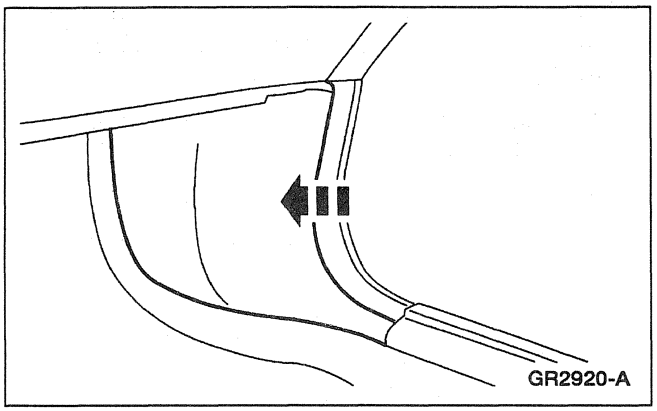

23. Install the LH and RH cowl side trim panels.

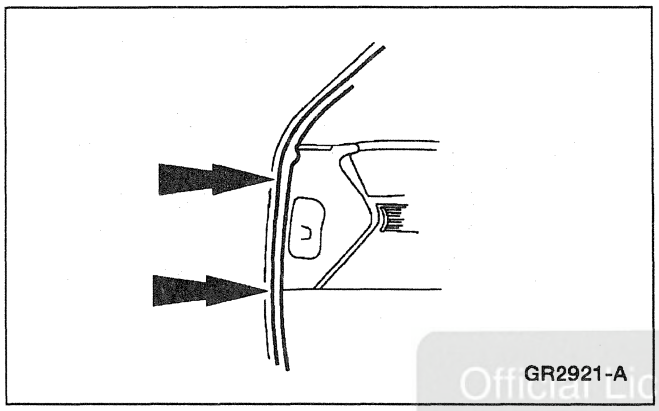

24. Install the LH and RH front door weatherstrips.

Official Licensed Product
Ford Motor Company

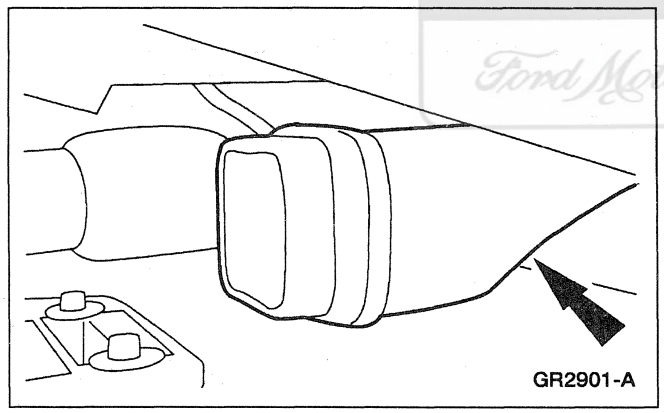

25. Install the heater outlet duct.

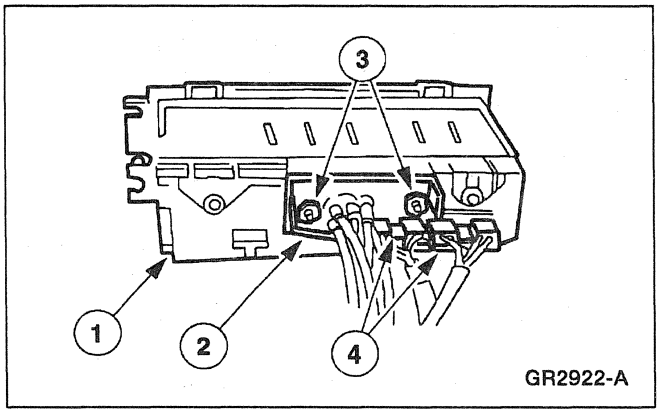

26. Position the EATC module.
    1 Position the EATC module.
    2 Connect the vacuum harness.
    3 Install the nuts.
    4 Connect the electrical connectors.

REMOVAL AND INSTALLATION (Continued)

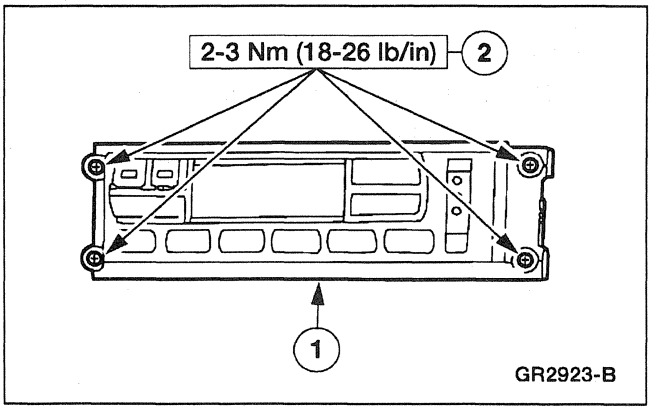

27. Install the EATC module.
    1 Install the EATC module.
    2 Install the screws.

28. Install the radio chassis; refer to Section 415-01.

29. Install the floor console; refer to Console — Floor.

30. Install the steering column; refer to Section 211-04.

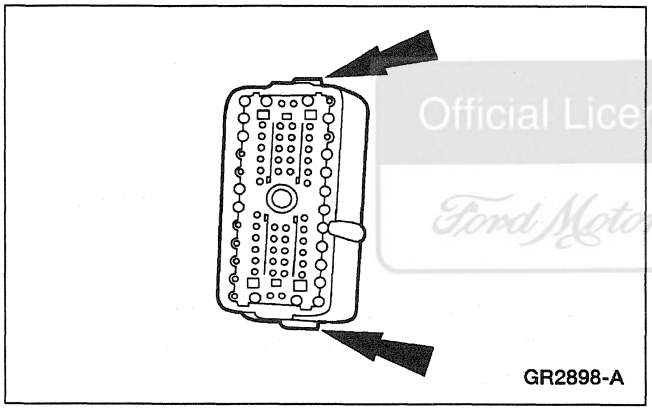

Official Licensed Product
Ford Motor Company

31. Clip the LH bulkhead electrical connector into the dash panel.

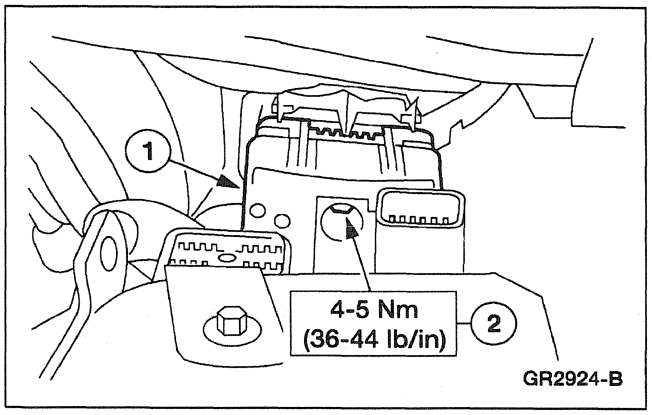

32. Connect the LH bulkhead electrical connector
    1 Connect the LH bulkhead electrical connector.
    2 Tighten the bolt.

REMOVAL AND INSTALLATION (Continued)

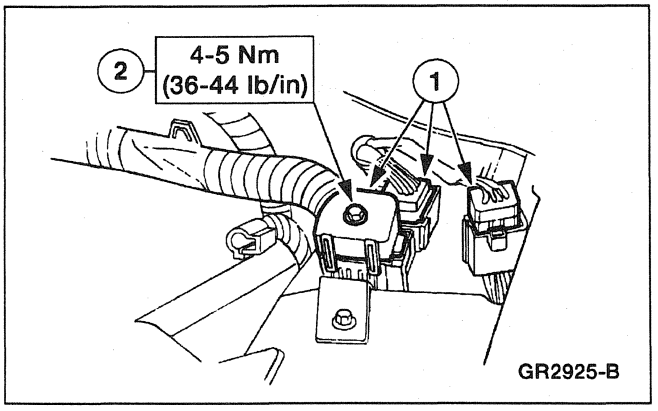

33. Connect the LH electrical connectors.
    1 Connect the LH electrical connectors.
    2 Tighten the bolt.

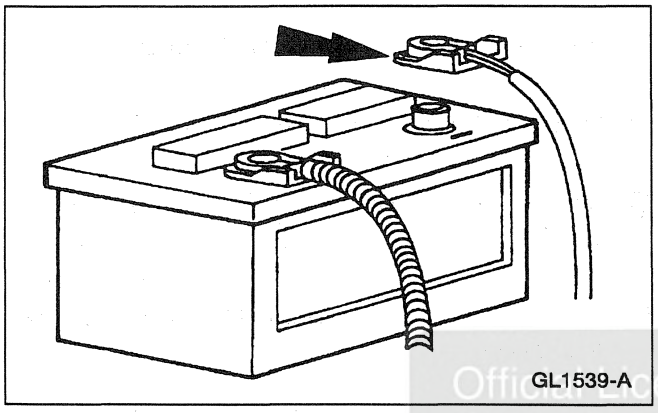

34. **NOTE:** When the battery is disconnected and reconnected, some abnormal drive symptoms may occur while the vehicle relearns its adaptive strategy. The vehicle may need to be driven 16 km (10 mi) or more to relearn the strategy.
    Connect the battery ground cable.

Officially Licensed Product
Ford Motor Company

35. Raise and support the vehicle; refer to Section 100-02.

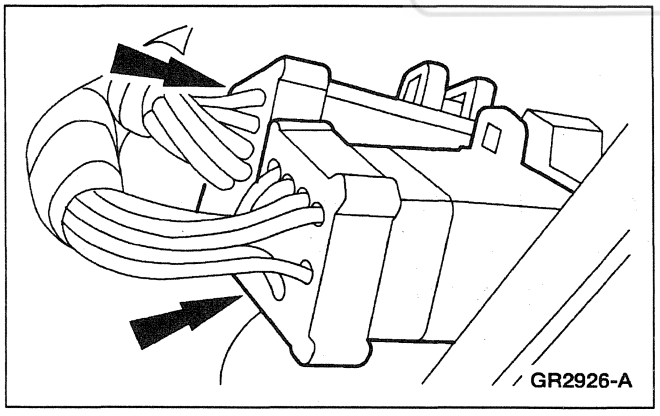

36. Connect the transmission wiring harness connectors located on the transmission crossmember.

37. **NOTE:** Reactivate the air suspension system by turning on the air suspension switch.
    Lower the vehicle.

REMOVAL AND INSTALLATION (Continued)

Console — Floor

Removal

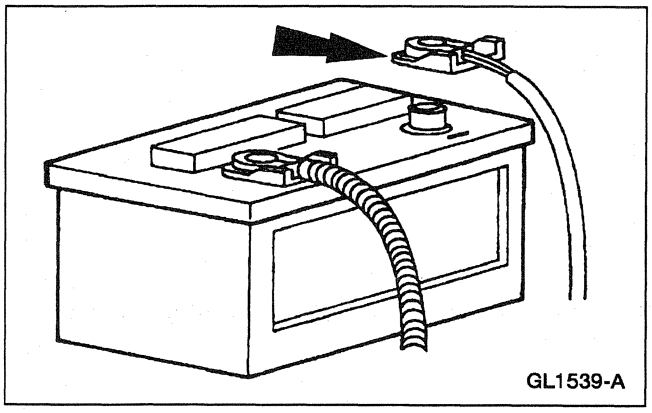

1. Disconnect the battery ground cable (14301).

2. Remove the instrument panel center finish panel; refer to Instrument Panel — Center Finish Panel.

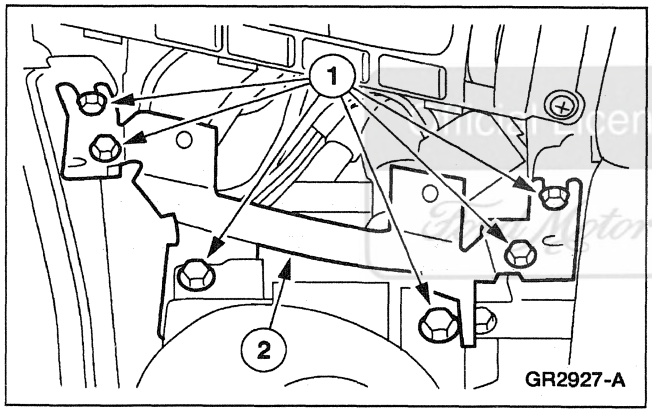

3. Remove the floor console support bracket.
   1 Remove the screws.
   2 Remove the floor console support bracket.

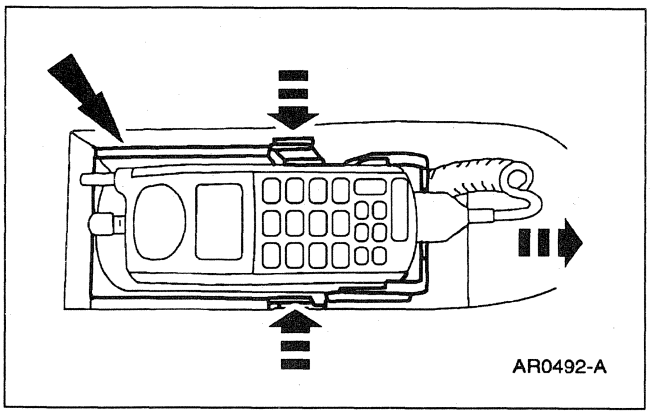

4. If equipped, remove the mobile phone and bracket.

Ford Motor Company Licensed Product

REMOVAL AND INSTALLATION (Continued)

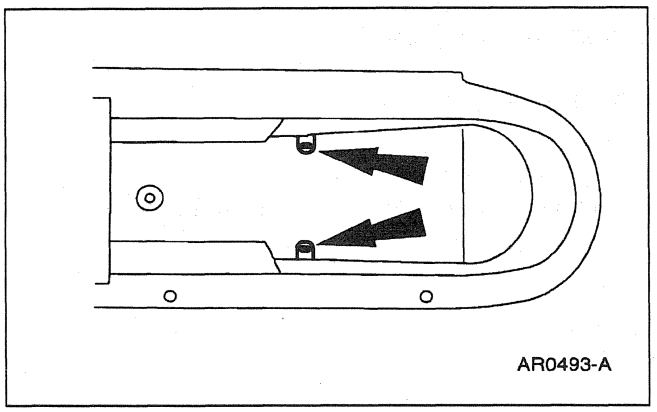

5. Remove the floor console rear screws.

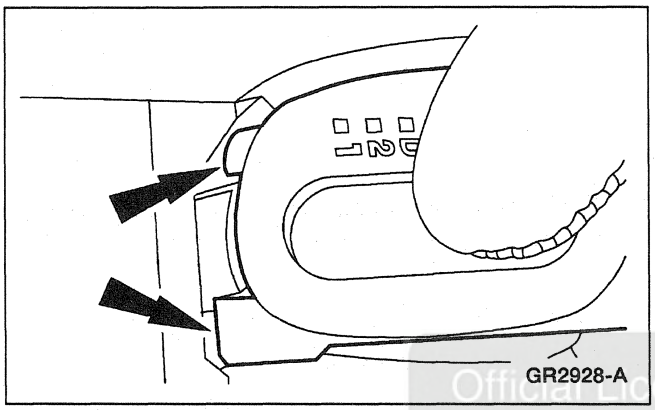

6. Unclip the gear shift selector housing from the floor console.

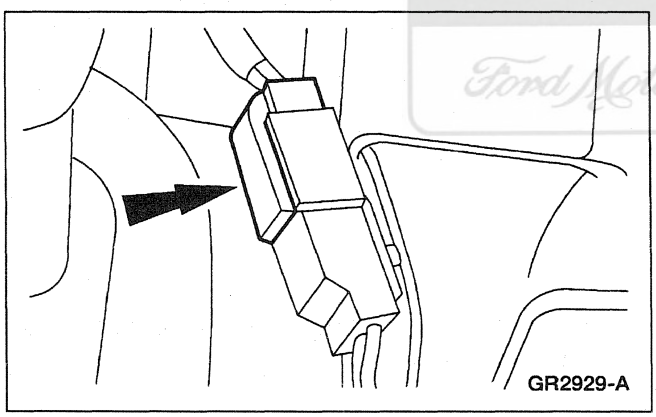

7. Disconnect the wiring harness connectors.
   - If equipped, disconnect the mobile phone coaxial cable.

8. Remove the floor console from the vehicle.

Official Licensed Product
Ford Motor Company

REMOVAL AND INSTALLATION (Continued)

Installation

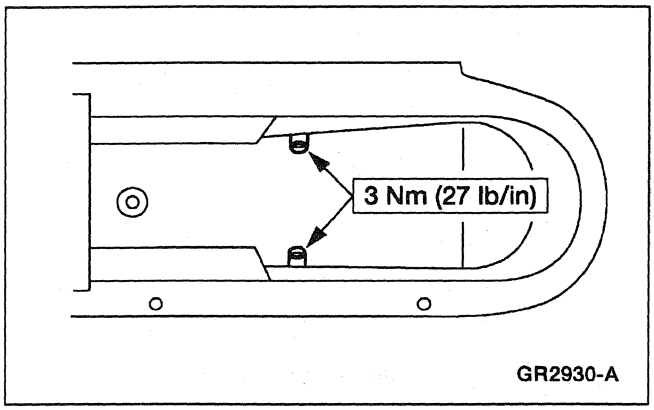

1. To install, reverse the removal procedure.

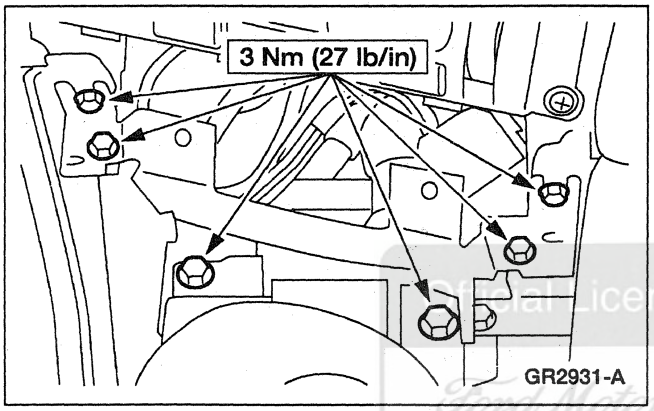

Official Licensed Product
Ford Motor Company

Glove Compartment

Removal

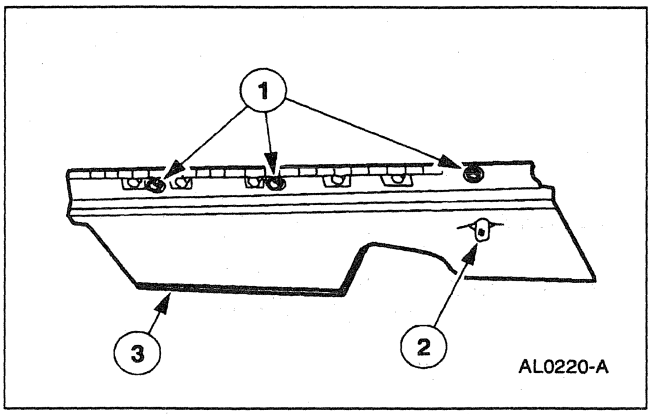

1. Remove the RH instrument panel insulator (046A24).
   1 Remove the pushpins.
   2 Remove the courtesy lamp.
   3 Remove the RH instrument panel insulator.

REMOVAL AND INSTALLATION (Continued)

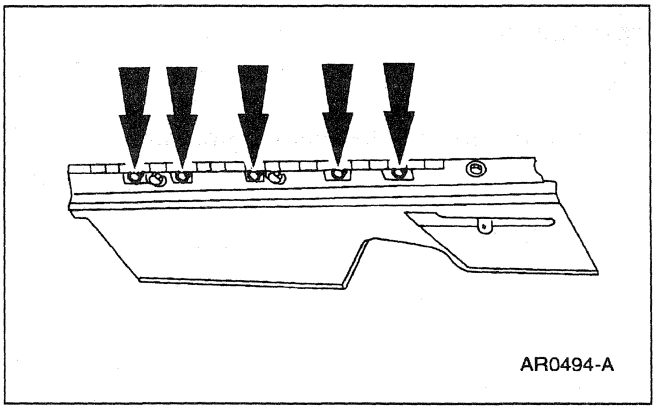

2. Remove the glove compartment hinge screws.

3. Open the glove compartment (06010).

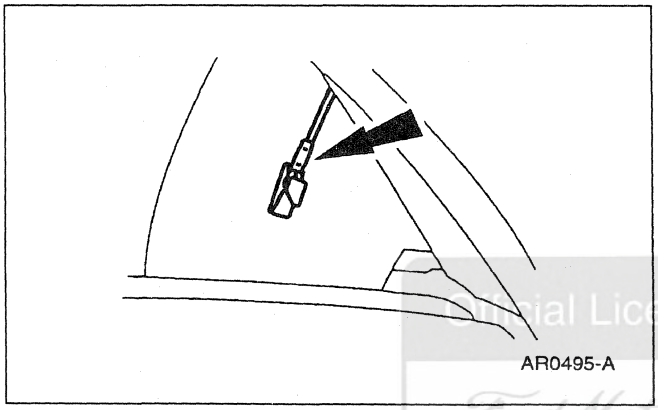

4. Disconnect the glove compartment assist cable.

Official Licensed Product
Ford Motor Company

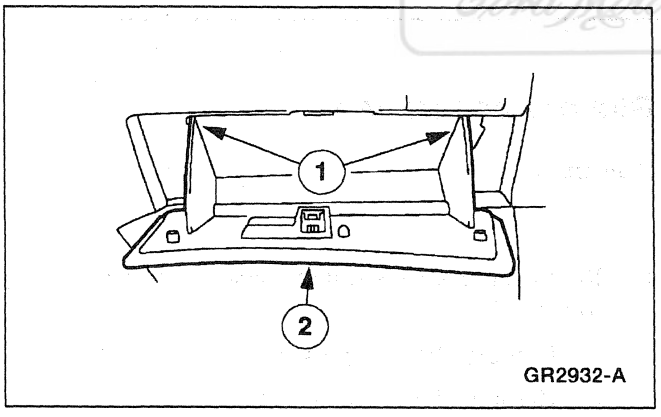

5. Remove the glove compartment.
   1 Push in the sides of the glove compartment to release the glove compartment door stops.
   2 Remove the glove compartment.

Installation

1. To install, reverse the removal procedure.

SPECIFICATIONS

Torque Specifications

Description	Nm	Lb/Ft	Lb/In
Bulkhead Electrical Connector Bolts	4-5	—	36-44
Electronic Automatic Temperature Control Module Screws	2-3	—	18-26
Floor Console Rear Screws	3	—	27
Floor Console Support Bracket Screws	3	—	27
Instrument Panel Center Support Nuts	10-14	8-10	—
Instrument Panel Cowl Side Nuts	54-72	40-52	—

(Continued)

Torque Specifications

Description	Nm	Lb/Ft	Lb/In
Instrument Panel Cowl Top Bolts	6-8	—	54-70
Instrument Panel Lower Center Finish Panel Screws	3	—	27
Instrument Panel to Floor Bracket Bolts	26-34	20-24	—
Steering Column Nuts	34-46	26-33	—
Windshield Wiper Control Module and Bracket Screw	3-4	—	45-53

Official Licensed Product
Ford Motor Company

SECTION 501-14A Handles, Locks, Latches and Mechanisms

VEHICLE APPLICATION: Mark VIII

SUBJECT	PAGE
DESCRIPTION AND OPERATION	
Handles, Locks, Latches and Mechanisms	501-14A-2
DIAGNOSIS AND TESTING	
Locks, Latches and Mechanisms	501-14A-3
Inspection and Verification	501-14A-3
Pinpoint Tests	501-14A-9
Symptom Chart	501-14A-8
REMOVAL AND INSTALLATION	
Handle — Outside Door	501-14A-39
Latch — Door	501-14A-36
Latch — Luggage Compartment Door	501-14A-38
Latch Remote Control — Fuel Filler Door	501-14A-43
Lock Cylinder — Door	501-14A-41
Lock Cylinder — Luggage Compartment Door	501-14A-42
SPECIFICATIONS	501-14A-44

Official Licensed Product
Ford Motor Company

DESCRIPTION AND OPERATION

Handles, Locks, Latches and Mechanisms

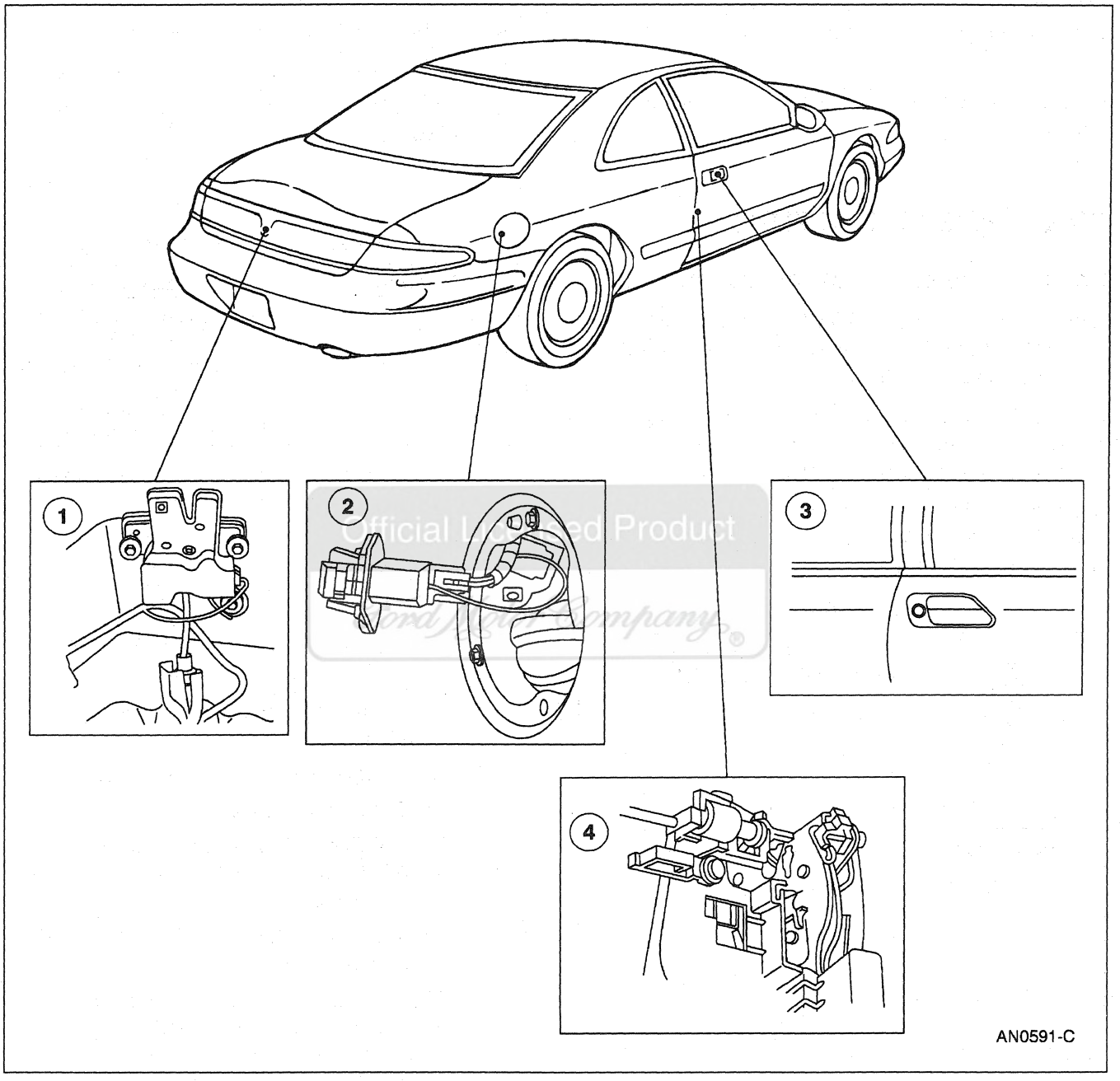

Item	Part Number	Description
1	43282	Luggage Compartment Door Latch
2	28610	Fuel Filler Door Latch

(Continued)

Item	Part Number	Description
3	22404	Door Handle (Outside RH)
4	21812	Front Door Latch

DESCRIPTION AND OPERATION (Continued)

Locks—Power

Refer to Section 501-14B.

Latch—Luggage Compartment Remote Release

The glove/luggage compartment lock cylinder (43507) :

- is mounted on the driver side front door trim panel (23943).
- sends a signal to the driver door module which actuates a solenoid integral to the luggage compartment door latch (43200).

Latch—Fuel Filler Door Release

The fuel filler door lock switch (9B242) :

- is located on the driver side front door trim panel.
- actuates a solenoid integral to the fuel filler door latch (28610).

DIAGNOSIS AND TESTING

Locks, Latches and Mechanisms

Refer to Electrical and Vacuum Troubleshooting Manual, Cell 113, Trunk Lid Release for schematic and connector information.

Refer to Electrical and Vacuum Troubleshooting Manual, Cell 116, Fuel Filler Door Release for schematic and connector information.

Refer to Electrical and Vacuum Troubleshooting Manual, Cell 57, Driver's Door Module for schematic and connector information.

Special Tool(s)

ST1137-A	73 Digital Multimeter 105-R0051 or equivalent
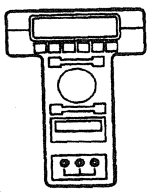 ST1217-A	New Generation Star (NGS) Tester 418-F048 (007-00500) or equivalent

Inspection and Verification

1. Verify the customer's concern by operating the luggage compartment door release/fuel door release to duplicate the concern.
2. Inspect to determine if one of the following mechanical or electrical concerns apply:

Visual Inspection Chart

Mechanical	Electrical
• Binding Latch or Lock Mechanisms	• Open power distribution box Fuse 28 (30A) • Open fuse junction panel Fuse 41 (10A) • Loose connectors • Corroded connectors

3. If the inspection reveals obvious concerns that can be readily identified, repair as required.
4. If the concern remains after the inspection, connect the Rotunda New Generation Star (NGS) Tester to the data link connector (DLC) located beneath the instrument panel and select the vehicle to be tested from the NGS menu. If the NGS does not communicate with the vehicle:
   1 check that the program card is properly installed.
   2 check the connections to the vehicle.
   3 check the ignition switch position.

   If the NGS still does not communicate with the vehicle, refer to the New Generation Star Tester manual.
5. Perform the DATA LINK DIAGNOSTIC TEST using the NGS. If the NGS responds with:
   1 CKT 914 and CKT 915 = ALL MODULES NO RESPONSE/NOT EQUIPPED, go to Communication System Diagnostics in Section 418-00 to diagnose the network concern.
   2 NO RESPONSE/NOT EQUIPPED for driver door module (DDM), go to Pinpoint Test A.

Unlicensed Product Ford Motor Company

DIAGNOSIS AND TESTING (Continued)

3 NO RESPONSE/NOT EQUIPPED for steering column/ignition/lighting control module (SCIL), go to Pinpoint Test B.

4 SYSTEM PASSED for the DDM, retrieve and record the continuous diagnostic trouble codes (DTCs), erase the continuous DTCs, then execute Self Test Diagnostics for the DDM.

5 SYSTEM PASSED for the SCIL, retrieve and record the continuous diagnostic trouble codes (DTCs), erase the continuous DTCs, then execute Self Test Diagnostics for the SCIL.

6. If the DDM DTCs retrieved are related to the concern, go to the Driver Door Module (DDM) Diagnostic Trouble Code (DTC) Index to continue diagnostics.

   If the SCIL DTCs retrieved are related to the concern, go to the Steering Column/Ignition/Lighting Control Module (SCIL) Diagnostic Trouble Code (DTC) Index to continue diagnostics.

7. If no DTCs related to the concern are retrieved, go to the Symptom Chart to continue diagnostics.

DRIVER DOOR MODULE (DDM) DIAGNOSTIC TROUBLE CODE (DTC) INDEX

DTC	Description	DTC Caused By	Action to Take
B1322	Door Ajar LF Circuit Short to Ground	DDM	GO to Section 417-02.
B1342	ECU Defective	DDM	GO to Section 501-09.
B1396	Power Door Lock Circuit Short to B+	DDM	GO to Section 501-14B.
B1525	Keyless Entry Circuit Short to B+	DDM	GO to Section 501-14B.
B1529	Memory Set Switch Circuit Short to Battery	DDM	GO to Section 501-09.
B1539	Mirror Driver Switch Assembly Circuit Failure	DDM	GO to Section 501-09.
B1549	Power Window Master Circuit Short to Battery	DDM	GO to Section 501-11.
B1554	Decklid Release Circuit Short to Ground	DDM	GO to **DTC B1554**.
B1676	Battery Voltage Out of Range	DDM	GO to **DTC B1676**.
U1041	SCP Invalid or Missing Data for Vehicle Speed	ABS	GO to Section 206-09, Inspection and Verification to continue diagnosis.
U1059	SCP Invalid or Missing Data for Transmission/Transaxle/ PRDNL	PCM	REFER to the Powertrain Control/Emissions Diagnosis Manual [1].
U1117	SCP Invalid or Missing Data for Electrical Energy Management	SCIL	GO to Section 501-11, Inspection and Verification to continue diagnosis.
U1135	SCP Invalid or Missing Data for Ignition Switch/Starter	SCIL	GO to Section 501-12, Inspection and Verification to continue diagnosis.
U1196	SCP Invalid or Missing Data for Door Locks	SCIL	GO to Section 419-01A, Inspection and Verification to continue diagnosis.
U1199	SCP Invalid or Missing Data for External Access (Doors)	SCIL	GO to Section 417-02, Inspection and Verification to continue diagnosis.

1 Can be purchased as a separate item.

DIAGNOSIS AND TESTING (Continued)

DRIVER DOOR MODULE (DDM) PARAMETER IDENTIFICATION (PID) INDEX

Display	Description	PID Content
CCNT__DD	Number of Continuous DTCs on DDM	one count per bit
KEYCODE	Keyless Entry Factory Code	5 digit no. encoded, INVLD
D__DR__DD	Driver Front Door Ajar Switch	AJAR CLOSED
DLIDRLS	Deck Lid Release Switch	ON OFF
D__PW__SW	Driver Power Window Switch	UPDOWN OFF SHORT
OTD__SW	One Touch Down Switch	OFF DOWN
DR__LOCK	Door Lock Output State	SHORT LOCK UNLOCK OFF
D__WINDO	Driver's Front Window	DOWN notDWN
MEM__OFF	Memory Off Switch	ACTIVE notACT
MEM2__SW	Memory Recall Switch No. 2	OFF ON
MEM1__SW	Memory Recall Switch No. 1	OFF ON
MIR__SEL	Power Mirror Select Switch	PSSNGR DRIVER
MIRV__SW	Power Mirror Position Switch - Vertical	SHORT DOWN UP OFF
MIRH__SW	Power Mirror Position Switch - Horizontal	SHORT RIGHT LEFT OFF
KEY__PAD	Keyless Entry Switch	1/2, 3/4, 5/6, 7/8, 9/0

DRIVER DOOR MODULE (DDM) ACTIVE COMMAND INDEX

Active Command	Display	Action
PID Latch	PIDLATCH	ON OFF
Memory Seat LED Control	LED STATE	ON OFF
Keypad Backlighting	LIGHT	ON OFF

(Continued)

DRIVER DOOR MODULE (DDM) ACTIVE COMMAND INDEX

Active Command	Display	Action
Front Window Control	DD DOWN	ON OFF
Door Lock Control	LOCK	ON OFF
	UNLOCK	ON OFF
DD UNLOCK	DD UNLOCK	ON OFF

Official Licensed Product Ford Motor Company

STEERING COLUMN/IGNITION/LIGHTING (SCIL) CONTROL MODULE DIAGNOSTIC TROUBLE CODE (DTC) INDEX

DTC	Description	DTC caused by	Action to Take
C1446	Brake Switch Circuit Failure	SCIL	GO to Section 206-05.
B1246	Panel Dim Potentiometer Switch Circuit Failure	SCIL	GO to Section 417-02.
B1312	Lamp Headlamp Input Circuit Short to Battery	SCIL	GO to Section 417-01.
B1334	Luggage Compartment Door Ajar Circuit Short to Ground	SCIL	GO to Section 417-02.
B1342	ECU Defective	SCIL	GO to Section 417-01.
B1353	Ignition Key-In Circuit Open	SCIL	GO to Section 501-12.
B1360	Ignition RUN/ACC Circuit Open	SCIL	GO to Section 501-12.
B1364	Ignition START Circuit Open	SCIL	GO to Section 501-12.
B1446	Wiper Park Sense Circuit Failure	SCIL	GO to Section 417-01.
B1485	Brake Pedal Input Circuit Short to B+	SCIL	GO to Section 417-01.

(Continued)

DIAGNOSIS AND TESTING (Continued)

STEERING COLUMN/IGNITION/LIGHTING (SCIL) CONTROL MODULE DIAGNOSTIC TROUBLE CODE (DTC) INDEX

DTC	Description	DTC caused by	Action to Take
B1509	Flash-to-Pass Switch Circuit Short to Battery	SCIL	GO to Section 417-01.
B1522	Hood Switch Circuit Short to Ground	SCIL	GO to Section 419-01A.
B1562	Door Lock Cylinder Circuit Short to Ground	SCIL	GO to Section 419-01A.
B1566	Door Ajar Circuit Short to Ground	SCIL	GO to Section 417-02.
B1600	PATS Ignition Key Transponder Signal Is Not Received	SCIL	GO to Section 419-01B.
B1601	PATS Received Incorrect Key Code from Ignition Key Transponder	SCIL	GO to Section 419-01B.
B1676	Battery Voltage Out of Range	SCIL	GO to Section 417-01.
B1682	PATS is Disabled (Check Link Between PATS and Transponder)	SCIL	GO to Section 419-01B.
B1687	Lamp Dome Input Circuit Short to Battery	SCIL	GO to Section 417-02.
B1689	Autolamp Delay Circuit Failure	SCIL	GO to Section 417-01.
B1796	Lamp Headlamp Low Beam Circuit Short to Battery	SCIL	GO to Section 417-01
B1875	Turn Signal/Hazard Switch Signal Circuit Failure	SCIL	GO to Section 417-01.
B1980	Bulb Outage Condition Detected	SCIL	GO to Section 417-01.
B2328	Steering Column Reach Feedback Potentiometer Circuit Failure	SCIL	GO to Section 211-05.
B2332	Steering Column Tilt Feedback Potentiometer Circuit Failure	SCIL	GO to Section 211-05.
B2351	Steering Column Switch Signal Circuit Failure	SCIL	GO to Section 211-05.
U1027	SCP Invalid or Missing Data for Engine RPM	PCM	REFER to the Powertrain Control/Emissions Diagnosis Manual [2].
U1041	SCP Invalid or Missing Data for Vehicle Speed	ABS	GO to Section 206-09, Inspection and Verification to continue diagnosis.
U1057	SCP Invalid or Missing Data for Vehicle Configuration	SCIL	GO to Section 417-01, Inspection and Verification to continue diagnosis.
U1059	SCP Invalid or Missing Data for Transmission/Transaxle/PRNDL	PCM	REFER to the Powertrain Control/Emissions Diagnosis Manual [2].
U1123	SCP Invalid or Missing Data for Odometer	ABS	GO to Section 206-09, Inspection and Verification to continue diagnosis.
U1147	SCP Invalid or Missing Data for Vehicle Security	PCM	PERFORM J1850 Communication Network Diagnostics. GO to Communication Network Diagnostics in Section 418-00.
U1180	SCP Invalid or Missing Data for Personalization (Memory) Features	DDM	GO to Section 501-09, Inspection and Verification to continue diagnosis.
U1181	SCP Invalid or Missing Data for Personalization (Memory) Features	DDM	GO to Section 501-09, Inspection and Verification to continue diagnosis.
U1197	SCP Invalid or Missing Data for Door Locks	DDM	GO to Section 501-14B, Inspection and Verification to continue diagnosis.

(Continued)

2 Can be purchased as a separate item.

DIAGNOSIS AND TESTING (Continued)

STEERING COLUMN/IGNITION/LIGHTING (SCIL) CONTROL MODULE DIAGNOSTIC TROUBLE CODE (DTC) INDEX

DTC	Description	DTC caused by	Action to Take
U1198	SCP Invalid or Missing Data for External Access (Doors)	DDM	GO to Section 501-14B, Inspection and Verification to continue diagnosis.
U1199	SCP Invalid or Missing Data for External Access (Doors)	DDM	GO to Section 417-02, Inspection and Verification to continue diagnosis.
U1211	SCP Invalid or Missing Data for Restraints	DSM	GO to Section 413-08, Inspection and Verification to continue diagnosis.
U1222	SCP Invalid or Missing Data for Interior Lamps	DDM	GO to Section 501-14B, Inspection and Verification to continue diagnosis.

STEERING COLUMN/IGNITION/LIGHTING (SCIL) CONTROL MODULE PARAMETER IDENTIFICATION (PID) INDEX

Display	Description	PID Content
CCNTSCI	Number of Continuous DTCs on SCIL	one count per bit
BOO__SCI	Brake Switch Input	ON OFF
PRK__BRK	Parking Brake Switch Input	ON OFF
TILT	Steering Column Tilt Switch	SHORT UP DOWN OFF
TELESCP	Steering Column Telescope Switch	SHORT IN OUT OFF
TILTPOS	Tilt Position Sensor	SENSED notSEN
TELEPOS	Telescope Position Sensor	SENSED notSEN
TURN__SW	Left and Right Turn Signal Switch	OFF LEFT RIGHT SHORT
LBEAMSW	Low Beam Switch	ON OFF
HBEAMSW	High Beam Switch	ON OFF
PARK__SW	Parking Switch	ON OFF
LIGHTSN	Ambient Light	DAY NIGHT
FLASH	Flash to Pass Switch	ON OFF
FTURN__L	Left and Right Front Turn Lamp	R__OPEN, L__OPEN, L/R__OPEN OK
RTURN__L	Left and Right Rear Turn Lamp	R__OPEN, L__OPEN, L/R__OPEN OK
TAILLMP	Left and Right Tail Lamp	OPEN OK
LOWBEAM	Low Beam Lamp	R__OPEN, L__OPEN, L/R__OPEN OK
AUTOLMP	Autolamp Switch	ON OFF
ALP__IMP	Autolamp Analog Input	0-100%
DOMESW	Dome Lamp Switch	ACTIVE notACT
PANLDIM	Panel Dim Intensity Switch	0-100%
HOOD__SW	Hood Ajar Switch	AJAR CLOSED
DECKLID	Decklid Ajar Switch	AJAR CLOSED
P__DR__SW	Passenger Door Ajar Switch	AJAR CLOSED
IGN__KEY	Ignition Key In/Out	IN OUT
IGN__SCI	Ignition Switch	START RUN OFF ACCSSY
WPPRKSW	Windshield Wiper Park Sense	notPRK PARKED

(Continued)

Unauthorized Product Ford Motor Company

DIAGNOSIS AND TESTING (Continued)

STEERING COLUMN/IGNITION/LIGHTING (SCIL) CONTROL MODULE PARAMETER IDENTIFICATION (PID) INDEX

Display	Description	PID Content
NUMKEYS	Number of Ignition Key Codes Supported	BCD (valid range 0-16)
DRLKCYL	Door Lock Cylinder	ON OFF
ENABLE	PATS System Status	ON OFF
FAILSAF	PATS System Status	ON OFF

STEERING COLUMN/IGNITION/LIGHTING (SCIL) CONTROL MODULE ACTIVE COMMAND INDEX

Active Command	Display	Function
PID Latch	PID LATCH	ON OFF
One Touch Window Dwn & Accy Delay	ACCY RLY	ON OFF
Warning Lamps and Chime	CHIME	ON OFF
	ANTI-THEFT	ON OFF
	HIGH BEAM	ON OFF
Illuminated Entry	MIRROR LAMP	ON OFF
	INT LAMPS	ON OFF
Decklid Release	RELEASE	ON OFF
Turn Signal and Marker Lamps	LF TURN	ON OFF
	RF TURN	ON OFF
	LR TURN	ON OFF
	RR TURN	ON OFF
	PARKLAMPS	ON OFF
Headlamp Control	LEFT LOW	ON OFF
	RIGHT LOW	ON OFF
	HIGH BEAM	ON OFF
	DRUM LAMP	ON OFF
	LF CORNER	ON OFF
	RF CORNER	ON OFF

(Continued)

STEERING COLUMN/IGNITION/LIGHTING (SCIL) CONTROL MODULE ACTIVE COMMAND INDEX

Active Command	Display	Function
Horn Control	HORN	ON OFF
Backlighting Intensity	INTENSITY	0%-100%
Courtesy Lamp Intensity	INTENSITY	0%-100%
Door Ajar Signal	DOOR AJAR	ON OFF
Transmit Signal Command	TRANSMIT	ON OFF
Brake System	BRK/SHIFT	ON OFF
Steering Column Control	PARK BRK	ON OFF
	TILT UP	ONE SECOND TIME OUT
	TILT DOWN	ONE SECOND TIME OUT
	TELSCP IN	ONE SECOND TIME OUT
	TELSCPOUT	ONE SECOND TIME OUT
Keycode Erase Time Set	MINUTES	8-63 MINUTES

Symptom Chart

Refer to the Electrical and Vacuum Troubleshooting Manual for the connector numbers cited in the Pinpoint Tests.

Ford Licensed Product Ford Motor Company

DIAGNOSIS AND TESTING (Continued)

SYMPTOM CHART

Condition	Possible Source	Action
• No Communication With the Driver Door Module	• Circuits. • Driver door module.	• GO to Pinpoint Test A.
• No Communication With the Steering Column/Ignition/Lighting Control Module	• Circuits. • Steering column/ignition/lighting control module.	• GO to Pinpoint Test B.
• The Luggage Compartment Door Does Not Lock	• Circuitry. • Actuators. • Driver door module. • Steering column/ignition/lighting control module.	• GO to Pinpoint Test C.
• The Luggage Compartment Door Does Not Unlock	• Circuitry. • Actuators. • Driver door module. • Steering column/ignition/lighting control module.	• GO to Pinpoint Test D.
• The Luggage Compartment Door Opens With the Vehicle In Motion	• Circuitry. • Actuators. • Driver door module. • Steering column/ignition/lighting control module.	• GO to Pinpoint Test E.
• The Fuel Filler Door Release is Inoperative	• Circuitry. • Actuators.	• GO to Pinpoint Test F.

Off-Lease Only Unauthorized Product
Ford Motor Company

Pinpoint Tests

DTC B1554: DECKLID RELEASE CIRCUIT—SHORT TO GROUND

TEST CONDITIONS	TEST DETAILS/RESULTS/ACTIONS
B1554-1 CHECK PID DLIDRLS	
1 DDM PID DLIDRLS	• Does the PID DLIDRLS read ON? → **Yes** GO to **B1554-3**. → **No** GO to **B1554-2**.

(Continued)

DIAGNOSIS AND TESTING (Continued)

DTC B1554: DECKLID RELEASE CIRCUIT—SHORT TO GROUND (Continued)

TEST CONDITIONS	TEST DETAILS/RESULTS/ACTIONS
B1554-2 REPEAT THE SELF TEST	
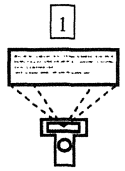 1 DDM Self Test	• Is DTC B1554 retrieved? → **Yes** REPLACE the driver door module. REPEAT the DDM self-test. → **No** EXECUTE the driver door module active command PIDLATCH while flexing the harness between the luggage compartment release switch and the driver door module. REPAIR the short to battery at the area where the PID DLIDRLS activates.
B1554-3 CHECK THE LUGGAGE COMPARTMENT DOOR RELEASE SWITCH	
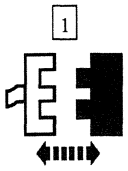 1 Luggage Compartment Door Release Switch C514 2 DDM PID DLIDRLS	• Does the PID DLIDRLS read ON? → **Yes** GO to **B1554-4.** → **No** REPLACE the luggage compartment door release switch. REPEAT the DDM self-test.

Official Licensed Product Ford Motor Company

(Continued)

DIAGNOSIS AND TESTING (Continued)

DTC B1554: DECKLID RELEASE CIRCUIT—SHORT TO GROUND (Continued)

TEST CONDITIONS	TEST DETAILS/RESULTS/ACTIONS
B1554-4 CHECK CIRCUIT 727 (Y/BK)	
1 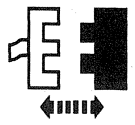 DDM Connector C455 2 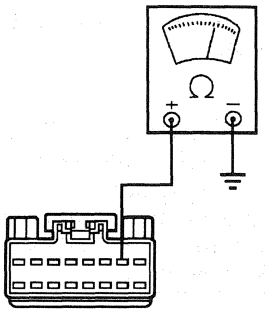 AR0631-A	2 Measure the resistance between the DDM connector Pin C455-7, Circuit 727 (Y/BK) and ground. • Is the resistance less than 10,000 ohms? → **Yes** REPAIR Circuit 727 (Y/BK) for a short to ground. REPEAT the DDM self-test. → **No** REPLACE the driver door module. REPEAT the DDM self-test.

Official Licensed Product Ford Motor Company

DTC B1676: BATTERY VOLTAGE OUT OF RANGE

TEST CONDITIONS	TEST DETAILS/RESULTS/ACTIONS
B1676-1 CHECK THE BATTERY FOR A LOW VOLTAGE LEVEL	
1 2 3 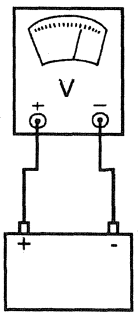 AR0650-A	2 Turn on all lights, blowers/fans and accessories. 3 Measure the voltage across the battery terminals. • Is the battery voltage less than 7 volts? → **Yes** PERFORM the generator output testing; REFER to Section 414-00. REPAIR as required. → **No** GO to **B1676-2**.

(Continued)

DIAGNOSIS AND TESTING (Continued)

DTC B1676: BATTERY VOLTAGE OUT OF RANGE (Continued)

TEST CONDITIONS	TEST DETAILS/RESULTS/ACTIONS
B1676-2 CHECK FOR A HIGH BATTERY VOLTAGE	
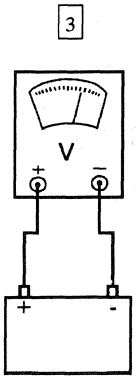 AR0650-A	1 Turn off all lamps, accessories and fans. 2 Start the engine and hold at 2000 rpm. 3 Measure the voltage across the battery terminals. • Is the voltage above 17 volts? → **Yes** REPAIR the charging system; REFER to Section 414-00. → **No** GO to **B1676-3.**
B1676-3 RERUN THE SELF TEST	
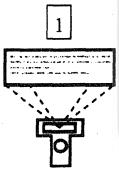 DDM Self Test	• Is DTC B1676 retrieved? → **Yes** REPLACE the driver door module. REPEAT the DDM self-test. → **No** The system is operating normally. CHECK the charging system operation; REFER to Section 414-00.

Official Licensed Product
Ford Motor Company

DIAGNOSIS AND TESTING (Continued)

PINPOINT TEST A: NO COMMUNICATION WITH THE DRIVER DOOR MODULE

TEST CONDITIONS	TEST DETAILS/RESULTS/ACTIONS
A1 CHECK THE POWER SUPPLY TO THE DRIVER DOOR MODULE	
1 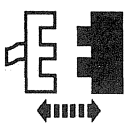 DDM Connector C457 2 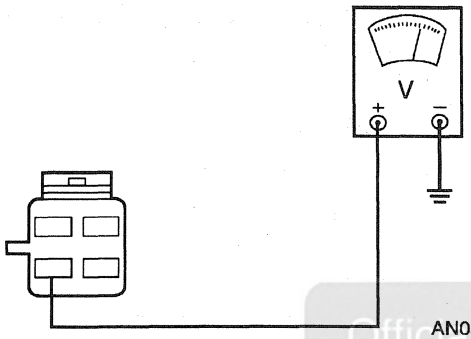 AN0359-B	2 Measure the voltage at the DDM connector Pin C457-3, Circuit 1077 (DG/P). • Is the voltage reading B+? → **Yes** GO to **A16**. → **No** GO to **A2**.
A2 CHECK CIRCUIT 1077 (DG/P) FOR AN OPEN	
1 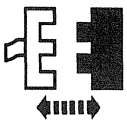 DDM Connector C455 2 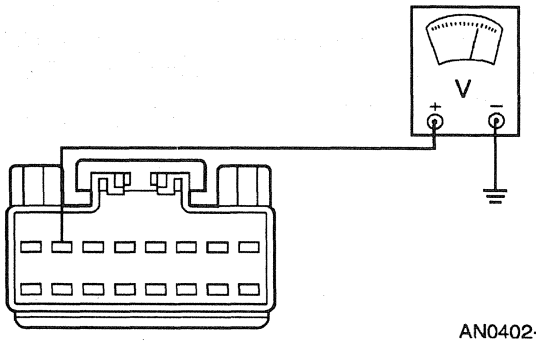 AN0402-B	2 Measure the voltage at the DDM connector Pin C455-2, Circuit 1077 (DG/P). • Is the voltage reading B+? → **Yes** REPAIR the Circuit 1077 (DG/P) for an open between the driver door module Connector C457 and the splice. REPEAT the Data Link Diagnostic Test. → **No** GO to **A3**.

Official Licensed Product
Ford Motor Company

(Continued)

DIAGNOSIS AND TESTING (Continued)

PINPOINT TEST A: NO COMMUNICATION WITH THE DRIVER DOOR MODULE (Continued)

TEST CONDITIONS	TEST DETAILS/RESULTS/ACTIONS
A3 CHECK FUSE JUNCTION PANEL FUSE 41 (10A)	
1 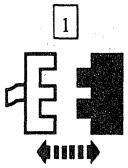 Fuse Junction Panel Fuse 41 (10A) 2 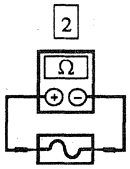 Fuse Junction Panel Fuse 41 (10A)	• Is Fuse 41 (10A) OK? → **Yes** REPAIR Circuit 1077 (DG/P) for an open. REPEAT the Data Link Diagnostic Test. → **No** GO to **A4**.
A4 CHECK FOR A SYSTEM SHORT	
1 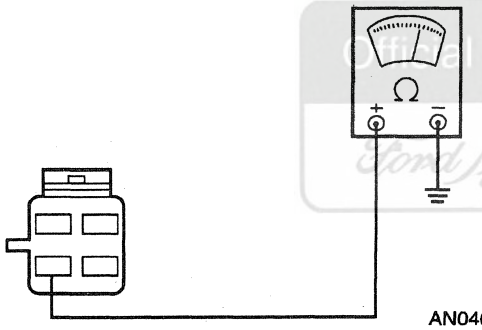	1 Measure the resistance between the DDM connector Pin C457-3, Circuit 1077 (DG/P) and ground. • Is the resistance 10 K ohms or less? → **Yes** GO to **A5**. → **No** GO to **A10**.

Official Licensed Product Ford Motor Company

(Continued)

DIAGNOSIS AND TESTING (Continued)

PINPOINT TEST A: NO COMMUNICATION WITH THE DRIVER DOOR MODULE (Continued)

TEST CONDITIONS	TEST DETAILS/RESULTS/ACTIONS
A5 CHECK THE LH DOOR LOCK SWITCH FOR A SHORT TO GROUND	
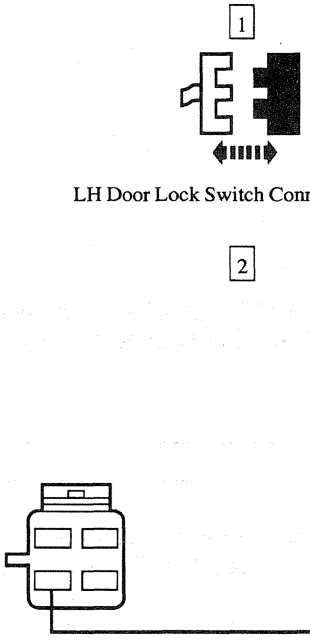	2 Measure the resistance between the DDM connector Pin C457-3, Circuit 1077 (DG/P) and ground. • Is the resistance 10 K ohms or less? → **Yes** GO to **A6**. → **No** REPLACE the LH front door lock switch. REPEAT the data link diagnostic test.
A6 CHECK THE RH DOOR LOCK SWITCH FOR A SHORT TO GROUND	
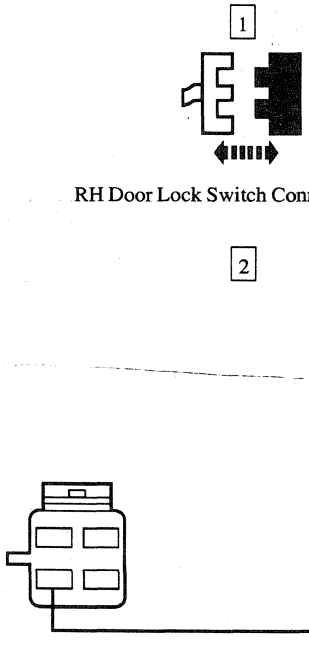	2 Measure the resistance between the DDM connector Pin C457-3, Circuit 1077 (DG/P) and ground. • Is the resistance 10 K ohms or less? → **Yes** GO to **A7**. → **No** REPLACE the RH front door lock switch. REPEAT the data link diagnostic test.

Official Licensed Product
Ford Motor Company

(Continued)

DIAGNOSIS AND TESTING (Continued)

PINPOINT TEST A: NO COMMUNICATION WITH THE DRIVER DOOR MODULE (Continued)

TEST CONDITIONS	TEST DETAILS/RESULTS/ACTIONS
A7 CHECK THE KEYLESS ENTRY KEYPAD FOR A SHORT TO GROUND	
1 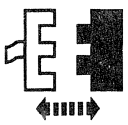 Keyless Entry Keypad Connector C510 2 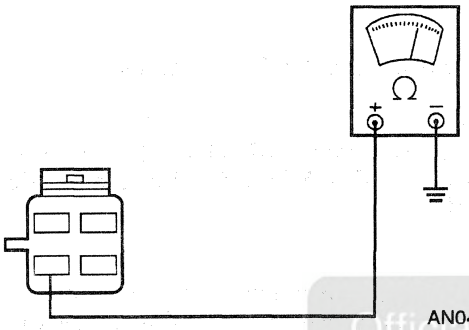 AN0403-B	2 Measure the resistance between the DDM connector Pin C457-3, Circuit 1077 (DG/P) and ground. • Is the resistance 10 K ohms or less? → **Yes** GO to **A8**. → **No** REPLACE the keyless entry keypad. REPEAT the data link diagnostic test.
A8 CHECK THE MEMORY OFF/RECALL SWITCH FOR A SHORT TO GROUND	
1 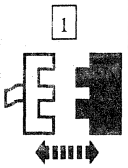 Memory Off/Recall Switch Connector C515 2 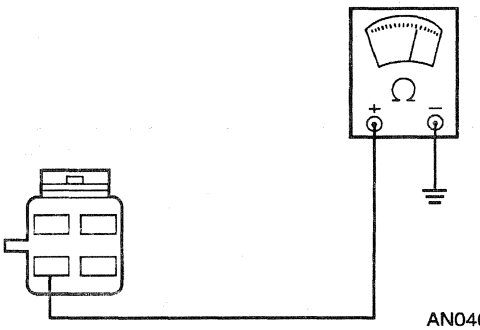 AN0403-B	2 Measure the resistance between the DDM connector Pin C457-3, Circuit 1077 (DG/P) and ground. • Is the resistance 10 K ohms or less? → **Yes** GO to **A9**. → **No** REPLACE the memory off/recall switch. REPEAT the data link diagnostic test.

Official Licensed Product
Ford Motor Company

(Continued)

DIAGNOSIS AND TESTING (Continued)

PINPOINT TEST A: NO COMMUNICATION WITH THE DRIVER DOOR MODULE (Continued)

TEST CONDITIONS	TEST DETAILS/RESULTS/ACTIONS
A9 CHECK THE OUTSIDE REAR VIEW MIRROR CONTROL SWITCH FOR A SHORT TO GROUND	
1 Outside Rear View Mirror Control Connector C500 2 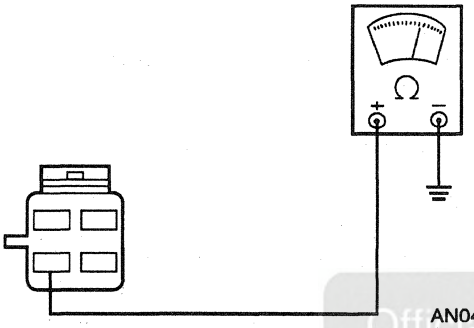 AN0403-B	2 Measure the resistance between the DDM connector Pin C457-3, Circuit 1077 (DG/P) and ground. • Is the resistance 10 K ohms or less? → **Yes** REPAIR Circuit 1077 (DG/P) for a short to ground. REPEAT the data link diagnostic test. → **No** REPLACE the outside rear view mirror control. REPEAT the data link diagnostic test.
A10 CHECK CIRCUIT 117 (PK/BK)	
1 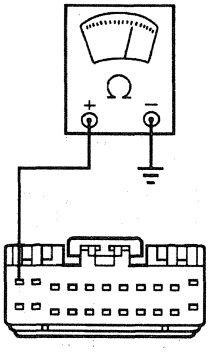 AK0943-B	1 Measure the resistance between the DDM connector Pin C456-1, Circuit 117 (PK/BK) and ground. • Is the resistance 10 K ohms or less? → **Yes** GO to **A11**. → **No** GO to **A13**.

(Continued)

Official Licensed Product Ford Motor Company

DIAGNOSIS AND TESTING (Continued)

PINPOINT TEST A: NO COMMUNICATION WITH THE DRIVER DOOR MODULE (Continued)

TEST CONDITIONS	TEST DETAILS/RESULTS/ACTIONS
A11 CHECK THE DRIVER DOOR LOCK ACTUATOR	
1 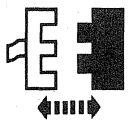 Driver Door Lock Actuator Connector C517 2 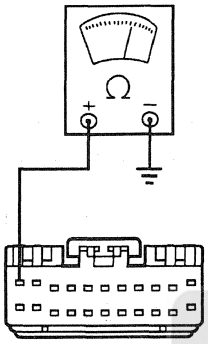 AK0943-B	2 Measure the resistance between the DDM connector Pin C456-1, Circuit 117 (PK/BK) and ground. • Is the resistance 10 K ohms or less? → **Yes** GO to **A12.** → **No** REPLACE the driver door lock actuator. REPEAT the data link diagnostic test.
A12 CHECK THE PASSENGER DOOR LOCK ACTUATOR	
1 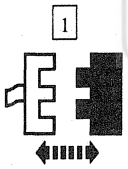 Passenger Door Lock Actuator Connector C610 2 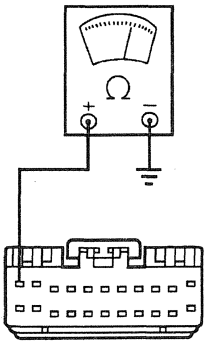 AK0943-B	2 Measure the resistance between the DDM connector Pin C456-1, Circuit 117 (PK/BK) and ground. • Is the resistance 10 K ohms or less? → **Yes** REPAIR Circuit 117 (PK/BK) for a short to ground. REPEAT the data link diagnostic test. → **No** REPLACE passenger door lock actuator. REPEAT the data link diagnostic test.

Official Licensed Product Ford Motor Company

(Continued)

DIAGNOSIS AND TESTING (Continued)

PINPOINT TEST A: NO COMMUNICATION WITH THE DRIVER DOOR MODULE (Continued)

TEST CONDITIONS	TEST DETAILS/RESULTS/ACTIONS
A13 CHECK CIRCUIT 119 (PK/Y) AND CIRCUIT 120 (PK/LG) FOR A SHORT TO GROUND	
1 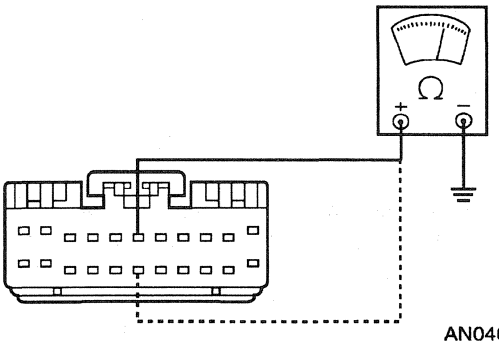 AN0404-B	1 Measure the resistance between ground and the DDM connector Pin C456-6, Circuit 119 (PK/Y), then Pin C456-17, Circuit 120 (PK/LG). • Is the resistance 10 K ohms or less on either circuit? → **Yes** REPAIR Circuit 119 (PK/Y) or Circuit 120 (PK/LG) for a short to ground. REPEAT the data link diagnostic test. → **No** GO to **A14**.
A14 CHECK FOR A SYSTEM SHORT	
1 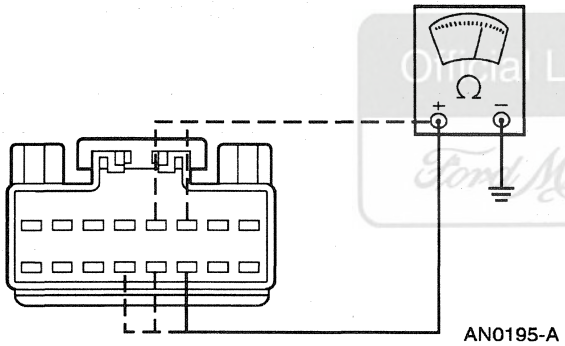 AN0195-A	1 Measure the resistance between ground and the following DDM connector Pins: — C455-14, Circuit 78 (LB/Y), — C455-6, Circuit 79 (LG/R), — C455-13, Circuit 121 (Y/BK), — C455-5, Circuit 122 (Y), — C455-12, Circuit 123 (R). • Is the resistance 10 K ohms or less on any circuit? → **Yes** REPAIR suspect circuit for a short to ground.REPEAT the data link diagnostic test. → **No** GO to **A15**.

Ford Motor Company Original Licensed

(Continued)

DIAGNOSIS AND TESTING (Continued)

PINPOINT TEST A: NO COMMUNICATION WITH THE DRIVER DOOR MODULE (Continued)

TEST CONDITIONS	TEST DETAILS/RESULTS/ACTIONS
A15 CHECK FOR A SYSTEM SHORT TO GROUND	
1 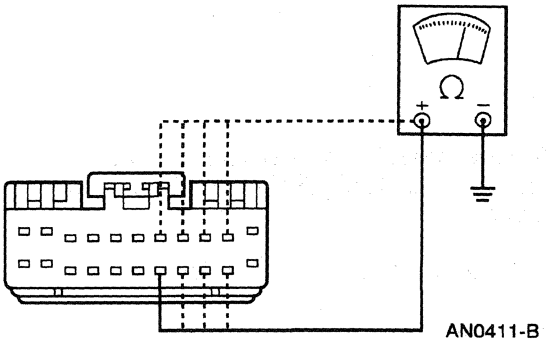 AN0411-B	1 Measure the resistance between ground and the following DDM connector Pins: — C456-18, Circuit 270 (BR/O), — C456-19, Circuit 267 (BR/LG), — C456-7, Circuit 268 (BK/O), — C456-20, Circuit 943 (P/O), — C456-21, Circuit 940 (DB/O), — C456-9, Circuit 942 (R/O), — C456-8, Circuit 944 (DG/O), — C456-10, Circuit 945 (Y/BK). • Is the resistance 10 K ohms or less on any circuit? → **Yes** REPAIR suspect circuit for a short to ground. REPEAT the data link diagnostic test. → **No** REPLACE fuse junction panel Fuse 41 (10A). REPLACE the driver door module. REPEAT the data link diagnostic test.
A16 CHECK THE POWER SUPPLY TO THE DRIVER DOOR MODULE CONNECTOR C455	
1 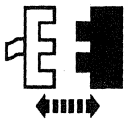 DDM Connector C455 2 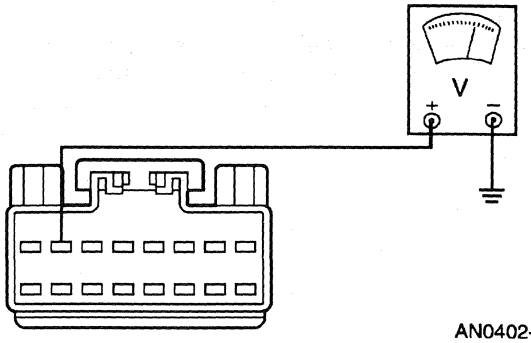 AN0402-B	2 Measure the voltage at the DDM connector Pin C455-2, Circuit 1077 (DG/P). • Is the voltage reading B+? → **Yes** GO to **A17**. → **No** REPAIR Circuit 1077 (DG/P) for an open between the driver door module connector C455 and the splice. REPEAT the data link diagnostic test.

Official Licensed Ford Motor Company

(Continued)

DIAGNOSIS AND TESTING (Continued)

PINPOINT TEST A: NO COMMUNICATION WITH THE DRIVER DOOR MODULE (Continued)

TEST CONDITIONS	TEST DETAILS/RESULTS/ACTIONS
A17 CHECK CIRCUIT 57 (BK) FOR AN OPEN	
1 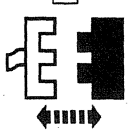 DDM Connector C456 2 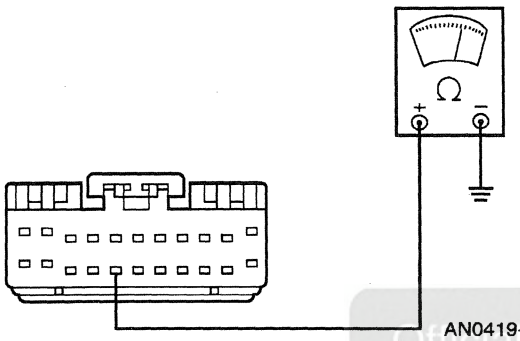 AN0419-B	2 Measure the resistance between the DDM connector Pin C456-16, Circuit 57 (BK) and ground. • Is the resistance 5 ohms or less? → **Yes** GO to **A18.** → **No** REPAIR Circuit 57 (BK) for an open. REPEAT the data link diagnostic test.
A18 CHECK CIRCUIT 875 (BK/LB) FOR AN OPEN	
1 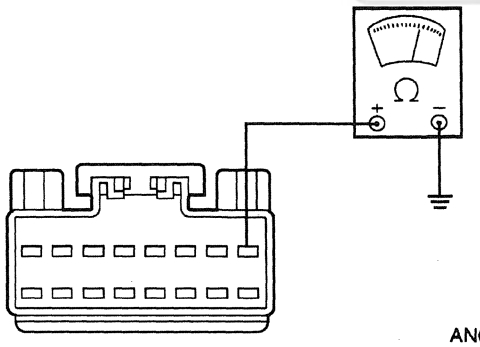 AN0420-B	1 Measure the resistance between the DDM connector Pin C455-8, Circuit 875 (BK/LB) and ground. • Is the resistance 5 ohms or less? → **Yes** GO to Section 418-00, Communication System Diagnostics, to diagnose network concern. → **No** REPAIR Circuit 875 (BK/LB) for an open. REPEAT the data link diagnostic test.

Official Licensed Product
Ford Motor Company

DIAGNOSIS AND TESTING (Continued)

PINPOINT TEST B: NO COMMUNICATION WITH THE STEERING COLUMN/IGNITION/LIGHTING (SCIL) CONTROL MODULE

TEST CONDITIONS	TEST DETAILS/RESULTS/ACTIONS
B1 CHECK CIRCUIT 875 (BK/LB) FOR AN OPEN	
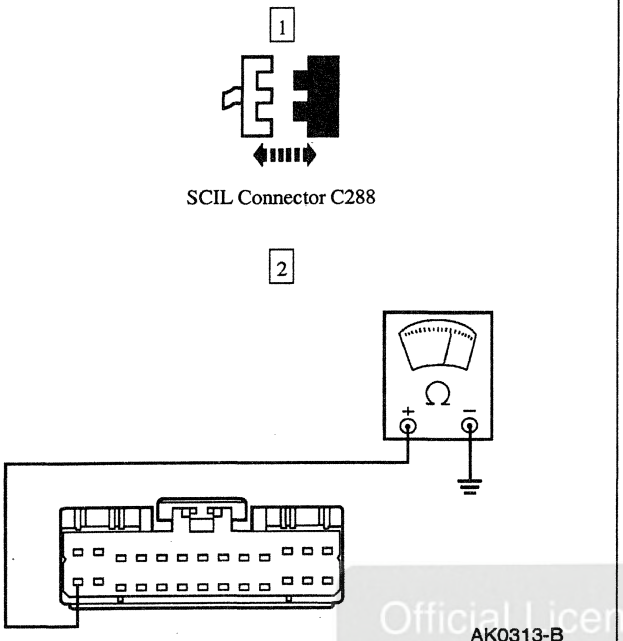	2 Measure the resistance between the steering column/ignition/lighting control module connector Pin C288-14, Circuit 875 (BK/LB) and ground. • Is the resistance 5 ohms or less? → **Yes** GO to **B2.** → **No** REPAIR Circuit 875 (BK/LB) for an open. REPEAT the data link diagnostic test.
B2 CHECK CIRCUIT 57 (BK) FOR AN OPEN	
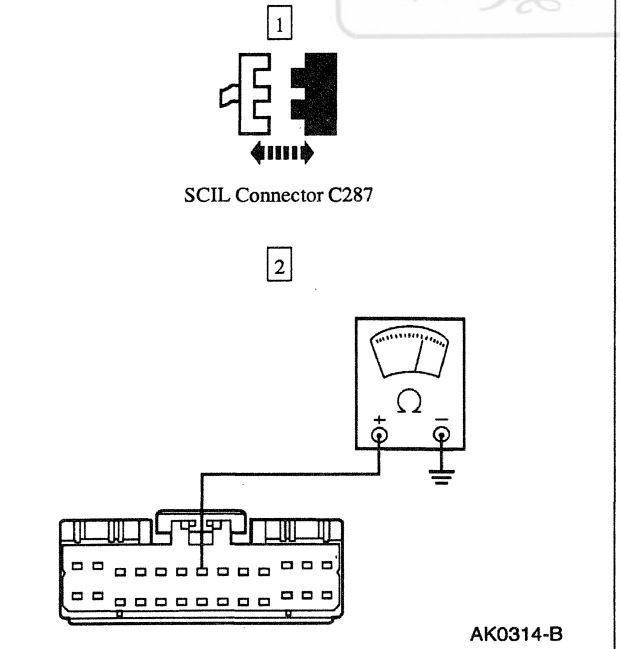	2 Measure the resistance between the steering column/ignition/lighting control module connector Pin C287-7, Circuit 57 (BK) and ground. • Is the resistance 5 ohms or less? → **Yes** GO to **B3.** → **No** REPAIR Circuit 57 (BK) for an open. REPEAT the data link diagnostic test.

Official Licensed Product Ford Motor Company

(Continued)

DIAGNOSIS AND TESTING (Continued)

PINPOINT TEST B: NO COMMUNICATION WITH THE STEERING COLUMN/IGNITION/LIGHTING (SCIL) CONTROL MODULE (Continued)

TEST CONDITIONS	TEST DETAILS/RESULTS/ACTIONS
B3 CHECK FOR B+ SUPPLY ON THE STEERING COLUMN/IGNITION/LIGHTING CONTROL MODULE CONNECTOR C287	
1 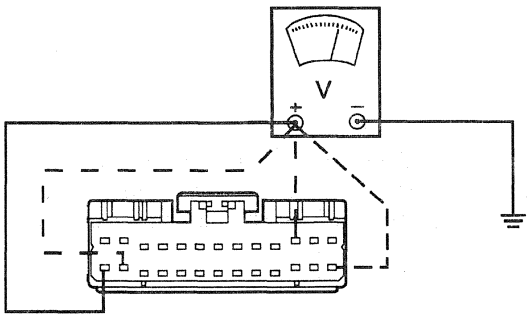 AK1260-A	1 Measure the voltage at each of the following steering column/ignition/lighting control module Connector C287 pins. Note the voltage reading at each pin: — C287-14, Circuit 906 (R/O) — C287-26, Circuit 19 (LB/R) — C287-15, Circuit 1055 (W/LG) — C287-11, Circuit 1056 (DB/LG) • Is the voltage reading on any circuit B+? → **Yes** GO to Communication Network Diagnostics in Section 418-00 to diagnose the network concern. → **No** For each suspect circuit, REFER to the Electrical and Vacuum Troubleshooting Manual, Cell 58, Lighting Control Module and Cell 11, Circuit Protection/Fuse Panel to identify the subsystem in need of repair. REPAIR as required. GO to **B4.**

Official Licensed Reproduction
Ford Motor Company

(Continued)

DIAGNOSIS AND TESTING (Continued)

PINPOINT TEST B: NO COMMUNICATION WITH THE STEERING COLUMN/IGNITION/LIGHTING (SCIL) CONTROL MODULE (Continued)

TEST CONDITIONS	TEST DETAILS/RESULTS/ACTIONS
B4 CHECK SUPPLY ON STEERING COLUMN/IGNITION/LIGHTING CONTROL CONNECTOR C289 FOR B+	
1 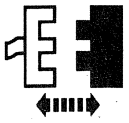 SCIL Connector C289 2 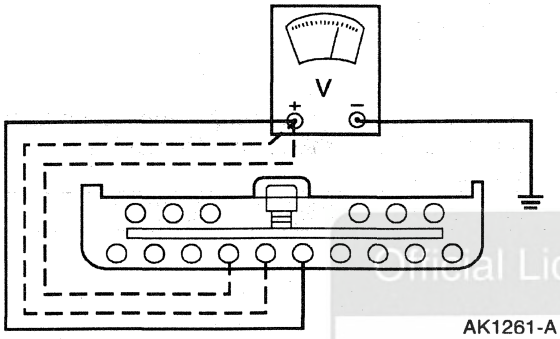 AK1261-A	2 Measure the voltage at each of the following steering column/ignition/lighting control module Connector C289 pins. Note the voltage reading at each Pin. — C289-5, Circuit 1058 (BR/W) — C289-6, Circuit 1057 (O/BK) — C289-7, Circuit 908 (PK/LG) • Is the voltage reading on any circuit B+? → **Yes** GO to Communication Network Diagnostics in Section 418-00 to diagnose the network concern. → **No** For each suspect circuit, REFER to the Electrical and Vacuum Troubleshooting Manual, Cell 58, Lighting Control Module and Cell 11, Circuit Protection/Fuse Panel to identify the subsystem in need of repair. REPAIR as required. REPEAT the data link diagnostic test.

Ford Motor Company Official Licensed Product

DIAGNOSIS AND TESTING (Continued)

PINPOINT TEST C: THE LUGGAGE COMPARTMENT DOOR DOES NOT LOCK

TEST CONDITIONS	TEST DETAILS/RESULTS/ACTIONS
C1 CHECK THE LOCK OPERATION	
1 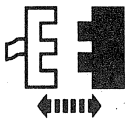 Luggage Compartment Door Lock Solenoid C426	2 Close the luggage compartment door. • Does the luggage compartment door lock? → **Yes** GO to **C2**. → **No** REPAIR the luggage compartment door latch and lock. TEST the system for normal operation.
C2 CHECK THE STEERING COLUMN/IGNITION/LIGHTING CONTROL MODULE OUTPUT	
1 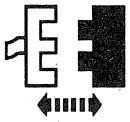 Luggage Compartment Door Release Relay C1031 2 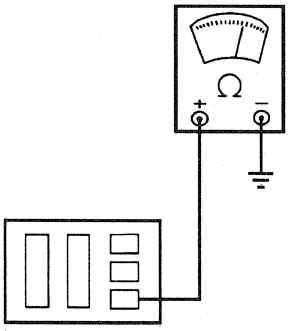 AR0653-C	2 Measure the resistance between the luggage compartment door release relay connector Pin C1031-1, Circuit 202 (O/LG) and ground. • Is the resistance less than 10,000 ohms? → **Yes** GO to **C3**. → **No** GO to **C4**.

Official Licensed Product
Ford Motor Company

(Continued)

DIAGNOSIS AND TESTING (Continued)

PINPOINT TEST C: THE LUGGAGE COMPARTMENT DOOR DOES NOT LOCK (Continued)

TEST CONDITIONS	TEST DETAILS/RESULTS/ACTIONS
C3 CHECK FOR A SHORT CIRCUIT	
1 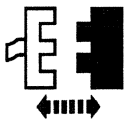 SCIL Connector C288 2 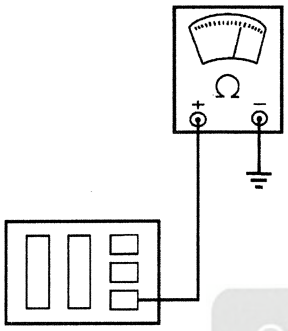 AR0653-C	2 Measure the resistance between the luggage compartment door release relay connector Pin C1031-1, Circuit 202 (O/LG) and ground. • Is the resistance less than 10,000 ohms? → **Yes** REPAIR the short to ground on Circuit 202 (O/LG). TEST the system for normal operation. → **No** REPLACE the steering column/ignition/lighting control module. TEST the system for normal operation.
C4 CHECK CIRCUIT 486 (BR/W) FOR A SHORT TO B+	
1 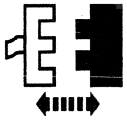 Luggage Compartment Door Lock Solenoid C426 2 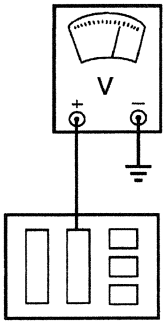 AR0654-A	2 Measure the voltage at the luggage compartment door release relay connector Pin C1031-5, Circuit 486 (BR/W). • Is battery voltage present? → **Yes** REPAIR the short to battery on Circuit 486 (BR/W). TEST the system for normal operation. → **No** REPLACE the luggage compartment door solenoid. TEST the system for normal operation.

Official Licensed P
Ford Motor Company

DIAGNOSIS AND TESTING (Continued)

PINPOINT TEST D: THE LUGGAGE COMPARTMENT DOOR DOES NOT UNLOCK

TEST CONDITIONS	TEST DETAILS/RESULTS/ACTIONS
D1 CHECK THE LOCK/LATCH OPERATION	
	1 Unlock and open the luggage compartment door using the key in the door lock cylinder. • Does the manual lock/latch release the luggage compartment door? → **Yes** GO to **D2**. → **No** REPAIR the lock and latch. TEST the system for normal operation.
D2 CHECK THE RELAY OUTPUT	
NOTE: The RELEASE command activates the luggage compartment door release output for 0.25 second only.	
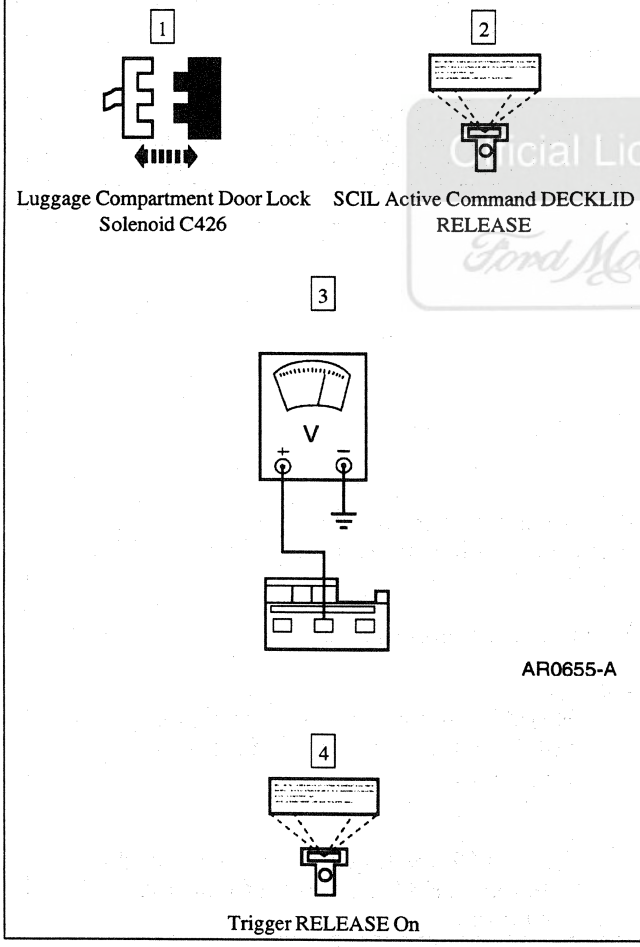 1 Luggage Compartment Door Lock Solenoid C426 2 SCIL Active Command DECKLID RELEASE 4 Trigger RELEASE On	3 Measure the voltage at the luggage compartment door to release solenoid Connector C426, Circuit 486 (BR/W)

Official Licensed Product Ford Motor Company

(Continued)

DIAGNOSIS AND TESTING (Continued)

PINPOINT TEST D: THE LUGGAGE COMPARTMENT DOOR DOES NOT UNLOCK (Continued)

TEST CONDITIONS	TEST DETAILS/RESULTS/ACTIONS
D2 CHECK THE RELAY OUTPUT (Continued)	
	• Is the voltage reading B+when the RELEASE command is sent? → **Yes** GO to **D8**. → **No** GO to **D3**.
D3 CHECK THE RELEASE RELAY SUPPLY	
1 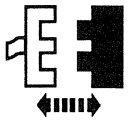 Luggage Compartment Door Lock Release Lock C1031 2 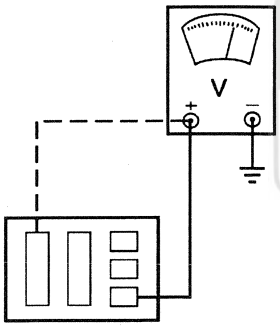 AR0675-B	2 Measure the voltage at the luggage compartment door release relay connector Pin C1031-1, then Pin C1031-3, Circuit 84 (P/Y). • Is the voltage reading B+? → **Yes** GO to **D4**. → **No** REPAIR Circuit 84 (P/W) and fuse junction panel Fuse 8 (30A). TEST the system for normal operation.

Official Licensed Product
Ford Motor Company

(Continued)

DIAGNOSIS AND TESTING (Continued)

PINPOINT TEST D: THE LUGGAGE COMPARTMENT DOOR DOES NOT UNLOCK (Continued)

TEST CONDITIONS	TEST DETAILS/RESULTS/ACTIONS
D4 CHECK THE RELAY COMMAND	
1 SSCIL Active Command DECKLID RELEASE	
2 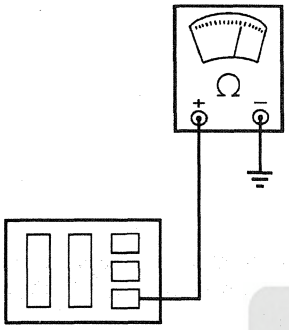 AR0653-C	2 Measure the resistance between the luggage compartment door release relay connector Pin C1031-1, Circuit 202 (O/LG) and ground. • Is the resistance less than 5 ohms? → **Yes** GO to **D5**. → **No** GO to **D7**.
3 Trigger RELEASE On	

Official Licensed Product
Ford Motor Company

(Continued)

DIAGNOSIS AND TESTING (Continued)

PINPOINT TEST D: THE LUGGAGE COMPARTMENT DOOR DOES NOT UNLOCK (Continued)

TEST CONDITIONS	TEST DETAILS/RESULTS/ACTIONS
D5 CHECK THE RELAY OUTPUT FOR A SHORT TO GROUND	
1 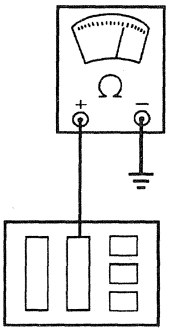 AR0657-A	1 Measure the resistance between the luggage compartment door release relay connector Pin C1031-5, Circuit 486 (BR/W) and ground. • Is the resistance less than 10,000 ohms? → **Yes** REPAIR Circuit 486 (BR/W) for a short to ground. TEST the system for normal operation. → **No** GO to **D6**.
D6 CHECK THE RELAY OUTPUT FOR AN OPEN	
1 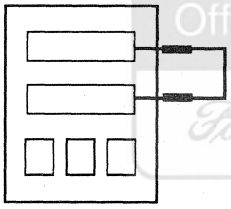 AR0658-A	1 Install a jumper wire between the luggage compartment door release relay connector Pin C1031-3, Circuit 84 (P/Y) and Pin C1031-5, Circuit 486 (BR/W)
2 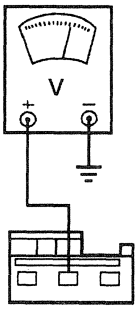 AR0655-A	2 Measure the voltage at the luggage compartment door release solenoid Connector C426, Circuit 486 (BR/W). • Is the voltage reading B+? → **Yes** REPLACE the luggage compartment door release relay. TEST the system for normal operation. → **No** REPAIR the open in Circuit 486 (BR/W). TEST the system for normal operation.

Official Licensed Product
Ford Motor Company

(Continued)

DIAGNOSIS AND TESTING (Continued)

PINPOINT TEST D: THE LUGGAGE COMPARTMENT DOOR DOES NOT UNLOCK (Continued)

TEST CONDITIONS	TEST DETAILS/RESULTS/ACTIONS
D7 CHECK CIRCUIT 202 (O/LG)	
1 SCIL Connector C288	
2 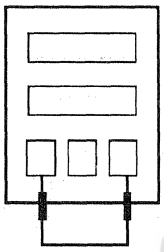 AR0659-A	2 Install a jumper between the luggage compartment door release relay connector Pin C1031-2, Circuit 84 (P/Y) and Pin C1031-1, Circuit 202 (O/LG).
3 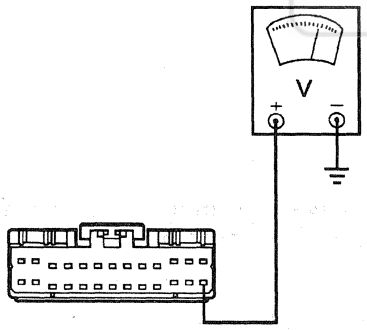 AR0660-A	3 Measure the voltage at the steering column/ignition/lighting control module Pin C288-26, Circuit 202 (O/LG). • Is the voltage reading B+? → **Yes** REPLACE the steering column/ignition/lighting control module. TEST the system for normal operation. → **No** REPAIR the open in Circuit 202 (O/LG). TEST the system for normal operation.

Official Licensed Product
Ford Motor Company

(Continued)

DIAGNOSIS AND TESTING (Continued)

PINPOINT TEST D: THE LUGGAGE COMPARTMENT DOOR DOES NOT UNLOCK (Continued)

TEST CONDITIONS	TEST DETAILS/RESULTS/ACTIONS
D8 CHECK THE SOLENOID GROUND	
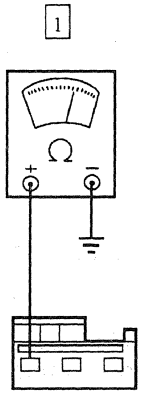 AR0661-A	1 Measure the resistance between the luggage compartment door release solenoid connector Pin C426, Circuit 57 (BK) and ground. • Is the resistance less than 5 ohms? → **Yes** REPLACE the luggage compartment door release solenoid. TEST the system for normal operation. → **No** REPAIR the open in Circuit 57 (BK). TEST the system for normal operation.

PINPOINT TEST E: THE LUGGAGE COMPARTMENT DOOR OPENS WITH THE VEHICLE IN MOTION

TEST CONDITIONS	TEST DETAILS/RESULTS/ACTIONS
E1 CHECK THE OPERATION	
	1 Check that the luggage compartment door is closed and locked. 2 Drive the vehicle at speed over 8 Km/h (5 mph). 3 Press the luggage compartment door release switch. • Does the luggage compartment door open? → **Yes** GO to **E2**. → **No** EXPLAIN the operation to the customer.

Official Licensed Product Ford Motor Company

(Continued)

DIAGNOSIS AND TESTING (Continued)

PINPOINT TEST E: THE LUGGAGE COMPARTMENT DOOR OPENS WITH THE VEHICLE IN MOTION (Continued)

TEST CONDITIONS	TEST DETAILS/RESULTS/ACTIONS
E2 CHECK THE SPEED SIGNAL	
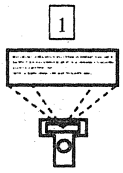 SCIL Continuous DTCs	• Is DTC U1041 retrieved? → **Yes** GO to Section 206-09, Inspection and Verification to continue diagnostics. → **No** REPLACE the steering column/ignition/lighting control module. TEST the system for normal operation.

PINPOINT TEST F: THE FUEL FILLER DOOR RELEASE IS INOPERATIVE

TEST CONDITIONS	TEST DETAILS/RESULTS/ACTIONS
F1 CHECK THE OPERATION	1 Check that the fuel filler door is closed and latched. 2 Locate the manual release cable in the luggage compartment. 3 Pull the manual release cable to release the fuel filler door. • Does the fuel filler door operate manually? → **Yes** GO to **F2**. → **No** REPAIR the fuel filler door and release mechanism. TEST the system ror normal operation.

Official Licensed Product Ford Motor Company

(Continued)

DIAGNOSIS AND TESTING (Continued)

PINPOINT TEST F: THE FUEL FILLER DOOR RELEASE IS INOPERATIVE (Continued)

TEST CONDITIONS	TEST DETAILS/RESULTS/ACTIONS
F2 CHECK FOR A SHORT TO BATTERY	
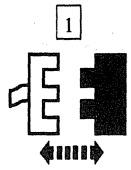 Fuel Filler Door Release Solenoid C412 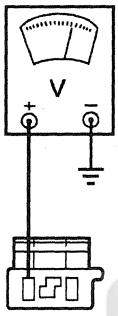 AR0662-A	2 Measure the voltage at the fuel filler door release solenoid connector C412, Circuit 482 (W/PK). • Is the voltage reading B+? → **Yes** GO to **F3**. → **No** GO to **F4**.
F3 CHECK FOR A SHORTED SWITCH	
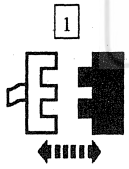 Fuel Filler Door Release Switch C513 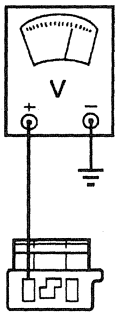 AR0662-A	2 Measure the voltage at the fuel filler door release solenoid Connector C412, Circuit 482 (W/PK). • Is the voltage reading B+? → **Yes** REPAIR the short to the battery on Circuit 482 (W/PK). TEST the system for normal operation. → **No** REPLACE the fuel filler door release switch. TEST the system for normal operation.

Official Licensed Product
Ford Motor Company

(Continued)

DIAGNOSIS AND TESTING (Continued)

PINPOINT TEST F: THE FUEL FILLER DOOR RELEASE IS INOPERATIVE (Continued)

TEST CONDITIONS	TEST DETAILS/RESULTS/ACTIONS
F4 CHECK FOR A SHORT TO GROUND	
1 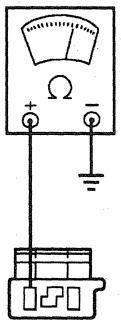 AR0663-A	1 Measure the resistance between the fuel filler door release solenoid Connector C412, Circuit 482 (W/PK) and ground. • Is the resistance less than 10,000 ohms? → **Yes** REPAIR Circuit 482 (W/PK) for a short to ground. TEST the system for normal operation. → **No** GO to **F5**.
F5 CHECK THE SWITCH SUPPLY	
1 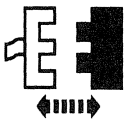 Fuel Filler Door Release Switch C513 2 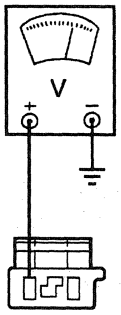 AR0662-A	2 Measure the voltage at the fuel filler door release switch connector C513, Circuit 84 (P/Y). • Is the voltage reading B+? → **Yes** GO to **F6**. → **No** REPAIR the open in Circuit 84 (P/Y). TEST the system for normal operation.
F6 CHECK THE SWITCH OPERATION	
	1 Measure the resistance between the fuel filler door release switch terminals.

(Continued)

Official Licensed Product
Ford Motor Company

DIAGNOSIS AND TESTING (Continued)

PINPOINT TEST F: THE FUEL FILLER DOOR RELEASE IS INOPERATIVE (Continued)

TEST CONDITIONS	TEST DETAILS/RESULTS/ACTIONS
F6 CHECK THE SWITCH OPERATION (Continued)	
	2 Press the fuel filler door release switch and observe the readings. • Is the resistance less than 5 ohms with the switch pressed and more than 10,000 ohms with the switch released? → **Yes** GO to **F7**. → **No** REPLACE the fuel filler door release switch. TEST the system for normal operation.
F7 CHECK THE SOLENOID GROUND	
1 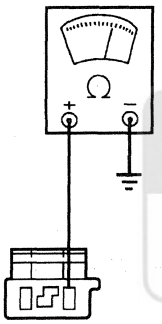 AR0666-A	1 Measure the resistance between the fuel filler door release solenoid Connector C412, Circuit 57 (BK) and ground. • Is the resistance less than 5 ohms? → **Yes** REPLACE the fuel filler door release solenoid. TEST the system for normal operation. → **No** REPAIR the open in Circuit 57 (BK). TEST the system for normal operation.

Official Licensed Product Ford Motor Company

REMOVAL AND INSTALLATION

Latch — Door

Removal

1. Remove the front door trim panel (23943) and watershield; refer to Section 501-05.

REMOVAL AND INSTALLATION (Continued)

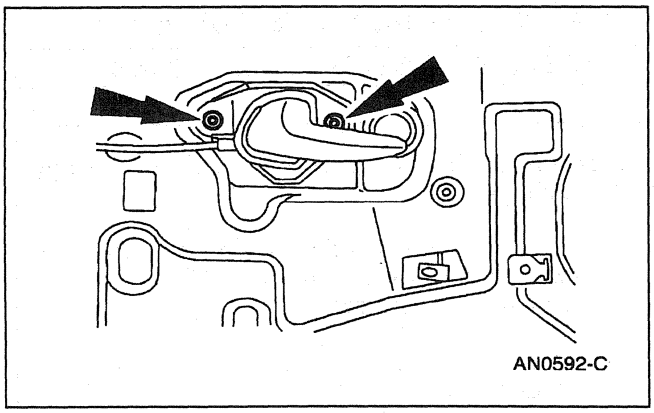

2. Remove the front door latch remote control and link assembly.

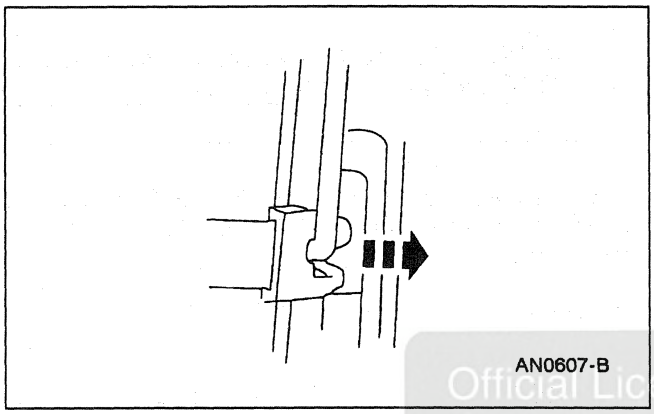

3. Remove the lock rod to lock cylinder clip.

Official Licensed Product
Ford Motor Company

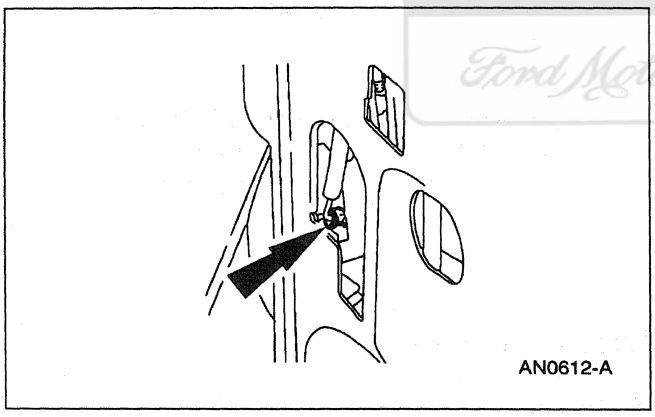

4. Disconnect the power door lock actuator (218A42) from the front door latch (21812).

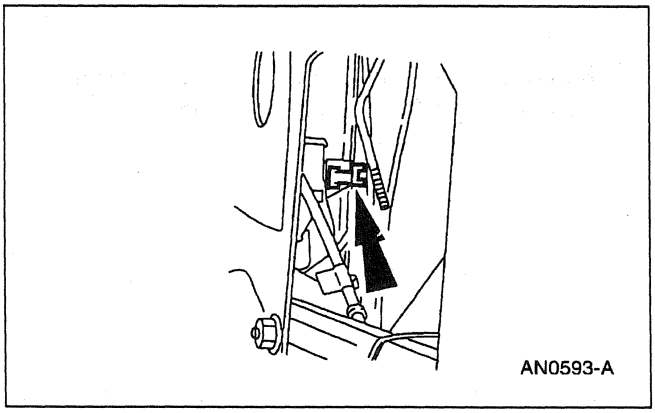

5. Disconnect the outside door handle rod from the front door latch retaining clip.

REMOVAL AND INSTALLATION (Continued)

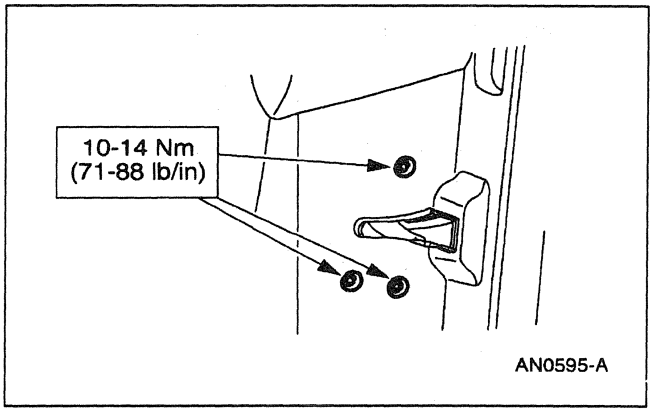

6. Remove the screws.

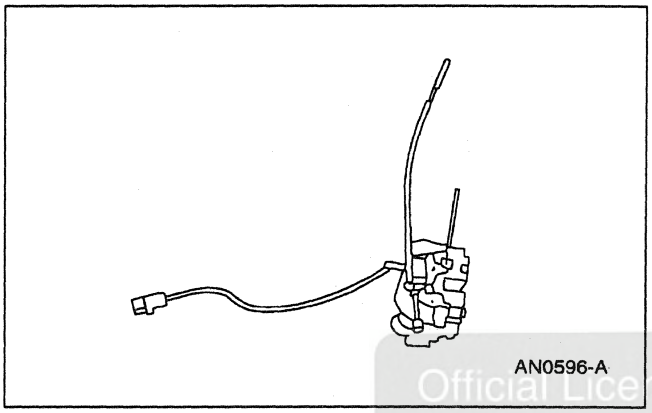

7. Remove the front door latch , remote control link and push button rod lock cylinder rod as an assembly.

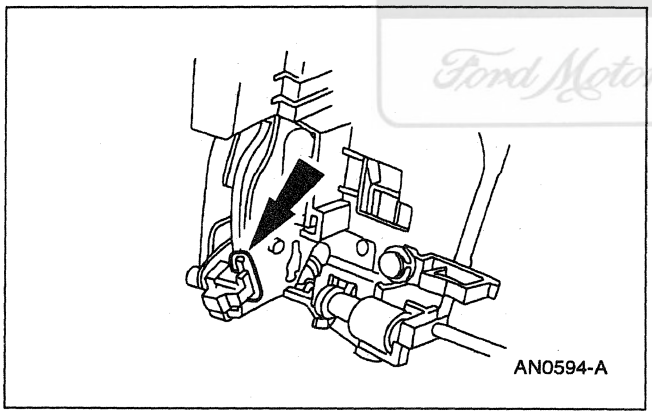

8. Remove the push button rod from the front door latch .

Official Licensed Product
Ford Motor Company

Installation

1. Follow the removal procedure in reverse order.

Latch — Luggage Compartment Door

Removal

1. Open the luggage compartment door (40110).

REMOVAL AND INSTALLATION (Continued)

2. Remove the luggage compartment door trim panel (45594).

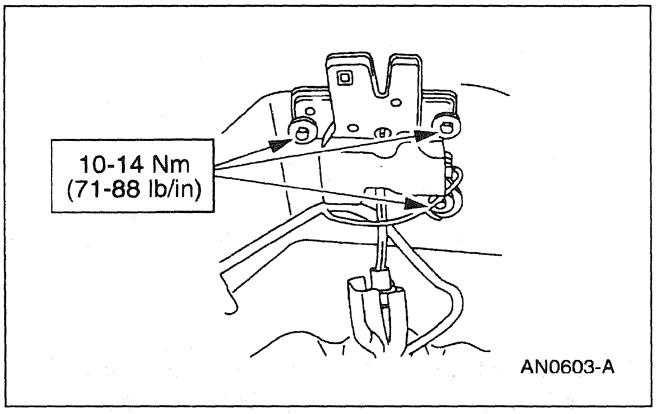

3. Remove the screws.

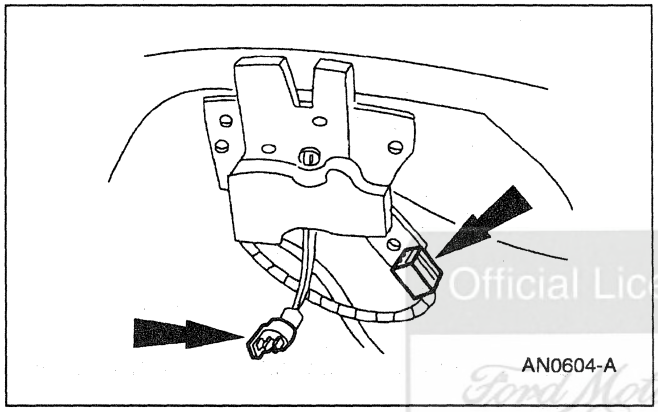

4. Disconnect the connectors.

Official Licensed Product
Ford Motor Company

5. Remove the luggage compartment door latch (43200).

Installation

1. Follow the removal procedure in reverse order.

Handle — Outside Door

Removal

1. Remove the front door trim panel (23943) and watershield.

REMOVAL AND INSTALLATION (Continued)

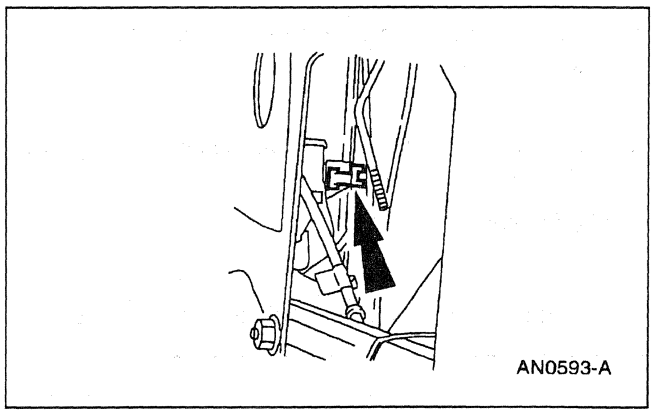

2. Disconnect the outside door handle-to-latch rod at latch.

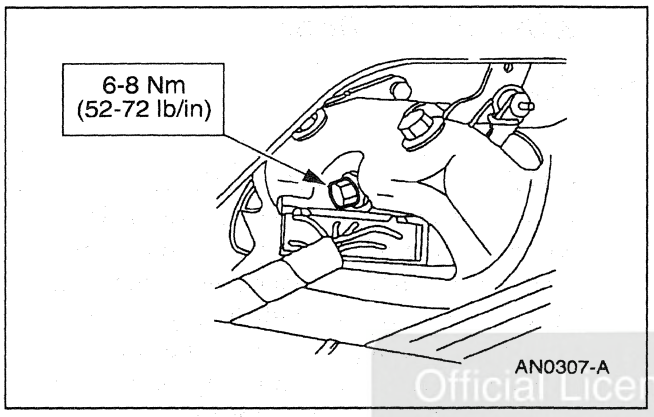

3. Remove the keyless entry keypad (14A626) from the outside door handle (22404).

Official Licensed Product

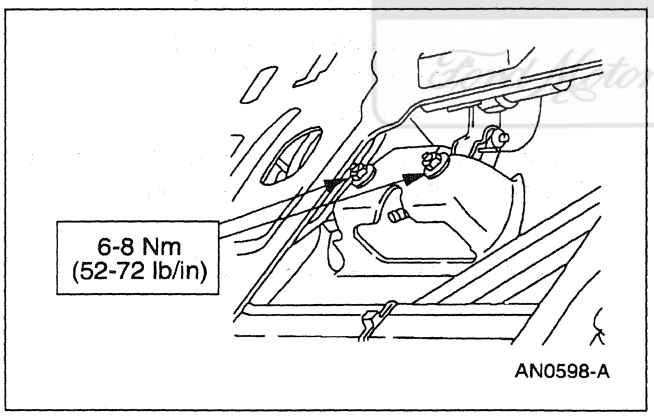

4. Remove the nut and washer assemblies from the outside door handle .

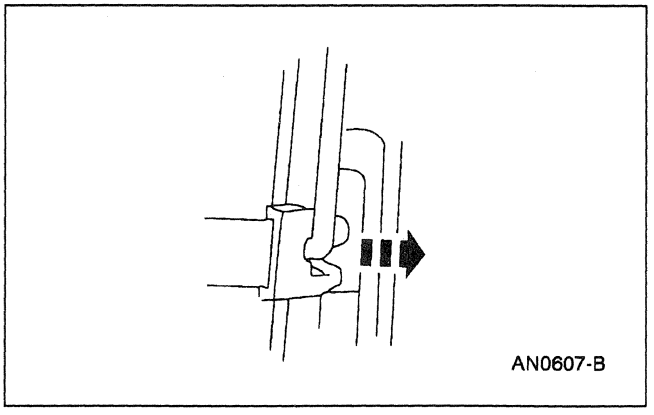

5. Disconnect the lock rod clip from lock cylinder pawl and slide off the end of the rod.

REMOVAL AND INSTALLATION (Continued)

6. Disconnect the anti-theft switch connector and wiring retainers.

7. Remove the outside door handle and lock cylinder (22050).

Installation

1. Follow the removal procedure in reverse order.

Lock Cylinder — Door

Removal

1. **NOTE:** Rebuilding a lock is easier and faster than replacing multiple locksets to keep a single keycode for the vehicle. Any lock component can be serviced individually using the Lock Service Package in conjunction with the Lock Tumbler Kit. Each lock component kit can be ordered separately. Detailed repair instruction books are included within the lock tumbler kits.

   Remove the front door trim panel (23943) and watershield; refer to Section 501-05.

Official Licensed Product
Ford Motor Company®

2. Remove the outside door handle (22404); refer to Handle—Outside Door in this section.

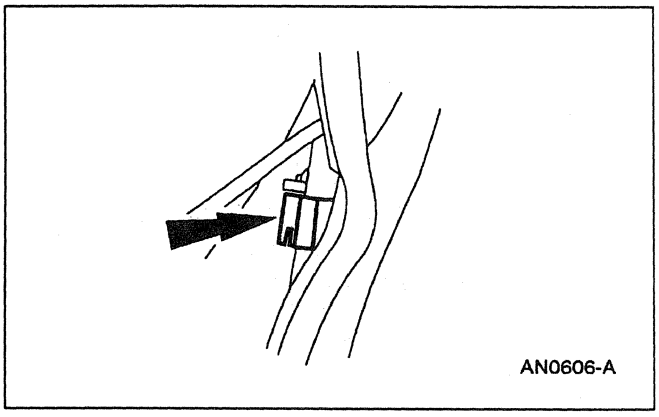

3. Disconnect the anti-theft switch connector.

REMOVAL AND INSTALLATION (Continued)

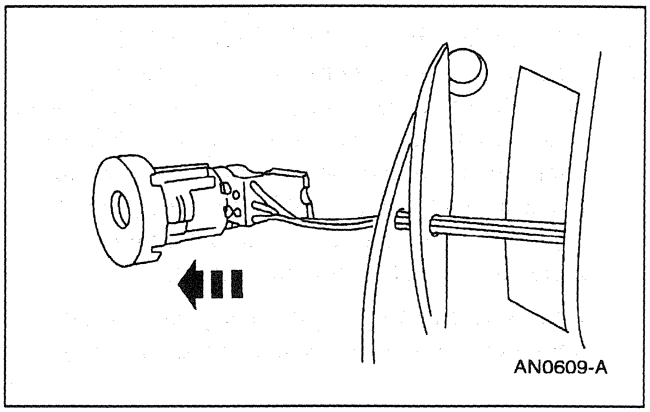

4. Remove the lock cylinder (22050) from the outside door handle by inserting the key and turning towards the UNLOCK position.

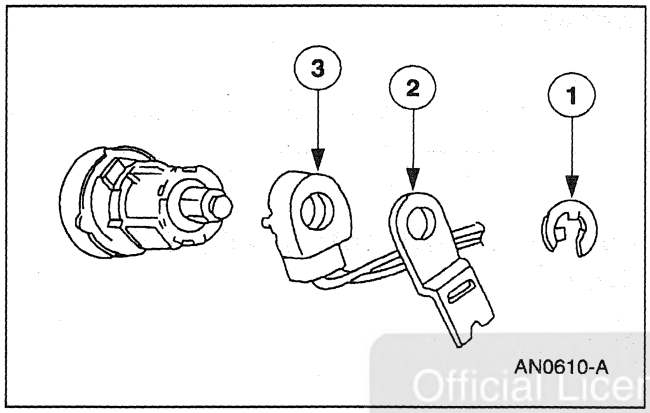

5. Remove the anti-theft switch from the lock cylinder. Remember the clip direction.
   1 Remove the retaining clip. Remember the clip direction.
   2 Remove the lock cylinder lever.
   3 Remove the anti-theft switch.

Official Licensed Product
Ford Motor Company

Installation

1. Follow the removal procedure in reverse order.
2. Make sure all wires are clear of moving parts.

Lock Cylinder — Luggage Compartment Door

Removal

1. Remove the rear lamp (13404).

REMOVAL AND INSTALLATION (Continued)

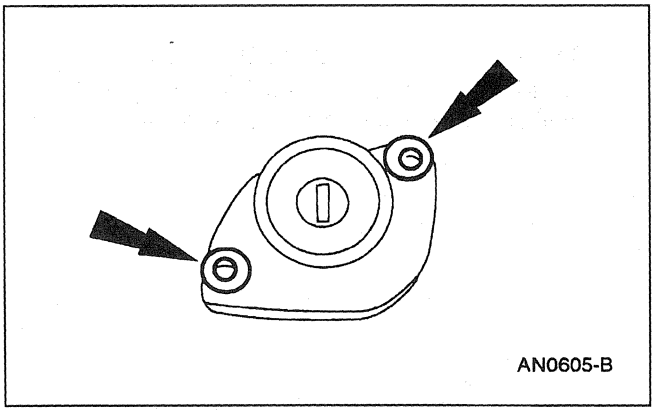

2. **NOTE:** Rebuilding a lock is easier and faster than replacing multiple locksets to keep a single keycode for the vehicle. Any lock component can be serviced individually using the Lock Service Package in conjunction with the Lock Tumbler Kit. Each lock component kit can be ordered separately. Detailed repair instruction books are included within the lock tumbler kits.

   Remove the rivets and the luggage compartment door lock cylinder. Twist the cylinder and remove.

Installation

1. Follow the removal procedure in reverse order.

Latch Remote Control — Fuel Filler Door

Removal

Official Licensed Product
Ford Motor Company

1. Open the fuel tank filler door (405A26).

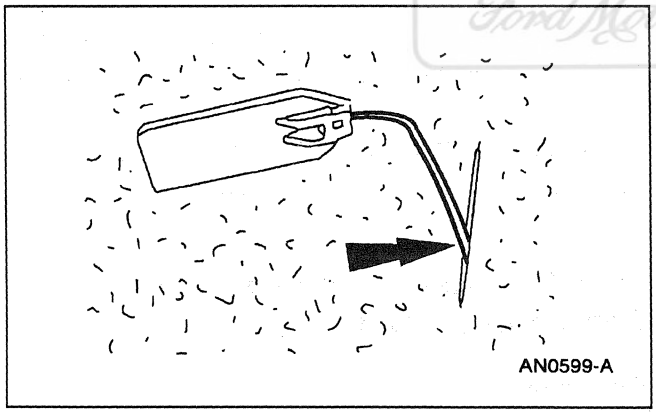

2. Feed the manual release cable through the opening in the luggage compartment trim panel.

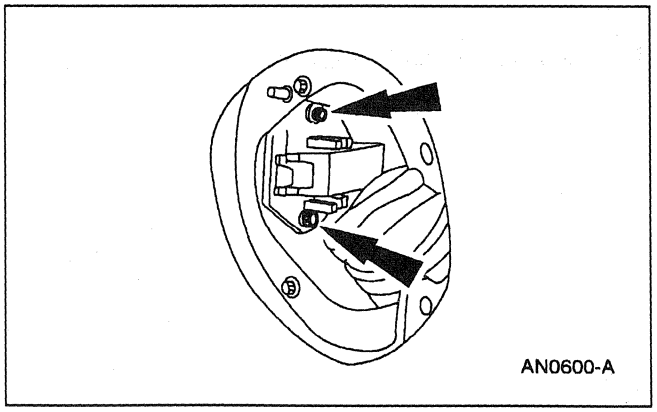

3. Remove the screws.

REMOVAL AND INSTALLATION (Continued)

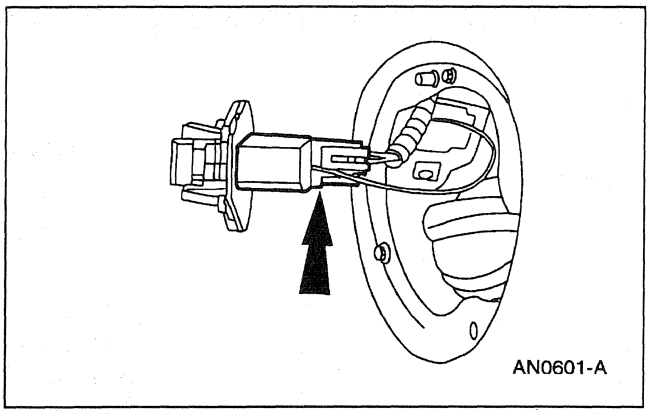

4. Disconnect the connector.

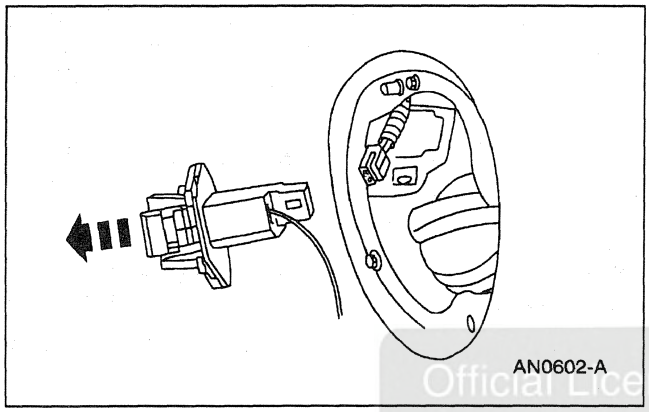

5. Remove the fuel filler door latch (28610).

Official Licensed Product
Ford Motor Company

Installation

1. Follow the removal procedure in reverse order.

SPECIFICATIONS

General Specifications

Item	Specification
Lock Tumbler Kit	F6TZ-15221A4-AA
Ignition Cylinder Assembly	F6TZ-11582-AA
Door Lever Kit	F6TZ-1521970-B
Glove Compartment Service Kit	F6OZ-5406082-B
Door Lock Service Kit	F6OZ-5421990-AA
Bracket	F6LZ-6343268-AA

Torque Specifications

Description	Nm	Lb/Ft	Lb/In
Luggage Compartment Latch Striker Bolts	10-14	—	89-123
Luggage Compartment Latch Retaining Screws	10-14	—	89-123

(Continued)

Torque Specifications

Description	Nm	Lb/Ft	Lb/In
Door Striker Retaining Bolts	21-29	16-21	—
Outside Door Handle Retaining Nuts	6-8	—	54-70
Door Latch Retaining Screws	10-14	—	89-123

SECTION 501-14B Keyless Entry/Computer Operated Locks

VEHICLE APPLICATION: Mark VIII

SUBJECT **PAGE**

DESCRIPTION AND OPERATION
Electronic Door Lock Control System 501-14B-2
DIAGNOSIS AND TESTING
Electronic Door Lock Control System 501-14B-3
Inspection and Verification 501-14B-4
DDM Active Command Index 501-14B-6
DDM Diagnostic Trouble Code (DTC) Index 501-14B-4
DDM Parameter Identification (PID) Index 501-14B-5
Pinpoint Tests 501-14B-11
Symptom Chart 501-14B-10
REMOVAL AND INSTALLATION
Keypad 501-14B-39
Module — Driver Door 501-14B-39
GENERAL PROCEDURES
Programming — Keyless Entry Keypad 501-14B-40
Programming — Keyless Entry Remote Transmitter 501-14B-41
SPECIFICATIONS 501-14B-42

Official Licensed Product
Ford Motor Company

DESCRIPTION AND OPERATION

Electronic Door Lock Control System

Electronic Door Lock System

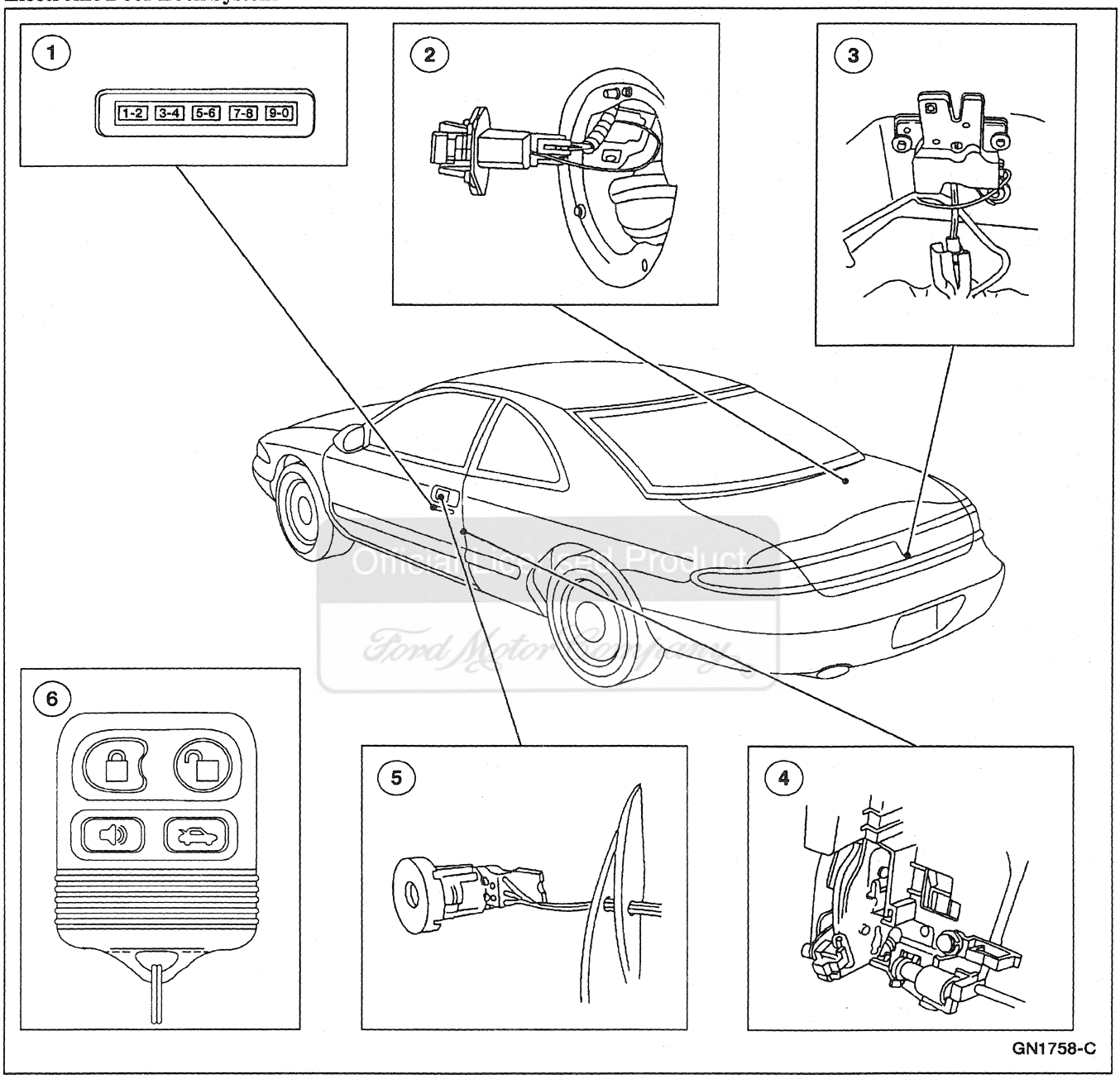

Item	Part Number	Description
1	14A626	Keypad
2	405A26	Fuel Filler Door
3	43200	Luggage Compartment Door Latch

Item	Part Number	Description
4	21812	Front Door Latch
5	—	Door Lock Cylinder
6	15K601	Keyless Entry Remote Transmitter

(Continued)

DESCRIPTION AND OPERATION (Continued)

The power door lock system is controlled by the driver door module (DDM). The DDM will lock or unlock the driver door or passenger door or open the luggage compartment or the fuel filler door depending on the input it receives. The inputs to the system are supplied through the keyless entry remote transmitter (15K601), the keyless entry keypad (14A626), the door lock switch, the fuel filler door switch, the luggage compartment door release switch or the door key.

Unlock driver door mode is triggered by pressing the unlock button on the keyless entry remote transmitter, pressing the programmed code on the keyless entry keypad or turning the door key once. This mode unlocks the driver door only. To unlock the passenger door, press the unlock button on the keyless entry remote transmitter a second time within five seconds of unlocking the driver door, press the 3/4 button on the keyless entry keypad, turn the door key a second time, or press the unlock button on the power door lock switch.

Lock all doors mode is triggered by pressing the lock button on the keyless entry remote transmitter, pressing both the 7/8 and the 9/0 buttons on the keyless entry keypad simultaneously, pressing the lock button on the power door lock switch or triggering the autolock function.

The autolock function occurs when all the following parameters are met:

- The autolock feature is activated (turned on in the driver setting menu in the message center).
- All doors are fully closed.
- The ignition switch is in the RUN position.
- The transmission range selector is in any forward range.
- The vehicle speed exceeds 5 km/H (3 mph).

Unlock luggage compartment mode is activated by pressing the luggage compartment door release switch, pressing the 5/6 button on the keyless entry keypad within 5 seconds of entering a valid code or pressing the luggage compartment door release switch on the keyless entry remote transmitter twice within five seconds.

Unlock fuel filler door mode is triggered by pressing the fuel filler door switch on the driver door trim panel.

The remote entry panic alarm is activated when the ignition is in the OFF position and the panic button on the keyless entry remote transmitter is depressed.

The smart lock feature prevents the driver from locking the keys in the vehicle. With the key in the ignition, in any position, and the driver door open, the doors cannot be locked using the driver or passenger door lock switch. The vehicle can still be locked using the manual button or keyless entry remote transmitter.

Ford Motor Company

DIAGNOSIS AND TESTING

Electronic Door Lock Control System

Refer to Electrical and Vacuum Troubleshooting Manual, Cell 110, Power Door Locks for schematic and connector information.

Refer to Electrical and Vacuum Troubleshooting Manual, Cell 111, Remote/Keyless Entry for schematic and connector information.

Refer to Electrical and Vacuum Troubleshooting Manual, Cell 113, Trunk Lid Release for schematic and connector information.

Refer to Electrical and Vacuum Troubleshooting Manual, Cell 116, Fuel Filler Door Release for schematic and connector information.

DIAGNOSIS AND TESTING (Continued)

Refer to Electrical and Vacuum Troubleshooting Manual, Cell 57, Driver's Door Module for schematic and connector information.

Special Tool(s)

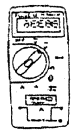 ST1137-A	73 Digital Multimeter or equivalent 105-R0051
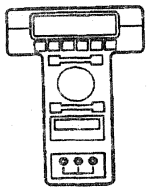 ST1217-A	New Generation Star (NGS) Tester or equivalent 418-F048 (007-00500)

Inspection and Verification

1. Verify the customer concern by operating the electronic door lock control system to duplicate the concern.
2. Visually inspect for obvious signs of mechanical or electrical damage.

Visual Inspection Chart

Mechanical	Electrical
• Binding latch or lock mechanisms • Keypad membrane • Remote transmitter(s)	• Fuse junction panel fuse 5 (10A), 41 (10A) • Power distribution box fuse 5 (30A) • Loose connectors • Corroded connectors • Exposed or cut wires

3. If the concern remains after the inspection, connect the New Generation STAR (NGS) Tester to the data link connector (DLC) located beneath the instrument panel and select the vehicle to be tested from the NGS menu. If the NGS does not communicate with the vehicle:
   - check that the program card is properly installed.
   - check the connections to the vehicle.
   - check the ignition switch position.
4. If the NGS still does not communicate with the vehicle, refer to the New Generation STAR Tester manual.
5. Perform the DATA LINK DIAGNOSTIC TEST. If the NGS responds with:
   - CKT914, CKT915 or CKT70 = ALL ECUS NO RESP/NOT EQUIP, refer to Section 418-00.
   - NO RESP/NOT EQUIP for DDM, go to Pinpoint Test A.
   - NO RESP/NOT EQUIP for SCIL, go to Pinpoint Test B.
   - SYSTEM PASSED, retrieve and record the continuous diagnostic trouble codes (DTCs), erase the continuous DTCs and perform self-test diagnostics for the SCIL module and the DDM.
6. If the DTCs retrieved are related to the concern, go to the DDM or the SCIL Module Diagnostic Trouble Code (DTC) Index to continue diagnostics.
7. If no DTCs related to the concern are retrieved, proceed to the Symptom Chart to continue diagnostics.

Official Licensed Product
Ford Motor Company

DDM Diagnostic Trouble Code (DTC) Index

DDM Diagnostic Trouble Code (DTC) Index

DTC	Description	DTC Caused By	Action
B1322	Door Ajar LF Circuit Short to Ground	DDM	REFER to Section 417-02.
B1342	ECU is Defective	DDM	CLEAR the DTCs. RETRIEVE the DTCs. If DTC B1342 is retrieved, REPLACE the DDM; REFER to Section 419-10. TEST the system for normal operation.

(Continued)

DIAGNOSIS AND TESTING (Continued)

DDM Diagnostic Trouble Code (DTC) Index

DTC	Description	DTC Caused By	Action
B1396	Power Door Lock Circuit Short to Battery	DDM	REFER to Section 501-14B.
B1525	Keyless Entry Circuit Short to Battery	DDM	REFER to Section 501-14B.
B1529	Memory Set Switch Circuit Short to Battery	DDM	REFER to Section 501-09.
B1539	Mirror Driver Switch Assembly Circuit Failure	DDM	REFER to Section 501-09.
B1549	Power Window Master Circuit Short to Battery	DDM	REFER to Section 501-11.
B1554	Luggage Compartment Door Release Circuit Short to Ground	DDM	REFER to Section 501-14A.
B1676	Battery Voltage Out of Range	DDM	REFER to Section 414-00.
U1041	SCP Invalid or Missing Data for Vehicle Speed	ABS	PERFORM ABS On-Demand Self-Test.
U1059	SCP Invalid or Missing Data for Transmission/Transaxle/ PRNDL	PCM	REFER to Powertrain Control/Emissions Diagnosis Manual [1].
U1117	SCP Invalid or Missing Data for Electrical Energy Management	SCIL	PERFORM SCIL On-Demand Self-Test.
U1135	SCP Invalid or Missing Data for Ignition Switch/Starter	SCIL	PERFORM SCIL On-Demand Self-Test.
U1196	SCP Invalid or Missing Data for Door Locks	SCIL	PERFORM SCIL On-Demand Self-Test.
U1199	SCP Invalid or Missing Data for External Access (Doors)	SCIL	PERFORM SCIL On-Demand Self-Test.

Official Licensed Product

DDM Parameter Identification (PID) Index

DDM Parameter Identification (PID) Index

PID	Description	Expected Values
CCNT__DD	Number of Continuous DTCs on DDM	one count per bit
KEYCODE	Keyless Entry Factory Code	5 digit no. encoded, INVLD
D__DR__DD	Driver Door Ajar Switch	AJAR, CLOSED
DLIDRLS	Deck Lid Release Switch	ON, OFF
D__PW__SW	Driver Power Window Switch	UP, DOWN, OFF, SHORT
OTD__SW	One Touch Down Switch	OFF, DOWN
DR__LOCK	Door Lock Output State	SHORT, LOCK, UNLOCK, OFF
D__WINDO	Driver Front Window	DOWN, notDWN
MEM__OFF	Memory Set Switch	ACTIVE, notACT
MEM2__SW	Memory Recall Switch #2	OFF, ON
MEM1__SW	Memory Recall Switch #1	OFF, ON
MIR__SEL	Power Mirror Select Switch	PSSNGR, DRIVER

(Continued)

1 Can be purchased as a separate item.

DIAGNOSIS AND TESTING (Continued)

DDM Parameter Identification (PID) Index

PID	Description	Expected Values
MIRV__SW	Power Mirror Position Switch-Vertical	SHORT, DOWN, UP, OFF
MIRH__SW	Power Mirror Position Switch - Horizontal	SHORT, RIGHT, LEFT, OFF
KEY__PAD	Keyless Entry Switch	1, 3, 5, 7, 9

DDM Active Command Index

DDM Active Command Index

Active Command	Display	Action
PID LATCH	PID LATCH	ON, OFF
MEMORY SEAT LED CONTROL	LED STATE	ON, OFF
KEYPAD BACKLIGHTING	LIGHT	ON, OFF
FRONT WINDOW CONTROL	DD DOWN	ON, OFF
DOOR LOCK CONTROL	LOCK	ON, OFF
	UNLOCK	ON, OFF
	DD UNLOCK	ON, OFF

SCIL Module Diagnostic Trouble Code (DTC) Index

SCIL Module Diagnostic Trouble Code (DTC) Index

DTC	Description	DTC Caused By	Action
C1446	Brake Switch Circuit Failure	SCIL	GO to Section 206-05.
B1246	Panel Dim Potentiometer Switch Circuit Failure	SCIL	GO to Section 417-02.
B1312	Lamp Headlamp Input Circuit Short to Battery	SCIL	GO to Section 417-02.
B1334	Luggage Compartment Door Ajar Circuit Short to Ground	SCIL	GO to Section 417-02.
B1342	ECU Defective	SCIL	CLEAR the DTCs. RETRIEVE the DTCs. If DTC B1342 is retrieved, REPLACE the SCIL module; REFER to Section 419-10. TEST the system for normal operation.
B1353	Ignition Key-In Circuit Open	SCIL	REFER to Section 211-05, Symptom Chart.
B1360	Ignition RUN/ACC Circuit Open	SCIL	REFER to Section 211-05, Symptom Chart.
B1364	Ignition Start Circuit Open	SCIL	REFER to Section 211-05, Symptom Chart.
B1446	Wiper Park Sense Circuit Failure	SCIL	REFER to Section 417-01.
B1485	Brake Pedal Input Short to Battery	SCIL	REFER to Section 417-01.
B1509	Flash-to-Pass Switch Circuit Short to Battery	SCIL	REFER to Section 417-01.
B1522	Hood Switch Circuit Short to Ground	SCIL	REFER to Section 419-01A.
B1562	Door Lock Cylinder Circuit Short to Ground	SCIL	REFER to Section 419-01A.
B1566	Door Ajar Circuit Short to Ground	SCIL	REFER to Section 417-02.
B1600	PATS Ignition Key Transponder Signal Is Not Received	SCIL	REFER to Section 419-01B.

(Continued)

DIAGNOSIS AND TESTING (Continued)

SCIL Module Diagnostic Trouble Code (DTC) Index

DTC	Description	DTC Caused By	Action
B1601	PATS Received Incorrect Key Code From Ignition Key Transponder	SCIL	REFER to Section 419-01B.
B1676	Battery Voltage Out of Range	SCIL	REFER to Section 414-00.
B1682	PATS is Disabled (Check Link Between PATS and Transponder)	SCIL	REFER to Section 419-01B.
B1687	Lamp Dome Input Circuit Short to Battery	SCIL	REFER to Section 417-02.
B1689	Autolamp Delay Circuit Failure	SCIL	REFER to Section 417-01.
B1796	Lamp Headlamp Low Beam Circuit Short to Battery	SCIL	REFER to Section 417-01.
B1875	Turn Signal/Hazard Switch Signal Circuit Failure	SCIL	REFER to Section 417-01.
B1980	Bulb Outage Condition Detected	SCIL	REFER to Section 417-01.
B2328	Steering Column Reach Feedback Potentiometer Circuit Failure	SCIL	REFER to Section 211-05.
B2332	Steering Column Tilt Feedback Potentiometer Circuit Failure	SCIL	REFER to Section 211-05.
B2351	Steering Column Switch Signal Circuit Failure	SCIL	REFER to Section 211-05.
U1027	SCP Invalid or Missing Data for Engine RPM	PCM	REFER to Powertrain Control/Emissions Diagnosis Manual [2].
U1041	SCP Invalid or Missing Data for Vehicle Speed	ABS	PERFORM ABS On-Demand Self-Test.
U1057	SCP Invalid or Missing Data for Vehicle Configuration	SCIL	PERFORM SCIL On-Demand Self-Test.
U1059	SCP Invalid or Missing Data for Transmission/Transaxle/PRNDL	PCM	REFER to Powertrain Control/Emissions Diagnosis Manual [2].
U1123	SCP Invalid or Missing Data for Odometer	ABS	PERFORM ABS On-Demand Self-Test.
U1147	SCP Invalid or Missing Data for Vehicle Security	PCM	DIAGNOSIS the Multiplex Communication Network. REFER to Section 418-00.
U1180	SCP Invalid or Missing Data for Personalization (Memory) Features	DDM	PERFORM DDM On-Demand Self-Test.
U1181	SCP Invalid or Missing Data for Personalization (Memory) Features	DDM	PERFORM DDM On-Demand Self-Test.
U1197	SCP Invalid or Missing Data for Door Locks	DDM	PERFORM DDM On-Demand Self-Test.
U1198	SCP Invalid or Missing Data for External Access (Doors)	DDM	PERFORM DDM On-Demand Self-Test.
U1199	SCP Invalid or Missing Data for External Access (Doors)	DDM	PERFORM DDM On-Demand Self-Test.
U1211	SCP Invalid or Missing Data for Restraints	DSM	PERFORM DSM On-Demand Self-Test.
U1222	SCP Invalid or Missing Data for Interior Lamps	DDM	PERFORM DDM On-Demand Self-Test.

Official Licensed Product
Ford Motor Company

2 Can be purchased as a separate item.

DIAGNOSIS AND TESTING (Continued)

SCIL Module Parameter Identification (PID) Index

SCIL Module Parameter Identification (PID) Index

Display	Description	Expected Values
CCNTSCI	Number of Continuous DTCs on SCIL	one count per bit
BOO__SCI	Brake Switch Input	ON, OFF
PARK__BRK	Parking Brake Switch Input	ON, OFF
TILT	Steering Column Tilt Switch	SHORT, UP, DOWN, OFF
TELESCP	Steering Column Telescope Switch	SHORT, IN, OUT, OFF
TILTPOS	Tilt Position Sensor	SENSED, notSEN
TELEPOS	Telescope Position Sensor	SENSED, notSEN
TURN__SW	Left And Right Turn Signal Switch	OFF, LEFT, RIGHT, SHORT
LBEAMSW	Low Beam Switch	ON, OFF
HBEAMSW	High Beam Switch	ON, OFF
PARK__SW	Parking Switch	ON, OFF
LIGHTSN	Ambient Light	DAY, NIGHT
FLASH	Flash-to-Pass Switch	ON, OFF
FTURN__L	Left and Right Front Turn Lamp	R__OPEN, L__OPEN, L/R__OPEN, OK
RTURN__L	Left and Right Rear Turn Lamp	R__OPEN, L__OPEN, L/R__OPEN, OK
TAILLMP	Left and Right Tail Lamp	OPEN, OK
LOWBEAM	Low Beam Lamp	R__OPEN, L__OPEN, L/R__OPEN, OK
AUTOLMP	Autolamp Switch	ON, OFF
ALP__IMP	Autolamp Analog Input	0-100%
DOMESW	Dome Lamp Switch	ACTIVE, notACT
PANLDIM	Panel Dim Intensity Switch	0-100%
HOOD__SW	Hood Ajar Switch	AJAR, CLOSED
DECKLID	Decklid Ajar Switch	AJAR, CLOSED
P__DR__SW	Passenger Door Ajar Switch	AJAR, CLOSED
IGN__KEY	Ignition Key In/Out	IN, OUT
IGN__SCI	Ignition Switch	START, RUN, OFF, ACCY
WPPRKSW	Windshield Wiper Park Sense	notPRK, PARKED
NUMKEYS	Number of Ignition Key Codes Supported	BCD (valid range 0-16)
DRLKCYL	Door Lock Cylinder	ON, OFF
ENABLE	PATS System Status	ON, OFF
FAILSAF	PATS System Status	ON, OFF

Official Licensed Product
Ford Motor Company

DIAGNOSIS AND TESTING (Continued)

SCIL Module Active Command Index

SCIL Module Active Command Index

Active Command	Display	Action
PID LATCH	PID LATCH	ON, OFF
ONE TOUCH WINDOW DWN & ACCY DELAY	ACCY RLY	ON, OFF
WARNING LAMPS AND CHIME	CHIME	ON, OFF
WARNING LAMPS AND CHIME	ANTI-THEFT	ON, OFF
WARNING LAMPS AND CHIME	AUTOLMP	ON, OFF
WARNING LAMPS AND CHIME	HIGH BEAM	ON, OFF
INTERIOR COURTESY LAMPS	INT LAMPS	ON, OFF
INTERIOR COURTESY LAMPS	MIRRORLAMP	ON, OFF
DECKLID RELEASE	RELEASE	ON, OFF
TURN SIGNAL AND MARKER LAMPS	LF TURN	ON, OFF
TURN SIGNAL AND MARKER LAMPS	RF TURN	ON, OFF
TURN SIGNAL AND MARKER LAMPS	LR TURN	ON, OFF
TURN SIGNAL AND MARKER LAMPS	RR TURN	ON, OFF
TURN SIGNAL AND MARKER LAMPS	PARKLAMPS	ON, OFF
HEADLAMP CONTROL	LEFT LOW	ON, OFF

(Continued)

SCIL Module Active Command Index

Active Command	Display	Action
HEADLAMP CONTROL	RIGHT LOW	ON, OFF
HEADLAMP CONTROL	HIGH BEAM	ON, OFF
HEADLAMP CONTROL	DRUN LAMP	ON, OFF
HEADLAMP CONTROL	LF CORNER	ON, OFF
HEADLAMP CONTROL	RF CORNER	ON, OFF
HORN CONTROL	HORN	ON, OFF
BACKLIGHTING INTENSITY	INTENSITY	0-100%
COURTESY LAMP INTENSITY	INTENSITY	0-100%
DOOR AJAR SIGNAL	DOOR AJAR	ON, OFF
TRANSMIT SIGNAL COMMAND	TRANSMIT	ON, OFF
BRAKE SYSTEM	BRK/SHIFT	ON, OFF
BRAKE SYSTEM	PARK BRK	ON, OFF
STEERING COLUMN CONTROL	TILT UP	ONE SECOND TIME OUT
STEERING COLUMN CONTROL	TILT DOWN	ONE SECOND TIME OUT
STEERING COLUMN CONTROL	TELSCP IN	ONE SECOND TIME OUT
STEERING COLUMN CONTROL	TELSCPOUT	ONE SECOND TIME OUT
KEYCODE ERASE TIME SET	MINUTES	8-63 MINUTES

Official Licensed Product
Ford Motor Company

DIAGNOSIS AND TESTING (Continued)

Symptom Chart

Symptom Chart

Condition	Possible Source	Action
• No Communication With the Module — Driver Door	• Fuse. • Circuits. • Driver door module.	• GO to Pinpoint Test A.
• No Communication With the Module Steering Column/Ignition/Lighting	• Fuse. • Circuits. • Steering column/ignition/lighting module.	• GO to Pinpoint Test B.
• All Door Locks Are Inoperative	• Circuits. • Actuators. • Driver door module.	• GO to Pinpoint Test C.
• A Single Door Lock Is Inoperative	• Circuits. • Actuators. • Driver door module.	• GO to Pinpoint Test D.
• A Single Door Lock Is Inoperative Using the Driver Door Switch	• Circuits. • Actuators. • Driver door module.	• GO to Pinpoint Test E.
• The Doors Do Not Lock/Unlock Using the Keyless Entry Keypad	• Keypad • Circuits. • Actuators. • Driver door module	• GO to Pinpoint Test F.
• The Doors Do Not Lock/Unlock Using the Remote Transmitter	• Keyless entry remote transmitter. • Keyless entry remote transmitter battery. • Circuits. • Actuators. • Driver door module.	• GO to Pinpoint Test G.
• The Auto-Lock Does Not Operate Properly	• Input signals. • Driver door module.	• GO to Pinpoint Test H.
• The Smart Lock Does Not Operate Properly	• Input signals. • Driver door module.	• GO to Pinpoint Test J.
• The Luggage Compartment Door Is Inoperative Using the Keyless Entry Keypad/Remote Transmitter	• Circuits. • Actuators. • Driver door module. • Keypad. • Keyless entry remote transmitter.	• GO to Pinpoint Test K.

Official Licensed Product
Ford Motor Company

DIAGNOSIS AND TESTING (Continued)

Pinpoint Tests

PINPOINT TEST A: NO COMMUNICATION WITH THE MODULE — DRIVER DOOR

TEST CONDITIONS	TEST DETAILS/RESULTS/ACTIONS
A1 CHECK FUSE JUNCTION PANEL FUSE 41 (10A)	
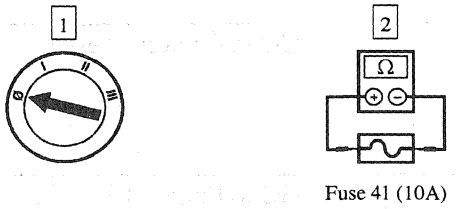	• Is the fuse OK? → **Yes** REINSTALL the fuse. GO to **A2**. → **No** REPLACE the fuse in question. TEST the system for normal operation. If the fuse fails again, CHECK for a short to ground. REPAIR as necessary.
A2 CHECK THE VOLTAGE TO THE DRIVER DOOR MODULE (DDM)	
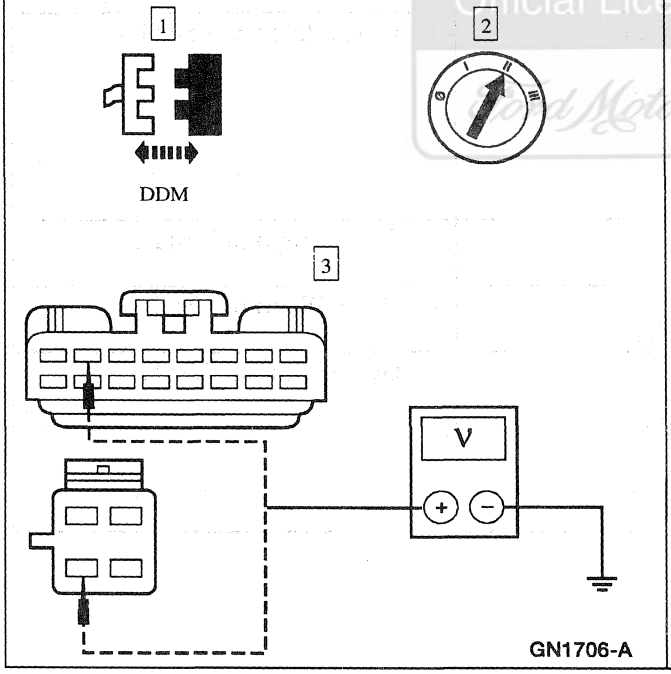	3 Measure the voltage between driver door module (DDM) C455-2, circuit 1077 (DG/P), and ground; and DDM C457-3, circuit 1077 (DG/P), and ground. • Are the voltages greater than 10 volts? → **Yes** GO to **A3**. → **No** REPAIR circuit 1077 (DG/P). TEST the system for normal operation.

(Continued)

Official Licensed Product Ford Motor Company

DIAGNOSIS AND TESTING (Continued)

PINPOINT TEST A: NO COMMUNICATION WITH THE MODULE — DRIVER DOOR (Continued)

TEST CONDITIONS	TEST DETAILS/RESULTS/ACTIONS
A3 CHECK CIRCUITS 57 (BK) AND 875 (BK/LB) FOR OPEN	
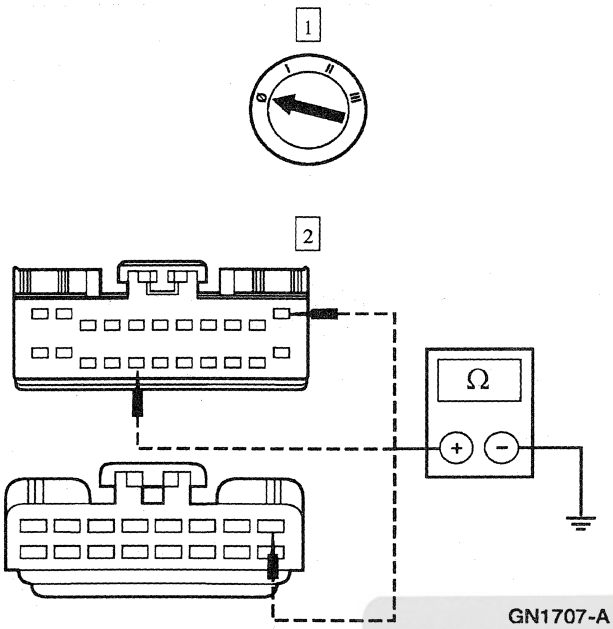	2 Measure the resistance between DDM C456-16, circuit 57 (BK), and ground; and between C456-11, circuit 57 (BK) and ground; and between C455-8, circuit 875 (BK/LB) and ground. • Are the resistances less than 5 ohms? → **Yes** REFER to Section 418-00. → **No** REPAIR the circuit in question. TEST the system for normal operation.

PINPOINT TEST B: NO COMMUNICATION WITH THE MODULE — STEERING COLUMN/IGNITION/LIGHTING (SCIL)

TEST CONDITIONS	TEST DETAILS/RESULTS/ACTIONS
B1 CHECK CIRCUIT 875 (BK/LB) FOR AN OPEN	
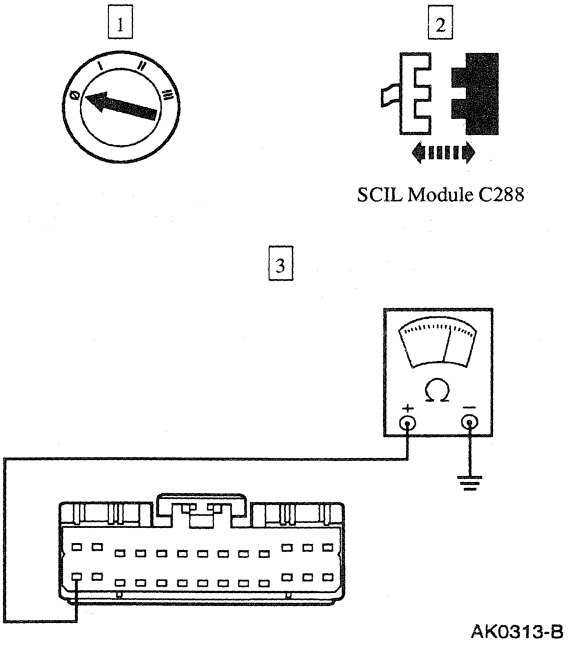	3 Measure the resistance between SCIL module C288-14, circuit 875 (BK/LB), and ground. • Is the resistance less than 5 ohms? → **Yes** GO to **B2**. → **No** REPAIR circuit 875 (BK/LB). TEST the system for normal operation.

(Continued)

DIAGNOSIS AND TESTING (Continued)

PINPOINT TEST B: NO COMMUNICATION WITH THE MODULE — STEERING COLUMN/IGNITION/LIGHTING (SCIL) (Continued)

TEST CONDITIONS	TEST DETAILS/RESULTS/ACTIONS
B2 CHECK CIRCUIT 57 (BK) FOR AN OPEN	
1 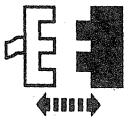 SCIL Module C287 2 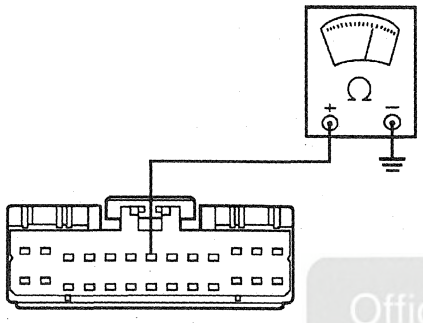 AK0314-B	2 Measure the resistance between SCIL module C287-7, circuit 57 (BK), and ground. • Is the resistance less than 5 ohms? → **Yes** GO to **B3**. → **No** REPAIR circuit 57 (BK). TEST the system for normal operation.
B3 CHECK FOR VOLTAGE TO THE STEERING COLUMN/IGNITION/LIGHTING (SCIL) MODULE	
1 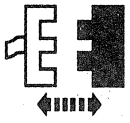 SCIL Module C289 2 3 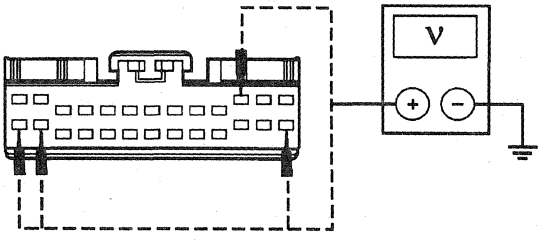 GK4906-A	3 Measure the voltage between the SCIL module C287 pins and ground; refer to the following chart: • C287-14, circuit 906 (R/O). • C287-26, circuit 19 (LB/R). • C287-15, circuit 1055 (W/LG). • C287-11, circuit 1056 (DB/LG).

Official Licensed Product
Ford Motor Company

(Continued)

DIAGNOSIS AND TESTING (Continued)

PINPOINT TEST B: NO COMMUNICATION WITH THE MODULE — STEERING COLUMN/IGNITION/LIGHTING (SCIL) (Continued)

TEST CONDITIONS	TEST DETAILS/RESULTS/ACTIONS
B3 CHECK FOR VOLTAGE TO THE STEERING COLUMN/IGNITION/LIGHTING (SCIL) MODULE (Continued)	
4 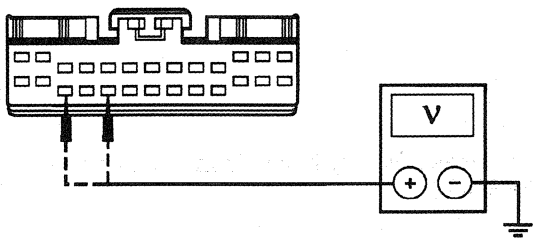 GK4907-A	4 Measure the voltage between the SCIL module C288 pins and ground; refer to the following chart: • C288-16, circuit 251 (BR/O). • C288-18, circuit 158 (BK/PK).
5 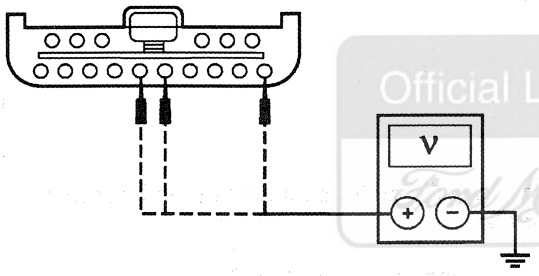 GK4908-A	5 Measure the voltage between the SCIL module C289 pins and ground; refer to the following chart: • C289-5, circuit 1058 (BR/W). • C289-6, circuit 1057 (O/BK). • C289-1, circuit 1046 (T). • Are all the voltages greater than 10 volts? → **Yes** REFER to Section 418-00. → **No** REPAIR the circuit in question. TEST the system for normal operation.

Official Licensed Part Ford Motor Company

PINPOINT TEST C: ALL DOOR LOCKS ARE INOPERATIVE

TEST CONDITIONS	TEST DETAILS/RESULTS/ACTIONS
C1 VERIFY THE DOOR LOCK SWITCHES ARE OPERATIONAL	
	1 Verify the door lock switches are operational. • Do the doors lock and unlock from the door lock switches? → **Yes** GO to **C2**. → **No** REFER to Section 501-14A.

(Continued)

DIAGNOSIS AND TESTING (Continued)

PINPOINT TEST C: ALL DOOR LOCKS ARE INOPERATIVE (Continued)

TEST CONDITIONS	TEST DETAILS/RESULTS/ACTIONS
C2 CHECK THE DOOR LOCK OPERATION FROM THE REMOTE TRANSMITTER AND FROM THE KEYPAD — MONITOR THE DDM PID KEYCODE	
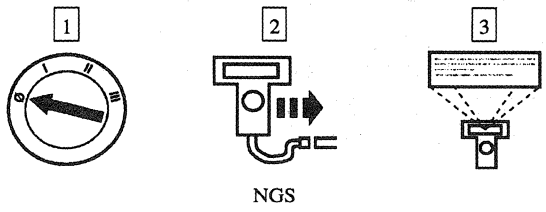 NGS 4 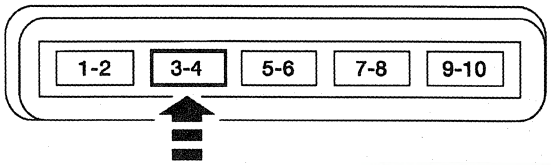 GN1724-A 5 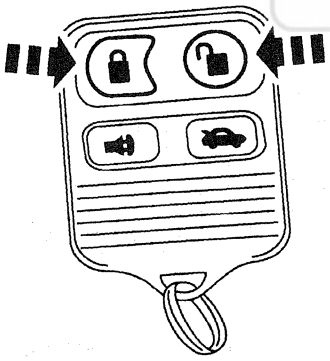 GN1723-A	3 Monitor the DDM PID KEYCODE. 4 Enter the correct factory keycode into the key pad; press the 3/4 key. 5 Press the unlock and lock buttons on both remote transmitters twice. • Do the doors unlock or lock? → **Yes** If the doors unlock or lock from both remote transmitters, GO to Pinpoint Test F. If the doors unlock or lock from one remote transmitter, GO to Pinpoint Test G. If the doors unlock or lock from the keypad, GO to Pinpoint Test G. → **No** REPLACE the DDM; REFER to Section 419-10. TEST the system for normal operation.

Official Licensed Product
Ford Motor Co.

DIAGNOSIS AND TESTING (Continued)

PINPOINT TEST D: A SINGLE DOOR LOCK IS INOPERATIVE

TEST CONDITIONS	TEST DETAILS/RESULTS/ACTIONS
D1 VERIFY THE DOOR LOCK SWITCHES ARE OPERATIONAL	
	1 Verify the door lock switches are operational. • Do the doors lock and unlock from the door lock switches? → **Yes** REPLACE the DDM. REFER to Section 419-10. TEST the system for normal operation. → **No** REFER to Section 501-14A.

PINPOINT TEST E: A SINGLE DOOR LOCK IS INOPERATIVE USING THE DRIVER DOOR SWITCH

TEST CONDITIONS	TEST DETAILS/RESULTS/ACTIONS
E1 VERIFY THE ANTI-THEFT IS DISARMING WITH THE KEY	
	1 Verify the anti-theft is disarming when the door is unlocked with the key. • Does the horn sound when the door is unlocked and opened with the key? → **Yes** REFER to Section 417-02. → **No** GO to **E2.**
E2 CHECK THAT ALL THE DOORS OPEN WHEN THE KEY IS TURNED THE SECOND TIME	
	1 Turn the key twice in the unlock direction. • Do all the doors unlock when the key is turned twice to unlock? → **Yes** INFORM the customer to turn the key twice to unlock in quick succession. TEST the system for normal operation. → **No** REPLACE the DDM. REFER to Section 419-10. TEST the system for normal operation.

Official Licensed Product
Ford Motor Company

DIAGNOSIS AND TESTING (Continued)

PINPOINT TEST F: THE DOORS DO NOT LOCK/UNLOCK USING THE KEYLESS ENTRY KEYPAD

TEST CONDITIONS	TEST DETAILS/RESULTS/ACTIONS
F1 CHECK THE KEYPAD FOR SHORT TO BATTERY—MONITOR THE DDM PID KEY__PAD	
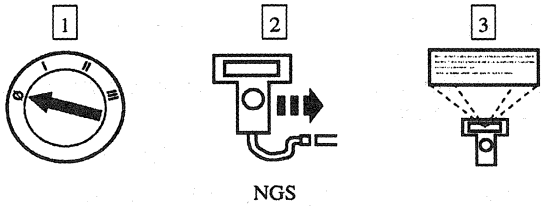	3 Monitor the DDM PID KEY__PAD. • Does the DDM PID KEY__PAD show a number? → **Yes** If more than one number is showing, REPLACE the keyless entry keypad switch assembly. REFER to Keypad. TEST the system for normal operation. If the number one is showing, GO to **F14**. If the number three is showing, GO to **F16**. If number five is showing, GO to **F18**. If the number seven is showing, GO to **F20**. If the number nine is showing, GO to **F22**. → **No** GO to **F2**.
F2 CHECK THE KEYPAD FOR OPEN — MONITOR THE DDM PID KEY__PAD	
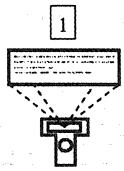	1 Monitor the DDM PID KEY__PAD.

Official Licensed Product Ford Motor Company

(Continued)

DIAGNOSIS AND TESTING (Continued)

PINPOINT TEST F: THE DOORS DO NOT LOCK/UNLOCK USING THE KEYLESS ENTRY KEYPAD (Continued)

TEST CONDITIONS	TEST DETAILS/RESULTS/ACTIONS
F2 CHECK THE KEYPAD FOR OPEN — MONITOR THE DDM PID KEY__PAD (Continued)	
2 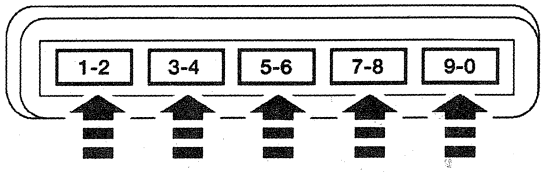 GN1726-B	2 Press key 1/2, 3/4, 5/6, 7/8, 9/10. • Do all the keys register? → **Yes** REPLACE the DDM. REFER to Section 419-10. TEST the system for normal operation. → **No** If more than one key, but not all the keys, are inoperative, REPLACE the keyless entry keypad switch assembly. REFER to Keypad. TEST the system for normal operation. If all the keys are inoperative, GO to **F3**. If key 1/2 is inoperative, GO to **F4**. If key 3/4 is inoperative, GO to **F6**. If key 5/6 is inoperative, GO to **F8**. If key 7/8 is inoperative, GO to **F10**. If key 9/10 is inoperative, GO to **F12**.
F3 CHECK CIRCUIT 1077 (DG/P) FOR VOLTAGE	
1 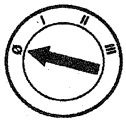 2 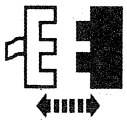 Keyless Entry Keypad Switch Assembly C510 3 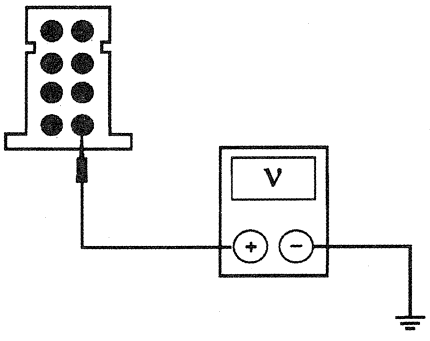 GN1709-A	3 Measure the voltage between keyless entry keypad switch assembly C510M-8, circuit 1077 (DG/P), and ground. • Is the voltage greater than 10 volts? → **Yes** REPLACE the keyless entry keypad switch assembly. REFER to Keypad. TEST the system for normal operation. → **No** REPAIR circuit 1077 (DG/P). TEST the system for normal operation.

(Continued)

Official Licensed Product Ford Motor Company

DIAGNOSIS AND TESTING (Continued)

PINPOINT TEST F: THE DOORS DO NOT LOCK/UNLOCK USING THE KEYLESS ENTRY KEYPAD (Continued)

TEST CONDITIONS	TEST DETAILS/RESULTS/ACTIONS
F4 CHECK KEY 1/2 FOR OPEN	
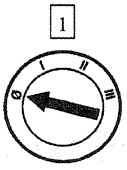 1 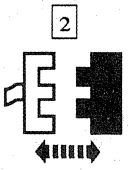 2 Keyless Entry Keypad Switch Assembly C510 3 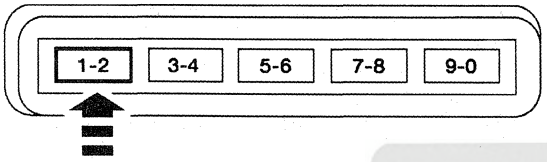 GN1727-B 4 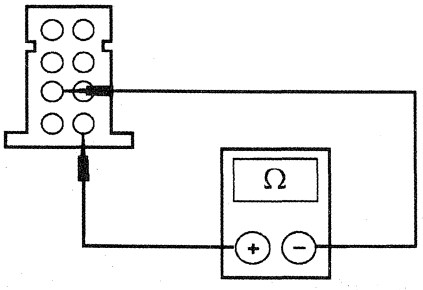 GN1710-A	3 Press and hold the 1/2 key. 4 Measure the resistance between keyless entry keypad switch assembly C510F-8, circuit 1077 (DG/P), and C510F-5, circuit 78 (LB/Y). • Is the resistance less than 5 ohms? → **Yes** GO to **F5**. → **No** REPLACE the keyless entry keypad switch assembly. REFER to Keypad. TEST the system for normal operation.

Official Licensed Product
Ford Motor Company

(Continued)

DIAGNOSIS AND TESTING (Continued)

PINPOINT TEST F: THE DOORS DO NOT LOCK/UNLOCK USING THE KEYLESS ENTRY KEYPAD (Continued)

TEST CONDITIONS	TEST DETAILS/RESULTS/ACTIONS
F5 CHECK CIRCUIT 78 (LB/Y) FOR OPEN	
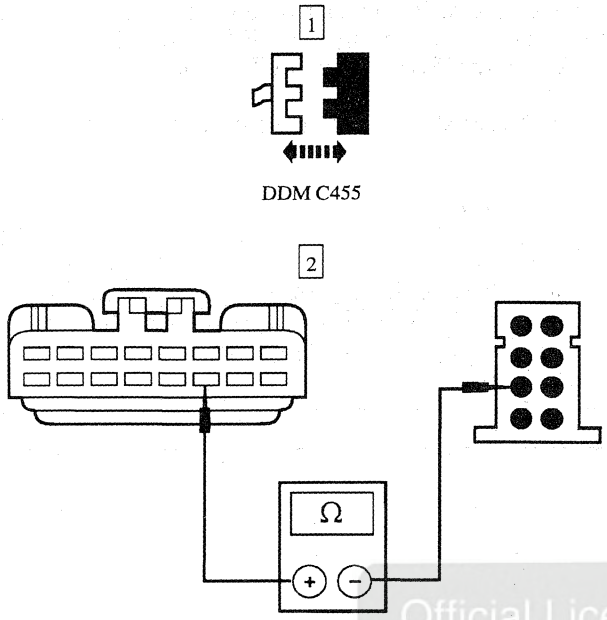 GN1711-A	2 Measure the resistance between DDM C455-14, circuit 78 (LB/Y), and keyless entry keypad switch assembly C510M-5, circuit 78 (LB/Y). • Is the resistance less than 5 ohms? → **Yes** REPLACE the DDM. REFER to Section 419-10. TEST the system for normal operation. → **No** REPAIR circuit 78 (LB/Y). TEST the system for normal operation.
F6 CHECK KEY 3/4 FOR OPEN	
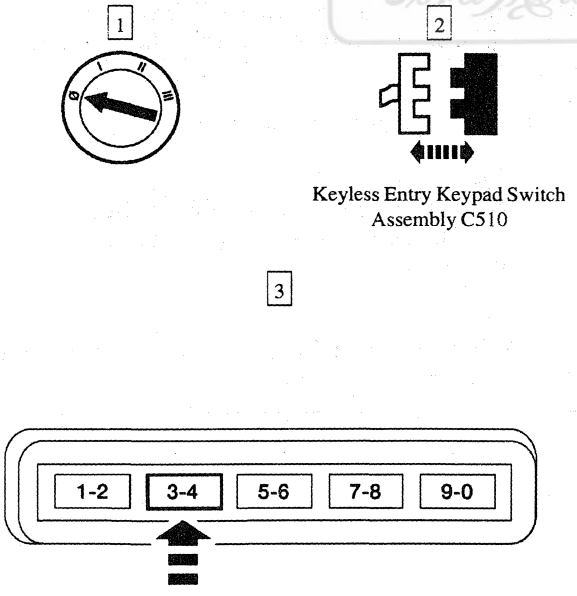 GN1724-B	3 Press and hold the 3/4 key.

(Continued)

Official Licensed Product Ford Motor Company

DIAGNOSIS AND TESTING (Continued)

PINPOINT TEST F: THE DOORS DO NOT LOCK/UNLOCK USING THE KEYLESS ENTRY KEYPAD (Continued)

TEST CONDITIONS	TEST DETAILS/RESULTS/ACTIONS
F6 CHECK KEY 3/4 FOR OPEN (Continued)	
4 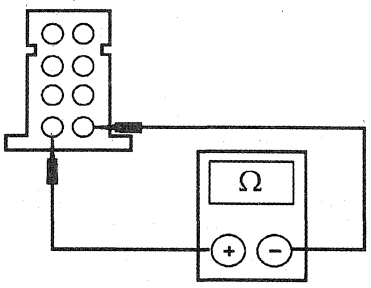 GN1712-A	4 Measure the resistance between keyless entry keypad switch assembly C510F-8, circuit 1077 (DG/P), and C510F-7, circuit 79 (LG/R). • Is the resistance less than 5 ohms? → **Yes** GO to **F7**. → **No** REPLACE the keyless entry keypad switch assembly. REFER to Keypad. TEST the system for normal operation.
F7 CHECK CIRCUIT 79 (LG/R) FOR OPEN	
1 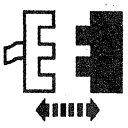 DDM C455 2 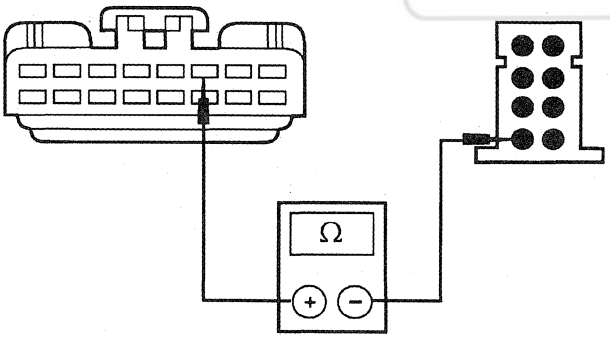 GN1713-A	2 Measure the resistance between DDM C455-6, circuit 79 (LG/R), and keyless entry keypad switch assembly C510M-7, circuit 79 (LG/R). • Is the resistance less than 5 ohms? → **Yes** REPLACE the DDM. REFER to Section 419-10. TEST the system for normal operation. → **No** REPAIR circuit 79 (LG/R). TEST the system for normal operation.

(Continued)

Official Licensed Product
Ford Motor Company

DIAGNOSIS AND TESTING (Continued)

PINPOINT TEST F: THE DOORS DO NOT LOCK/UNLOCK USING THE KEYLESS ENTRY KEYPAD (Continued)

TEST CONDITIONS	TEST DETAILS/RESULTS/ACTIONS
F8 CHECK KEY 5/6 FOR OPEN	
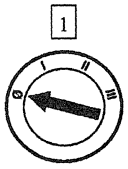 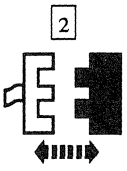 Keyless Entry Keypad Switch Assembly C510 3 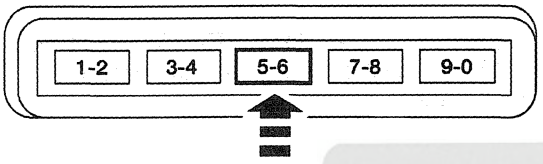 GN1725-B 4 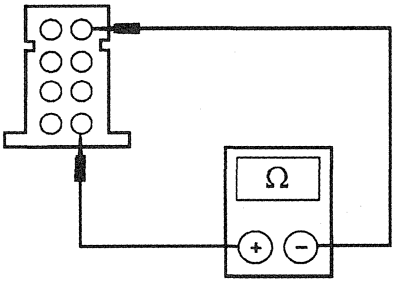 GN1714-A	3 Press and hold the 5/6 key. 4 Measure the resistance between keyless entry keypad switch assembly C510F-8, circuit 1077 (DG/P), and C510F-2, circuit 121 (Y/BK). • Is the resistance less than 5 ohms? → **Yes** GO to **F9**. → **No** REPLACE the keyless entry keypad switch assembly. REFER to Keypad. TEST the system for normal operation.

Official Licensed Product
Ford Motor Company

(Continued)

DIAGNOSIS AND TESTING (Continued)

PINPOINT TEST F: THE DOORS DO NOT LOCK/UNLOCK USING THE KEYLESS ENTRY KEYPAD (Continued)

TEST CONDITIONS	TEST DETAILS/RESULTS/ACTIONS
F9 CHECK CIRCUIT 121 (Y/BK) FOR OPEN	
1 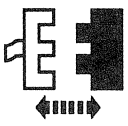 DDM C455 2 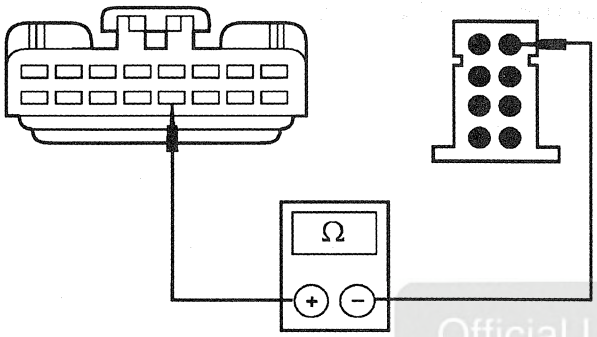 GN1715-A	2 Measure the resistance between DDM C455-13, circuit 121 (Y/BK), and keyless entry keypad switch assembly C510M-2, circuit 121 (Y/BK). • Is the resistance less than 5 ohms? → **Yes** REPLACE the DDM. REFER to Section 419-10. TEST the system for normal operation. → **No** REPAIR circuit 121 (Y/BK). TEST the system for normal operation.
F10 CHECK KEY 7/8 FOR OPEN	
1 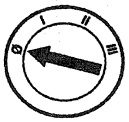 2 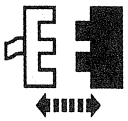 Keyless Entry Keypad Switch Assembly C510 3 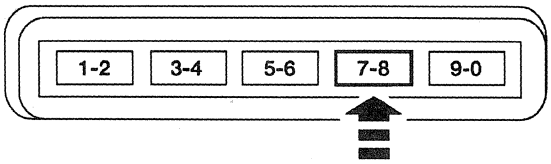 GN1728-B	3 Press and hold the 7/8 key.

(Continued)

Official Licensed Ford Motor Company

DIAGNOSIS AND TESTING (Continued)

PINPOINT TEST F: THE DOORS DO NOT LOCK/UNLOCK USING THE KEYLESS ENTRY KEYPAD (Continued)

TEST CONDITIONS	TEST DETAILS/RESULTS/ACTIONS
F10 CHECK KEY 7/8 FOR OPEN (Continued)	
4 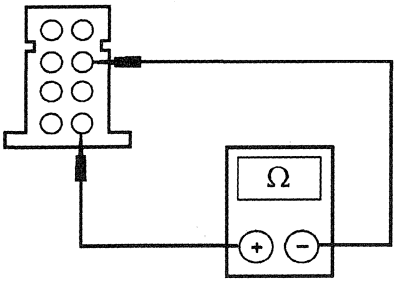 GN1716-A	4 Measure the resistance between keyless entry keypad switch assembly C510F-8, circuit 1077 (DG/P), and C510F-4, circuit 122 (Y). • Is the resistance less than 5 ohms? → **Yes** GO to **F11**. → **No** REPLACE the keyless entry keypad switch assembly. REFER to Keypad. TEST the system for normal operation.
F11 CHECK CIRCUIT 122 (Y) FOR OPEN	
1 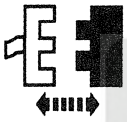 DDM C455 2 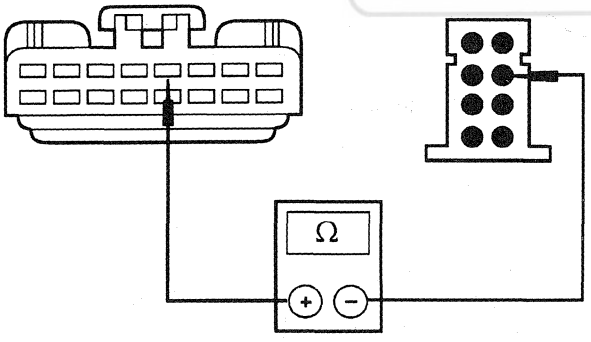 GN1717-A	2 Measure the resistance between DDM C455-5, circuit 122 (Y), and keyless entry keypad switch assembly C510M-4, circuit 122 (Y). • Is the resistance less than 5 ohms? → **Yes** REPLACE the DDM. REFER to Section 419-10. TEST the system for normal operation. → **No** REPAIR circuit 122 (Y). TEST the system for normal operation.

(Continued)

Official Licensed Product
Ford Motor Company

DIAGNOSIS AND TESTING (Continued)

PINPOINT TEST F: THE DOORS DO NOT LOCK/UNLOCK USING THE KEYLESS ENTRY KEYPAD (Continued)

TEST CONDITIONS	TEST DETAILS/RESULTS/ACTIONS
F12 CHECK KEY 9/10 FOR OPEN	
1 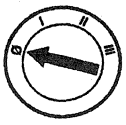 2 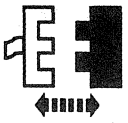 Keyless Entry Keypad Switch Assembly C510	
3 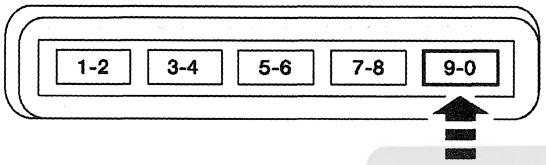 GN1729-B	3 Press and hold the 9/10 key.
4 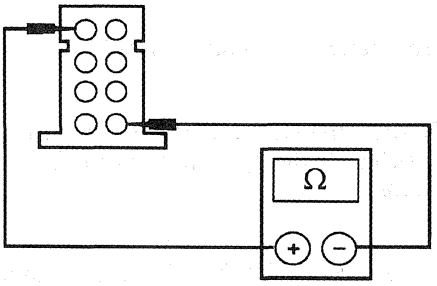 GN1718-A	4 Measure the resistance between keyless entry keypad switch assembly C510F-8, circuit 1077 (DG/P), and C510F-1, circuit 123 (R). • Is the resistance less than 5 ohms? → **Yes** GO to **F13**. → **No** REPLACE the keyless entry keypad switch assembly. REFER to Keypad. TEST the system for normal operation.

Official Licensed Product
Ford Motor Company

(Continued)

DIAGNOSIS AND TESTING (Continued)

PINPOINT TEST F: THE DOORS DO NOT LOCK/UNLOCK USING THE KEYLESS ENTRY KEYPAD (Continued)

TEST CONDITIONS	TEST DETAILS/RESULTS/ACTIONS
F13 CHECK CIRCUIT 123 (R) FOR OPEN	
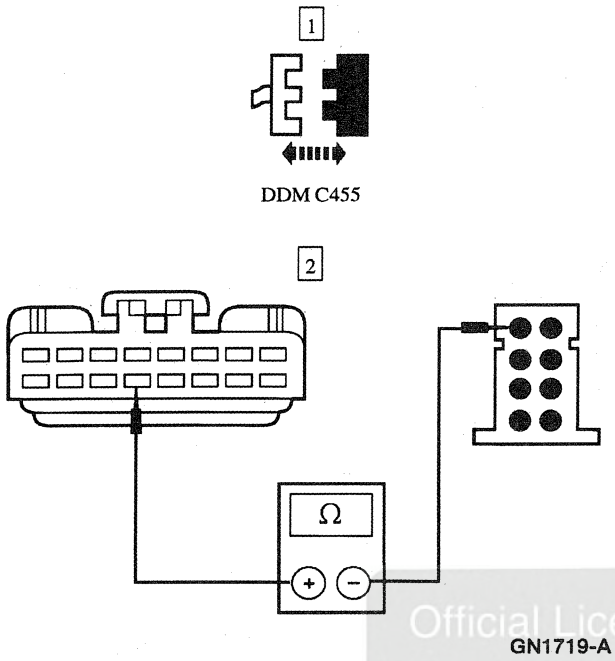	2 Measure the resistance between DDM C455-12, circuit 123 (R), and keyless entry keypad switch assembly C510M-1, circuit 123 (R). • Is the resistance less than 5 ohms? → **Yes** REPLACE the DDM. REFER to Section 419-10. TEST the system for normal operation. → **No** REPAIR circuit 123 (R). TEST the system for normal operation.
F14 CHECK THE 1/2 KEY SWITCH FOR SHORT TO GROUND	
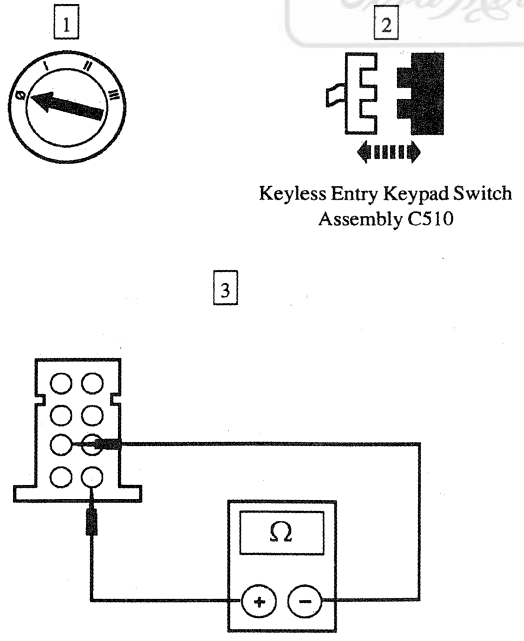	3 Measure the resistance between keyless entry keypad switch assembly C510F-8, circuit 1077 (DG/P), and C510F-5, circuit 78 (LB/Y). • Is the resistance greater than 10,000 ohms? → **Yes** GO to **F15**. → **No** REPLACE the keyless entry keypad switch assembly. REFER to Keypad. TEST the system for normal operation.

Official Licensed Product
Ford Motor Company

(Continued)

DIAGNOSIS AND TESTING (Continued)

PINPOINT TEST F: THE DOORS DO NOT LOCK/UNLOCK USING THE KEYLESS ENTRY KEYPAD (Continued)

TEST CONDITIONS	TEST DETAILS/RESULTS/ACTIONS
F15 CHECK CIRCUIT 78 (LB/Y) FOR SHORT TO POWER	
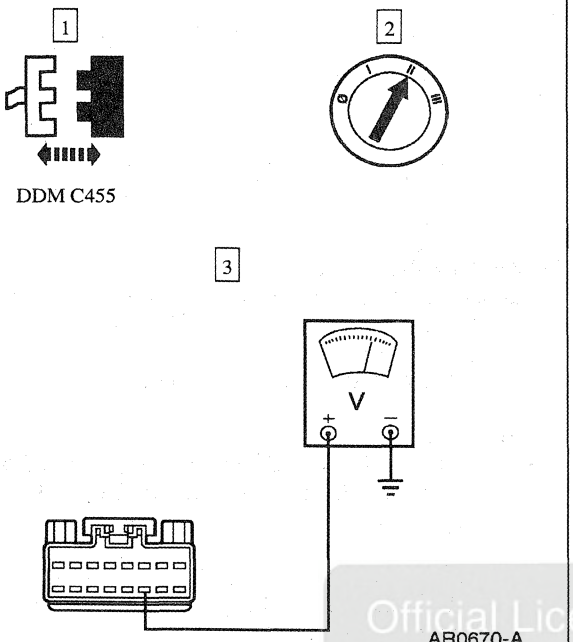	3 Measure the voltage between DDM C455-14, circuit 78 (LB/Y), and ground. • Is any voltage indicated? → **Yes** REPAIR circuit 78 (LB/Y). TEST the system for normal operation. → **No** REPLACE the DDM. REFER to Section 419-10. TEST the system for normal operation.
F16 CHECK THE 3/4 KEY SWITCH FOR SHORT TO GROUND	
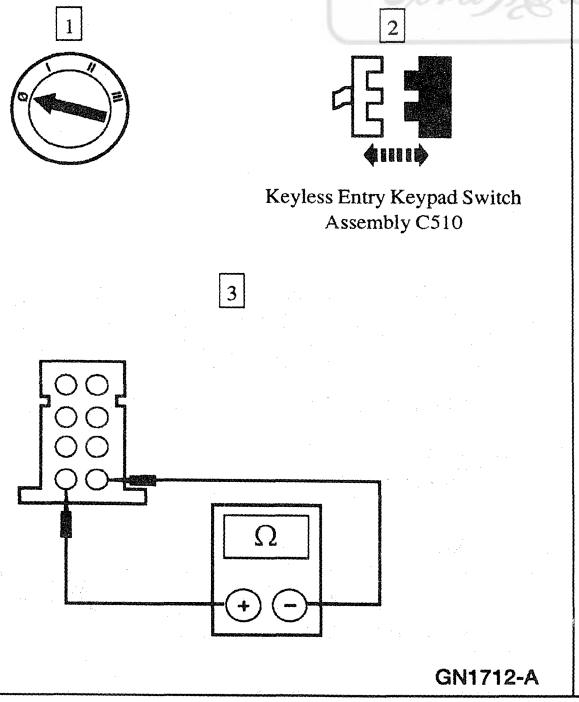	3 Measure the resistance between keyless entry keypad switch assembly C510F-8, circuit 1077 (DG/P), and C510F-7, circuit 79 (LG/R). • Is the resistance greater than 10,000 ohms? → **Yes** GO to **F17**. → **No** REPLACE the keyless entry keypad switch assembly. REFER to Keypad. TEST the system for normal operation.

Official Licensed Product Ford Motor Company

(Continued)

DIAGNOSIS AND TESTING (Continued)

PINPOINT TEST F: THE DOORS DO NOT LOCK/UNLOCK USING THE KEYLESS ENTRY KEYPAD (Continued)

TEST CONDITIONS	TEST DETAILS/RESULTS/ACTIONS
F17 CHECK CIRCUIT 79 (LG/R) FOR SHORT TO POWER	
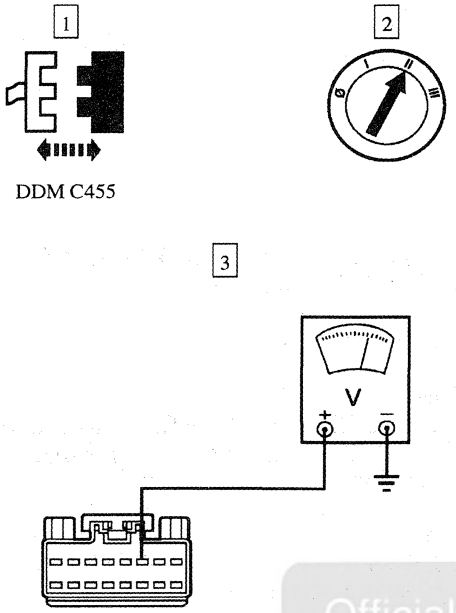	3 Measure the voltage between DDM C455-6, circuit 79 (LG/R), and ground. • Is any voltage indicated? → **Yes** REPAIR circuit 79 (LG/R). TEST the system for normal operation. → **No** REPLACE the DDM. REFER to Section 419-10. TEST the system for normal operation.
F18 CHECK THE 5/6 KEY SWITCH FOR SHORT TO GROUND	
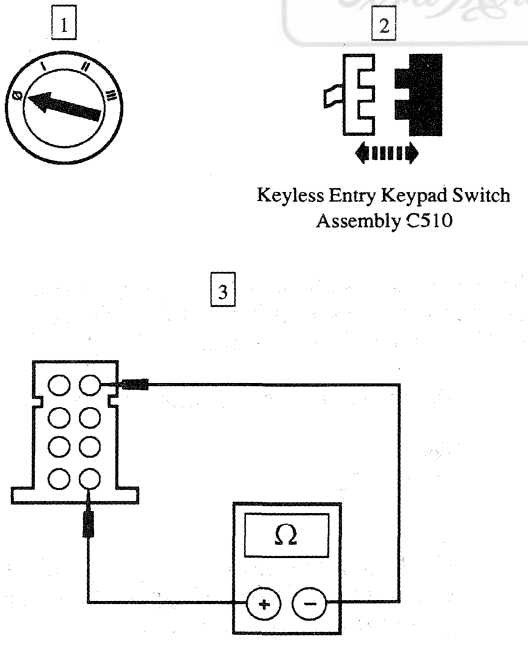	3 Measure the resistance between keyless entry keypad switch assembly C510F-8, circuit 1077 (DG/P), and C510F-2, circuit 121 (Y/BK). • Is the resistance greater than 10,000 ohms? → **Yes** GO to **F19**. → **No** REPLACE the keyless entry keypad switch assembly. REFER to Keypad. TEST the system for normal operation.

Official Licensed Product Ford Motor Company

(Continued)

DIAGNOSIS AND TESTING (Continued)

PINPOINT TEST F: THE DOORS DO NOT LOCK/UNLOCK USING THE KEYLESS ENTRY KEYPAD (Continued)

TEST CONDITIONS	TEST DETAILS/RESULTS/ACTIONS
F19 CHECK CIRCUIT 121 (Y/BK) FOR SHORT TO POWER	
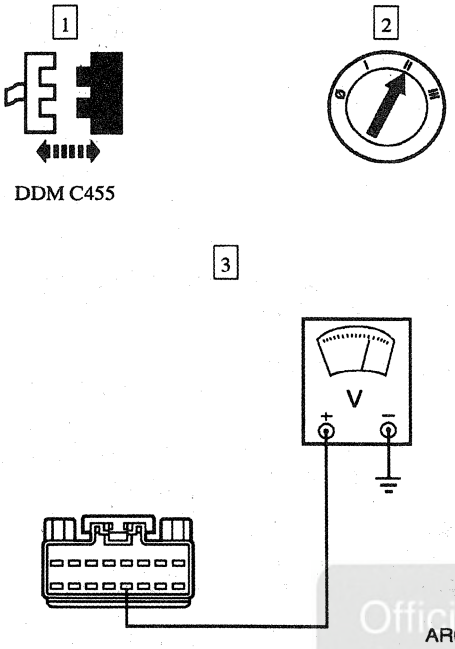	3 Measure the voltage between DDM C455-13, circuit 121 (Y/BK), and ground. • Is any voltage indicated? → **Yes** REPLACE the DDM. REFER to Section 419-10. TEST the system for normal operation. → **No** REPAIR circuit 121 (Y/BK). TEST the system for normal operation.
F20 CHECK THE 7/8 KEY SWITCH FOR SHORT TO GROUND	
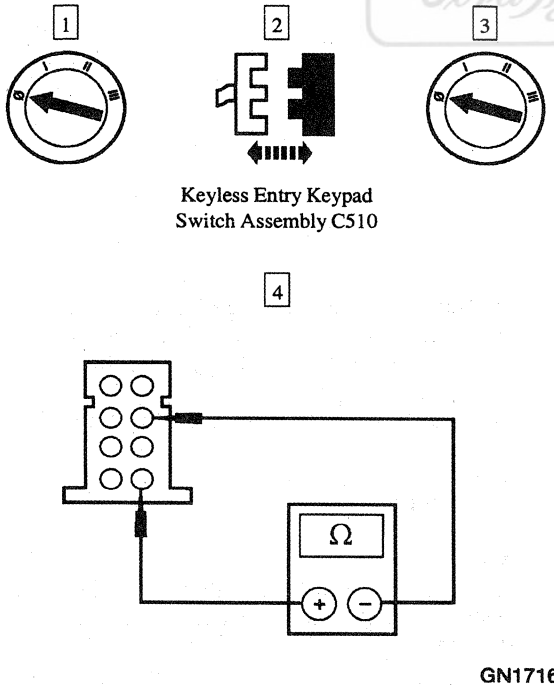	4 Measure the resistance between keyless entry keypad switch assembly C510F-8, circuit 1077 (DG/P), and C510F-4, circuit 122 (Y). • Is the resistance greater than 10,000 ohms? → **Yes** GO to **F21**. → **No** REPLACE the keyless entry keypad switch assembly. REFER to Keypad. TEST the system for normal operation.

Official Licensed Product Ford Motor Company

(Continued)

DIAGNOSIS AND TESTING (Continued)

PINPOINT TEST F: THE DOORS DO NOT LOCK/UNLOCK USING THE KEYLESS ENTRY KEYPAD (Continued)

TEST CONDITIONS	TEST DETAILS/RESULTS/ACTIONS
F21 CHECK CIRCUIT 122 (Y) FOR SHORT TO POWER	
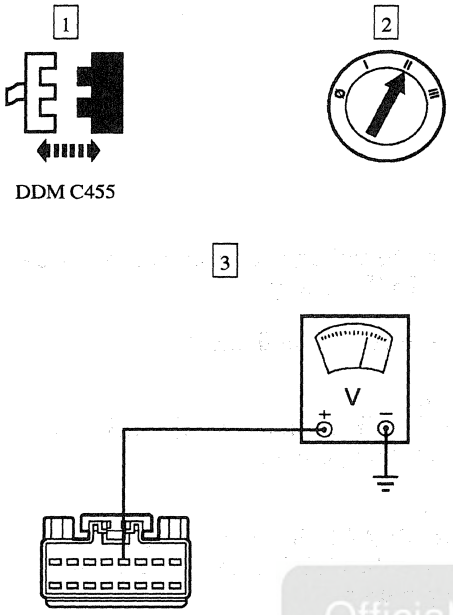	3 Measure the voltage between DDM C455-5, circuit 122 (Y), and ground. • Is any voltage indicated? → **Yes** REPAIR circuit 122 (Y). TEST the system for normal operation. → **No** REPLACE the DDM. REFER to Section 419-10. TEST the system for normal operation.
F22 CHECK THE 9/10 KEY SWITCH FOR SHORT TO GROUND	
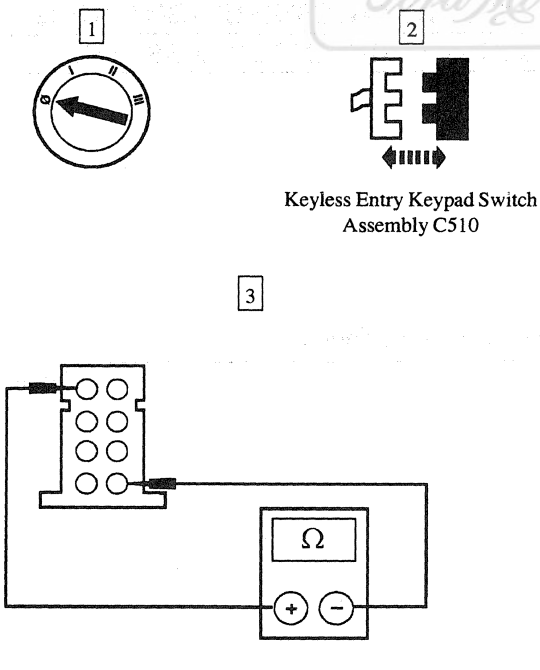	3 Measure the resistance between keyless entry keypad switch assembly C510F-8, circuit 1077 (DG/P), and C510F-1, circuit 123 (R). • Is the resistance greater than 10,000 ohms? → **Yes** GO to **F23**. → **No** REPLACE the keyless entry keypad switch assembly. REFER to Keypad. TEST the system for normal operation.

Official Licensed Product Ford Motor Company

(Continued)

DIAGNOSIS AND TESTING (Continued)

PINPOINT TEST F: THE DOORS DO NOT LOCK/UNLOCK USING THE KEYLESS ENTRY KEYPAD (Continued)

TEST CONDITIONS	TEST DETAILS/RESULTS/ACTIONS
F23 CHECK CIRCUIT 123 (R) FOR SHORT TO POWER	
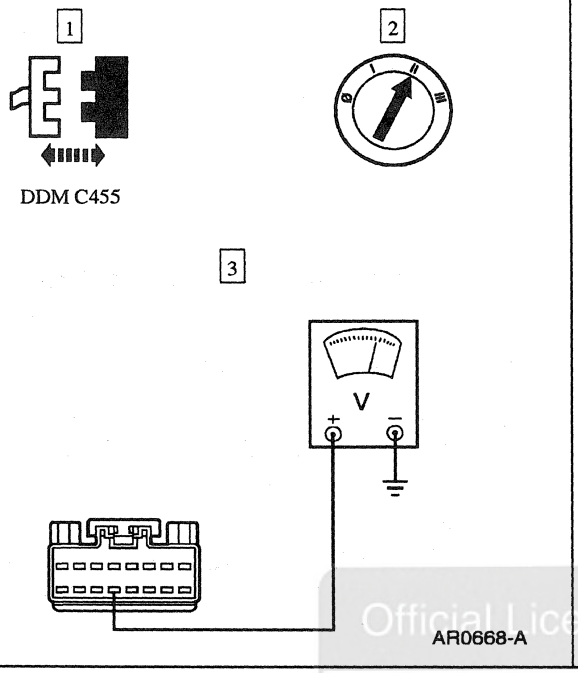	3 Measure the voltage between DDM C455-12, circuit 123 (R), and ground. • Is any voltage indicated? → **Yes** REPAIR circuit 123 (R). TEST the system for normal operation. → **No** REPLACE the DDM. REFER to Section 419-10. TEST the system for normal operation.

PINPOINT TEST G: THE DOORS DO NOT LOCK/UNLOCK USING THE REMOTE TRANSMITTER

TEST CONDITIONS	TEST DETAILS/RESULTS/ACTIONS
G1 VERIFY THAT BOTH REMOTE TRANSMITTERS ARE TRANSMITTING LOCK SIGNALS	
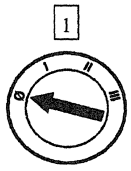	2 Unlock all the doors.

(Continued)

DIAGNOSIS AND TESTING (Continued)

PINPOINT TEST G: THE DOORS DO NOT LOCK/UNLOCK USING THE REMOTE TRANSMITTER (Continued)

TEST CONDITIONS	TEST DETAILS/RESULTS/ACTIONS
G1 VERIFY THAT BOTH REMOTE TRANSMITTERS ARE TRANSMITTING LOCK SIGNALS (Continued)	
3 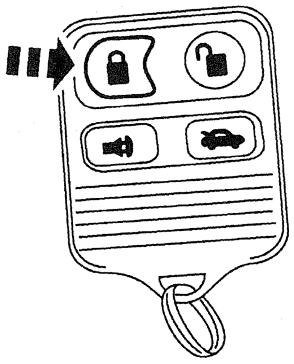 GN1722-A	3 Press the lock button on both remote transmitters. • Do the doors lock from both remote transmitters? → **Yes** GO to **G3**. → **No** GO to **G2**.
G2 CHECK FOR CORRECT SERIAL NUMBERS WITH THE LOCK CODE	
1 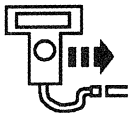 NGS 2 3 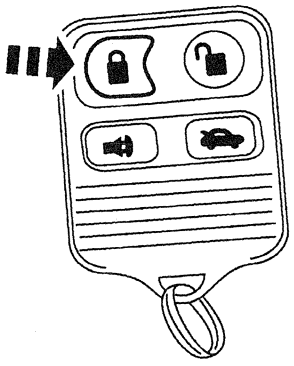 GN1722-A	2 Monitor the Function TRANSMITTER TIC/DATA. 3 Press lock button on the transmitter(s) in question. • Does the serial number match the serial code programmed in to the driver door module (DDM) and is the lock code received on the NGS? → **Yes** REPLACE the DDM. REFER to Section 419-10. TEST the system for normal operation. → **No** If the serial code does not match the code in the DDM, REPROGRAM the DDM for the correct remote transmitter codes; REFER to Programming — Keyless Entry Remote Transmitter. INFORM the customer that their code had been changed. TEST the system for normal operation. If the lock code is not received, REPLACE the remote transmitter in question. TEST the system for normal operation.

Official Licensed Product
Ford Motor Company

(Continued)

DIAGNOSIS AND TESTING (Continued)

PINPOINT TEST G: THE DOORS DO NOT LOCK/UNLOCK USING THE REMOTE TRANSMITTER (Continued)

TEST CONDITIONS	TEST DETAILS/RESULTS/ACTIONS
G3 VERIFY THAT BOTH REMOTE TRANSMITTERS ARE TRANSMITTING UNLOCK SIGNALS	
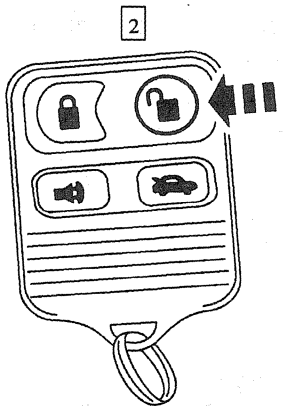 GN1720-A	1 Lock all the doors. 2 Press the unlock button on both remote transmitters. • Do the doors unlock from both remote transmitters? → **Yes** System OK. → **No** GO to **G4**.
G4 CHECK FOR CORRECT SERIAL NUMBERS WITH THE UNLOCK CODE	
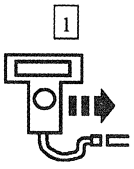 NGS 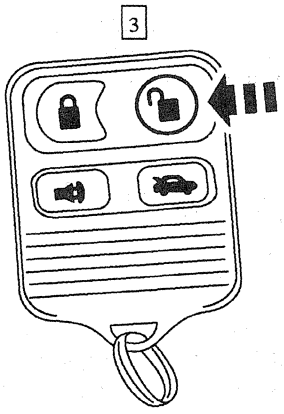 GN1720-A	2 Monitor the Function TRANSMITTER TIC/DATA. 3 Press unlock button on the transmitter(s) in question. • Is the unlock code received on the NGS? → **Yes** REPLACE the DDM. REFER to Section 419-10. TEST the system for normal operation. → **No** If the unlock code is not received, REPLACE the remote transmitter in question. TEST the system for normal operation.

Official Licensed Product Ford Motor Company

PINPOINT TEST H: THE AUTO-LOCK DOES NOT OPERATE PROPERLY

TEST CONDITIONS	TEST DETAILS/RESULTS/ACTIONS
H1 CHECK THE MESSAGE CENTER FOR FEATURE DISABLED	
	1 Check the message center DRIVER SETTINGS menu.

(Continued)

DIAGNOSIS AND TESTING (Continued)

PINPOINT TEST H: THE AUTO-LOCK DOES NOT OPERATE PROPERLY (Continued)

TEST CONDITIONS	TEST DETAILS/RESULTS/ACTIONS
H1 CHECK THE MESSAGE CENTER FOR FEATURE DISABLED (Continued)	
	2 Verify that AUTO-LOCK is not turned OFF. • Is AUTO-LOCK turned OFF? → **Yes** TURN feature ON through the message center. TEST the system for normal operation. → **No** GO to **H2**.
H2 RETRIEVE THE DIAGNOSTIC TROUBLE CODES (DTCS)	
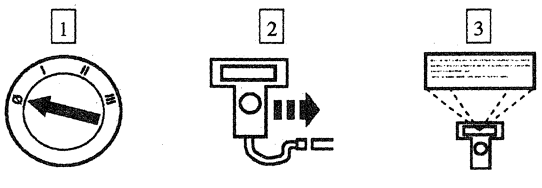	3 Retrieve the continuous and on-demand DTCs. • Are DTCs U1041, U1059, U1135 or U1199 retrieved? → **Yes** REFER to DDM Diagnostic Trouble Code (DTC) Index. → **No** GO to **H3**.
H3 CHECK THE DRIVER DOOR MODULE CONTROL OF THE LOCKS — TRIGGER THE DDM ACTIVE COMMAND DOOR LOCK CONTROL	
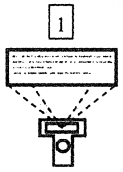	1 Trigger the DDM active command DOOR LOCK CONTROL to LOCK and UNLOCK. • Do the doors lock then unlock? → **Yes** REPLACE the DDM; REFER to Section 419-10. TEST the system for normal operation. → **No** REFER to Section 501-14A.

Official Licensed Product

DIAGNOSIS AND TESTING (Continued)

PINPOINT TEST J: THE SMART LOCK DOES NOT OPERATE PROPERLY

TEST CONDITIONS	TEST DETAILS/RESULTS/ACTIONS
J1 RETRIEVE THE DIAGNOSTIC TROUBLE CODES (DTCS)	
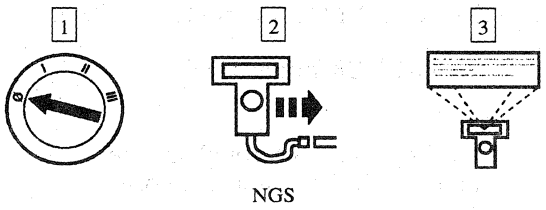	3 Retrieve the continuous and on-demand DTCs. • Is DTC U1135 or U1199 retrieved? → **Yes** REFER to DDM Diagnostic Trouble Code (DTC) Index. → **No** GO to **J2**.
J2 MONITOR THE DDM PID IGN__KEY	
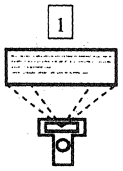	1 Monitor the DDM PID IGN__KEY. 2 Insert and remove the ignition key from the ignition. • Does the DDM PID IGN__KEY indicate IN and OUT? → **Yes** GO to **J3**. → **No** REFER to Section 413-09.
J3 MONITOR THE DDM PID D__DR__DD	
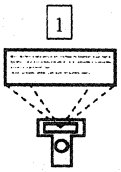	1 Monitor the DDM PID D__DR__DD. 2 Open and close the driver door. • Does the DDM PID D__DR__DD indicate AJAR and CLOSED? → **Yes** GO to **J4**. → **No** REFER to Section 417-02.

Official Licensed Product
Ford Motor Company

(Continued)

DIAGNOSIS AND TESTING (Continued)

PINPOINT TEST J: THE SMART LOCK DOES NOT OPERATE PROPERLY (Continued)

TEST CONDITIONS	TEST DETAILS/RESULTS/ACTIONS
J4 CHECK FOR PASSENGER DOOR AJAR — MONITOR THE SCIL PID P__DR__SW	
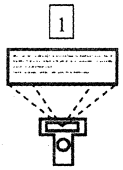	1 Monitor the SCIL PID P__DR__SW. 2 Open and close the passenger door. • Does the SCIL PID P__DR__SW indicate AJAR and CLOSED? → **Yes** GO to **J5**. → **No** REFER to Section 417-02.
J5 CHECK LOCK OPERATION — TRIGGER THE DDM ACTIVE COMMAND DOOR LOCK CONTROL	
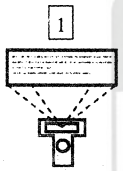	1 Trigger the DDM active command DOOR LOCK CONTROL to LOCK and UNLOCK. 2 Do the doors lock and unlock? • → **Yes** REPLACE the DDM; REFER to Section 419-10. TEST the system for normal operation. → **No** REFER to Section 501-14A.

Official Licensed Ford Motor Company

DIAGNOSIS AND TESTING (Continued)

PINPOINT TEST K: THE LUGGAGE COMPARTMENT DOOR IS INOPERATIVE USING THE KEYLESS ENTRY KEYPAD/REMOTE TRANSMITTER

TEST CONDITIONS	TEST DETAILS/RESULTS/ACTIONS
K1 CHECK THE LOCK/LATCH OPERATION	
	1 Unlock and open the luggage compartment door using the key in the door lock cylinder. • Does the manual lock/latch release the luggage compartment door? → **Yes** GO to **K2**. → **No** REPAIR/REPLACE the lock and latch. REFER to Section 501-14A. TEST the system for normal operation.
K2 CHECK THE TRUNK LID RELEASE SWITCH	
	1 Press the trunk lid release switch. • Does the luggage compartment door release? → **Yes** GO to **K3**. → **No** REFER to Section 501-14A.
K3 CHECK THE KEYPAD AND REMOTE TRANSMITTER — MONITOR THE DDM PID KEYCODE	
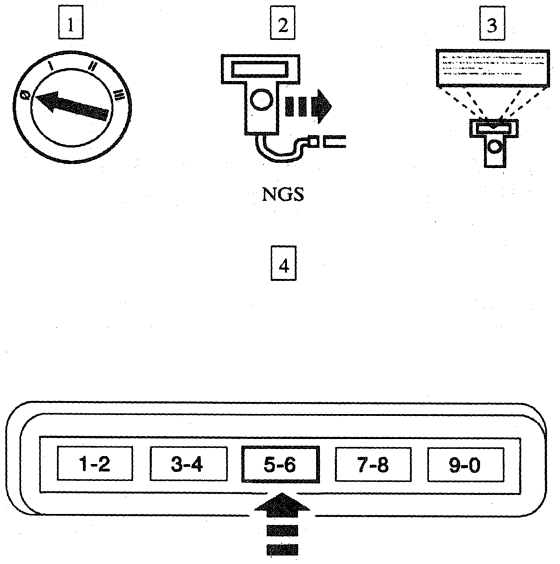	3 Monitor the DDM PID KEYCODE. 4 Enter the correct factory keycode into the keypad and then press the 5/6 key within four to six seconds.

(Continued)

Official Licensed Product
Ford Motor Company

DIAGNOSIS AND TESTING (Continued)

PINPOINT TEST K: THE LUGGAGE COMPARTMENT DOOR IS INOPERATIVE USING THE KEYLESS ENTRY KEYPAD/REMOTE TRANSMITTER (Continued)

TEST CONDITIONS	TEST DETAILS/RESULTS/ACTIONS
K3 CHECK THE KEYPAD AND REMOTE TRANSMITTER — MONITOR THE DDM PID KEYCODE (Continued)	
5 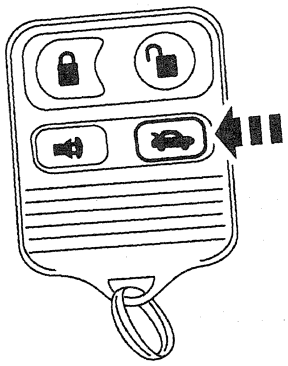 GN1721-A	5 Press the trunk button on both remote transmitters. • Does the luggage compartment door release from the keypad or from one of the remote transmitters? → **Yes** If the keypad does not release the luggage compartment door, GO to Pinpoint Test F. If both of the remote transmitters do not release the luggage compartment door, REPLACE the DDM. REFER to Section 419-10. TEST the system for normal operation. If one of the remote transmitters does not release the luggage compartment door, GO to **K4**. → **No** REPLACE the DDM. REFER to Section 419-10. TEST the system for normal operation.
K4 CHECK THE REMOTE TRANSMITTERS TRANSMIT THE TRUNK CODE	
1 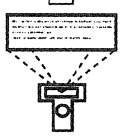 2 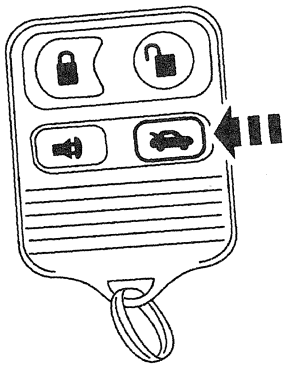 GN1721-A	1 Monitor the Function TRANSMITTER TIC/DATA. 2 Press the trunk button on both remote transmitters. • Is the trunk code received on the NGS? → **Yes** REPLACE the remote transmitter in question. TEST the system for normal operation. → **No** REPLACE the DDM. REFER to Section 419-10. TEST the system for normal operation.

Official Licensed Product

REMOVAL AND INSTALLATION

Module — Driver Door

Removal and Installation

To remove and install the driver door module (DDM); refer to Section 419-10.

Keypad

Removal

1. Remove the driver door trim panel, refer to Section 501-05.

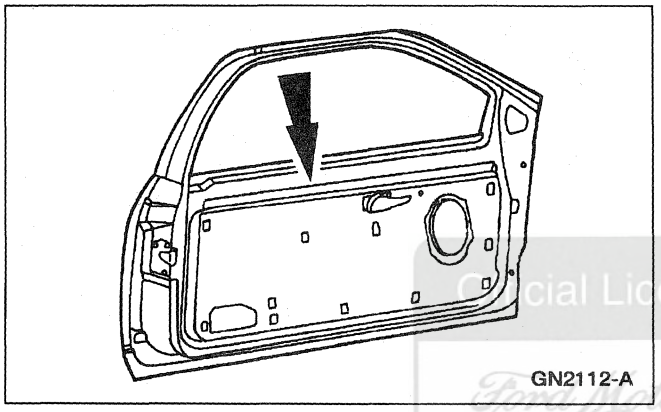

2. Remove the watershield.

Official Licensed Product
Ford Motor Company

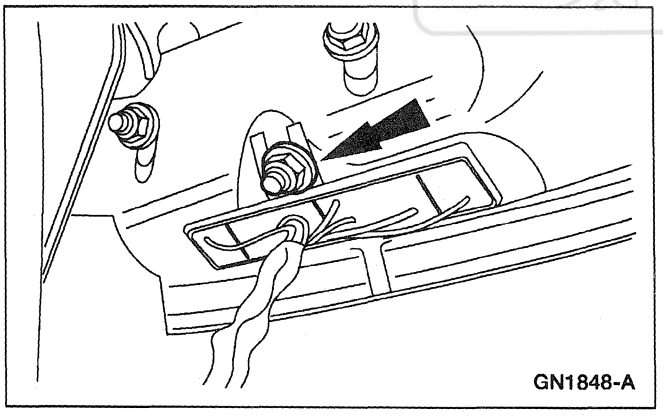

3. Remove the nut.

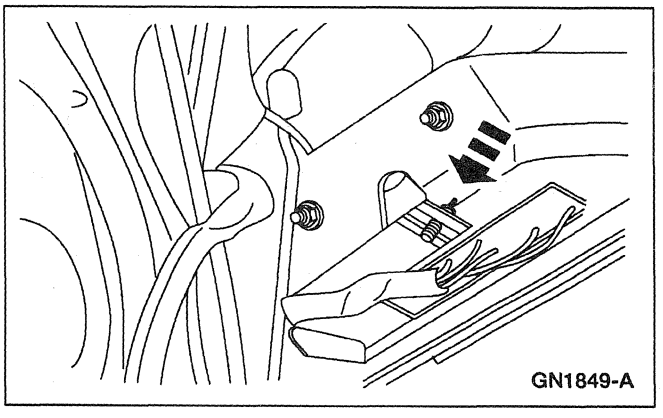

4. Remove the keypad.

REMOVAL AND INSTALLATION (Continued)

5. Disconnect the electrical connector.

Installation

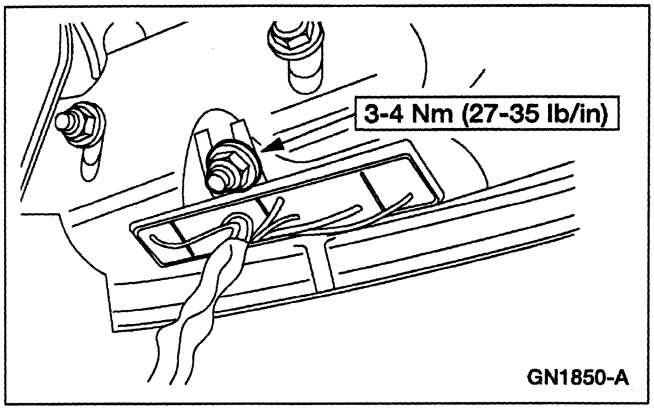

1. To install, reverse the removal procedure.

GENERAL PROCEDURES

Programming — Keyless Entry Keypad

Official Licensed Product
Ford Motor Company

1. Enter the permanent factory keyless entry keypad code.
2. Press the 1/2 button within 5 seconds to activate the programming mode. Holding the 1/2 button for more than two seconds will erase all stored customer codes. The door locks will lock, then unlock, confirming the codes are erased. The existing codes do not need to be erased to program new codes.
3. Enter the new 5 digit keyless entry keypad code.
4. To associate the new code with personality position 1 or 2, press the 1/2 button within 7.5 seconds of entering the 5th digit of the new code for position 1 or 3/4 button for position 2. The door locks will lock and unlock confirming the new code is programmed.
5. If another code is to be programmed, begin entering the code within 7.5 seconds of the last button press.

GENERAL PROCEDURES (Continued)

6. After all new keyless entry codes are programmed:
   - Transmitters can be programmed within 7.5 seconds of the last keypad code entered.
   - Press keyless entry keypad buttons 7/8 and 9/0 at the same time to exit program mode.
   - Wait for 7.5 seconds; the driver door module (DDM) will exit program mode automatically.

Programming — Keyless Entry Remote Transmitter

NOTE: The driver door module (DDM) will erase all previously stored keyless entry remote transmitters when a new transmitter is programmed. If adding an additional transmitter, the existing transmitters stored in memory must be programmed at the same time.

1. Enter the permanent factory keyless entry keypad code.

2. Press the 1/2 button within 5 seconds to activate the programming mode. Holding the 1/2 button for more than two seconds will erase all stored customer codes. The door locks will lock, then unlock, confirming the codes are erased. The existing codes do not need to be erased to program new codes.

3. Press and hold any button on the keyless entry remote transmitter. The doors will lock and unlock to confirm programming.

4. The DDM will automatically associate the transmitter to a personality setting. The first transmitter will be position 1 and the second transmitter will be position 2. The remaining transmitters, if programmed, will not be associated to a personality setting.

5. If additional transmitters are to be programmed, program each transmitter within 7.5 seconds of the last transmitter.

Official Licensed Product
Ford Motor Company

GENERAL PROCEDURES (Continued)

6. After all transmitters are programmed:
   - A new keyless entry keypad code can be programmed within 7.5 seconds of the last transmitter.
   - Press keyless entry keypad buttons 7/8 and 9/0 at the same time to exit program mode.
   - Wait for 7.5 seconds; the DDM will exit the program mode automatically.

SPECIFICATIONS

Torque Specifications

Description	Nm	Lb/In
Keyless Entry Keypad Nut	3-4	27-35

Official Licensed Product
Ford Motor Company

SECTION 501-16 Wipers and Washers

VEHICLE APPLICATION: Mark VIII

SUBJECT	PAGE
DESCRIPTION AND OPERATION	
Wiper and Washer System	501-16-2
DIAGNOSIS AND TESTING	
Wiper and Washer System	501-16-5
Inspection and Verification	501-16-5
Pinpoint Tests	501-16-7
Symptom Chart	501-16-5
REMOVAL AND INSTALLATION	
Control Module — Windshield Wiper	501-16-41
Motor — Windshield Wiper	501-16-38
Mounting Arm and Pivot Shaft — Assembly	501-16-35
Pivot Arm	501-16-33
Washer Pump and Reservoir	501-16-38
SPECIFICATIONS	501-16-42

Official Licensed Product
Ford Motor Company

DESCRIPTION AND OPERATION

Wiper and Washer System

The windshield wiper and washer system consists of:

Official Licensed Product
Ford Motor Company

DESCRIPTION AND OPERATION (Continued)

Windshield Wiper and Washer System

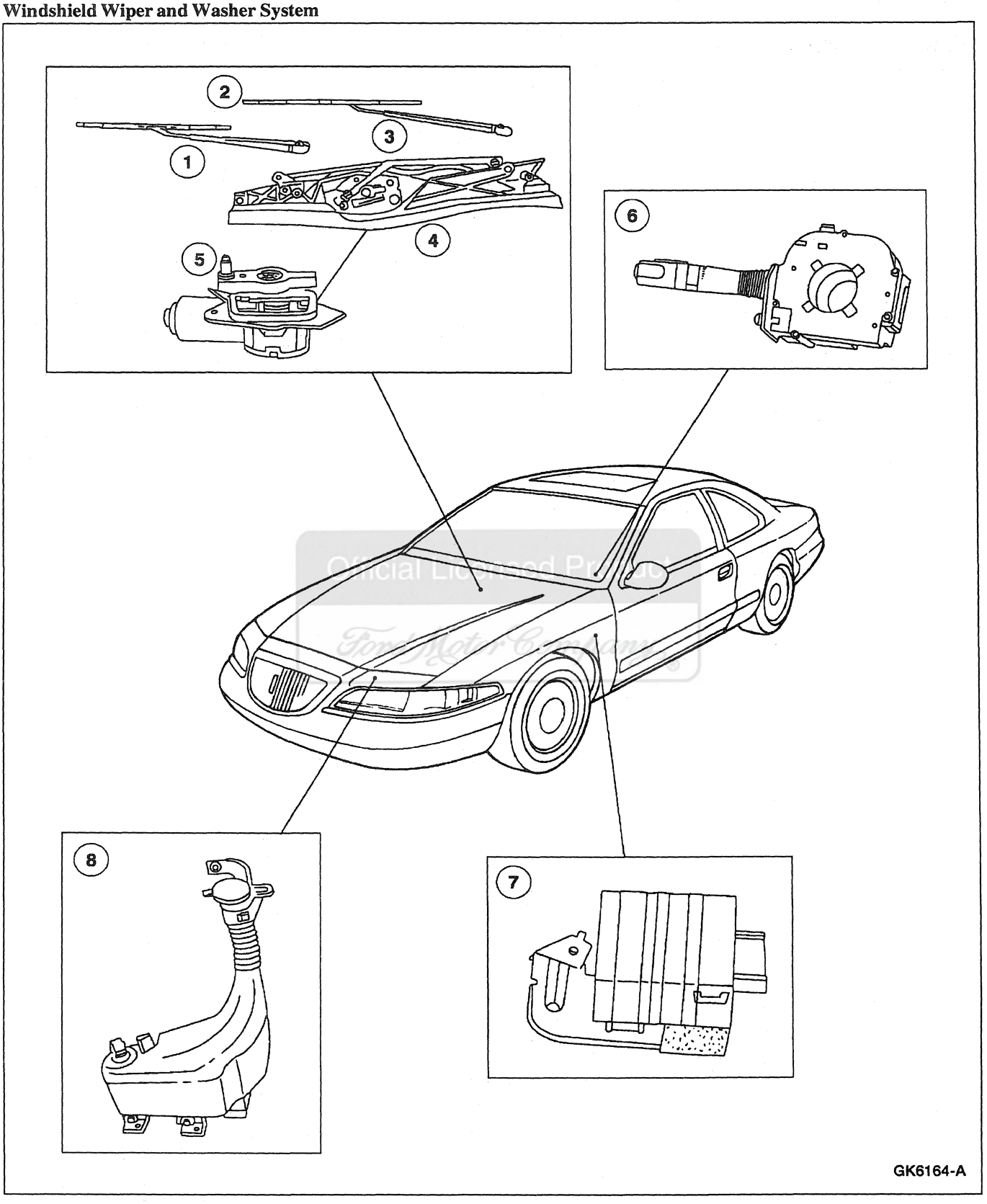

Official Licensed Product
Ford Motor Company

DESCRIPTION AND OPERATION (Continued)

Item	Part Number	Description
1	17526	Windshield Wiper Pivot Arm, RH
2	17528	Windshield Wiper Blade
3	17527	Windshield Wiper Pivot Arm, LH
4	—	Mounting Arm and Pivot Shaft
5	17508	Windshield Wiper Motor
6	13K359	Multi-Function Switch
7	17C476	Windshield Wiper Control Module
8	17618	Windshield Washer Reservoir

(Continued)

Wiper System

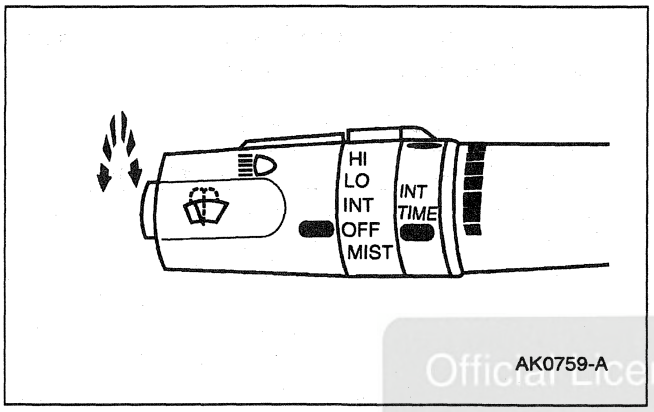

The windshield wiper system has four settings:

- Low Speed (LO)
- High Speed (HI)
- Intermittent (INT)
- Mist (MIST)

The delay is adjustable between one and twenty seconds.

Delay time is selected by turning the knob on the multi-function switch (13K359) and is timed out by the windshield wiper control module.

The windshield wiper motor (17508) runs at low speed during intermittent operation.

The windshield wiper motor will operate at low speed as long as the knob is held in MIST.

Upon release of MIST, the switch automatically returns to the OFF position.

Upon release of MIST, the wipers will complete the current cycle and then PARK.

The steering column/ignition/lighting (SCIL) module monitors the wiper operation. When LO or HI is selected, the SCIL module will turn on the low beam headlamps. This function can be disabled in the VEHICLE SETTINGS in the message center. Refer to Section 413-08.

Washer System

⚠ WARNING: WINDSHIELD WASHER SOLUTION CONTAINS METHANOL WHICH IS POISONOUS. OBSERVE ALL CAUTIONS AND WARNINGS INDICATED ON LABEL OF WASHER SOLUTION CONTAINER.

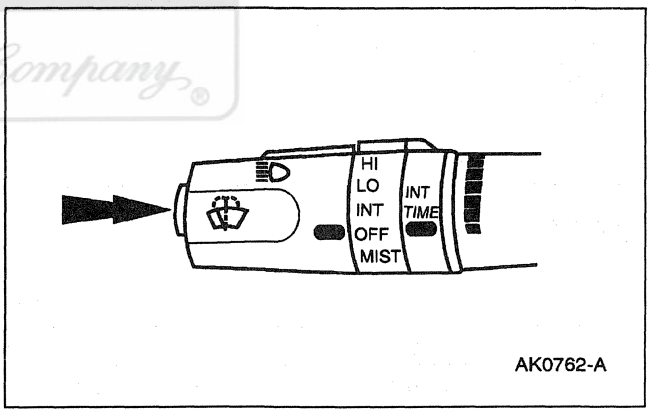

The windshield washer system operates as follows:

- By pressing the button on the wiper switch end of the multi-function switch.
- In the OFF or INT mode the wipers will run as long as the washer button is pressed.

Official Licensed Ford Motor Company

DESCRIPTION AND OPERATION (Continued)

- In the OFF or INT mode when the washer button is released, the wipers will complete two to three cycles and then return to their previous setting.
- In the LO and HI mode, the wipers will remain at the set speed when the washer button is pressed.
- The LOW WASHER FLUID message will appear in the message center if the washer fluid is low for ten seconds or more.

The fluid level sensor and windshield washer reservoir are replaced as an assembly.

DIAGNOSIS AND TESTING

Wiper and Washer System

Refer to Electrical and Vacuum Troubleshooting Manual, Cell 81, Interval Wiper/Washer for schematic and connector information.

Special Tool(s)

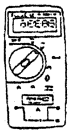 ST1137-A	73 Digital Multimeter or equivalent 105-R0051
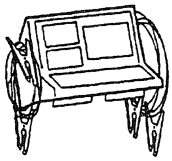 ST1179-A	Alternator, Regulator, Battery and Starter Tester (ARBST) or equivalent 010-00725

Inspection and Verification

1. Verify the customer concern by operating the windshield wiper and washer system to duplicate the condition.
2. Visually inspect for the following obvious signs of mechanical or electrical damage.

Visual Inspection Chart

Mechanical	Electrical
• Wiper blade • Binding wiper pivot arm • Binding wiper mounting arm and pivot shaft • Washer reservoir • Washer hoses • Multi-function switch	• Fuse 10 (30A) • Wiper motor • Washer pump • Corroded connectors • Thermal breaker internal to the wiper motor • Circuit

3. If the concern is not visually evident, determine the symptom and proceed to Symptom Chart.

Ford Motor Company

Symptom Chart

Symptom Chart

Condition	Possible Source	Action
• The Washer Pump Is Inoperative	• Circuitry. • Multi-function switch. • Interval washer/wiper module. • Washer pump motor.	• GO to Pinpoint Test A.
• The Low Washer Fluid Indicator Does Not Operate Properly	• Windshield washer pump. • Sensor. • Circuitry.	• REFER to Section 413-08.
• The Wipers are Inoperative	• Fuse. • Windshield wiper motor. • Multi-function switch. • Circuitry. • Interval wiper/washer module.	• GO to Pinpoint Test B.
• The Low Wiper Speed Does Not Operate Properly (High Speed OK)	• Multi-function switch. • Windshield wiper motor. • Circuitry. • Interval wiper/washer module.	• GO to Pinpoint Test C.

DIAGNOSIS AND TESTING (Continued)

Symptom Chart (Continued)

Condition	Possible Source	Action
• The High Wiper Speed Does Not Operate Properly (Low Speed OK)	• Multi-function switch. • Windshield wiper motor. • Circuitry. • Internal wiper/washer module.	• GO to Pinpoint Test D.
• The Intermittent Wiper Speed Does Not Operate Properly (High/Low Speeds OK)	• Multi-function switch. • Circuitry. • Interval wiper/washer module. • Windshield wiper motor.	• GO to Pinpoint Test E.
• The Wipers Will Not Park at the Proper Position	• Windshield wiper motor. • Interval wiper/washer module. • Circuitry.	• GO to Pinpoint Test F.
• The Wipers Stay On Continuously	• Multi-function switch. • Windshield wiper motor. • Interval wiper/washer module. • Circuitry.	• GO to Pinpoint Test G.
• The Wipers Do Not Operate Properly In the MIST Position	• Multi-function switch. • Interval wiper/washer module.	• GO to Pinpoint Test H.
• The Headlamps Do Not Illuminate When the Wipers Are On	• Circuitry. • Interval wiper/washer module. • Steering column/ignition/lighting (SCIL) module.	• GO to Pinpoint Test J.

Official Licensed Product
Ford Motor Company

DIAGNOSIS AND TESTING (Continued)

Pinpoint Tests

⚠ **CAUTION: Electronic modules are sensitive to electrical charges. If exposed to these charges, damages may result.**

PINPOINT TEST A: THE WASHER PUMP IS INOPERATIVE

TEST CONDITIONS	TEST DETAILS/RESULTS/ACTIONS
A1 CHECK THE WASHER PUMP OPERATION	
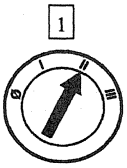 1 2 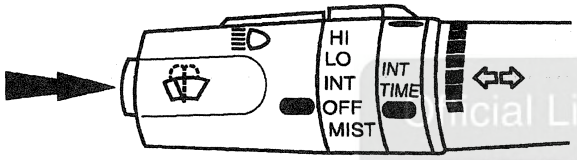 AK0687-A	2 Press the washer button. • Does the washer pump operate properly? → **Yes** GO to **A2.** → **No** GO to **A3.**
A2 CHECK FOR BLOCKAGE OR OBSTRUCTION	
 1	2 Inspect the washer nozzles, washer hoses and washer pump for blockages or obstructions. • Are any blockages or obstructions present? → **Yes** REPAIR or REPLACE as required. TEST the system for normal operation. → **No** REPLACE the washer pump motor; REFER to Washer Pump and Reservoir. TEST the system for normal operation.

(Continued)

Official Licensed Product
Ford Motor Company

DIAGNOSIS AND TESTING (Continued)

PINPOINT TEST A: THE WASHER PUMP IS INOPERATIVE (Continued)

TEST CONDITIONS	TEST DETAILS/RESULTS/ACTIONS
A3 CHECK THE WASHER PUMP MOTOR FOR VOLTAGE — CIRCUIT 941 (BK/W)	
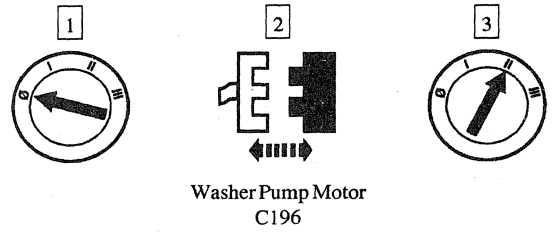 Washer Pump Motor C196 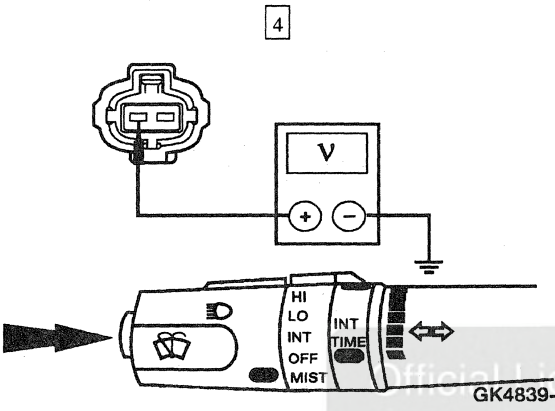	4 Measure the voltage between washer pump motor C196, circuit 941 (BK/W), and ground while pressing the washer button. • Is the voltage greater than 10 volts? → **Yes** GO to **A4**. → **No** GO to **A5**.
A4 CHECK THE WASHER PUMP MOTOR GROUND — CIRCUIT 57 (BK)	
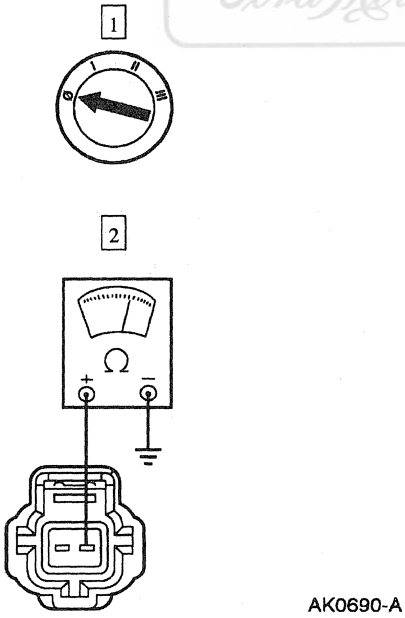	2 Measure the resistance between washer pump motor C196, circuit 57 (BK), and ground. • Is the resistance less than 5 ohms? → **Yes** REPLACE the washer pump motor; REFER to Washer Pump and Reservoir. TEST the system for normal operation. → **No** REPAIR circuit 57 (BK). TEST the system for normal operation.

Official Licensed Product
Ford Motor Company

(Continued)

DIAGNOSIS AND TESTING (Continued)

PINPOINT TEST A: THE WASHER PUMP IS INOPERATIVE (Continued)

TEST CONDITIONS	TEST DETAILS/RESULTS/ACTIONS
A5 CHECK CIRCUIT 941 (BK/W) FOR SHORT TO GROUND	
1 2 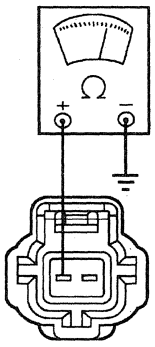 AK0691-A	2 Measure the resistance between washer pump motor C196, circuit 941 (BK/W), and ground. • Is the resistance greater than 10,000 ohms? → **Yes** REPLACE the multi-function switch; REFER to Section 211-05. TEST the system for normal operation. → **No** GO to **A6**.
A6 CHECK CIRCUIT 941 (BK/W) FOR OPEN	
1 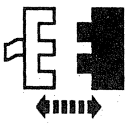 Interval Wiper/Washer Module C226 2 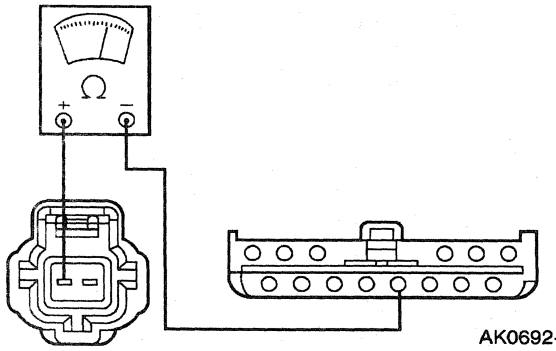 AK0692-B	2 Measure the resistance between the washer pump motor C196, circuit 941 (BK/W), and interval wiper/washer module C226-4, circuit 941 (BK/W). • Is the resistance less than 5 ohms? → **Yes** REPLACE the interval wiper/washer module; REFER to Control Module — Windshield Wiper. TEST the system for normal operation. → **No** REPAIR circuit 941 (BK/W). TEST the system for normal operation.

Unlicensed Product
Ford Motor Company

DIAGNOSIS AND TESTING (Continued)

PINPOINT TEST B: THE WIPERS ARE INOPERATIVE

TEST CONDITIONS	TEST DETAILS/RESULTS/ACTIONS
B1 CHECK FUSE JUNCTION PANEL FUSE 10 (30A)	
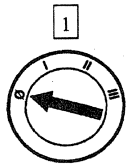 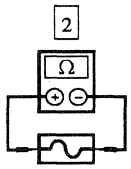 Fuse 10 (30A)	• Is fuse 10 (30A) OK? → **Yes** GO to **B2**. → **No** REPLACE fuse 10 (30A). TEST the system for normal operation. If the fuse fails again, CHECK for a short to ground. REPAIR as necessary.
B2 CHECK FOR VOLTAGE TO THE INTERVAL WIPER/WASHER MODULE — CIRCUIT 950 (W/BK)	
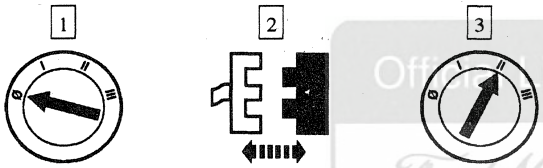 Interval Wiper/Washer Module C226 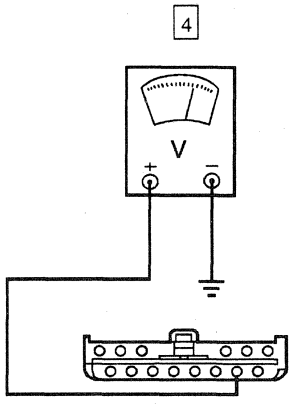 AK0694-B	4 Measure the voltage between interval wiper/washer module C226-2, circuit 950 (W/BK), and ground. • Is the voltage greater than 10 volts? → **Yes** GO to **B3**. → **No** REPAIR circuit 950 (W/BK). TEST the system for normal operation.

Official Licensed Product Ford Motor Company

(Continued)

DIAGNOSIS AND TESTING (Continued)

PINPOINT TEST B: THE WIPERS ARE INOPERATIVE (Continued)

TEST CONDITIONS	TEST DETAILS/RESULTS/ACTIONS
B3 CHECK THE GROUNDS TO THE INTERVAL WIPER/WASHER MODULE FOR OPEN — CIRCUIT 57 (BK)	
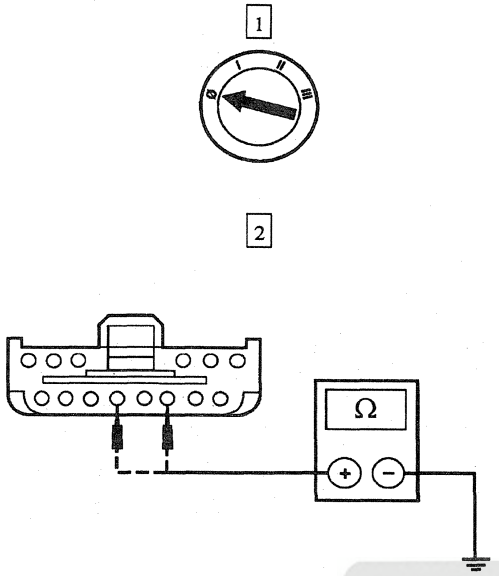	2 Measure the resistance between interval wiper/washer module C226-3, circuit 57 (BK), and ground; and between interval wiper/washer module C226-5, circuit 57 (BK), and ground. • Are the resistances less than 5 ohms? → **Yes** GO to **B4**. → **No** REPAIR circuit 57 (BK). TEST the system for normal operation.
B4 CHECK THE MULTI-FUNCTION SWITCH OUTPUT	
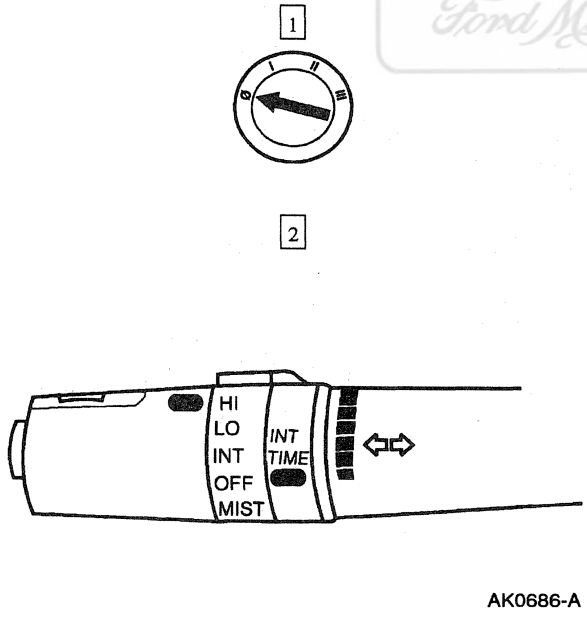	2 Turn the multi-function switch to the HI position.

Official Licensed Product
Ford Motor Company

(Continued)

DIAGNOSIS AND TESTING (Continued)

PINPOINT TEST B: THE WIPERS ARE INOPERATIVE (Continued)

TEST CONDITIONS	TEST DETAILS/RESULTS/ACTIONS
B4 CHECK THE MULTI-FUNCTION SWITCH OUTPUT (Continued)	
3 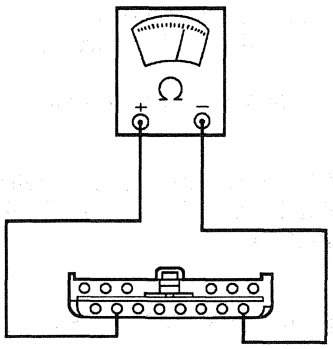 AK0697-B	3 Measure the resistance between interval wiper/washer module C226-7, circuit 993 (BR/W), and interval wiper/washer module C226-1, circuit 589 (O). • Is the resistance less than 5 ohms? → **Yes** GO to **B7**. → **No** GO to **B5**.
B5 CHECK CIRCUIT 993 (BR/W) FOR OPEN	
1 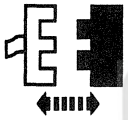 Multi-Function Switch C215 2 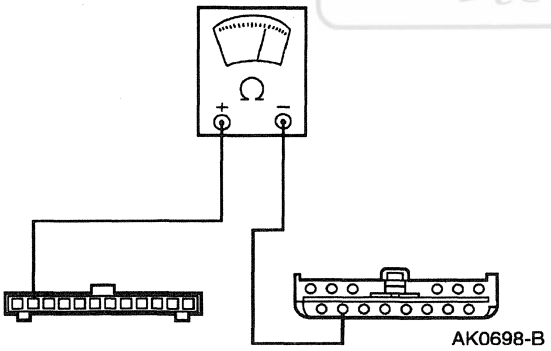 AK0698-B	2 Measure the resistance between multi-function switch C215-2, circuit 993 (BR/W), and interval wiper/washer module C226-7, circuit 993 (BR/W). • Is the resistance less than 5 ohms? → **Yes** GO to **B6**. → **No** REPAIR circuit 993 (BR/W). TEST the system for normal operation.

Official Licensed Product
Ford Motor Co.

(Continued)

DIAGNOSIS AND TESTING (Continued)

PINPOINT TEST B: THE WIPERS ARE INOPERATIVE (Continued)

TEST CONDITIONS	TEST DETAILS/RESULTS/ACTIONS
B6 CHECK CIRCUIT 589 (O) FOR OPEN	
1 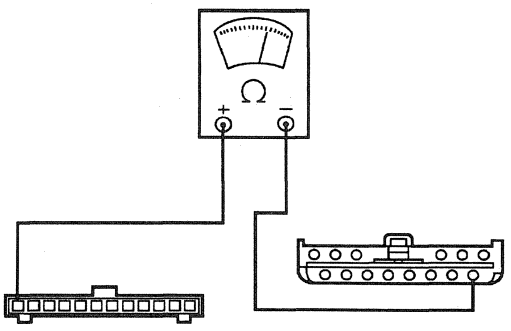 AK0699-B	1 Measure the resistance between multi-function switch C215-1, circuit 589 (O), and interval wiper/washer module C226-1, circuit 589 (O). • Is the resistance less than 5 ohms? → **Yes** REPLACE the multi-function switch; REFER to Section 211-05. TEST the system for normal operation. → **No** REPAIR circuit 589 (O). TEST the system for normal operation.
B7 CHECK THE INTERVAL WIPER/WASHER MODULE OUTPUT FOR VOLTAGE	
1 Interval Wiper/Washer Module C226 2 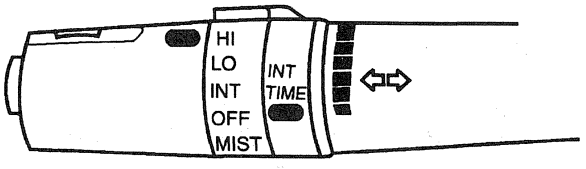 AK0686-A 3 	2 Turn the multi-function switch to the HI position.

Official Licensed Product
Ford Motor Company

(Continued)

DIAGNOSIS AND TESTING (Continued)

PINPOINT TEST B: THE WIPERS ARE INOPERATIVE (Continued)

TEST CONDITIONS	TEST DETAILS/RESULTS/ACTIONS
B7 CHECK THE INTERVAL WIPER/WASHER MODULE OUTPUT FOR VOLTAGE (Continued)	
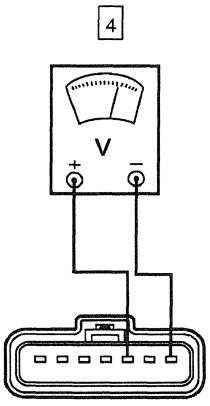 AK0700-B	4 Measure the voltage between windshield wiper motor C197-5, circuit 61 (Y/R), and windshield wiper motor C197-7, circuit 58 (W). • Is the voltage greater than 10 volts? → **Yes** REPLACE the windshield wiper motor; REFER to Mounting Arm and Pivot Shaft — Assembly. TEST the system for normal operation. → **No** GO to **B8**.
B8 CHECK CIRCUIT 61 (Y/R) FOR OPEN	
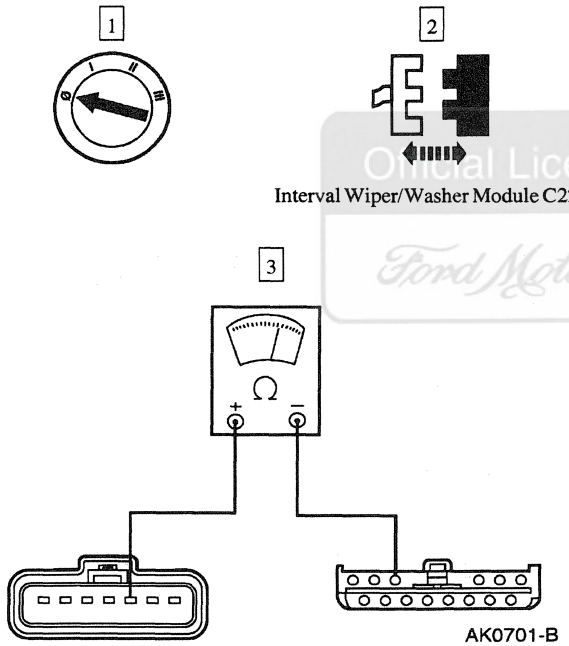 AK0701-B	3 Measure the resistance between interval wiper/washer module C226-12, circuit 61 (Y/R), and windshield wiper motor C197-5, circuit 61 (Y/R). • Is the resistance less than 5 ohms? → **Yes** REPLACE the interval wiper/washer module; REFER to Control Module — Windshield Wiper. TEST the system for normal operation. → **No** REPAIR circuit 61 (Y/R). TEST the system for normal operation.

Official Licensed Product
Ford Motor Co.

DIAGNOSIS AND TESTING (Continued)

PINPOINT TEST C: THE LOW WIPER SPEED DOES NOT OPERATE PROPERLY (HIGH SPEED OK)

TEST CONDITIONS	TEST DETAILS/RESULTS/ACTIONS
C1 CHECK THE MULTI-FUNCTION SWITCH INPUT	
1 2 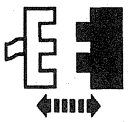 Interval Wiper/Washer Module C226	
3 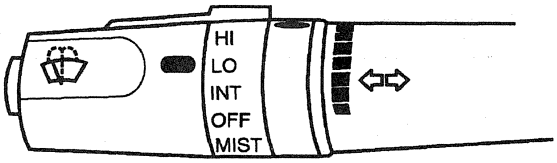 AK0684-A	3 Turn the multi-function switch to the LO position.
4 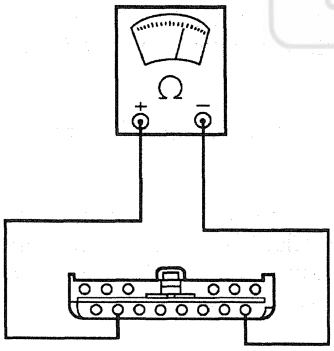 AK0697-B	4 Measure the resistance between interval wiper/washer module C226-1, circuit 589 (O), and interval wiper/washer module C226-7, circuit 993 (BR/W). • Is the resistance between 3500 and 4500 ohms? → **Yes** GO to **C2**. → **No** REPLACE the multi-function switch; REFER to Section 211-05. TEST the system for normal operation.

Official Licensed Product
Ford Motor Company

(Continued)

DIAGNOSIS AND TESTING (Continued)

PINPOINT TEST C: THE LOW WIPER SPEED DOES NOT OPERATE PROPERLY (HIGH SPEED OK) (Continued)

TEST CONDITIONS	TEST DETAILS/RESULTS/ACTIONS
C2 CHECK THE WIPER MOTOR OPERATION	
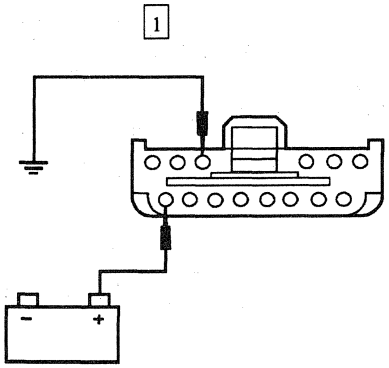 GK6336-A	1 Connect a jumper wire between interval wiper/washer module C226-8, circuit 56 (DB/O), and the positive battery terminal; and between interval wiper/washer module C226-12, circuit 61 (Y/R), and ground. • Do the wipers operate? → **Yes** REPLACE the interval wiper/washer module; REFER to Control Module — Windshield Wiper. TEST the system for normal operation. → **No** GO to **C3**.
C3 CHECK CIRCUIT 56 (DB/O) FOR SHORT TO GROUND	
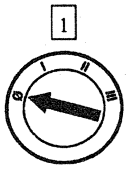 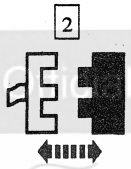 Windshield Wiper Motor C197 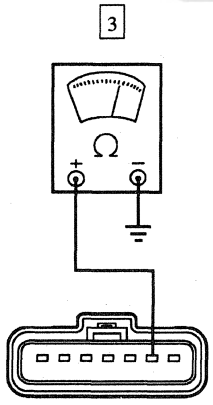 AK0703-B	3 Measure the resistance between windshield wiper motor C197-6, circuit 56 (DB/O), and ground. • Is the resistance greater than 10,000 ohms? → **Yes** GO to **C4**. → **No** REPAIR circuit 56 (DB/O). TEST the system for normal operation.

(Continued)

Digital Licensed Product Ford Motor Company

DIAGNOSIS AND TESTING (Continued)

PINPOINT TEST C: THE LOW WIPER SPEED DOES NOT OPERATE PROPERLY (HIGH SPEED OK) (Continued)

TEST CONDITIONS	TEST DETAILS/RESULTS/ACTIONS
C4 CHECK CIRCUIT 56 (DB/O) FOR OPEN	
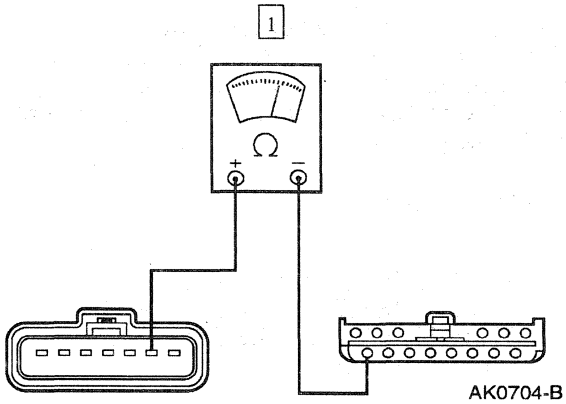	1 Measure the resistance between interval wiper/washer module C226-8, circuit 56 (DB/O), and windshield wiper motor C197-6, circuit 56 (DB/O). • Is the resistance less than 5 ohms? → **Yes** REPLACE the windshield wiper motor; REFER to Mounting Arm and Pivot Shaft — Assembly. TEST the system for normal operation. → **No** REPAIR circuit 56 (DB/O). TEST the system for normal operation.

PINPOINT TEST D: THE HIGH SPEED DOES NOT OPERATE PROPERLY (LOW SPEED OK)

TEST CONDITIONS	TEST DETAILS/RESULTS/ACTIONS
D1 CHECK THE MULTI-FUNCTION SWITCH INPUT	
 Interval Wiper/Washer Module C226 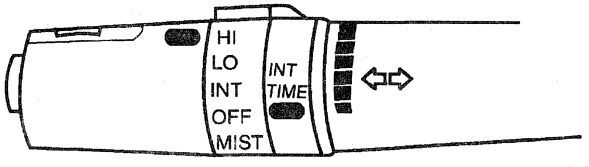 AK0686-A	3 Turn the multi-function switch to the HI position.

Official Licensed Product Ford Motor Company

(Continued)

DIAGNOSIS AND TESTING (Continued)

PINPOINT TEST D: THE HIGH SPEED DOES NOT OPERATE PROPERLY (LOW SPEED OK) (Continued)

TEST CONDITIONS	TEST DETAILS/RESULTS/ACTIONS
D1 CHECK THE MULTI-FUNCTION SWITCH INPUT (Continued)	
4 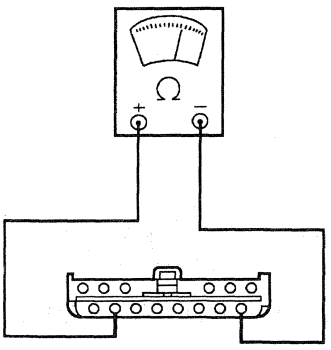 AK0697-B	4 Measure the resistance between interval wiper/washer module C226-1, circuit 589 (O), and interval wiper/washer module C226-7, circuit 993 (BR/W). • Is the resistance less than 5 ohms? → **Yes** GO to **D2**. → **No** REPLACE the multi-function switch; REFER to Section 211-05. TEST the system for normal operation.
D2 CHECK THE WIPER MOTOR OPERATION	
1 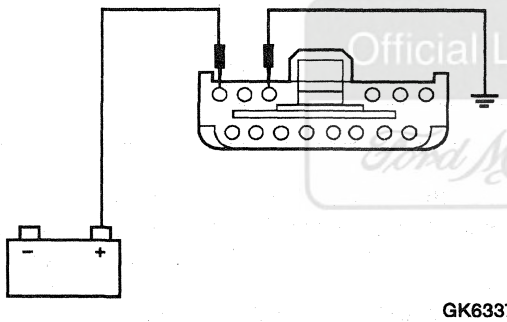 GK6337-A 2 	1 Connect a jumper wire between interval wiper/washer module C226-14, circuit 58 (W) and the positive battery terminal; and between interval wiper/washer module C226-12, circuit 61 (Y/R), and ground. • Do the wipers operate? → **Yes** REPLACE the interval wiper/washer module; REFER to Control Module — Windshield Wiper. TEST the system for normal operation. → **No** GO to **D3**.

(Continued)

Official Licensed Product Ford Motor Company

DIAGNOSIS AND TESTING (Continued)

PINPOINT TEST D: THE HIGH SPEED DOES NOT OPERATE PROPERLY (LOW SPEED OK) (Continued)

TEST CONDITIONS	TEST DETAILS/RESULTS/ACTIONS
D3 CHECK CIRCUIT 58 (W) FOR SHORT TO GROUND	
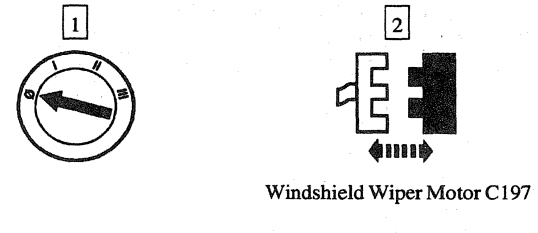 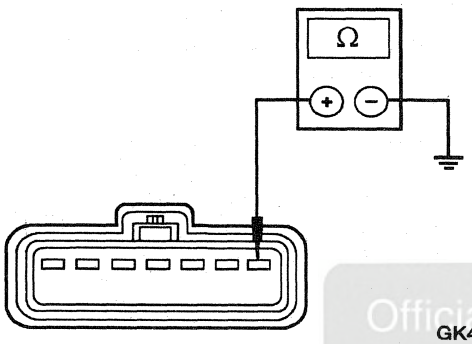	3 Measure the resistance between windshield wiper motor C197-7, circuit 58 (W), and ground. • Is the resistance greater than 10,000 ohms? → **Yes** GO to **D4**. → **No** REPAIR circuit 58 (W). TEST the system for normal operation.
D4 CHECK CIRCUIT 58 (W) FOR OPEN	
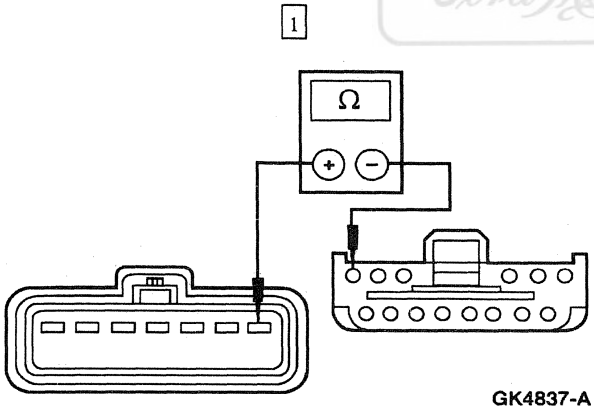	1 Measure the resistance between interval wiper/washer module C226-14, circuit 58 (W), and windshield wiper motor C197-7, circuit 58 (W). • Is the resistance less than 5 ohms? → **Yes** REPLACE the windshield wiper motor; REFER to Mounting Arm and Pivot Shaft — Assembly. TEST the system for normal operation. → **No** REPAIR circuit 58 (W). TEST the system for normal operation.

Official Licensed Product
Ford Motor Company

DIAGNOSIS AND TESTING (Continued)

PINPOINT TEST E: THE INTERMITTENT WIPER SPEED DOES NOT OPERATE PROPERLY (HIGH/LOW SPEEDS OK)

TEST CONDITIONS	TEST DETAILS/RESULTS/ACTIONS
E1 CHECK THE MULTI-FUNCTION SWITCH INTERVAL INPUT TO THE INTERVAL WIPER/WASHER MODULE — CIRCUIT 590 (DB/W)	
1 2 Interval Wiper/Washer Module C226	
3 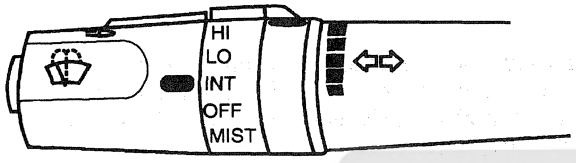 AK0688-A	3 Turn the multi-function switch to the INT position.
4 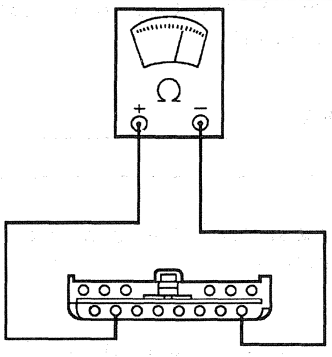 AK0697-B	4 Measure the resistance between interval wiper/washer module C226-7, circuit 993 (BR/W), interval wiper/washer module C226-1, circuit 589 (O). • Is the resistance between 10,500 and 12,000 ohms? → **Yes** GO to **E2**. → **No** REPLACE the multi-function switch. REFER to Section 211-05. TEST the system for normal operation.

Official Licensed Product
Ford Motor Company

(Continued)

DIAGNOSIS AND TESTING (Continued)

PINPOINT TEST E: THE INTERMITTENT WIPER SPEED DOES NOT OPERATE PROPERLY (HIGH/LOW SPEEDS OK) (Continued)

TEST CONDITIONS	TEST DETAILS/RESULTS/ACTIONS
E2 CHECK THE INTERVAL SETTING INPUT	
1 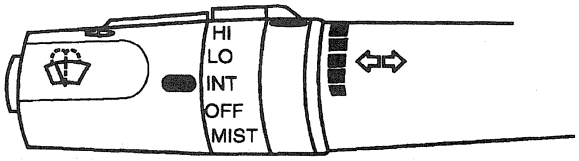 AK0688-A	1 Turn the multi-function switch to any interval setting.
2 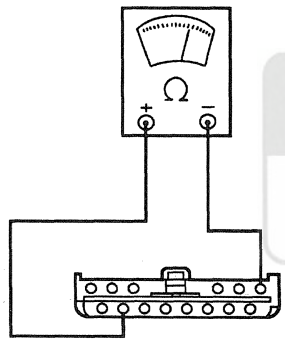 AK0693-B	2 Measure the resistance between interval wiper/washer module C226-7, circuit 993 (BR/W), and interval wiper/washer module C226-9, circuit 590 (DB/W). • Is the resistance reading between 3300 and 100,000 ohms? → **Yes** REPLACE the interval wiper/washer module; REFER to Control Module — Windshield Wiper. TEST the system for normal operation. → **No** GO to **E3**.
E3 CHECK CIRCUIT 590 (DB/W) FOR SHORT TO GROUND	
1 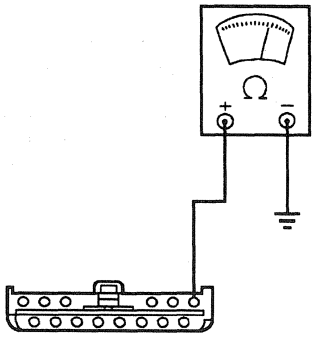 AK0705-B	1 Measure the resistance between interval wiper/washer module C226-9, circuit 590 (DB/W), and ground. • Is the resistance greater than 10,000 ohms? → **Yes** GO to **E5**. → **No** GO to **E4**.

(Continued)

Official Licensed Product Ford Motor Company

DIAGNOSIS AND TESTING (Continued)

PINPOINT TEST E: THE INTERMITTENT WIPER SPEED DOES NOT OPERATE PROPERLY (HIGH/LOW SPEEDS OK) (Continued)

TEST CONDITIONS	TEST DETAILS/RESULTS/ACTIONS
E4 CHECK THE MULTI-FUNCTION SWITCH FOR SHORT TO GROUND — CIRCUIT 590 (DB/W)	
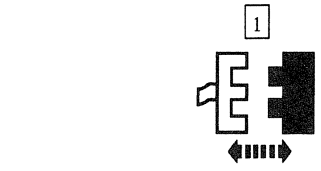 Multi-function Switch C215 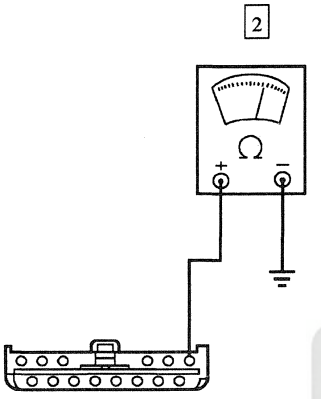 AK0705-B	2 Measure the resistance between interval wiper/washer module C226-9, circuit 590 (DB/W), and ground. • Is the resistance greater than 10,000 ohms? → **Yes** REPLACE the multi-function switch; REFER to Section 211-05. TEST the system for normal operation. → **No** REPAIR circuit 590 (DB/W). TEST the system for normal operation.
E5 CHECK CIRCUIT 590 (DB/W) FOR OPEN	
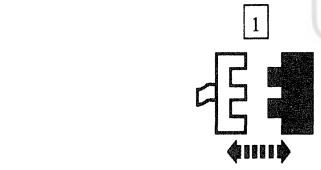 Multi-function Switch C215 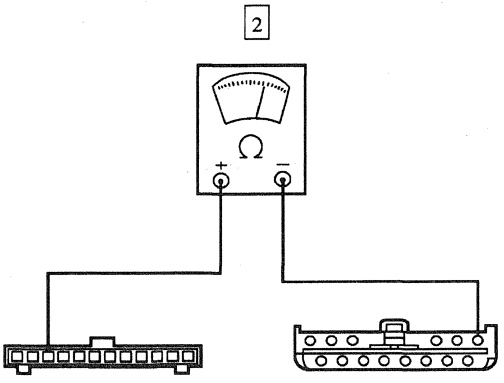 AK0706-B	2 Measure the resistance between interval wiper/washer module C226-9, circuit 590 (DB/W), and multi-function switch C215-3, circuit 590 (DB/W). • Is the resistance less than 5 ohms? → **Yes** REPLACE the multi-function switch; REFER to Section 211-05. TEST the system for normal operation. → **No** REPAIR circuit 590 (DB/W). TEST the system for normal operation.

Official Licensed Publication
Ford Motor Company

DIAGNOSIS AND TESTING (Continued)

PINPOINT TEST F: THE WIPERS WILL NOT PARK AT THE PROPER POSITION

TEST CONDITIONS	TEST DETAILS/RESULTS/ACTIONS
F1 CHECK WINDSHIELD WIPER MOTOR SUPPLY AND GROUND	
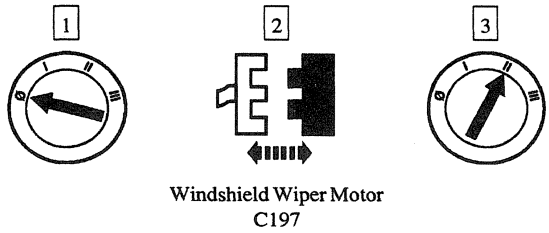 Windshield Wiper Motor C197 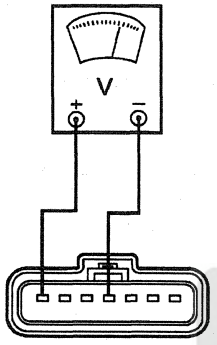 AK0707-B	4 Measure the voltage between windshield wiper motor C197-1, circuit 950 (W/BK), and windshield wiper motor C197-4, circuit 57 (BK). • Is the voltage greater than 10 volts? → **Yes** GO to **F3**. → **No** GO to **F2**.
F2 CHECK CIRCUIT 57 (BK) FOR OPEN	
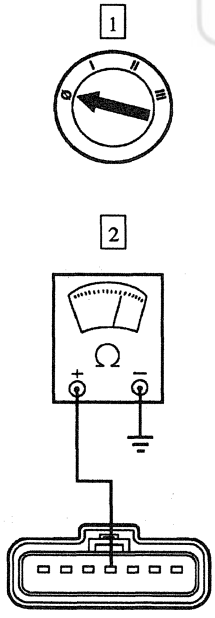 AK0708-B	2 Measure the resistance between windshield wiper motor C197-4, circuit 57 (BK), and ground. • Is the resistance less than 5 ohms? → **Yes** REPAIR circuit 950 (W/BK). TEST the system for normal operation. → **No** REPAIR circuit 57 (BK). TEST the system for normal operation.

Official Licensed Product Ford Motor Company

(Continued)

DIAGNOSIS AND TESTING (Continued)

PINPOINT TEST F: THE WIPERS WILL NOT PARK AT THE PROPER POSITION (Continued)

TEST CONDITIONS	TEST DETAILS/RESULTS/ACTIONS
F3 CHECK CIRCUIT 63 (R) FOR OPEN	
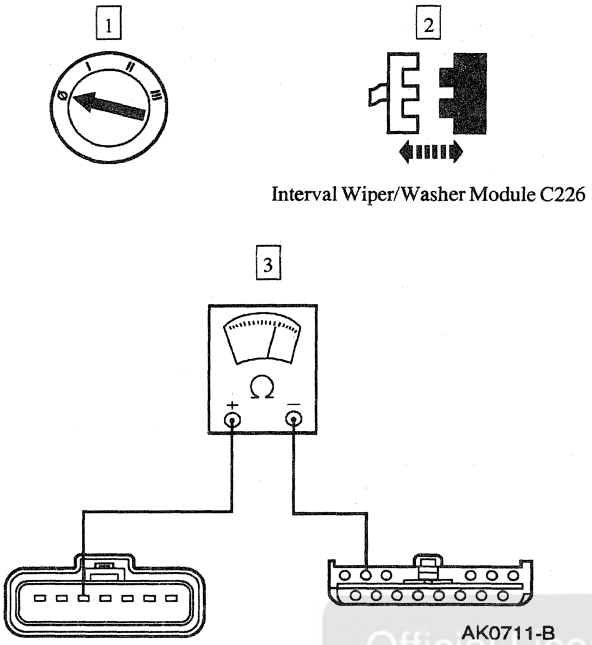	3 Measure the resistance between interval wiper/washer module C226-13, circuit 63 (R), and windshield wiper motor C197-3, circuit 63 (R). • Is the resistance less than 5 ohms? → **Yes** GO to **F4**. → **No** REPAIR circuit 63 (R). TEST the system for normal operation.
F4 CHECK CIRCUIT 63 (R) FOR SHORT TO GROUND	
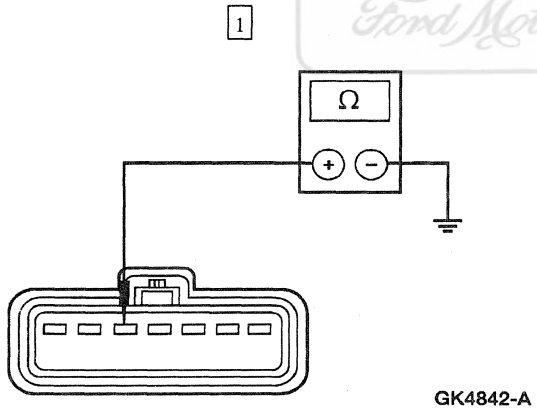	1 Measure the resistance between windshield wiper motor C197-3, circuit 63 (R), and ground. • Is the resistance greater than 10,000 ohms? → **Yes** GO to **F5**. → **No** REPAIR circuit 63 (R). TEST the system for normal operation.

Official Licensed Product
Ford Motor Company

(Continued)

DIAGNOSIS AND TESTING (Continued)

PINPOINT TEST F: THE WIPERS WILL NOT PARK AT THE PROPER POSITION (Continued)

TEST CONDITIONS	TEST DETAILS/RESULTS/ACTIONS
F5 CHECK CIRCUIT 28 (BK/PK) FOR OPEN	
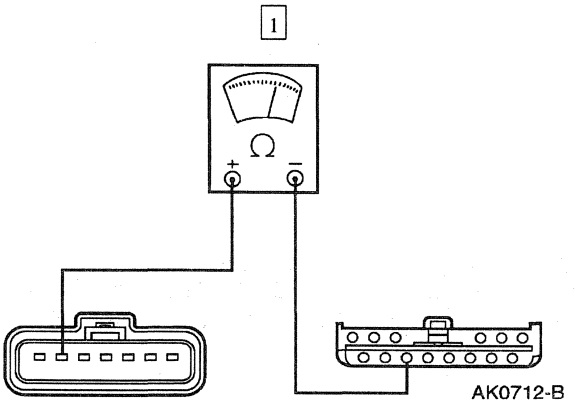	1 Measure the resistance between interval wiper/washer module C226-6, circuit 28 (BK/PK), and windshield wiper motor C197-2, circuit 28 (BK/PK). • Is the resistance less than 5 ohms? → **Yes** GO to **F6**. → **No** REPAIR circuit 28 (BK/PK). TEST the system for normal operation.
F6 CHECK CIRCUIT 28 (BK/PK) FOR SHORT TO GROUND	
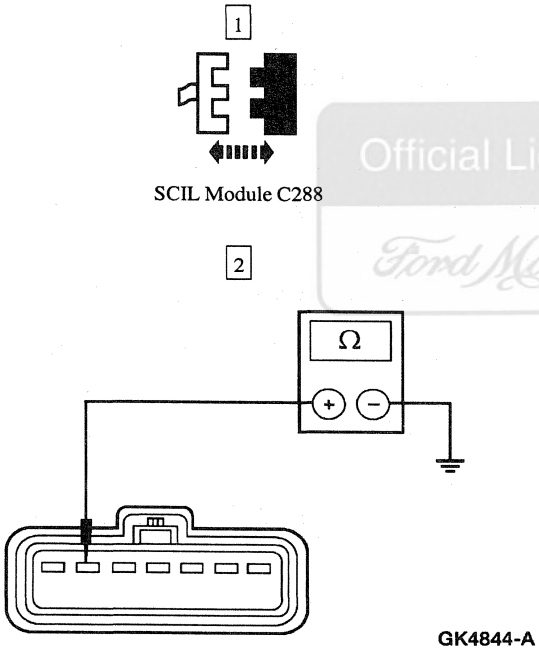	2 Measure the resistance between windshield wiper motor C197-2, circuit 28 (BK/PK), and ground. • Is the resistance greater than 10,000 ohms? → **Yes** GO to **F7**. → **No** REPAIR circuit 28 (BK/PK). TEST the system for normal operation.

Official Licensed Product
Ford Motor Company

(Continued)

DIAGNOSIS AND TESTING (Continued)

PINPOINT TEST F: THE WIPERS WILL NOT PARK AT THE PROPER POSITION (Continued)

TEST CONDITIONS	TEST DETAILS/RESULTS/ACTIONS
F7 CHECK THE INTERVAL WIPER/WASHER MODULE OUTPUT	
1 2 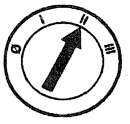 Interval Wiper/Washer Module C226	
3 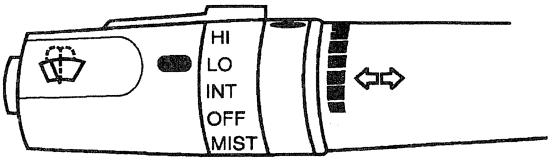 AK0684-A	3 Turn the multi-function switch to the LO position.
4 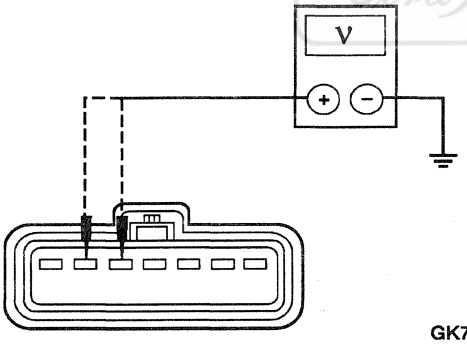 GK7061-A	4 Measure the voltage between windshield wiper motor C197-2, circuit 28 (BK/PK), and ground; and between windshield wiper motor C197-3, circuit 63 (R), and ground. • Do the voltages vary between 0 and 10 volts? → **Yes** REPLACE the windshield wiper motor; REFER to Mounting Arm and Pivot Shaft — Assembly. TEST the system for normal operation. → **No** REPLACE the interval wiper/washer module; REFER to Control Module — Windshield Wiper. TEST the system for normal operation.

Official Licensed Product
Ford Motor Company

DIAGNOSIS AND TESTING (Continued)

PINPOINT TEST G: THE WIPERS STAY ON CONTINUOUSLY

TEST CONDITIONS	TEST DETAILS/RESULTS/ACTIONS
G1 CHECK THE MULTI-FUNCTION SWITCH FOR SHORT TO GROUND	
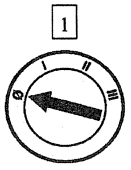 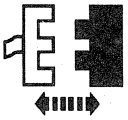 Interval Wiper/Washer Module C226	
3	3 Turn the multi-function switch to the HI position.
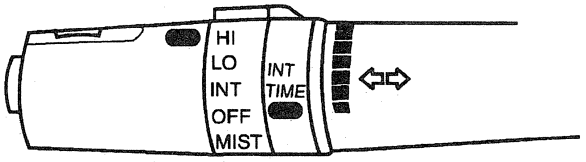 AK0686-A	
4	4 Measure the resistance between interval wiper/washer module C226-7, circuit 993 (BR/W), and ground. • Is the resistance greater than 10,000 ohms? → **Yes** GO to **G2**. → **No** REPLACE the multi-function switch; REFER to Section 211-05. TEST the system for normal operation.
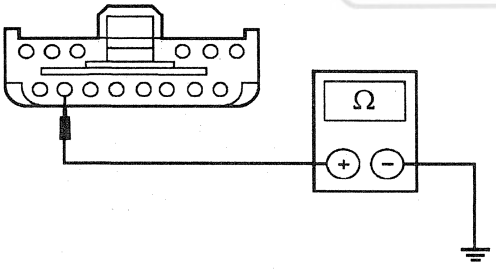 GK4840-A	

Official Licensed Product
Ford Motor Company®

(Continued)

DIAGNOSIS AND TESTING (Continued)

PINPOINT TEST G: THE WIPERS STAY ON CONTINUOUSLY (Continued)

TEST CONDITIONS	TEST DETAILS/RESULTS/ACTIONS
G2 CHECK CIRCUIT 589 (O) FOR SHORT TO GROUND	
1 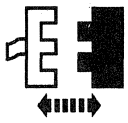 Multi-Function Switch C215 2 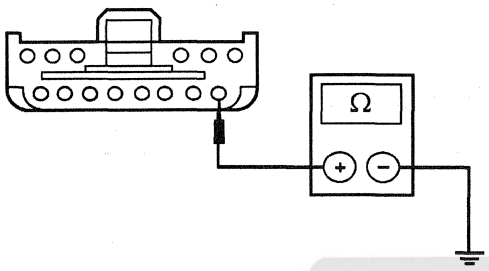 GK4838-A	2 Measure the resistance between interval wiper/washer module C226-1, circuit 589 (O), and ground. • Is the resistance greater than 10,000 ohms? → **Yes** GO to **G3**. → **No** REPAIR circuit 589 (O). TEST the system for normal operation.
G3 CHECK CIRCUIT 993 (BR/W) FOR SHORT TO GROUND	
1 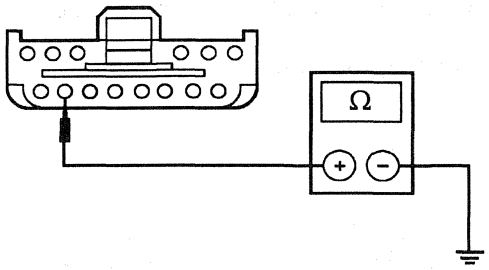 GK4840-A	1 Measure the resistance between interval wiper/washer module C226-7, circuit 993 (BR/W), and ground. • Is the resistance greater than 10,000 ohms? → **Yes** GO to **G4**. → **No** REPAIR circuit 993 (BR/W). TEST the system for normal operation.

Official Licensed Product
Ford Motor Company

(Continued)

DIAGNOSIS AND TESTING (Continued)

PINPOINT TEST G: THE WIPERS STAY ON CONTINUOUSLY (Continued)

TEST CONDITIONS	TEST DETAILS/RESULTS/ACTIONS
G4 CHECK CIRCUIT 590 (DB/W) FOR SHORT TO GROUND	
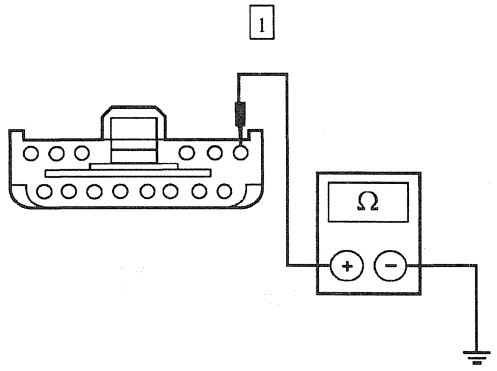 GK6339-A	1 Measure the resistance between interval wiper/washer C226-9, circuit 590 (DB/W), and ground. • Is the resistance greater than 10,000 ohms? → **Yes** GO to **G5**. → **No** REPAIR circuit 590 (DB/W). TEST the system for normal operation.
G5 CHECK CIRCUITS 56 (DB/O) AND 58 (W) FOR SHORT TO POWER — WIPER MOTOR CONNECTED	
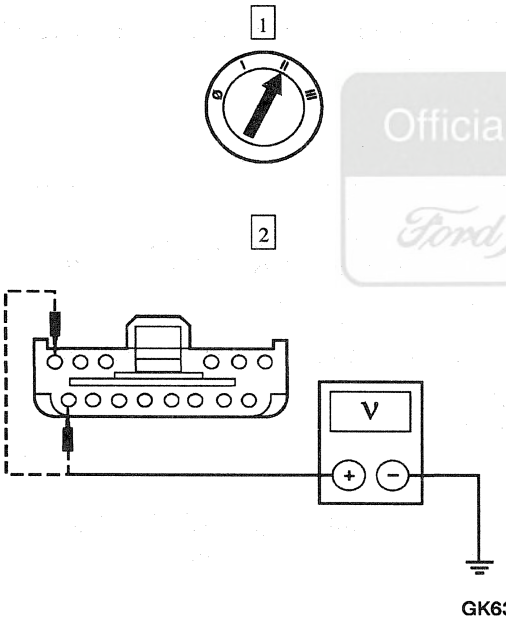 GK6340-A	2 Measure the voltage between interval wiper/washer module C226-8, circuit 56 (DB/O), and ground; and between interval wiper/washer module C226-14, circuit 58 (W), and ground. • Is any voltage indicated? → **Yes** GO to **G6**. → **No** REPLACE the interval wiper/washer module; REFER to Control Module — Windshield Wiper. TEST the system for normal operation.

Official Licensed Product
Ford Motor Company

(Continued)

DIAGNOSIS AND TESTING (Continued)

PINPOINT TEST G: THE WIPERS STAY ON CONTINUOUSLY (Continued)

TEST CONDITIONS	TEST DETAILS/RESULTS/ACTIONS
G6 CHECK CIRCUITS 56 (DB/O) AND 58 (W) FOR SHORT TO POWER — WIPER MOTOR DISCONNECTED	
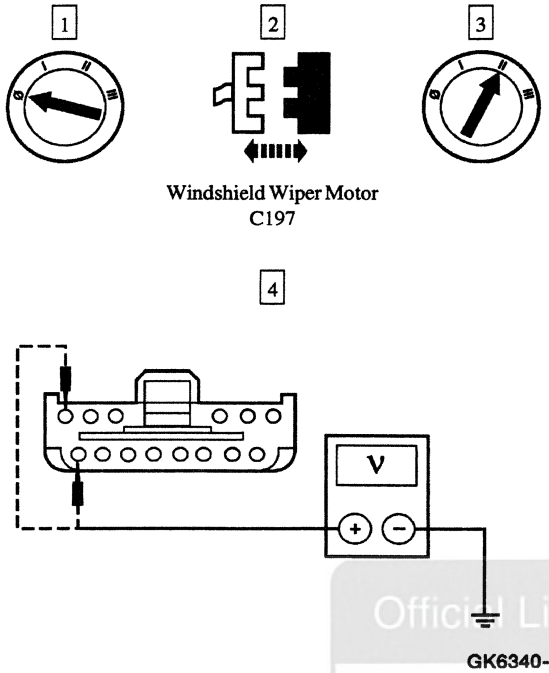	4 Measure the voltage between interval wiper/washer module C226-8, circuit 56 (DB/O), and ground; and between interval wiper/washer module C226-14, circuit 58 (W), and ground. • Is any voltage indicated? → **Yes** REPAIR circuit 56 (DB/O) and/or 58 (W). TEST the system for normal operation. → **No** REPLACE the windshield wiper motor; REFER to Mounting Arm and Pivot Shaft — Assembly. TEST the system for normal operation.

Official Licensed Product
Ford Motor Company

DIAGNOSIS AND TESTING (Continued)

PINPOINT TEST H: THE WIPERS DO NOT OPERATE PROPERLY IN THE MIST POSITION

TEST CONDITIONS	TEST DETAILS/RESULTS/ACTIONS
H1 CHECK THE WINDSHIELD WIPER OPERATION IN THE LO SPEED POSITION	
1 2 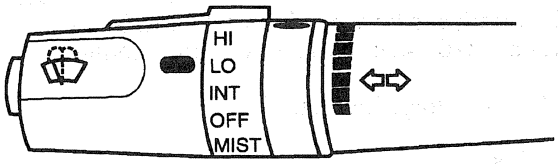 AK0684-A	2 Turn the multi-function switch to the LO speed position. • Do the windshield wipers operate? → **Yes** GO to **H2**. → **No** GO to Pinpoint Test D.
H2 CHECK THE INPUT TO THE WINDSHIELD WIPER CONTROL MODULE IN THE MIST POSITION	
1 2 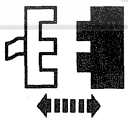 Interval Wiper/Washer Module C226 3 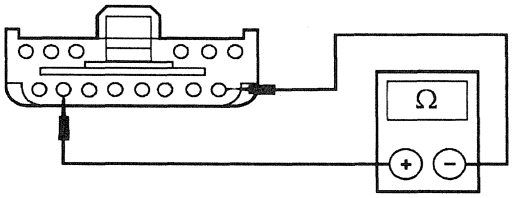 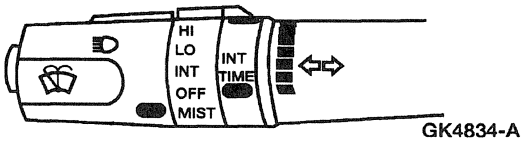 GK4834-A	3 Measure the resistance between interval wiper/washer module C226-1, circuit 589 (O), and interval wiper/washer module C226-7, circuit 993 (BR/W), while holding the multi-function switch in the MIST position. • Is the resistance between 3500 and 4500 ohms? → **Yes** REPLACE the interval wiper/washer module; REFER to Control Module — Windshield Wiper. TEST the system for normal operation. → **No** REPLACE the multi-function switch; REFER to Section 211-05. TEST the system for normal operation.

Ford Motor Company

DIAGNOSIS AND TESTING (Continued)

PINPOINT TEST J: THE HEADLAMPS DO NOT ILLUMINATE WHEN THE WIPERS ARE ON

TEST CONDITIONS	TEST DETAILS/RESULTS/ACTIONS
J1 CHECK THE HEADLAMP OPERATION	
	1 Turn the headlamp switch to the on position. • Do the headlamps illuminate? → **Yes** GO to **J2**. → **No** REFER to Section 417-01.
J2 CHECK THE WINDSHIELD WIPER MOTOR POSITION INPUT TO THE STEERING COLUMN/IGNITION/LIGHTING (SCIL) MODULE — CIRCUIT 28 (BK/PK)	
1 2 SCIL Module C288 3 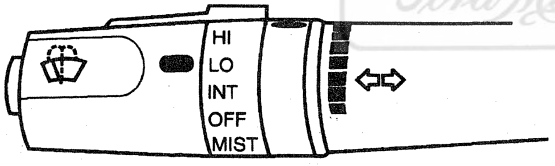 AK0684-A 4	3 Turn the multi-function switch to the LO position.

(Continued)

Official Licensed Product Ford Motor Company

DIAGNOSIS AND TESTING (Continued)

PINPOINT TEST J: THE HEADLAMPS DO NOT ILLUMINATE WHEN THE WIPERS ARE ON (Continued)

TEST CONDITIONS	TEST DETAILS/RESULTS/ACTIONS
J2 CHECK THE WINDSHIELD WIPER MOTOR POSITION INPUT TO THE STEERING COLUMN/IGNITION/LIGHTING (SCIL) MODULE — CIRCUIT 28 (BK/PK) (Continued)	
[5] 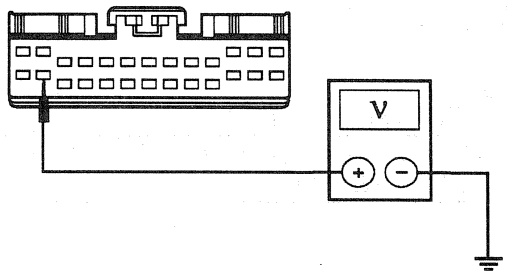 GK7062-A	[5] **NOTE:** Wait a minimum of 15 seconds before performing this step. Measure the voltage between SCIL module C288-15, circuit 28 (BK/PK), and ground. • Does the voltage vary between 0 and 10 volts? → **Yes** REPLACE the SCIL module; REFER to Section 419-10. TEST the system for normal operation. → **No** REPAIR circuit 28 (BK/PK). TEST the system for normal operation.

REMOVAL AND INSTALLATION

Official Licensed Product
Ford Motor Company

Pivot Arm

Removal

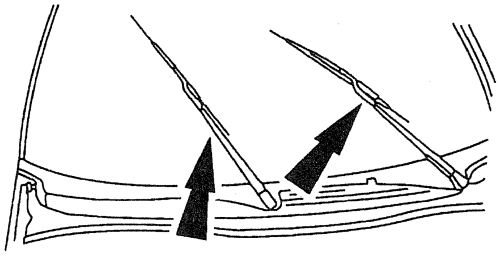
AK0779-B

1. Position the windshield wiper pivot arms to the highest position and turn the ignition switch to OFF.

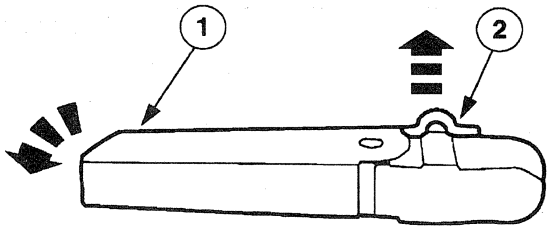

GK6155-A

2. Release the pivot arm locking lever.
   1 Carefully raise the windshield wiper blade away from the windshield until it stops.
   2 Pull the locking lever away from the windshield wiper pivot arm.

REMOVAL AND INSTALLATION (Continued)

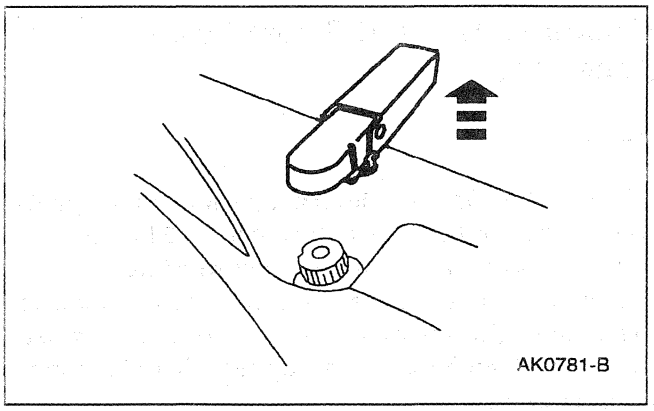

3. ⚠ **CAUTION: To prevent glass or paint damage, do not pry the windshield wiper pivot arm (17526) from the windshield wiper mounting arm and pivot shaft with metal or a sharp tool.**

   Lift the windshield wiper pivot arm from the windshield wiper mounting arm and pivot shaft.

Installation

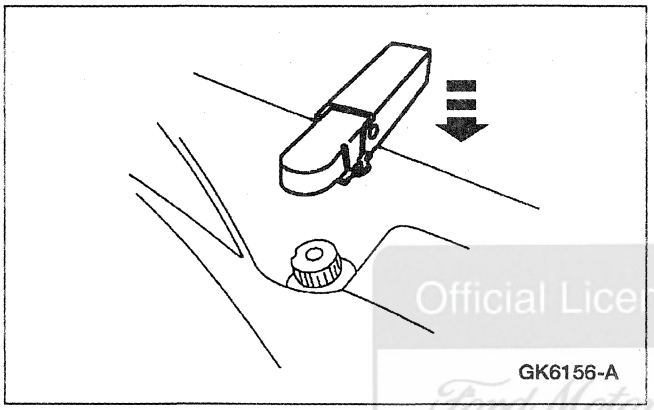

1. **NOTE:** Before installing the windshield wiper pivot arm and blade assemblies to the pivot shafts, cycle the windshield wiper motor and turn off the multi-function switch to make sure the pivot shafts are in the park position.

   Index the keyway in the RH pivot shaft with the key in the windshield wiper pivot arm and install the windshield wiper pivot arms.

Official Licensed Product
Ford Motor Company

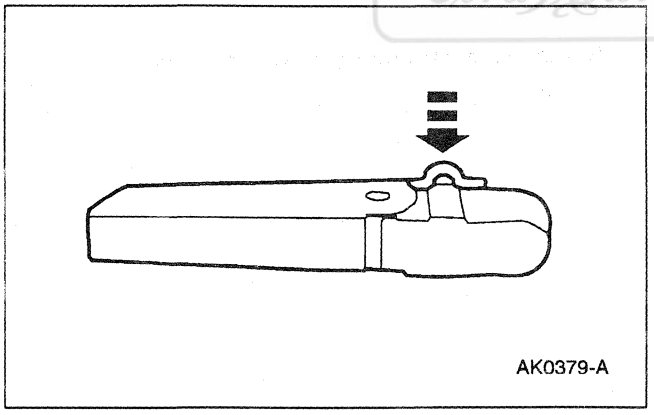

2. Raise the windshield wiper blade end of the windshield wiper pivot arm off the windshield and push in the slide latch.

REMOVAL AND INSTALLATION (Continued)

Mounting Arm and Pivot Shaft — Assembly

Removal

⚠ **CAUTION: The internal permanent magnets used in the windshield wiper motor (17508) are a ceramic (glass-like) material. Care must be exercised in handling the windshield wiper motor to avoid damaging the magnets. The windshield wiper motor must not be struck or tapped with a hammer or other object.**

1. Remove the pivot arms; refer to Pivot Arm.

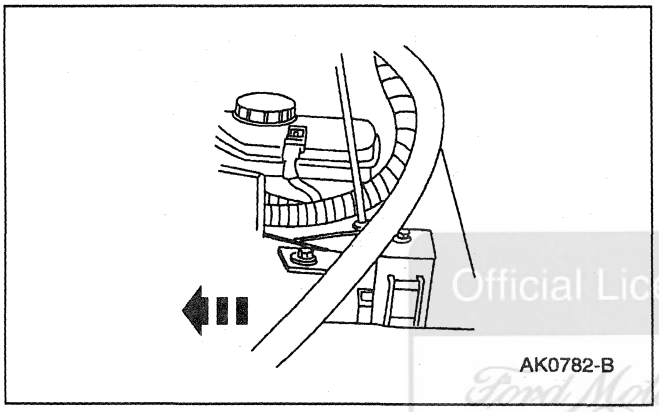
AK0782-B

2. Remove the cowl vent screen seal.

Official Licensed Product
Ford Motor Company

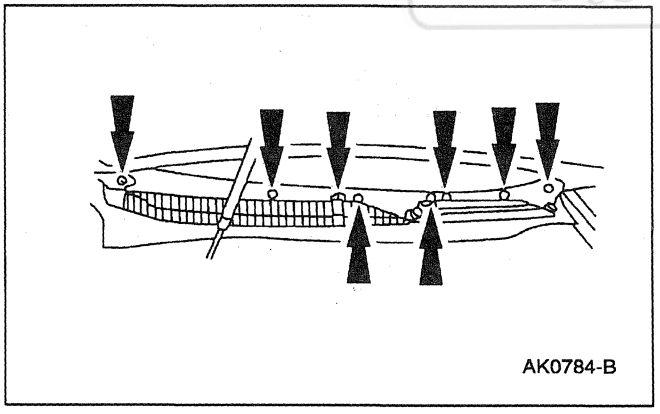
AK0784-B

3. Remove the RH and LH cowl vent screen retainers.

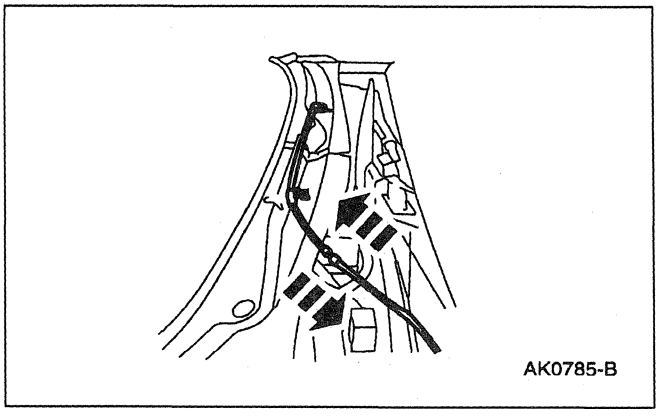
AK0785-B

4. Turn the cowl vent screens over and disconnect the windshield washer supply hose from the windshield washer nozzle jet and bracket (17603).

REMOVAL AND INSTALLATION (Continued)

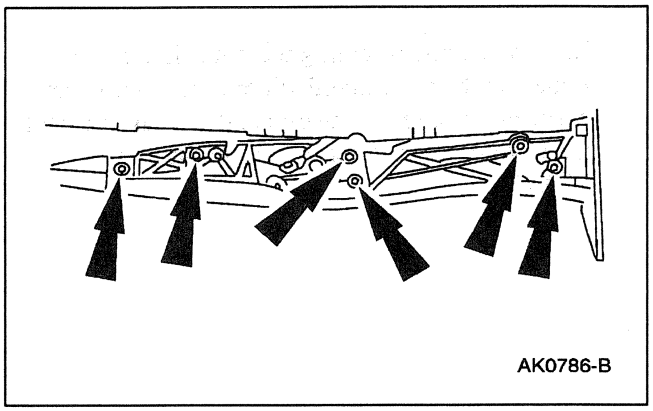

5. Remove the windshield mounting arm and pivot shaft bolts.

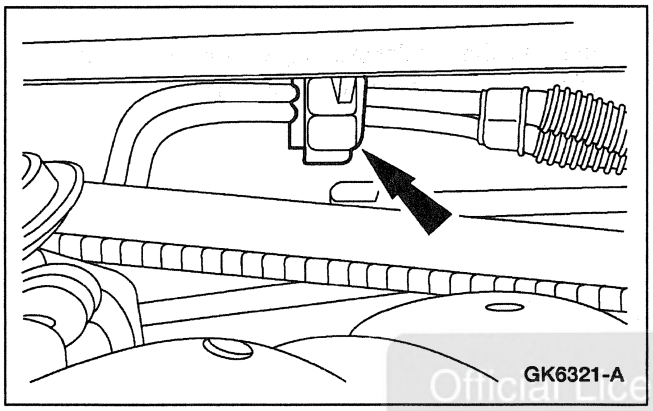

6. Position the fuel lines away from the windshield wiper mounting arm and pivot shaft assembly.

Official Licensed Product
Ford Motor Company

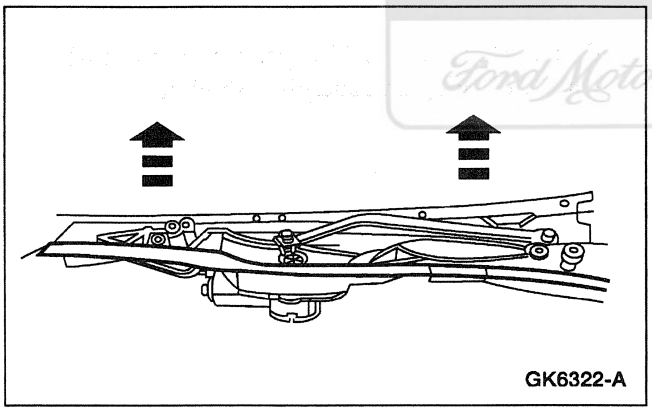

7. Lift the windshield wiper mounting arm and pivot shaft assembly slightly, move the windshield wiper mounting arm and pivot shaft assembly sideways about 50.8 mm (2 in) toward the passenger side and remove the windshield wiper mounting arm and pivot shaft assembly from the vehicle far enough to access the windshield wiper motor electrical connector.

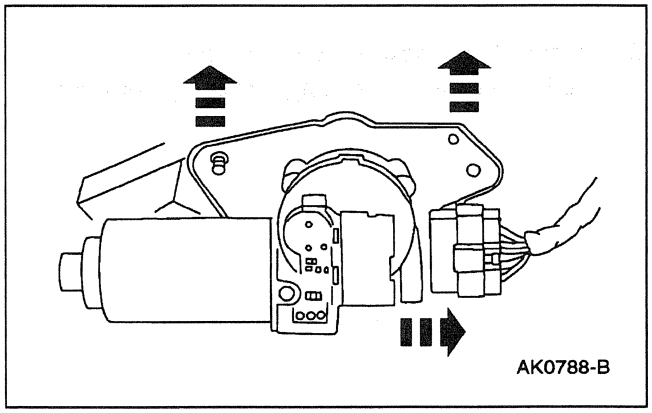

8. Disconnect the electrical connector from the windshield wiper motor. Remove the windshield wiper mounting arm and pivot shaft assembly from vehicle.

REMOVAL AND INSTALLATION (Continued)

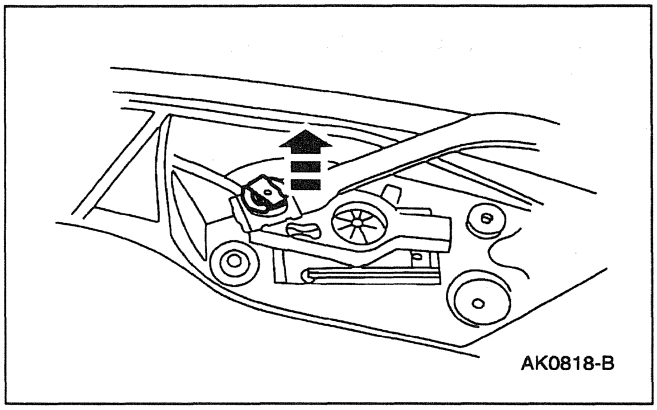

9. Remove the clip retaining the windshield wiper linkage to the windshield wiper motor output arm by lifting the edge of the clip to disengage the slot in the windshield wiper motor output arm (17A436).

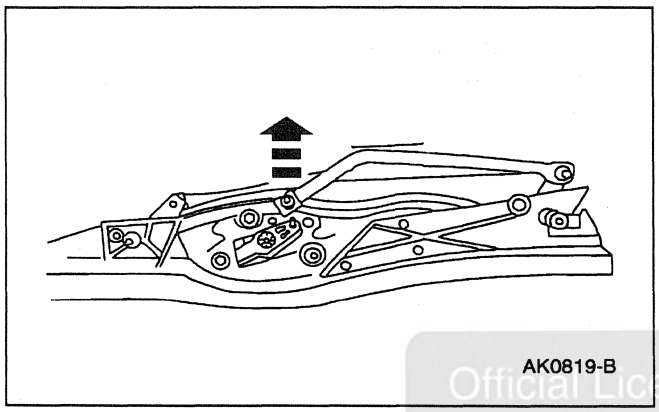

10. Remove the windshield wiper linkage from the windshield wiper motor output arm.

Official Licensed Product
Ford Motor Company

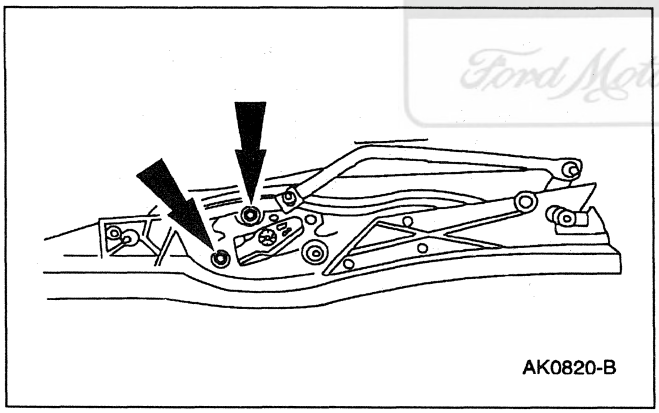

11. Remove the windshield wiper motor to windshield wiper mounting arm and pivot shaft bolts.

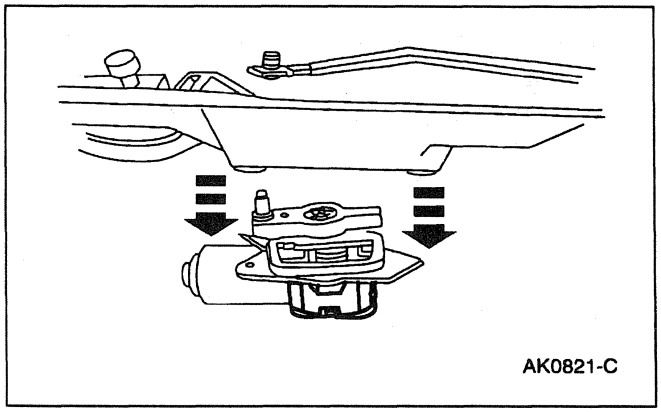

12. Remove the windshield wiper motor from the windshield wiper mounting arm and pivot shaft.

REMOVAL AND INSTALLATION (Continued)

Installation

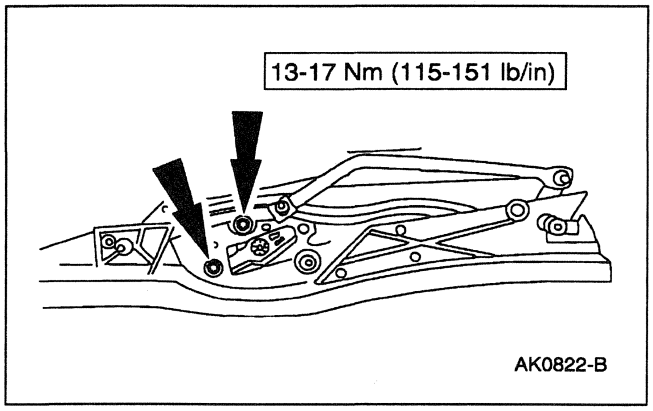

1. **CAUTION: Before installing the windshield wiper pivot arm and blade assemblies to the pivot shafts, cycle the windshield wiper motor and turn off the multi-function switch (13K359) to make sure the pivot shafts are in the park position.**

   NOTE: When installing the RH windshield wiper pivot shaft, index the keyway in the pivot shaft with the key in the windshield wiper pivot arm (17526).

   NOTE: When installing the drive arm to a new windshield wiper motor, follow the instructions included in the new windshield wiper motor kit.

   To install, reverse the removal procedure.

Motor — Windshield Wiper

Removal and Installation

To remove and install the windshield wiper motor, refer to Mounting Arm and Pivot Shaft.

Official Licensed Product
Ford Motor Company

Washer Pump and Reservoir

Removal

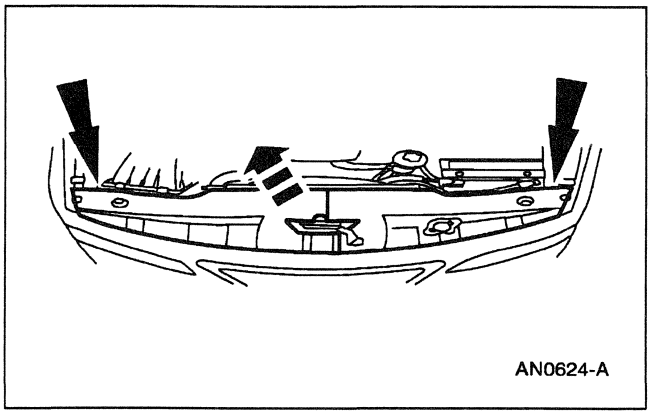

1. Remove the radiator upper sight shield (8C291).

REMOVAL AND INSTALLATION (Continued)

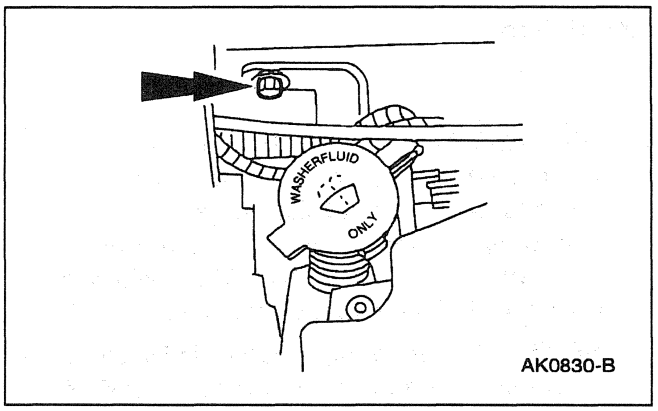

2. Remove the windshield washer reservoir support bracket to radiator support retaining bolt.

3. Raise and support the vehicle; refer to Section 100-02.

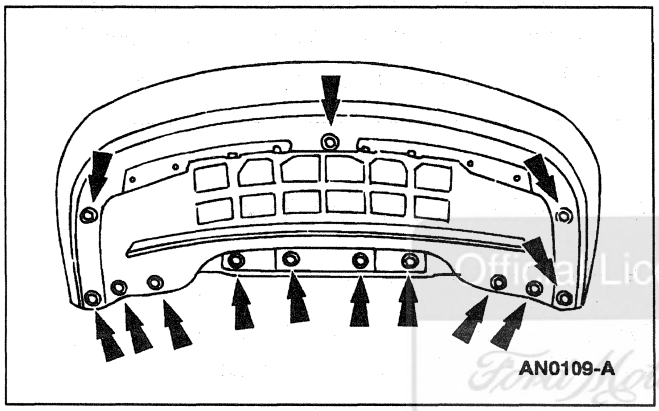

4. Remove the front valance panel screws and the front valance panel (17626).

Official Licensed Product
Ford Motor Company

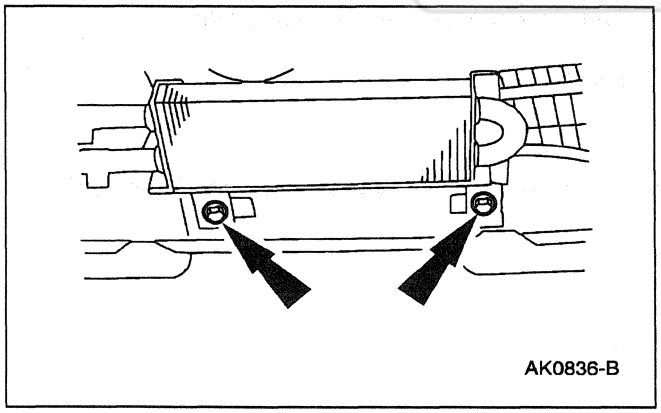

5. Remove the power steering fluid cooler bolts and position aside.

REMOVAL AND INSTALLATION (Continued)

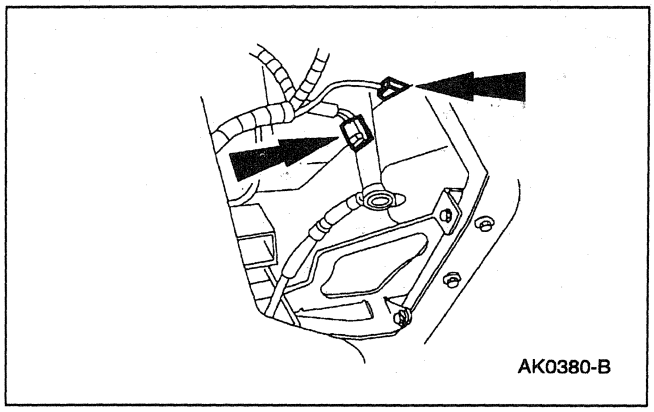

6. Disconnect both the electrical connectors from the windshield washer reservoir (17618).

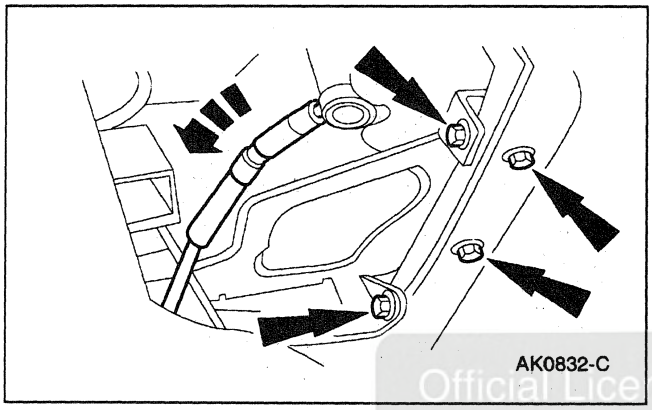

7. Remove the windshield washer reservoir.
   - Remove the mounting bolts.
   - **NOTE:** The windshield washer reservoir will drain with the windshield washer hose disconnected.

     Disconnect the windshield washer hose from the windshield washer pump (17664) and remove the windshield washer reservoir.

Official Licensed Product
Ford Motor Company

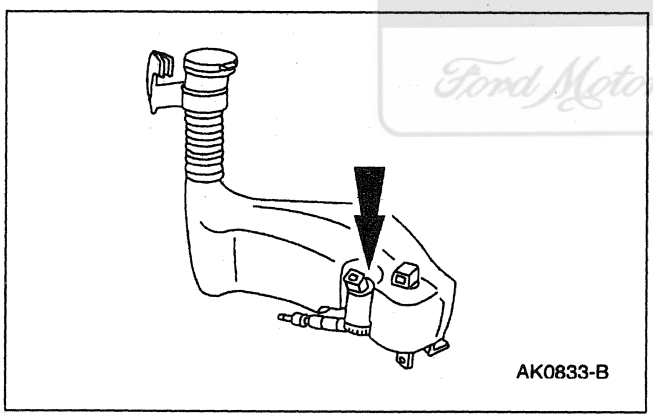

8. Use a thin, flat blade screwdriver to remove the windshield washer pump from the windshield washer reservoir.

REMOVAL AND INSTALLATION (Continued)

Installation

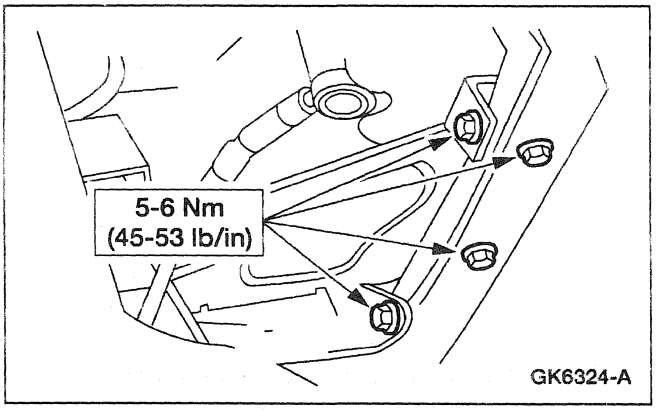

1. **WARNING: WINDSHIELD WASHER SOLUTION CONTAINS METHANOL WHICH IS POISONOUS. OBSERVE ALL CAUTIONS AND WARNINGS INDICATED ON LABEL OF WASHER SOLUTION CONTAINER.**

   To install, reverse the removal procedure.

Control Module — Windshield Wiper

Removal

1. Move the steering column to the full out and down position.

Official Licensed Product
Ford Motor Company

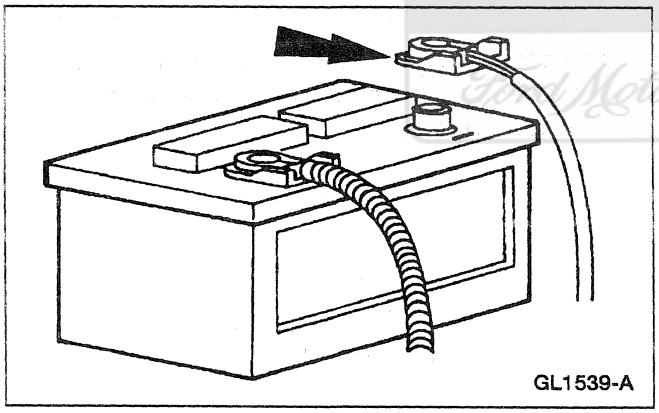

2. **CAUTION: Electronic modules are sensitive to electrical charges. If exposed to these charges, damage may result.**

   Disconnect the battery ground cable.

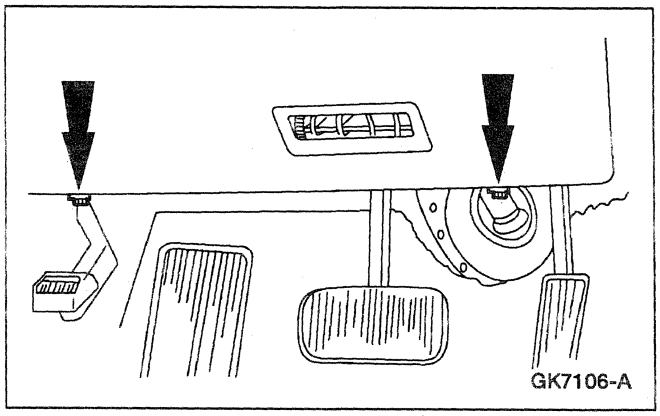

3. Remove the screws and the instrument panel steering column cover.

REMOVAL AND INSTALLATION (Continued)

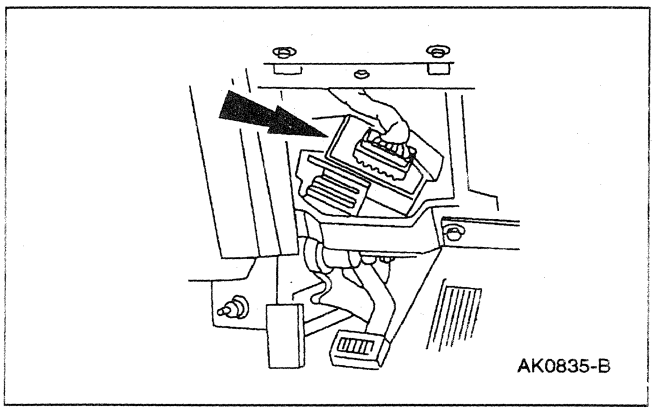

4. Disconnect the electrical connector from the windshield wiper control module.

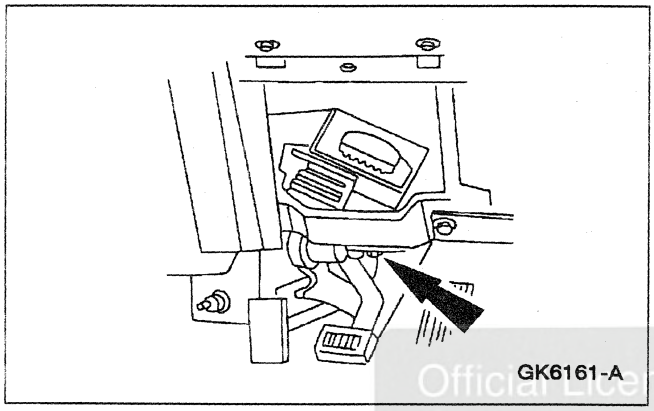

5. Remove the windshield wiper control module.
   - Remove the windshield wiper control module mounting bracket to instrument panel screw and remove the windshield wiper control module and bracket assembly.

Official Licensed Product
Ford Motor Company

Installation

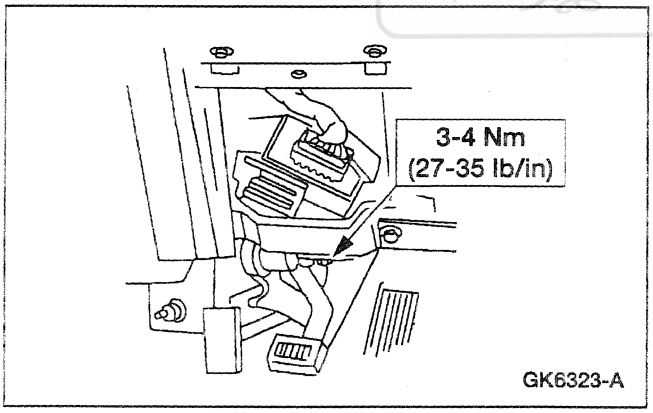

1. **NOTE:** When the battery is disconnected and reconnected, some abnormal drive symptoms may occur while the vehicle relearns its adaptive strategy. The vehicle may need to be driven 16 km (10 mi) or more to relearn the strategy.

   To install, reverse the removal procedure.

SPECIFICATIONS

Torque Specifications

Description	Nm	Lb/In
Battery Ground Cable	7-10	62-89
Windshield Washer Reservoir Retaining Screws	5-6	45-53

(Continued)

Torque Specifications

Description	Nm	Lb/In
Windshield Wiper Assembly-to-Cowl Bolts	10-14	89-124

(Continued)

SPECIFICATIONS (Continued)

Torque Specifications

Description	Nm	Lb/In
Windshield Wiper Control Module-to-Instrument Panel Screw	3-4	27-35
Windshield Wiper Motor-to-Windshield Wiper Mounting Arm and Pivot Shaft Bolts	13-17	115-151

Official Licensed Product
Ford Motor Company

SECTION 501-17 Sliding Roof Panel

VEHICLE APPLICATION: Mark VIII

SUBJECT	PAGE
DESCRIPTION AND OPERATION	
Sliding Roof Panel	501-17-2
DIAGNOSIS AND TESTING	
Sliding Roof Panel	501-17-4
Inspection and Verification	501-17-4
Pinpoint Tests	501-17-5
Symptom Chart	501-17-4
REMOVAL AND INSTALLATION	
Air Deflector	501-17-41
Control Module	501-17-43
Control Module — Wire Harness	501-17-44
Glass — Roof Sliding Outer Panel	501-17-35
Motor	501-17-38
Opening Shield — Roof Sliding Panel	501-17-37
Panel — Roof Sliding	501-17-32
Switch	501-17-42
Trough Assembly	501-17-40
GENERAL PROCEDURES	
Height Adjustment	501-17-45
Motor Synchronization	501-17-47
SPECIFICATIONS	501-17-49

Official Licensed Product
Ford Motor Company

DESCRIPTION AND OPERATION

Sliding Roof Panel

The electric sliding roof panel is available as an option.

The system operates in the following manner:

- When the roof sliding panel switch (15B691) is rocked rearward, the roof opening glass (500A18) slides into the storage space between the roof trim panel (51968) and the roof panel (502B98) exposing an opening over the front seats.
- When the roof sliding panel switch is rocked forward with the roof opening glass fully back in the storage space, the roof opening glass moves forward from the storage position.

Near the end of the forward travel, the rear portion of the roof opening glass moves upward on two lifter arms. This allows a weather-tight seal when the roof opening glass is closed.

- When the roof sliding panel switch is rocked forward with the roof opening glass fully forward, the rear of the roof opening glass pops up to the VENT position.
- With the roof opening glass in the VENT position, rocking the roof sliding panel switch rearward closes the roof opening glass.
- The roof opening glass is manually slid forward and backward to cover the opening when the roof opening glass is in the flush position. If the roof opening glass is in the forward position when the roof sliding panel switch is rocked rearward the roof opening glass will be dragged rearward by the roof opening glass.
- The control module provides the logic for the roof panel operation.

Official Licensed Product
Ford Motor Company

DESCRIPTION AND OPERATION (Continued)

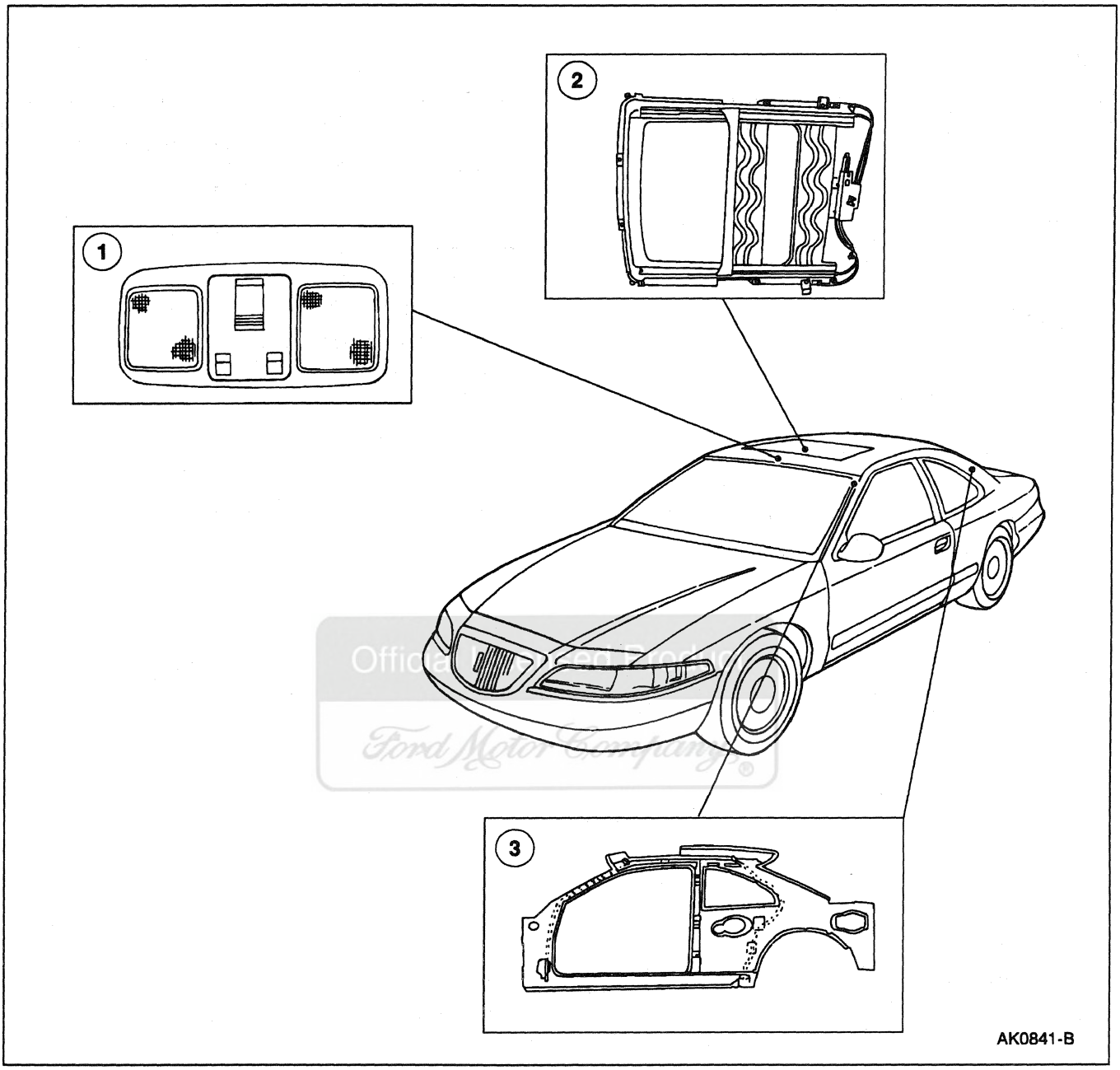

Item	Part Number	Description
1	502B98	Roof Panel
2	15B691	Roof Sliding Panel Switch

Item	Part Number	Description
3	502C52	Sliding Roof Panel Frame Drain Hose

(Continued)

DIAGNOSIS AND TESTING

Sliding Roof Panel

Refer to Electrical and Vacuum Troubleshooting Manual, Cell 101, Power Moon Roof for schematic and connector information.

Special Tool(s)

ST1137-A	73 Digital Multimeter 105-R0051 or equivalent

Inspection and Verification

1. Verify the customer's concern by operating the roof panel (502B98) to duplicate the condition.
2. Inspect to determine if one of the following mechanical or electrical concerns apply:

Visual Inspection Chart

Mechanical	Electrical
• Damaged roof panel. • Obstructed roof panel. • Guide. • Damaged drive cable(s).	• Fuse junction panel Fuse 16 (20A). • Circuitry open/shorted. • Damaged roof sliding panel switch. • Damaged sliding roof panel motor.

3. If the inspection reveals obvious concern(s) that can be readily identified, service as required.
4. If the concern(s) remains after the inspection, determine the condition(s) and go to the Symptom Chart.

Symptom Chart

Refer to the Electrical and Vacuum Troubleshooting Manual for the connectors cited in the pinpoint tests.

SYMPTOM CHART

Condition	Possible Source	Action
• The Sliding Roof Panel Has Excessive Wind Noise	• Improper adjustment. • The roof sliding panel seal is damaged or not installed properly.	• GO to Pinpoint Test A.
• The Sliding Roof Panel Leaks	• Improper adjustment. • The sliding roof panel frame drain hoses are blocked/damaged. • The roof sliding panel seals are damaged or not installed properly.	• GO to Pinpoint Test B.
• The Sliding Roof Panel Is Noisy During Operation	• The roof opening glass is not installed properly. • Obstructions in the roof sliding panel rail and guide or troughs. • The rear guide pin is not installed properly. • The rear roof sliding panel lifters are not installed properly. • Damaged sliding roof panel motor.	• GO to Pinpoint Test C.
• The Sliding Roof Panel Does Not Open or Close	• Damaged fuse junction panel Fuse 16 (20A). • The circuitry is open/shorted. • Damaged roof sliding panel switch. • Damaged sliding roof panel motor.	• GO to Pinpoint Test D.

DIAGNOSIS AND TESTING (Continued)

SYMPTOM CHART (Continued)

Condition	Possible Source	Action
• The Sliding Roof Panel Does Not Open or Close in Vent Position	• The rear guide pin is not properly engaged in the cam slot of the roof sliding panel lifters.	• GO to Pinpoint Test E.
• The Sliding Roof Panel Does Not Stop In Flush From Any Position	• Damaged roof sliding panel switch. • Damaged sliding roof panel motor. • Circuitry.	• GO to Pinpoint Test F.
• The Express Open Is Inoperative	• The sliding roof panel module. • The sliding roof panel motor. • The circuitry.	• GO to Pinpoint Test G. REFER to Motor in this section.
• The Sliding Roof Panel Will Not Slide Closed Or Will Not Vent Up	• The sliding roof panel module. • The roof sliding panel switch. • The circuitry.	• GO to Pinpoint Test H.
• The Sliding Roof Panel Will Not Slide Open Or Will Not Close From The Vent Position	• The sliding roof panel module. • The roof sliding panel switch. • The circuitry.	• GO to Pinpoint Test J.

Pinpoint Tests

PINPOINT TEST A: THE SLIDING ROOF PANEL HAS EXCESSIVE WIND NOISE

TEST CONDITIONS	TEST DETAILS/RESULTS/ACTIONS
A1 CHECK THE ROOF SLIDING OUTER GLASS PANEL FIT	
	1 Cycle the roof opening glass from the full-open to the full-closed position. 2 Inspect the roof sliding outer glass panel seal for proper fit or damage. • Is the roof sliding outer glass panel seal OK? → **Yes** GO to **A2**. → **No** REFER to Glass—Roof Sliding Outer Panel in this section.

(Continued)

DIAGNOSIS AND TESTING (Continued)

PINPOINT TEST A: THE SLIDING ROOF PANEL HAS EXCESSIVE WIND NOISE (Continued)

TEST CONDITIONS	TEST DETAILS/RESULTS/ACTIONS
A2 CHECK THE ROOF SLIDING OUTER GLASS PANEL OPERATION	
	1 Cycle the roof opening glass from the full-open to the full-closed position. • Does the roof opening glass travel to the full-open and the full-closed position? → **Yes** REFER to Glass—Roof Sliding Outer Panel in this section. → **No** REFER to Height Adjustment in this section.

PINPOINT TEST B: THE SLIDING ROOF PANEL LEAKS

TEST CONDITIONS	TEST DETAILS/RESULTS/ACTIONS
B1 CHECK THE SLIDING ROOF PANEL OPERATION	
	1 Cycle the roof opening glass from the full-open position to the full-closed position. • Does the roof opening glass operate smoothly and close tightly? → **Yes** GO to **B2**. → **No** REFER to Glass—Roof Sliding Outer Panel in this section. REPAIR as required. TEST the system for normal operation.
B2 CHECK THE SLIDING ROOF PANEL FRAME DRAIN TUBES	
	1 Gain access to the roof sliding outer glass panel frame drain tubes; refer to Glass—Roof Sliding Outer Panel in this section. • Is there blockage or damage to the roof opening glass frame drain tubes? → **Yes** REPLACE the sliding roof panel frame drain tubes as required. → **No** GO to **B3**.

(Continued)

Official Licensed Ford Motor Company®

DIAGNOSIS AND TESTING (Continued)

PINPOINT TEST B: THE SLIDING ROOF PANEL LEAKS (Continued)

TEST CONDITIONS	TEST DETAILS/RESULTS/ACTIONS
B3 CHECK THE ROOF SLIDING PANEL SEALS	
	1 Actuate the roof opening glass to the full-open position. • Is the roof sliding outer glass panel seal damaged? → **Yes** REFER to Glass—Roof Sliding Outer Panel in this section. → **No** REPAIR as required. TEST the system for normal operation.

PINPOINT TEST C: THE SLIDING ROOF PANEL IS NOISY DURING OPERATION

TEST CONDITIONS	TEST DETAILS/RESULTS/ACTIONS
C1 CHECK THE OPERATION OF THE ROOF SLIDING OUTER GLASS PANEL	
	1 Cycle the roof opening glass from the full-open to the full-closed position. • Is the roof opening glass loose? → **Yes** REFER to Glass—Roof Sliding Outer Panel in this section. REPAIR as required. → **No** GO to **C2**.
C2 CHECK FOR OBSTRUCTIONS	
	1 Check for foreign material or looseness. • Is the roof sliding outer glass panel seal properly positioned? → **Yes** GO to **C3**. → **No** REFER to Glass—Roof Sliding Outer Panel in this section for the proper installation. TEST the system for normal operation.

(Continued)

Official Licensed Product
Ford Motor Company

DIAGNOSIS AND TESTING (Continued)

PINPOINT TEST C: THE SLIDING ROOF PANEL IS NOISY DURING OPERATION (Continued)

TEST CONDITIONS	TEST DETAILS/RESULTS/ACTIONS
C3 CHECK THE SLIDING ROOF PANEL MOTOR	
	[1] Cycle the roof opening glass from the full-open to the full-closed position. • Does the sliding roof panel motor make excessive noise? → **Yes** CHECK the sliding roof panel motor for the proper mounting. If mounted properly, REPLACE the sliding roof panel motor. TEST the system for normal operation. → **No** GO to **C4**.
C4 CHECK THE LIFTER ASSEMBLIES	
	[1] Gain access to the roof sliding. • Are the roof sliding panel lifters installed and properly located? → **Yes** REFER to Height Adjustment in this section to check flushness. CHECK and ADJUST the roof sliding outer glass panel as required. TEST the system for normal operation. → **No** REFER to Glass—Roof Sliding Outer Panel in this section. TEST the system for normal operation.

Official Licensed Product
Ford Motor Company

DIAGNOSIS AND TESTING (Continued)

PINPOINT TEST D: THE SLIDING ROOF PANEL DOES NOT OPEN OR CLOSE

TEST CONDITIONS	TEST DETAILS/RESULTS/ACTIONS
D1 CHECK THE POWER SUPPLY TO THE MODULE	
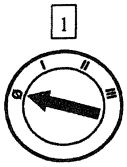 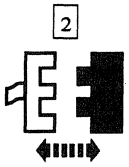 Sliding Roof Panel Module Connector C914 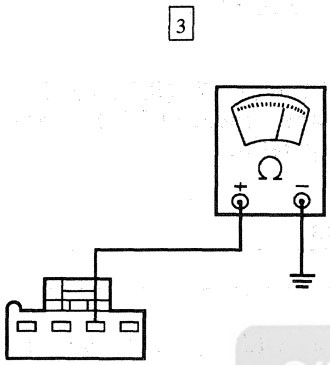 AR0352-B 	3 Measure the voltage at sliding roof panel module Connector C914, Circuit (R/LB). • Is the voltage reading B+? → **Yes** GO to **D4.** → **No** GO to **D2.**

Official Licensed Product
Ford Motor Company

(Continued)

DIAGNOSIS AND TESTING (Continued)

PINPOINT TEST D: THE SLIDING ROOF PANEL DOES NOT OPEN OR CLOSE (Continued)

TEST CONDITIONS	TEST DETAILS/RESULTS/ACTIONS
D2 CHECK FUSE JUNCTION PANEL FUSE 16 (20A)	
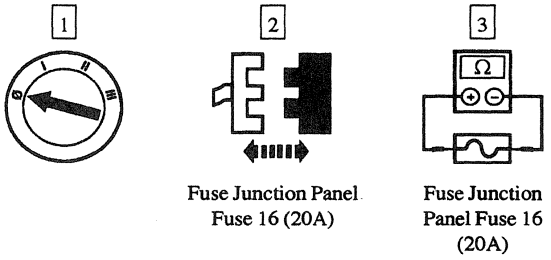 Fuse Junction Panel Fuse 16 (20A) — Fuse Junction Panel Fuse 16 (20A)	• Is Fuse 16 (20A) OK? → **Yes** REPAIR Circuit 170 (R/LB) or Circuit (R/LB) for an open. TEST the system for normal operation. → **No** GO to **D3**.
D3 CHECK CIRCUIT 170 (R/LB) FOR A SHORT TO GROUND	
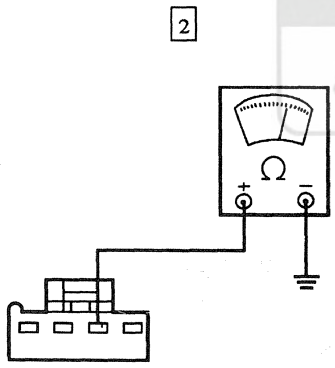 AR0352-B	1 Make sure Fuse 16 (20A) is still removed. 2 Measure the resistance between sliding roof panel module connector Pin C914, Circuit (R/LB) or Circuit (R/LB) and ground. • Is the resistance reading 10 K ohms or less? → **Yes** REPAIR Circuit 170 (R/LB) or Circuit (R/LB) for a short to ground. TEST the system for normal operation. → **No** REPLACE the fuse junction panel Fuse 16 (20A). If the fuse opens again, REPLACE the sliding roof panel module. TEST the system for normal operation.

(Continued)

Official Licensed Product Ford Motor Company

DIAGNOSIS AND TESTING (Continued)

PINPOINT TEST D: THE SLIDING ROOF PANEL DOES NOT OPEN OR CLOSE (Continued)

TEST CONDITIONS	TEST DETAILS/RESULTS/ACTIONS
D4 CHECK CIRCUIT 57 (BK) OR CIRCUIT (BK) FOR AN OPEN	
1 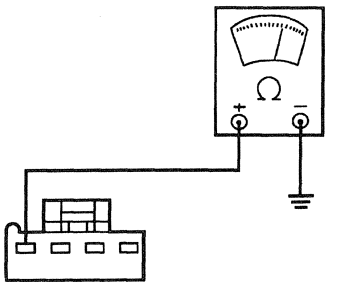 AR0354-B	1 Measure the resistance between sliding roof panel module connector Pin C914, Circuit (BK) and ground. • Is the resistance reading 5 ohms or less? → **Yes** GO to **D5**. → **No** REPAIR Circuit 57 (BK) or Circuit (BK) for an open. TEST the system for normal operation.
D5 CHECK THE SLIDING ROOF PANEL SWITCH	
1 Sliding Roof Panel Module Connector C915 2 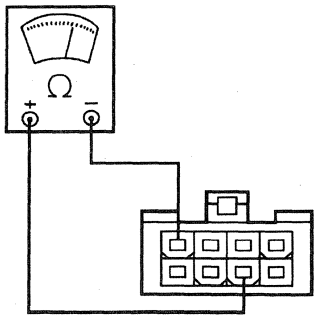 AR0355-B	2 Measure the resistance between sliding roof panel module connector Pin C915-5, Circuit (T/R) and Pin C915-3, Circuit (BR/O).

Official Licensed Product
Ford Motor Company

(Continued)

DIAGNOSIS AND TESTING (Continued)

PINPOINT TEST D: THE SLIDING ROOF PANEL DOES NOT OPEN OR CLOSE (Continued)

TEST CONDITIONS	TEST DETAILS/RESULTS/ACTIONS
D5 CHECK THE SLIDING ROOF PANEL SWITCH (Continued)	
3 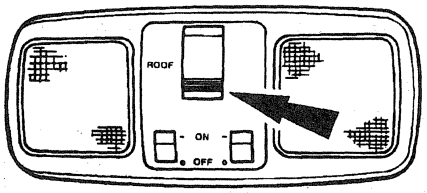 AR0379-A	3 Press the roof sliding panel switch to the CLOSE position. • Is the resistance reading 5 ohms or less? → **Yes** GO to **D7**. → **No** GO to **D6**.
D6 CHECK CIRCUIT 1173 (BR/O) AND CIRCUIT (BR/O) FOR AN OPEN	
1 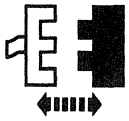 Sliding Roof Panel Switch Connector C904 2 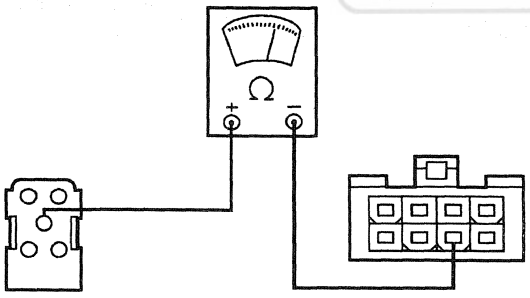 AR0356-B	2 Measure the resistance between sliding roof panel module connector Pin C915-3, Circuit (BR/O) and sliding roof panel switch connector Pin C904-3, Circuit 1173 (BR/O). • Is the resistance reading 5 ohms or less? → **Yes** REPLACE the roof sliding panel switch. TEST the system for normal operation. → **No** REPAIR Circuit 1173 (BR/O) or Circuit (BR/O) for an open. TEST the system for normal operation.

Official Licensed Product
Ford Motor Company

(Continued)

DIAGNOSIS AND TESTING (Continued)

PINPOINT TEST D: THE SLIDING ROOF PANEL DOES NOT OPEN OR CLOSE (Continued)

TEST CONDITIONS	TEST DETAILS/RESULTS/ACTIONS
D7 CHECK THE SLIDING ROOF PANEL MOTOR	
1 Sliding Roof Panel Switch Connector C904 2 Sliding Roof Panel Module Connector C914 and C915 3 Sliding Roof Panel Motor Connector C913 4 	
5 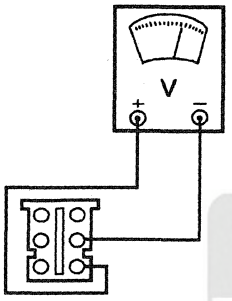 AR0357-B	5 Measure the voltage at sliding roof panel motor connector Pin C913-1, Circuit (BL) and Pin C913-3, Circuit (P).
6 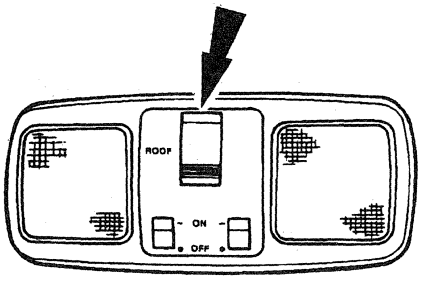 AR0378-A	6 Press the roof sliding panel switch to the OPEN position. • Is the voltage reading B+? → **Yes** GO to **D8**. → **No** GO to **D14**.

Official Licensed Product
Ford Motor Company

(Continued)

DIAGNOSIS AND TESTING (Continued)

PINPOINT TEST D: THE SLIDING ROOF PANEL DOES NOT OPEN OR CLOSE (Continued)

TEST CONDITIONS	TEST DETAILS/RESULTS/ACTIONS
D8 CHECK CIRCUIT (W)	
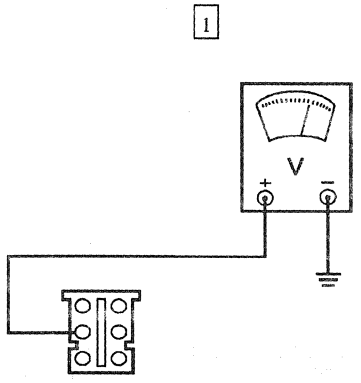 AR0358-B	1 Measure the voltage at sliding roof panel motor connector Pin C913-5, Circuit (W). • Is the voltage reading approximately 5 volts? → **Yes** GO to **D11**. → **No** GO to **D9**.
D9 CHECK CIRCUIT (W) FOR AN OPEN	
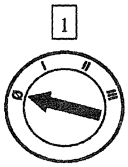 Sliding Roof Panel Module Connector C915 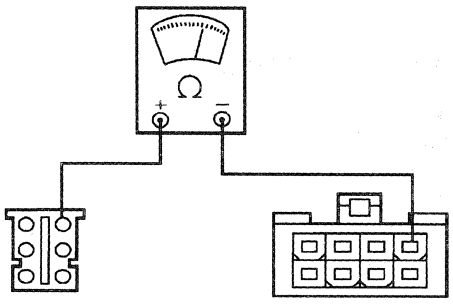 AR0359-B	3 Measure the resistance between sliding roof panel motor connector Pin 3 and sliding roof panel module connector Pin C915-4. • Is the resistance reading 5 ohms or less? → **Yes** GO to **D10**. → **No** REPAIR Circuit (W) for an open. REPLACE the sliding roof panel motor. TEST the system for normal operation.

Official Licensed Product
Ford Motor Company

(Continued)

DIAGNOSIS AND TESTING (Continued)

PINPOINT TEST D: THE SLIDING ROOF PANEL DOES NOT OPEN OR CLOSE (Continued)

TEST CONDITIONS	TEST DETAILS/RESULTS/ACTIONS
D10 CHECK CIRCUIT (W) FOR A SHORT TO GROUND	
1 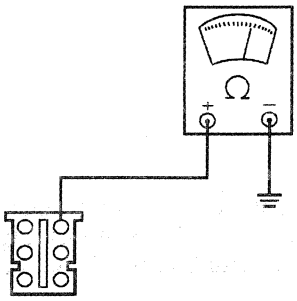 AR0360-B	1 Measure the resistance between sliding roof panel motor connector Pin C913-5, Circuit (W) and ground. • Is the resistance reading 10 K ohms or less? → **Yes** REPAIR Circuit (W) for a short to ground. REPLACE the sliding roof panel motor. TEST the system for normal operation. → **No** REPLACE the sliding roof panel module. REPLACE the sliding roof panel motor. TEST the system for normal operation.
D11 CHECK CIRCUIT (BK)	
1 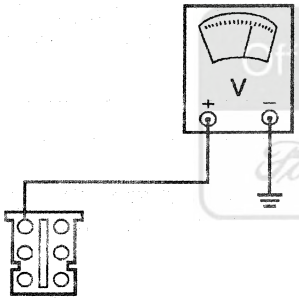 AR0361-B	1 Measure the voltage at sliding roof panel motor connector Pin C913-6, Circuit (BK). • Is the voltage reading approximately 5 volts? → **Yes** REPLACE the sliding roof panel motor. TEST the system for normal operation. → **No** GO to **D12**.

Official Licensed Product
Ford Motor Company

(Continued)

DIAGNOSIS AND TESTING (Continued)

PINPOINT TEST D: THE SLIDING ROOF PANEL DOES NOT OPEN OR CLOSE (Continued)

TEST CONDITIONS	TEST DETAILS/RESULTS/ACTIONS
D12 CHECK CIRCUIT (BK) FOR AN OPEN	
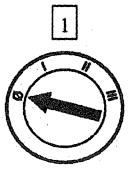 1 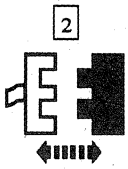 2 Sliding Roof Panel Module Connector C915 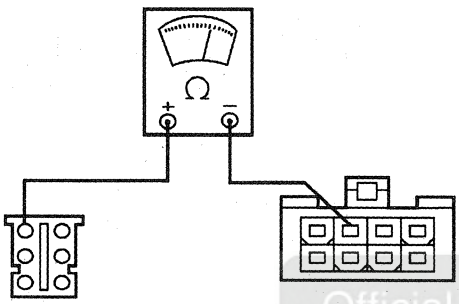 3 AR0362-B	3 Measure the resistance between sliding roof panel motor connector Pin C913-6 and sliding roof panel module connector Pin C915-6, Circuit (BK). • Is the resistance reading 5 ohms or less? → **Yes** GO to **D13**. → **No** REPAIR Circuit (BK) for an open. REPLACE the sliding roof panel motor. TEST the system for normal operation.
D13 CHECK CIRCUIT (BK) FOR A SHORT TO GROUND	
1 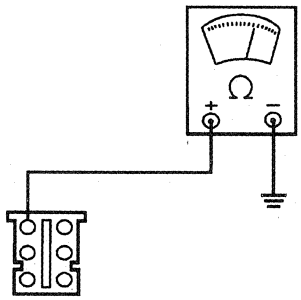 AR0363-B	1 Measure the resistance between sliding roof panel motor connector Pin C913-6, Circuit (BK) and ground. • Is the resistance reading 10 K ohms or less? → **Yes** REPAIR Circuit (BK) for a short to ground. REPLACE the sliding roof panel motor. TEST the system for normal operation. → **No** REPLACE the sliding roof panel module. REPLACE the sliding roof panel motor. TEST the system for normal operation.

Official Licensed Product
Ford Motor Company

(Continued)

DIAGNOSIS AND TESTING (Continued)

PINPOINT TEST D: THE SLIDING ROOF PANEL DOES NOT OPEN OR CLOSE (Continued)

TEST CONDITIONS	TEST DETAILS/RESULTS/ACTIONS
D14 CHECK CIRCUIT (B) FOR AN OPEN	
1 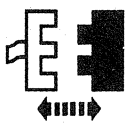 Sliding Roof Panel Module Connector C914 2 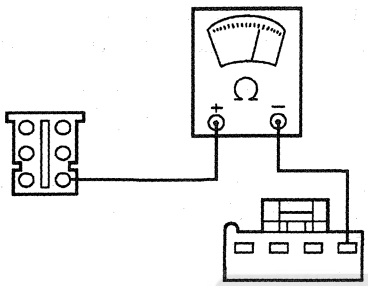 AR0364-B	2 Measure the resistance between sliding roof panel motor connector Pin C913-1 and sliding roof panel module Connector C914, Circuit (BL). • Is the resistance reading 5 ohms or less? → **Yes** GO to **D15**. → **No** REPAIR Circuit (BL) for an open. TEST the system for normal operation.
D15 CHECK CIRCUIT (P) FOR AN OPEN	
1 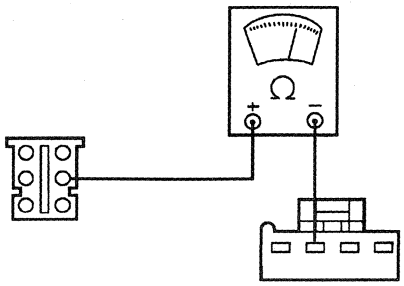 AR0365-B	1 Measure the resistance between sliding roof panel motor connector Pin C913-3 and sliding roof panel module Connector C914, Circuit (P). • Is the resistance reading 5 ohms or less? → **Yes** REPLACE the sliding roof panel module. TEST the system for normal operation. → **No** REPAIR Circuit (P) for an open. TEST the system for normal operation.

Official Licensed Product
Ford Motor Company

DIAGNOSIS AND TESTING (Continued)

PINPOINT TEST E: THE SLIDING ROOF PANEL DOES NOT OPEN OR CLOSE IN VENT POSITION

TEST CONDITIONS	TEST DETAILS/RESULTS/ACTIONS
E1 CHECK THE REAR LIFTER ASSEMBLIES	
	1 With the roof opening glass at the full-closed position, turn the ignition switch to RUN. Momentarily press the roof sliding outer glass panel switch to the CLOSE position. • Did the roof opening glass pop up? → **Yes** GO to **E2**. → **No** REFER to Glass—Roof Sliding Outer Panel in this section. TEST the system for normal operation.
E2 CHECK THE ROOF SLIDING OUTER GLASS PANEL VENT CLOSED OPERATION	
	1 Momentarily press the roof sliding outer glass panel switch to the OPEN position and observe the vent closing operation. • Did the roof opening glass pull down? → **Yes** REFER to Height Adjustment in this section to check flushness. → **No** GO to Pinpoint Test J.

Official Licensed Product
Ford Motor Company

DIAGNOSIS AND TESTING (Continued)

PINPOINT TEST F: THE SLIDING ROOF PANEL DOES NOT STOP IN FLUSH FROM ANY POSITION

TEST CONDITIONS	TEST DETAILS/RESULTS/ACTIONS
F1 CHECK CIRCUIT (BK) FOR VOLTAGE	
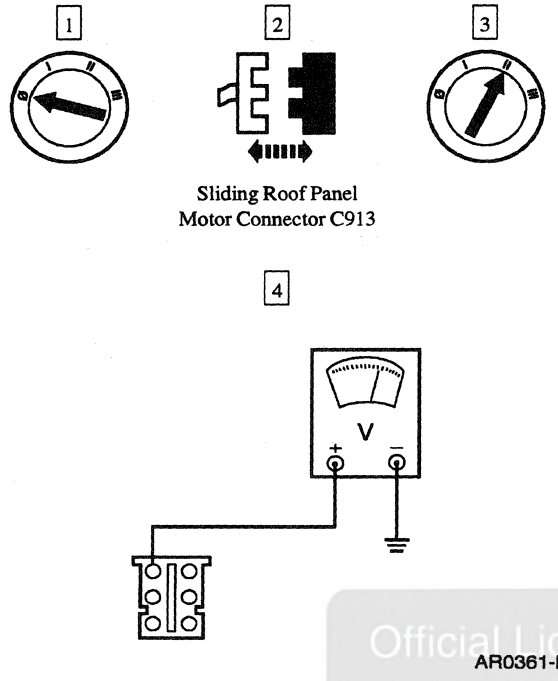	4 Measure the voltage at sliding roof panel motor connector Pin C913-6, Circuit (BK). • Is the voltage reading 5 volts? → **Yes** GO to **F4.** → **No** GO to **F2.**
F2 CHECK CIRCUIT (BK) FOR A SHORT TO GROUND	
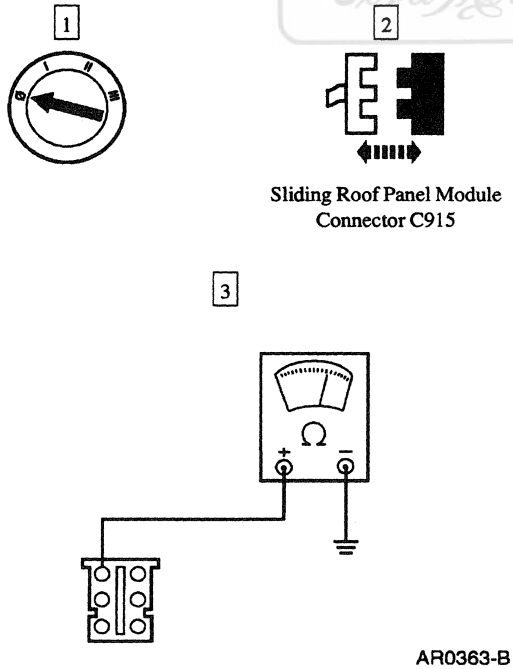	3 Measure the resistance between sliding roof panel motor connector Pin C913-6, Circuit (BK) and ground. • Is the resistance reading 10 K ohms or less? → **Yes** REPAIR Circuit (BK) for a short to ground. TEST the system for normal operation. → **No** GO to **F3.**

Official Licensed Product Ford Motor Company

(Continued)

DIAGNOSIS AND TESTING (Continued)

PINPOINT TEST F: THE SLIDING ROOF PANEL DOES NOT STOP IN FLUSH FROM ANY POSITION (Continued)

TEST CONDITIONS	TEST DETAILS/RESULTS/ACTIONS
F3 CHECK CIRCUIT (BK) FOR AN OPEN	
1 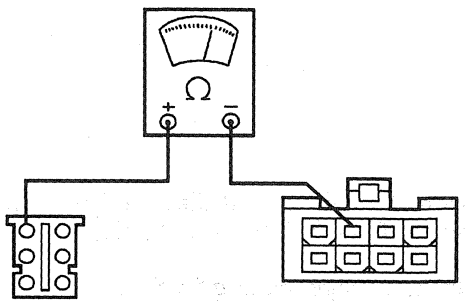 AR0362-B	1 Measure the resistance between sliding roof panel module connector Pin C915-6 and sliding roof panel motor connector Pin C913-6, Circuit (BK). • Is the resistance reading 5 ohms or less? → **Yes** REPLACE the sliding roof panel module. TEST the system for normal operation. → **No** REPAIR Circuit (BK) for an open. TEST the system for normal operation.
F4 CHECK THE SLIDING ROOF PANEL MOTOR LIMIT SWITCH	
1 Sliding Roof Panel Motor Connector C913 2 4 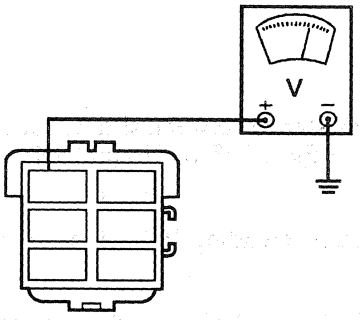 AR0366-B	3 Open the roof panel. 4 Measure the voltage at sliding roof panel motor connector (the motor side of the connector) Pin C913-6, Circuit (BK).

Official Licensed Product
Ford Motor Company

(Continued)

DIAGNOSIS AND TESTING (Continued)

PINPOINT TEST F: THE SLIDING ROOF PANEL DOES NOT STOP IN FLUSH FROM ANY POSITION (Continued)

TEST CONDITIONS	TEST DETAILS/RESULTS/ACTIONS
F4 CHECK THE SLIDING ROOF PANEL MOTOR LIMIT SWITCH (Continued)	
	5 Close the roof panel while monitoring the voltmeter. • Does the voltage reading change from 0 volts to 5 volts when the roof panel reaches the flush position? → **Yes** GO to **F6**. → **No** GO to **F5**.
F5 CHECK CIRCUIT (BK/W) FOR AN OPEN	
1 2 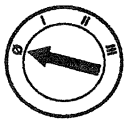 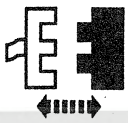 Sliding Roof Panel Motor Connector C913 3 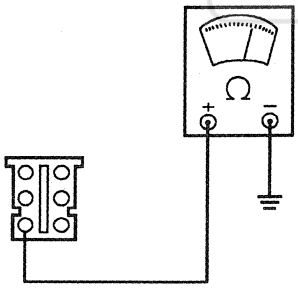 AR0367-B	3 Measure the resistance between sliding roof panel motor connector Pin C913-2, Circuit (BK/W) and ground. • Is the resistance reading 5 ohms or less? → **Yes** REPLACE the sliding roof panel motor. TEST the system for normal operation. → **No** REPAIR Circuit (BK/W) for an open. TEST the system for normal operation.
F6 CHECK MOTOR OPERATION	
1 2 Sliding Roof Panel Motor Connector C913	3 Open the roof panel.

(Continued)

Original Licensed Product Ford Motor Company

DIAGNOSIS AND TESTING (Continued)

PINPOINT TEST F: THE SLIDING ROOF PANEL DOES NOT STOP IN FLUSH FROM ANY POSITION (Continued)

TEST CONDITIONS	TEST DETAILS/RESULTS/ACTIONS
F6 CHECK MOTOR OPERATION (Continued)	
4 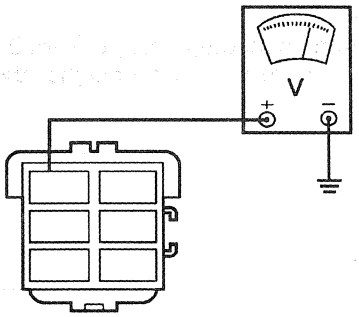 AR0366-B	4 Measure the voltage at sliding roof panel motor connector Pin C913-6, Circuit (BK) (the motor side of the connector). 5 Close the roof panel while monitoring the voltmeter. • Does the sliding roof panel motor stop when the voltage reading changes from 0 volts to 5 volts when the roof panel reaches the flush position? → **Yes** If the roof panel is in the flush position, the system is operating normally. If the roof panel is not closed flush, REFER to Height Adjustment in this section. → **No** REPLACE the roof panel module. TEST the system for normal operation.

Official Licensed Product
Ford Motor Company

DIAGNOSIS AND TESTING (Continued)

PINPOINT TEST G: THE EXPRESS OPEN IS INOPERATIVE

TEST CONDITIONS	TEST DETAILS/RESULTS/ACTIONS
G1 CHECK SLIDING ROOF PANEL OPERATION	
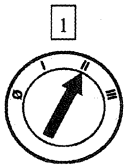	2 Press and hold the sliding roof panel switch to the OPEN position then hold in the CLOSE position. • Does the sliding roof panel open and close? → **Yes** GO to **G2**. → **No** GO to Pinpoint Test D.
G2 CHECK CIRCUIT (R) FOR VOLTAGE	
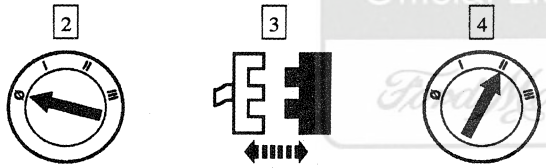 Sliding Roof Panel Motor Connector C913 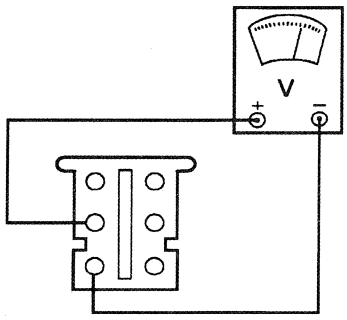 AR0600-A	1 Open the sliding roof panel halfway. 4 Measure the voltage between sliding roof panel motor connector Pin C913-4, Circuit (R) and Pin C913-2, Circuit (BK/W). • Is the voltage reading approximately 5 volts? → **Yes** GO to **G3**. → **No** GO to **G5**.

Official Licensed Product Ford Motor Company

(Continued)

DIAGNOSIS AND TESTING (Continued)

PINPOINT TEST G: THE EXPRESS OPEN IS INOPERATIVE (Continued)

TEST CONDITIONS	TEST DETAILS/RESULTS/ACTIONS
G3 CHECK CIRCUIT LIMIT SWITCH 2	
1 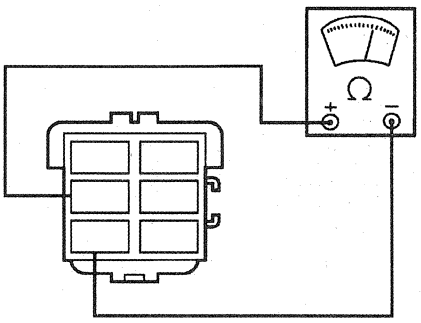 AR0601-A	1 Measure the resistance between sliding roof panel motor connector (motor side of connector) Pin C913-4, Circuit (R) and Pin C913-2, Circuit (BK/W). • Is the resistance reading 5 ohms or less? → **Yes** GO to **G4**. → **No** REPLACE the sliding roof panel motor. TEST the system for normal operation.
G4 CHECK LIMIT SWITCH 3	
1 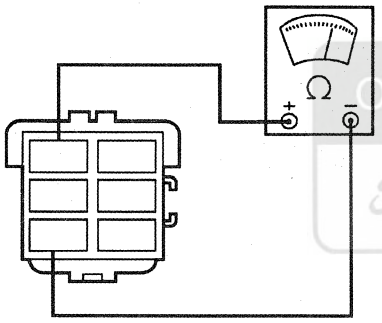 AR0602-A	1 Measure the resistance between sliding roof panel motor connector (motor side of the connector) Pin C913-6, Circuit (BK) and Pin C913-2, Circuit (BK/W). • Is the resistance reading 5 ohms or less? → **Yes** GO to **G7**. → **No** REPLACE the sliding roof panel motor. TEST the system for normal operation.

Official Licensed Product
Ford Motor Company

(Continued)

DIAGNOSIS AND TESTING (Continued)

PINPOINT TEST G: THE EXPRESS OPEN IS INOPERATIVE (Continued)

TEST CONDITIONS	TEST DETAILS/RESULTS/ACTIONS
G5 CHECK CIRCUIT (R) FOR A SHORT TO GROUND	
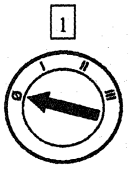 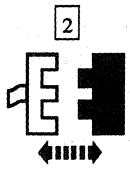 Sliding Roof Panel Module Connector C915 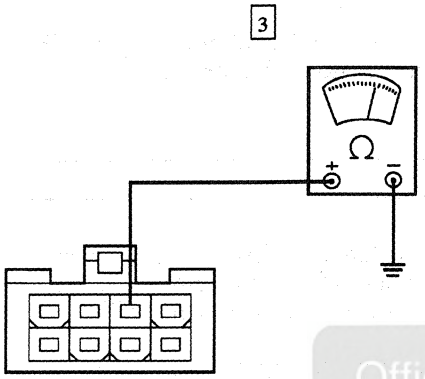 AR0603-A	3 Measure the resistance between sliding roof panel module connector Pin C915-7, Circuit (R) and ground. • Is the resistance reading 10 K ohms or less? → **Yes** REPAIR Circuit (R) for a short to ground. TEST the system for normal operation. → **No** GO to **G6**.
G6 CHECK CIRCUIT (BK) FOR A SHORT TO GROUND	
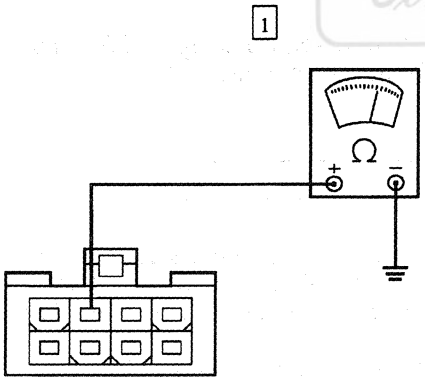 AR0604-A	1 Measure the resistance between sliding roof panel module connector Pin C915-6, Circuit (BK) and ground. • Is the resistance reading 10 K ohms or less? → **Yes** REPAIR Circuit (BK) for a short to ground. TEST the system for normal operation. → **No** GO to **G7**.

Official Licensed Product
Ford Motor Company

(Continued)

DIAGNOSIS AND TESTING (Continued)

PINPOINT TEST G: THE EXPRESS OPEN IS INOPERATIVE (Continued)

TEST CONDITIONS	TEST DETAILS/RESULTS/ACTIONS
G7 CHECK CIRCUIT (BK/W) FOR AN OPEN	
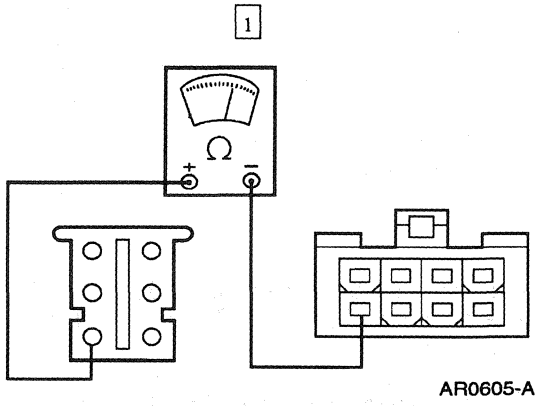	1 Measure the resistance of Circuit (BK/W) between sliding roof panel module connector Pin C915-1 and sliding roof panel motor connector Pin C913-2. • Is resistance reading 5 ohms or less? → **Yes** GO to **G8**. → **No** REPAIR Circuit (BK/W) for an open. TEST the system for normal operation.
G8 CHECK CIRCUIT (R) FOR AN OPEN	
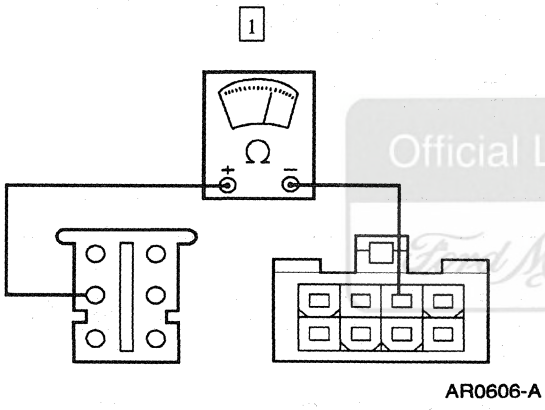	1 Measure the resistance of Circuit (R); between sliding roof panel module connector Pin C915-7 and sliding roof panel motor connector Pin C913-4. • Is the resistance reading 5 ohms or less? → **Yes** GO to **G9**. → **No** REPAIR Circuit (R) for an open. TEST the system for normal operation.
G9 CHECK CIRCUIT (BK) FOR AN OPEN	
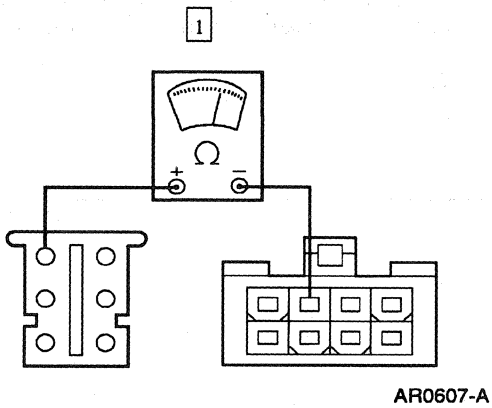	1 Measure the resistance of Circuit (BK) between sliding roof panel module connector Pin C915-6 and sliding roof panel motor connector Pin C913-6. • Is the resistance reading 5 ohms or less? → **Yes** REPLACE the sliding roof panel module. TEST the system for normal operation. → **No** REPAIR Circuit (BK) for an open. TEST the system for normal operation.

Official Licensed Product Ford Motor Company

DIAGNOSIS AND TESTING (Continued)

PINPOINT TEST H: THE SLIDING ROOF PANEL WILL NOT SLIDE CLOSED OR WILL NOT VENT UP

TEST CONDITIONS	TEST DETAILS/RESULTS/ACTIONS
H1 CHECK THE SLIDING ROOF PANEL SWITCH INPUT	
1 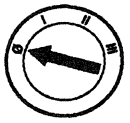 2 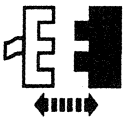 Sliding Roof Panel Module Connector C915	
3 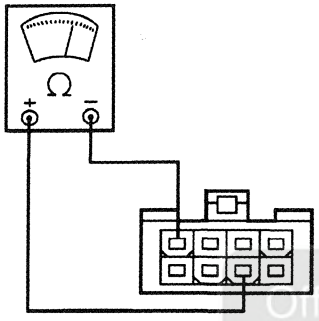 AR0355-B	3 Measure the resistance between sliding roof panel module connector Pin C915-5, Circuit (T/R) and Pin C915-3, Circuit (BK/O).
4 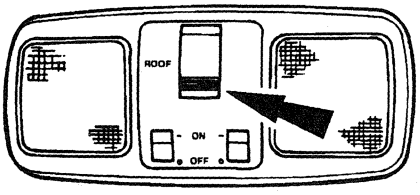 AR0379-A	4 Press the roof sliding panel switch to the CLOSE position while monitoring the ohmmeter. • Is the resistance reading 5 ohms or less when the roof sliding panel switch is in the CLOSE position? → **Yes** GO to **H4**. → **No** GO to **H2**.

Official Licensed Product
Ford Motor Company

(Continued)

DIAGNOSIS AND TESTING (Continued)

PINPOINT TEST H: THE SLIDING ROOF PANEL WILL NOT SLIDE CLOSED OR WILL NOT VENT UP (Continued)

TEST CONDITIONS	TEST DETAILS/RESULTS/ACTIONS
H2 CHECK CIRCUIT 1175 (T/R) AND CIRCUIT (T/R) FOR A SHORT TO B+	
1 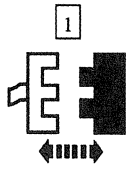 Sliding Roof Panel Switch Connector C904 2 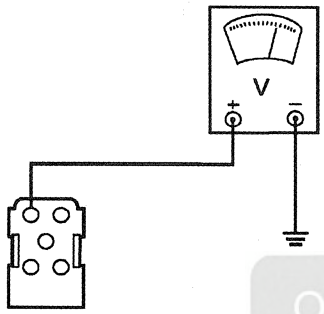 AR0370-B	2 Measure the voltage at sliding roof panel switch connector Pin C904-4, Circuit 1175 (T/R). • Is the voltage reading 0 volts? → **Yes** GO to **H3**. → **No** REPAIR Circuit 1175 (T/R) or Circuit (T/R) for a short to B+. TEST the system for normal operation.
H3 CHECK CIRCUIT 1175 (T/R) OR CIRCUIT (T/R) FOR AN OPEN	
1 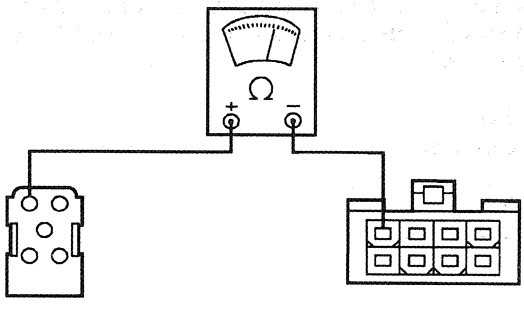 AR0371-B	1 Measure the resistance between sliding roof panel switch connector Pin C904-4, Circuit 1175 (T/R) and sliding roof panel module connector Pin C915-5, Circuit (T/R). • Is the resistance reading 5 ohms or less? → **Yes** REPLACE the roof sliding panel switch. TEST the system for normal operation. → **No** REPAIR Circuit 1175 (T/R) or Circuit (T/R) for an open. TEST the system for normal operation.

(Continued)

Official Licensed Product
Ford Motor Company

DIAGNOSIS AND TESTING (Continued)

PINPOINT TEST H: THE SLIDING ROOF PANEL WILL NOT SLIDE CLOSED OR WILL NOT VENT UP (Continued)

TEST CONDITIONS	TEST DETAILS/RESULTS/ACTIONS
H4 CHECK SLIDING ROOF PANEL MODULE	
1 Sliding Roof Panel Module Connector C915 2 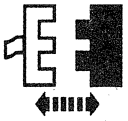 Sliding Roof Panel Module Connector C913 3 4 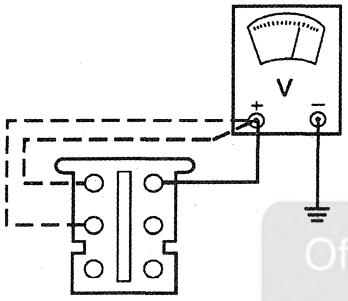 AR0756-A	4 Measure the voltage at sliding roof panel motor connector Pin C913-5, Circuit (W), then Pin C913-4, Circuit (R), then Pin C913-6, Circuit (BK). • Is the voltage reading 9 volts on all three circuits? → **Yes** REPLACE the sliding roof panel module. TEST the system for normal operation. → **No** REPLACE the sliding roof panel motor. TEST the system for normal operation.

Official Licensed Product
Ford Motor Company

DIAGNOSIS AND TESTING (Continued)

PINPOINT TEST J: THE SLIDING ROOF PANEL WILL NOT SLIDE OPEN OR WILL NOT CLOSE FROM THE VENT POSITION

TEST CONDITIONS	TEST DETAILS/RESULTS/ACTIONS
J1 CHECK THE SLIDING ROOF PANEL SWITCH INPUT	
1 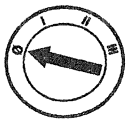 2 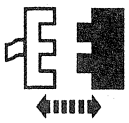 Sliding Roof Panel Module Connector C915	
3 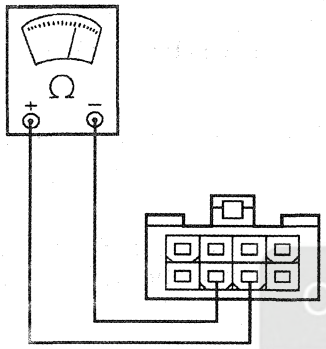 AR0369-B	3 Measure the resistance between sliding roof panel module connector Pin C915-3, Circuit (BR/O) and Pin C915-2, Circuit (W/R).
4 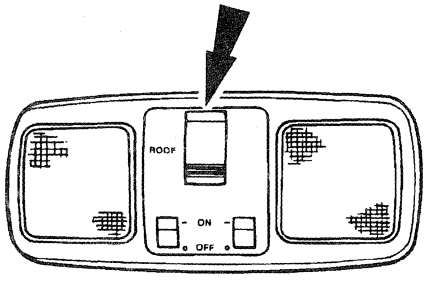 AR0378-A	4 Press the roof sliding panel switch to the OPEN position while monitoring the ohmmeter. • Is the resistance reading 100 ohms or less when the roof sliding panel switch is in the OPEN position? → **Yes** GO to **J4**. → **No** GO to **J2**.

(Continued)

Official Licensed Product
Ford Motor Company

DIAGNOSIS AND TESTING (Continued)

PINPOINT TEST J: THE SLIDING ROOF PANEL WILL NOT SLIDE OPEN OR WILL NOT CLOSE FROM THE VENT POSITION (Continued)

TEST CONDITIONS	TEST DETAILS/RESULTS/ACTIONS
J2 CHECK CIRCUIT 1174 (W/R) AND CIRCUIT (W/R) FOR A SHORT TO B+	
1 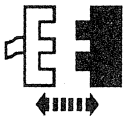 Sliding Roof Panel Switch Connector C904 2 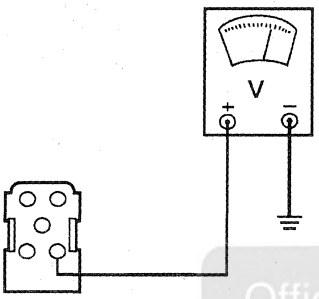 AR0372-B	2 Measure the voltage at sliding roof panel switch connector Pin C904-2, Circuit 1174 (W/R). • Is the voltage reading 0 volts? → **Yes** GO to **J3**. → **No** REPAIR Circuit 1174 (W/R) or Circuit (W/R) for a short to B+. TEST the system for normal operation.
J3 CHECK CIRCUIT 1174 (W/R) AND CIRCUIT (W/R) FOR AN OPEN	
1 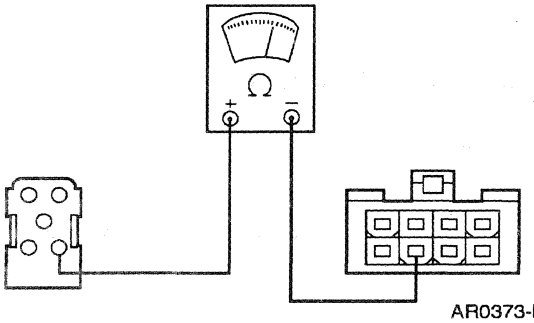 AR0373-B	1 Measure the resistance between sliding roof panel switch connector Pin C904-2, Circuit 1174 (W/R) and sliding roof panel module connector Pin C915-2, Circuit (W/R). • Is the resistance reading 5 ohms or less? → **Yes** REPLACE the roof sliding panel switch. TEST the system for normal operation. → **No** REPAIR Circuit 1174 (W/R) or Circuit (W/R) for an open. TEST the system for normal operation.

Official Licensed Product
Ford Motor Company

(Continued)

DIAGNOSIS AND TESTING (Continued)

PINPOINT TEST J: THE SLIDING ROOF PANEL WILL NOT SLIDE OPEN OR WILL NOT CLOSE FROM THE VENT POSITION (Continued)

TEST CONDITIONS	TEST DETAILS/RESULTS/ACTIONS
J4 CHECK SLIDING ROOF PANEL MODULE	
1 Sliding Roof Panel Module Connector C915 2 Sliding Roof Panel Module Connector C913 3 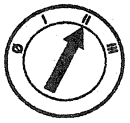 4 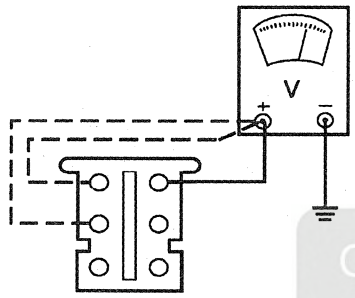 AR0756-A	4 Measure the voltage at sliding roof panel motor connector Pin C913-5, Circuit (W), then Pin C913-4, Circuit (R), then Pin C913-6, Circuit (BK). • Is the voltage reading 0 volts on all three circuits? → **Yes** REPLACE the sliding roof panel module. TEST the system for normal operation. → **No** REPLACE the sliding roof panel motor. TEST the system for normal operation.

Official Licensed Product
Ford Motor Company

REMOVAL AND INSTALLATION

Panel — Roof Sliding

Removal

1. Remove the roof headlining (51916); refer to Section 501-05.

2. Disconnect the drain tubes attached to each corner.

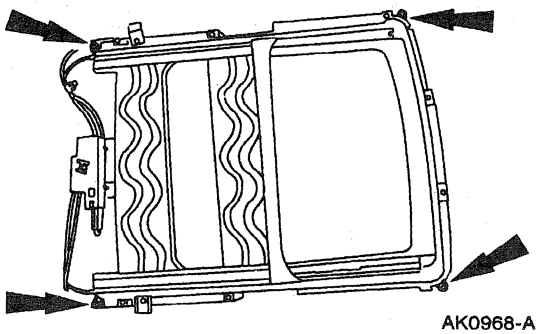
AK0968-A

REMOVAL AND INSTALLATION (Continued)

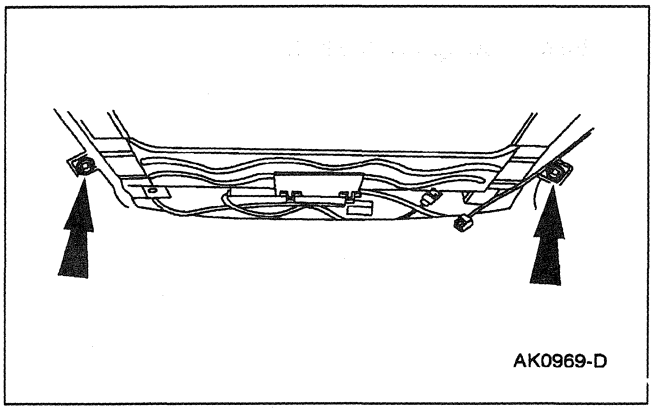

3. Remove the bolts.

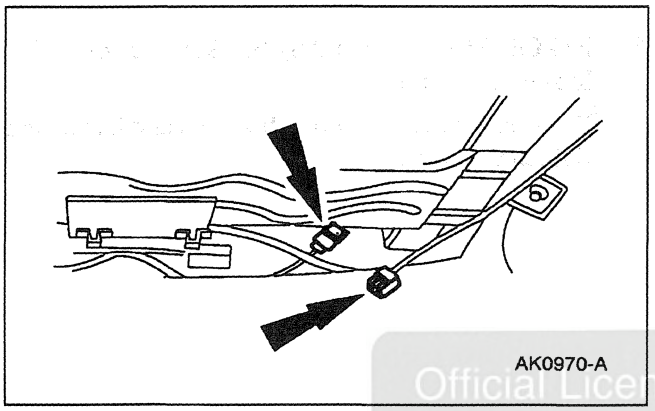

4. Disconnect the body wire harness connector.

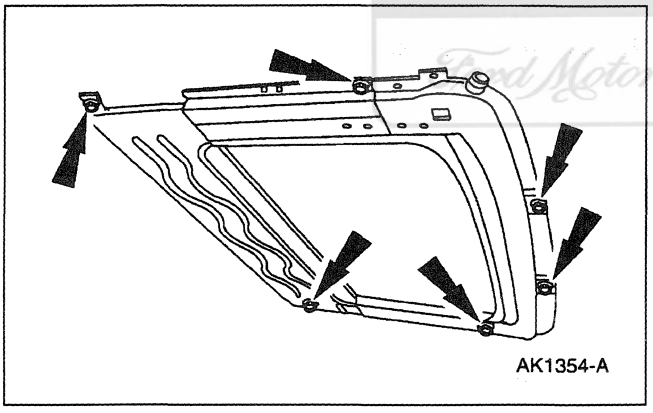

5. **NOTE:** Support the roof panel (502B98) to prevent the unit from dropping.
   Remove the bolts.

6. Remove the roof panel.

Installation

1. Position the roof panel.

Official Licensed Product
Ford Motor Company

REMOVAL AND INSTALLATION (Continued)

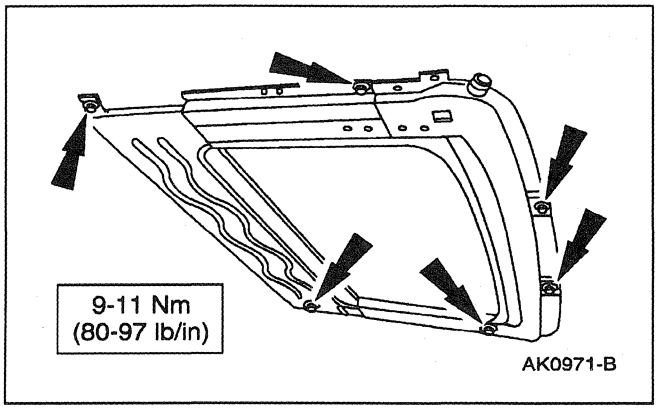

2. Install and tighten the bolts.

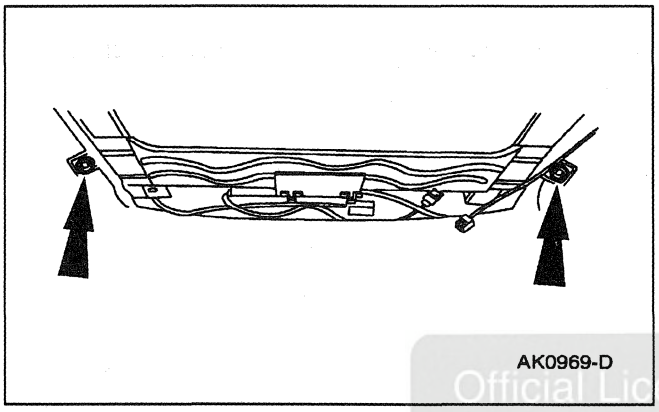

3. **NOTE:** The rear mounting brackets are shipped loosely assembled.

   Position the rear mounting brackets and install and tighten the bolts.

Official Licensed Product
Ford Motor Company

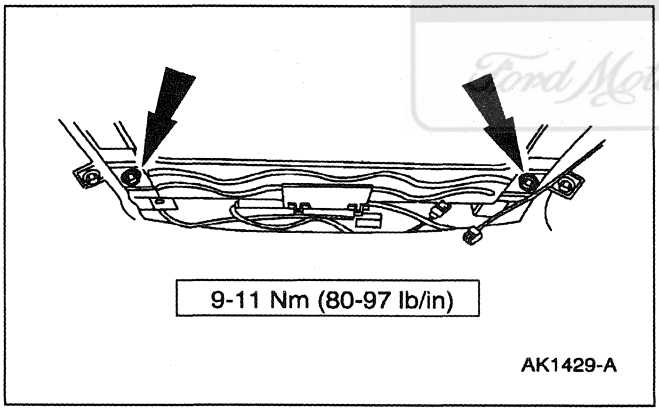

4. Tighten the bolts.

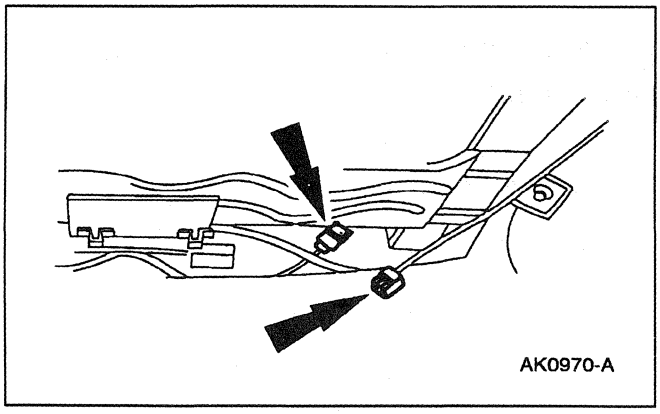

5. Connect the body wire harness connector.

REMOVAL AND INSTALLATION (Continued)

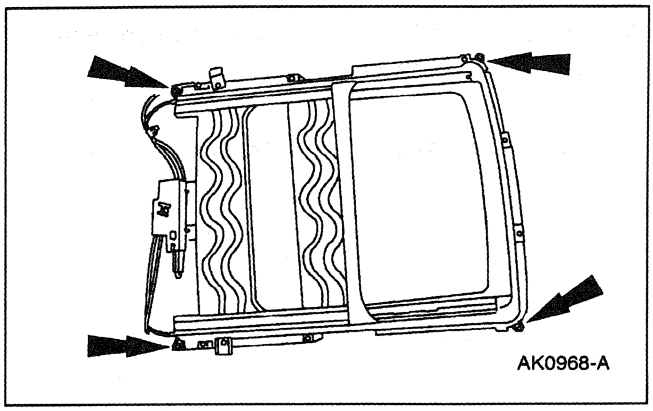

6. Connect the drain tubes to each corner.

7. Install the roof headlining; refer to Section 501-05.

Glass — Roof Sliding Outer Panel

Removal

Official Licensed Product
Ford Motor Company

1. Operate the roof opening glass (500A18) to the flush position.

2. Swing the LH sight shield and the RH sight shield inboard and rearward.
   1 Unclip the front of the sight shield.

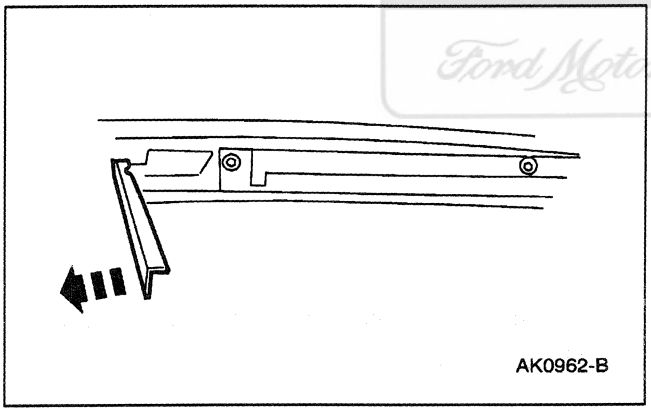

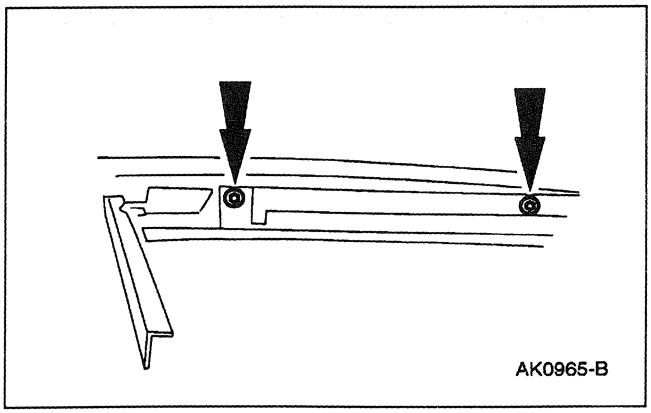

3. Remove the two screws on each side.

REMOVAL AND INSTALLATION (Continued)

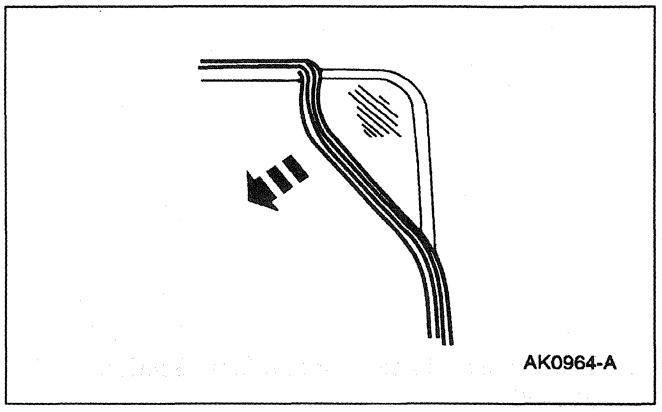

4. From outside the vehicle, lift the roof opening glass from the vehicle.
5. Remove the roof sliding panel seal (51884).

Installation

1. Clean the old adhesive from the glass and the frame.

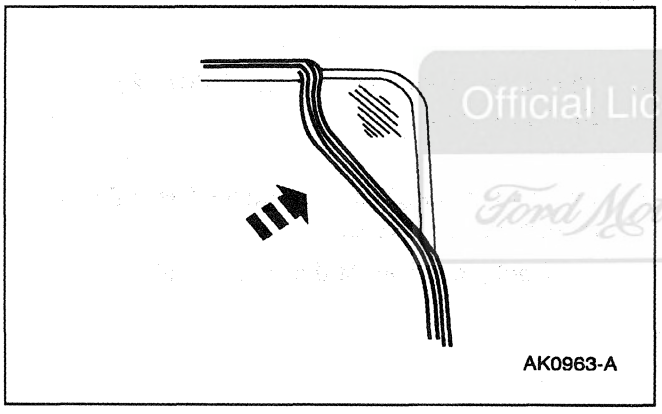

2. Install a new roof sliding panel seal.

Official Licensed Product
Ford Motor Company

3. Position the roof opening glass to the roof sliding panel housing.

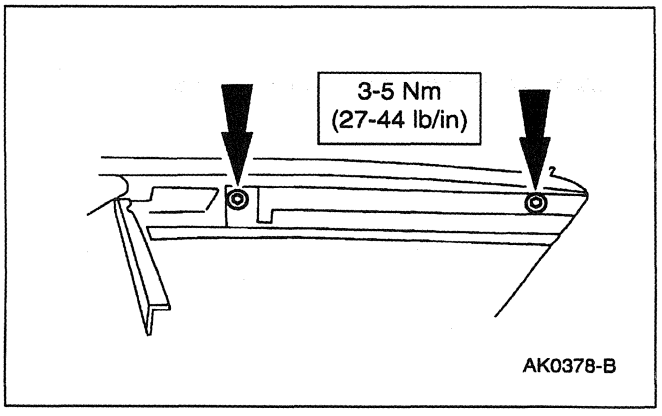

4. Install and tighten the two screws on each side.

REMOVAL AND INSTALLATION (Continued)

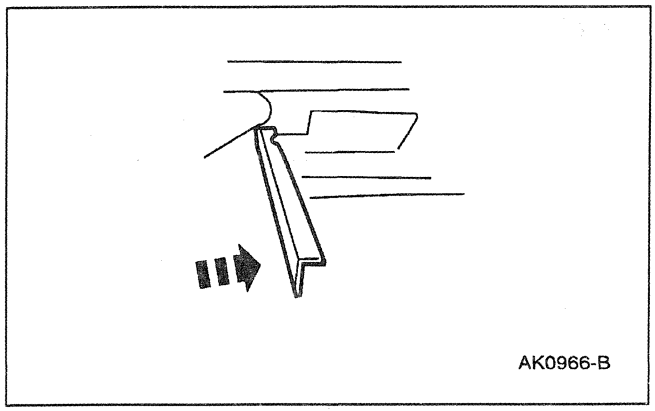

5. Install the LH and the RH sight shields.

Opening Shield — Roof Sliding Panel

Removal

1. Remove the roof opening glass (500A18); refer to Glass—Roof Sliding Outer Panel in this section.
2. Remove the trough; refer to Trough Assembly in this section.
3. Pull the roof sliding panel opening shield (50988) forward.

Official Licensed Product
Ford Motor Company

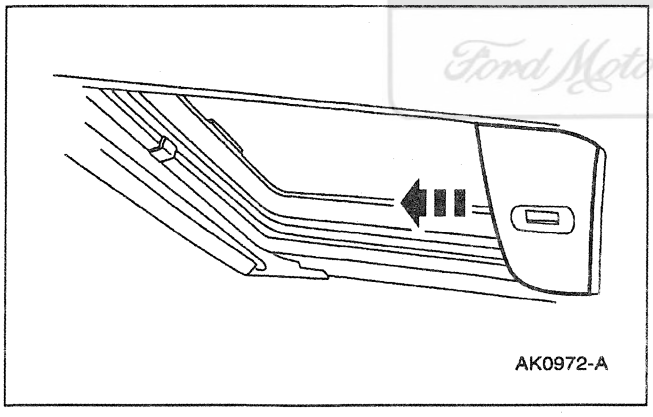

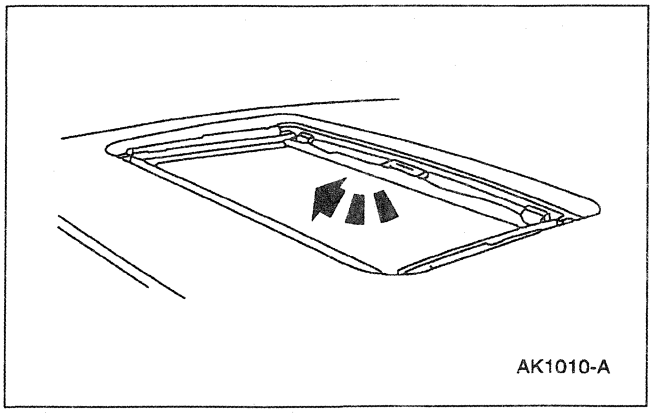

4. **NOTE:** Gently flex the roof sliding panel opening shield to disengage it from the track.

   Remove the roof sliding panel opening shield.

   - Remove and pull the roof sliding panel opening shield forward and upward.
   - Pull the roof sliding panel opening shield through the roof opening.

REMOVAL AND INSTALLATION (Continued)

Installation

1. Follow the removal procedure in reverse order.

Motor

Removal

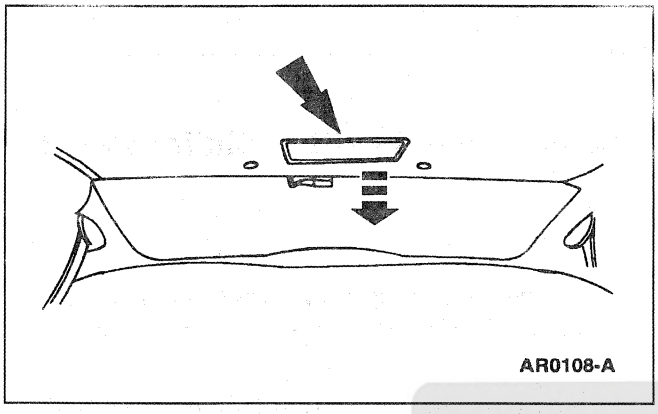
AR0108-A

1. Remove the roof headlining access hole cover (52076).

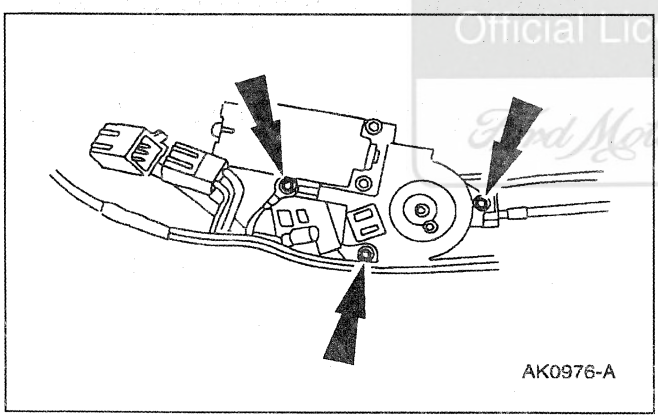
AK0976-A

2. Remove the three Torx® screws to disengage the motor from the tracer assembly.

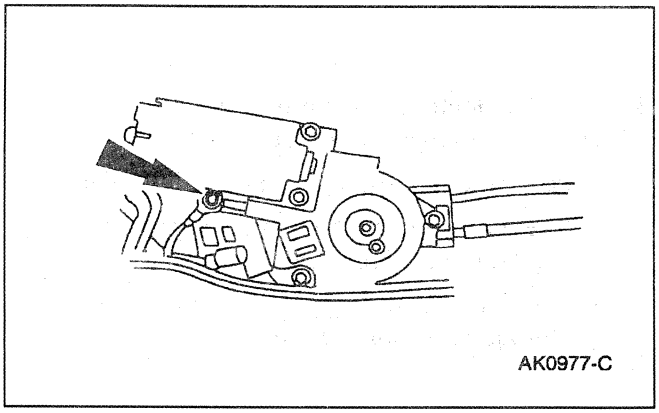
AK0977-C

3. **NOTE:** The ground wire must be reinstalled exactly from where it was removed.
   Remove the ground wire.

4. Remove the sliding roof panel motor (15790) and lower the sliding roof panel motor through the access hole.

Official Licensed Product
Ford Motor Company

REMOVAL AND INSTALLATION (Continued)

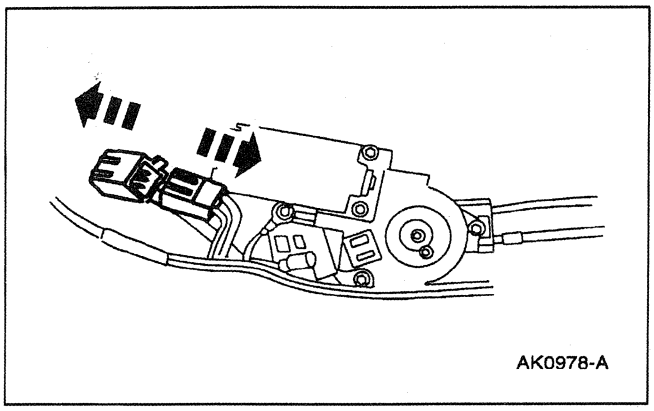

5. Disconnect the electrical connector.

Installation

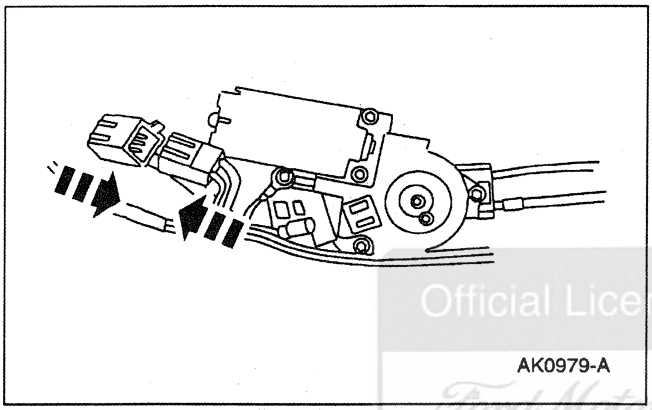

1. Connect the electrical connector to the sliding roof panel motor.

Official Licensed Product
Ford Motor Company

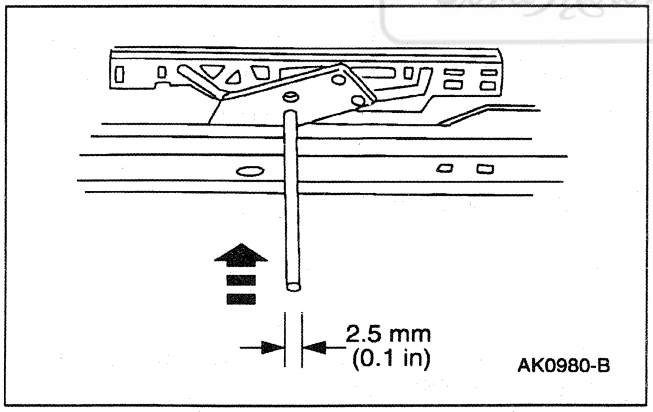

2. **NOTE:** The lifter mechanism should be all the way forward and latched over the spring.

   Insert a 2.5 mm dowel pin on each side of the lifter mechanism timing hole. The dowel pin should reach through the outboard metal link and partially into the lifter mechanism.

   - Move the outboard metal link to align, if necessary.

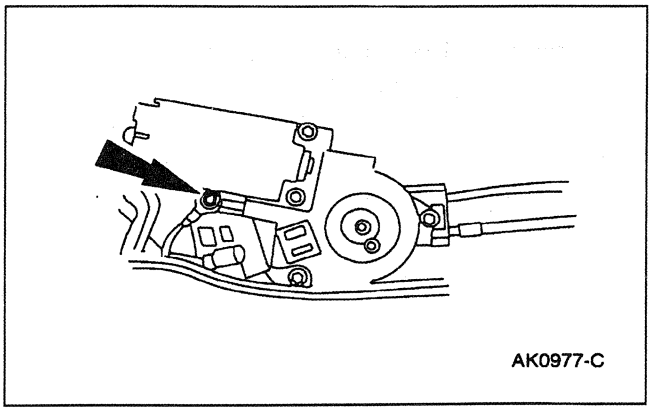

3. ⚠ **CAUTION: The sliding roof panel motor must be installed carefully, straight up, into position. Installing the sliding roof panel motor at an angle may damage the motor mechanism.**

   Install the sliding roof panel motor.

   1 Attach the ground wire to the proper location.

REMOVAL AND INSTALLATION (Continued)

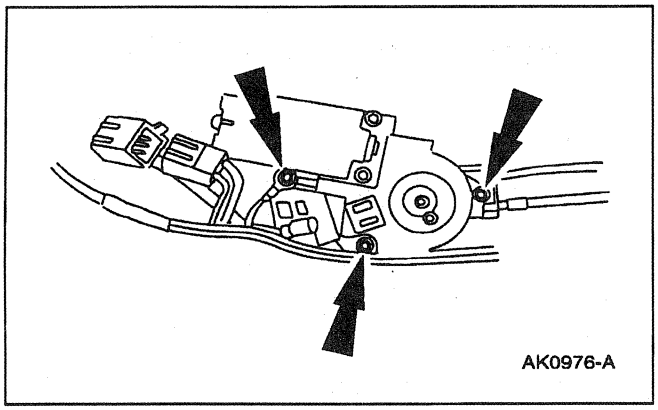

4. Install the screws and the sliding roof panel motor.

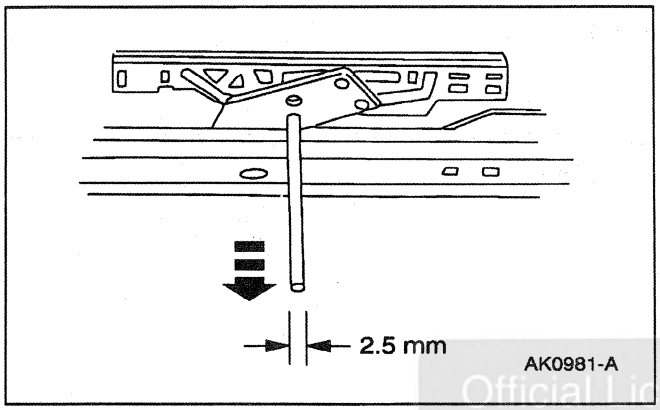

5. Remove the 2.5 mm dowel.

Official Licensed Product
Ford Motor Company

6. Reattach the roof headlining access hole cover.
7. Install the roof opening glass (500A18); refer to Glass—Roof Sliding Outer Panel in this section.

Trough Assembly

Removal

1. Remove the roof opening glass (500A18); refer to Glass—Roof Sliding Outer Panel in this section.

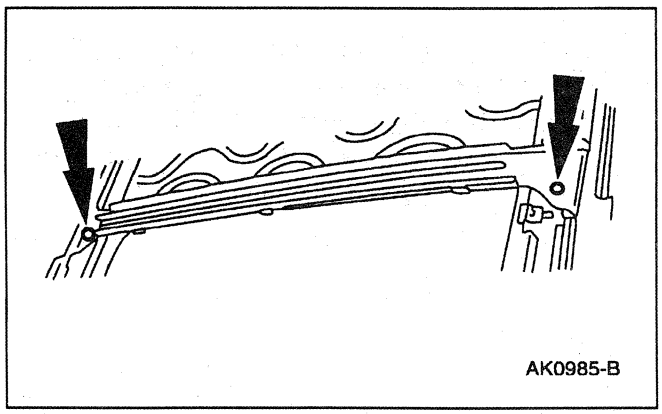

2. Remove the LH and the RH screws and remove the trough assembly.

REMOVAL AND INSTALLATION (Continued)

Installation

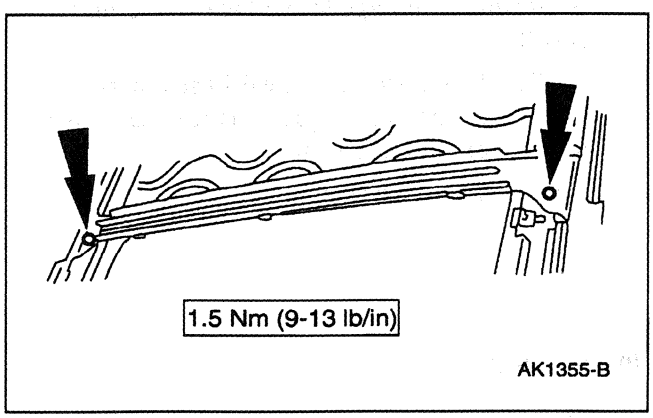

1. **NOTE:** Make sure the rear edge of the trough is engaged under the trough guide.

   Install the trough.

   1 Install the trough assembly downward onto the LH and the RH guides and install the screws.

2. Install the roof opening glass; refer to Glass—Roof Sliding Outer Panel in this section.

Air Deflector

Removal

Official Licensed Product
Ford Motor Company

1. Cycle the roof opening glass (500A18) to the open position.
2. Unsnap the two stop pieces.
3. Swing the roof air deflector (500A26) up.
4. Remove the sliding roof panel headlining retainer (52124).
5. Block the headliner down.

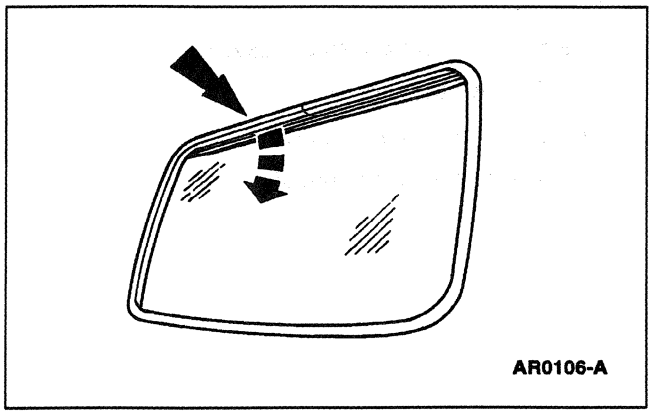

REMOVAL AND INSTALLATION (Continued)

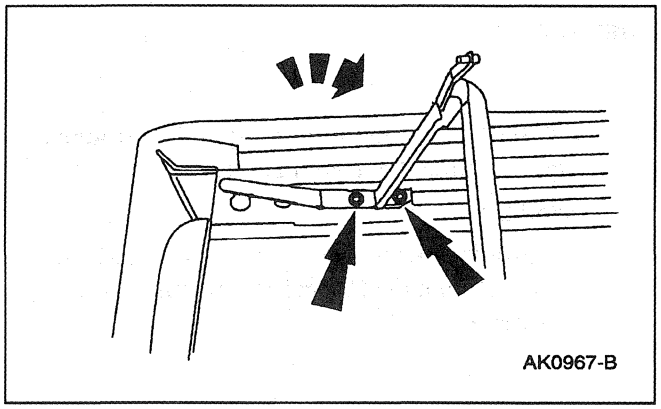

6. ⚠ **CAUTION: Do not drill into the headlining. Damage to the headlining may result.**

   NOTE: Be sure to catch the drill shavings or remove the drill shavings from the headlining to avoid later rattle problems.

   Remove the four rivets.

Installation

1. Follow the removal procedure in reverse order.

Switch

Removal

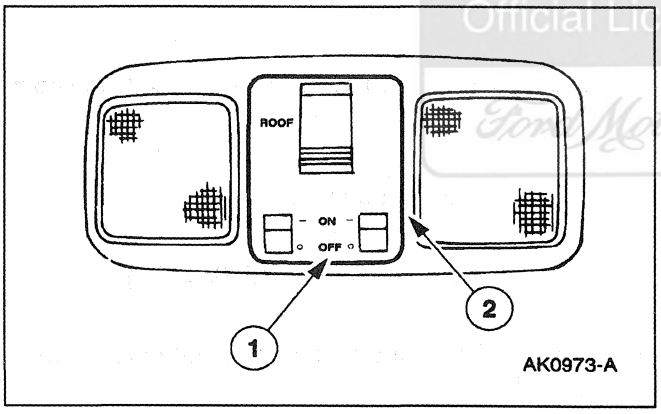

1. Remove the switch plate bezel.
   1 Insert a pry tool into the front edge of bezel.
   2 Remove the switch plate bezel.

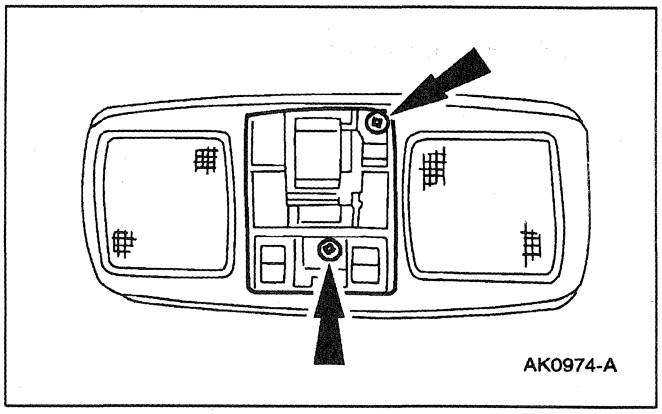

2. Remove the roof console (519A58).
   - Remove the screws.
   - Lower the roof console.
   - Remove the roof console.

Official Licensed Product
Ford Motor Company

REMOVAL AND INSTALLATION (Continued)

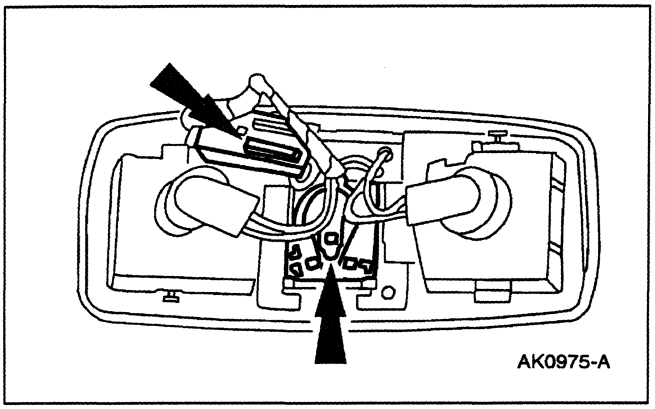

3. Disconnect the switch and the wiring connectors from the roof console.

Installation

1. Follow the removal procedure in reverse order.

Control Module

Removal

Official Licensed Product
Ford Motor Company

1. Operate the roof opening glass (500A18) to the flush position.

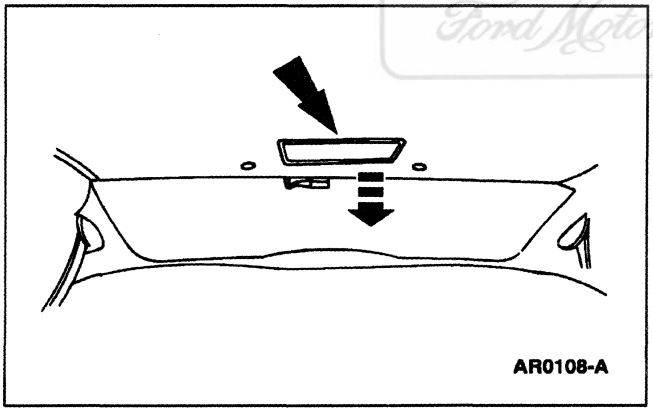

2. Remove the roof headlining access hole cover (52076).

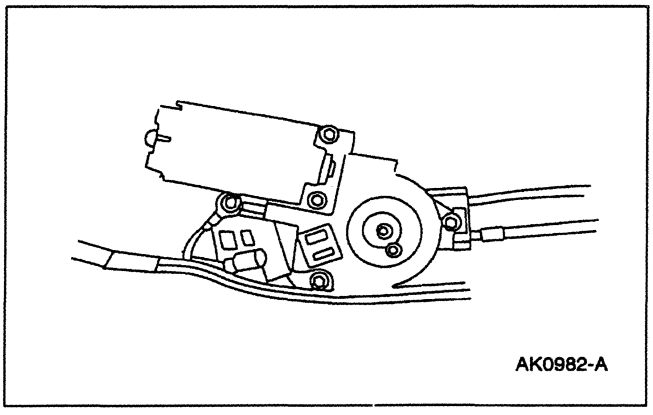

3. Slide the control module from the retaining bracket.

REMOVAL AND INSTALLATION (Continued)

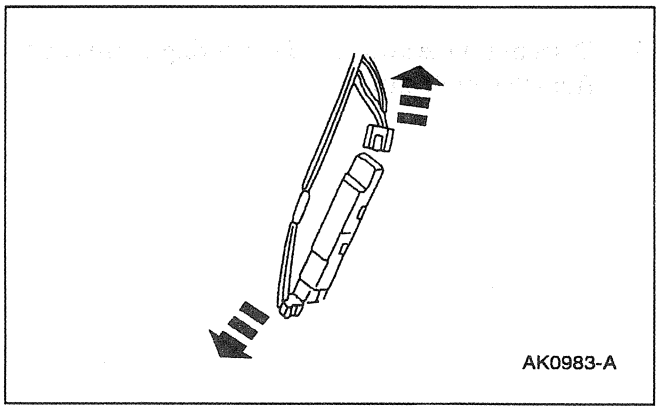

4. Remove the control module.

Installation

1. Follow the removal procedure in reverse order.

Control Module — Wire Harness

Removal

Official Licensed Product
Ford Motor Company

1. Operate the roof opening glass (500A18) to the flush position.
2. Remove the headliner roof trim panel (51968); refer to Section 501-05.

REMOVAL AND INSTALLATION (Continued)

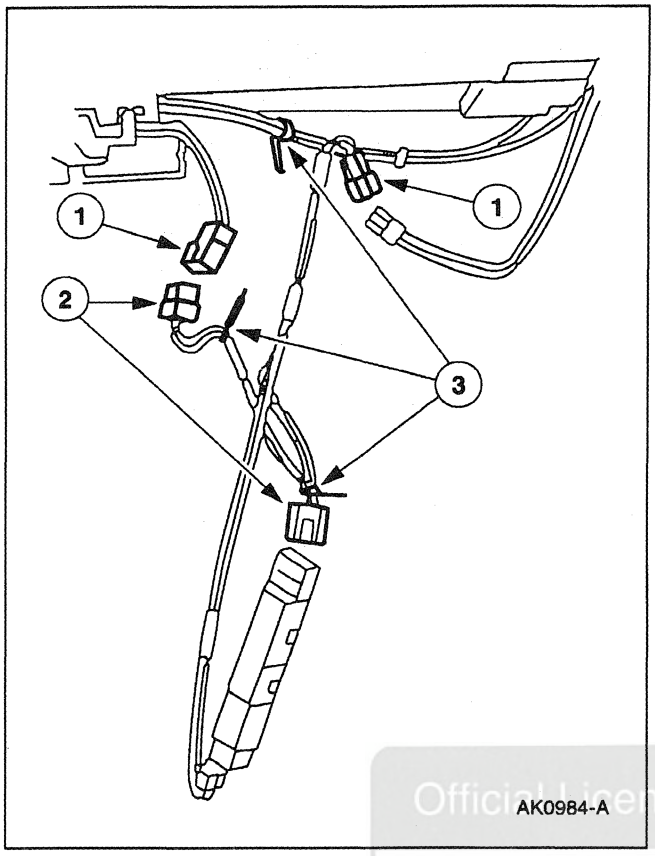

3. Remove the wire harness.
   1 Disconnect the body harness from the wire harness.
   2 Disconnect the motor harness connector.
   3 Cut the clip tie on harness to the control module.

Official Licensed Product
Ford Motor Company

Installation

1. Follow the removal procedure in reverse order.

GENERAL PROCEDURES

Height Adjustment

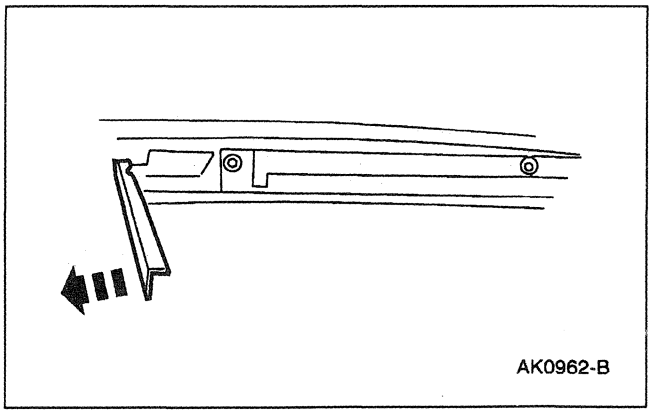

1. Swing the LH and the RH sight shields rearward and unclip the front.

GENERAL PROCEDURES (Continued)

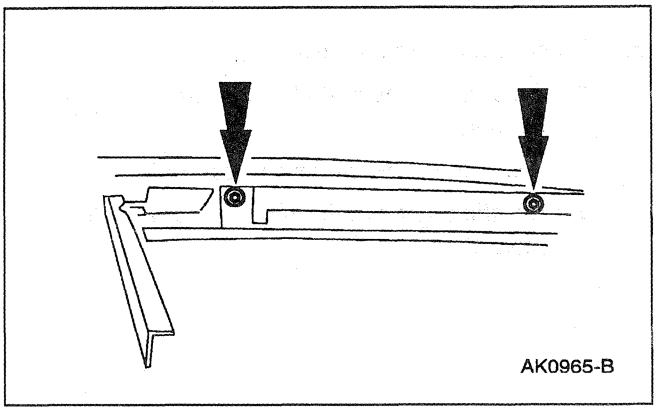

2. Loosen the LH and the RH Torx® screws.

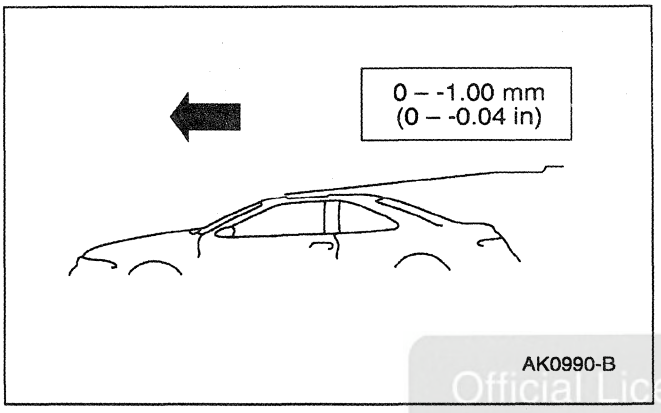

3. Adjust the front glass edge to flush 1.00 mm (0.04 inch) low.

Official Licensed Product
Ford Motor Company

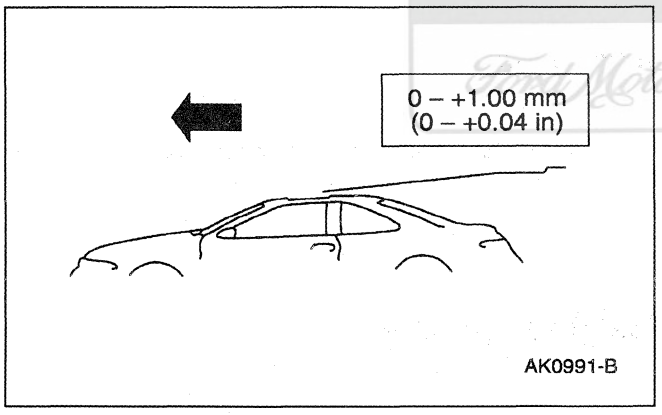

4. Adjust the rear glass edge to flush 1.00 mm (0.04 inch) high.

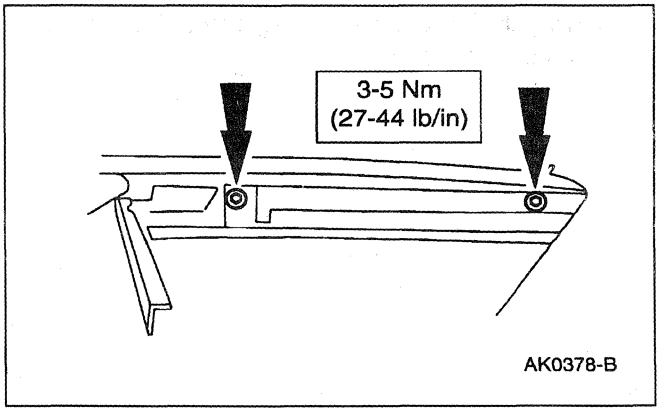

5. Tighten the LH and the RH Torx® screws.

GENERAL PROCEDURES (Continued)

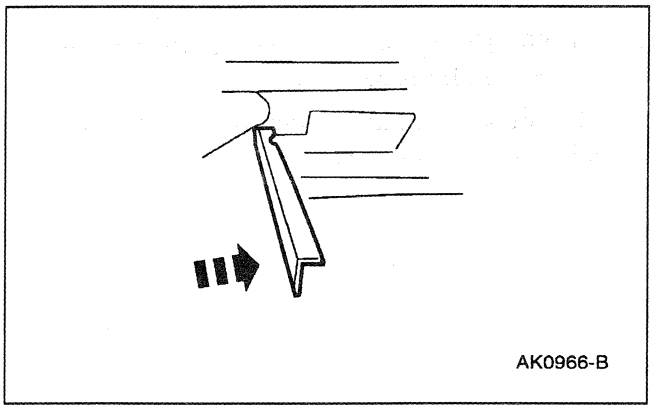

6. Install the LH and the RH sight shields.

Motor Synchronization

1. Operate the roof opening glass to the flush position.

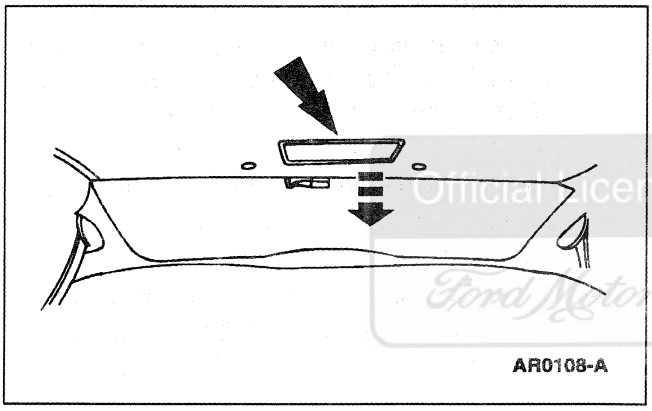

2. Remove the roof headlining access hole cover (52076).

Official Licensed Product
Ford Motor Company

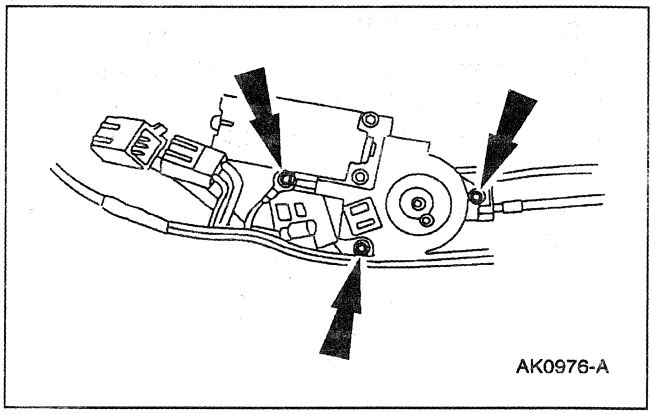

3. **NOTE:** The ground wire must be installed in the same position on installation.

   Remove the screws and the roof sliding panel motor. Do not disconnect the connector.

4. Operate the roof sliding panel switch (15B691) until the roof sliding panel motor is shut off by the micro switch.

GENERAL PROCEDURES (Continued)

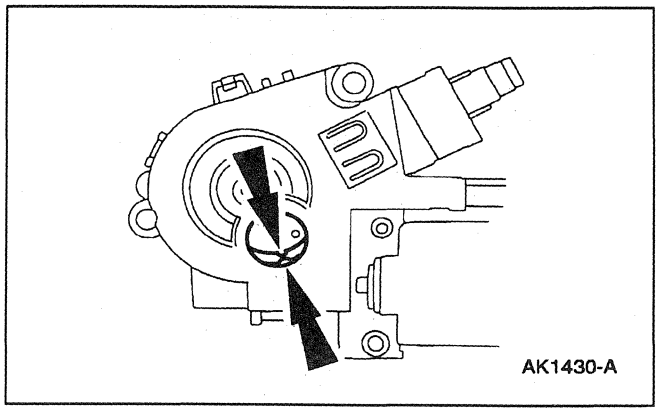

5. **NOTE:** Timing tabs are located in the window on the roof sliding panel motor.

   Check that the white and gray timing tabs are aligned in the window.

6. If the motor is not synchronized, adjust as follows:
   - If it is disconnected, connect the battery ground cable (14301).
   - Connect the sliding roof panel motor wiring connector to roof panel wiring connector.
   - Operate the roof sliding panel switch advance the sliding roof panel motor drive gear until the white timing tab on the gear and the gray timing tab on the motor are aligned.
   - Disconnect the sliding roof panel motor wiring connector from the roof panel wiring connector.
   - From the retracted position, crank the roof sliding outer glass panel (502A82) flush with the roof.

Official Licensed Product
Ford Motor Company

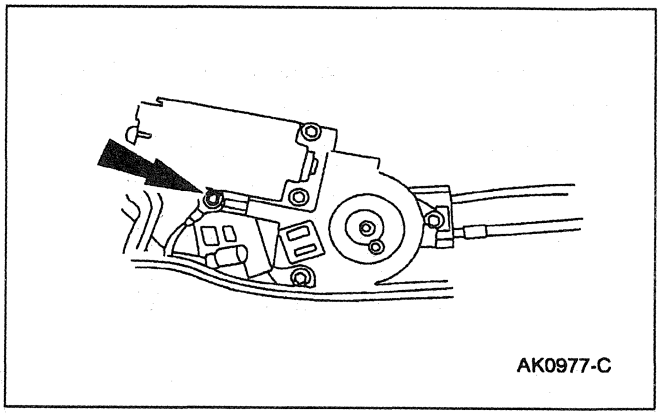

7. **CAUTION: The sliding roof panel motor (15790) must be installed carefully straight up into position. Installing the sliding roof panel motor at an angle may damage the motor mechanism.**

   Install the sliding roof panel motor; refer to Motor in this section.

8. Install the roof headlining access hole cover.

SPECIFICATIONS

Torque Specifications

Description	Nm	Lb/In
Roof Sliding Outer Glass Panel Retaining Screws	3-5	27-44
Roof Sliding Panel Rail Retaining Bolts	9-11	80-97

(Continued)

Torque Specifications

Description	Nm	Lb/In
Motor Retaining Bolts	4-6	36-53
Trough Retaining Screws	1.0-1.5	9-13
Rear Mounting Bracket Bolts	9-11	80-97

Official Licensed Product
Ford Motor Company

SECTION 501-19 Bumpers

VEHICLE APPLICATION: Mark VIII

SUBJECT **PAGE**

DESCRIPTION AND OPERATION
Bumpers 501-19-2
REMOVAL AND INSTALLATION
Bumper — Front 501-19-3
Bumper — Rear 501-19-9
SPECIFICATIONS 501-19-15

Official Licensed Product
Ford Motor Company

DESCRIPTION AND OPERATION

Bumpers

Component Location

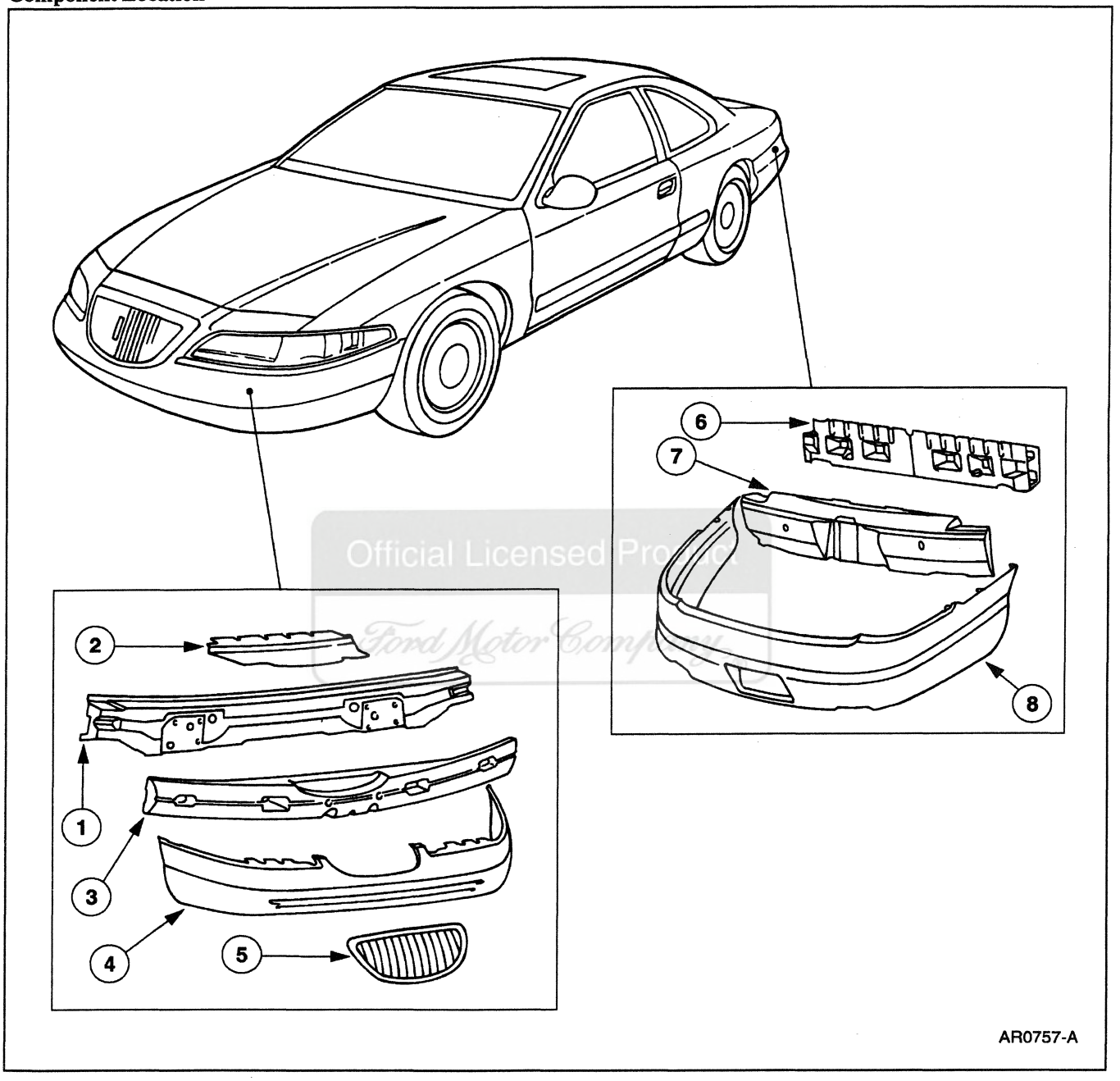

Item	Part Number	Description
1	17757	Front Bumper
2	—	Grille Opening Sight Shield
3	17C947	Front Bumper Cover Support
4	17D957	Front Bumper Cover

Item	Part Number	Description
5	8200	Radiator Grille
6	17906	Rear Bumper
7	17787	Rear Bumper Isolator
8	17K835	Rear Bumper Cover

(Continued)

REMOVAL AND INSTALLATION

Bumper — Front

Removal

NOTE: The radiator grille (8200) and the front bumper cover (17D957) are removed from the vehicle as a unit.

1. Remove the radiator upper sight shield (8C291).

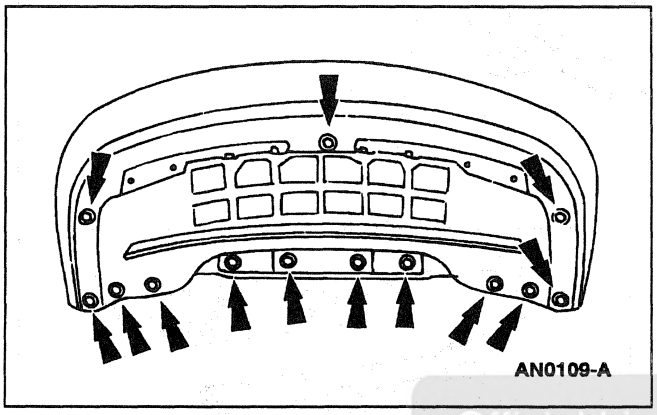

2. Remove the screws and the front valance panel (17626).

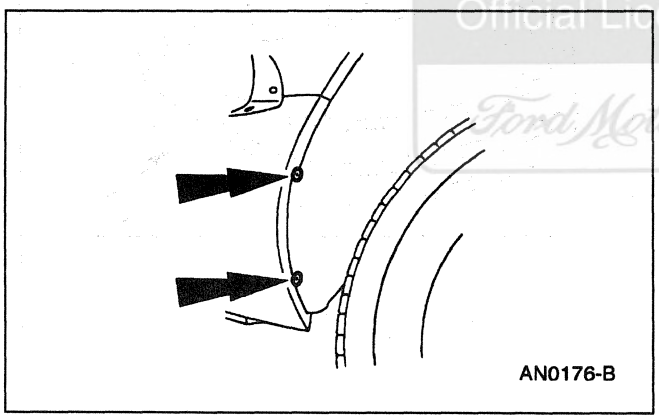

3. Remove the screws.

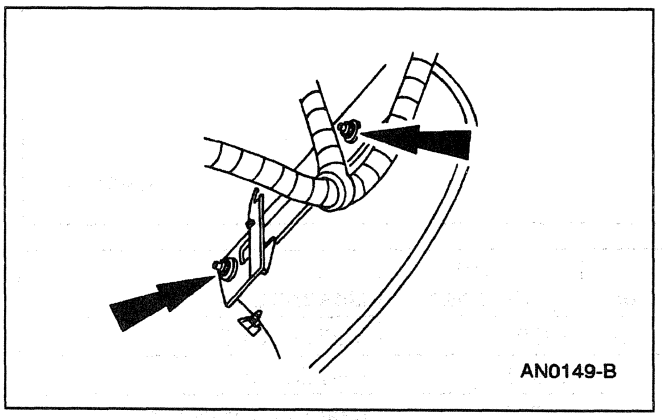

4. Remove the four front bumper cover nuts from inside both sides of the front bumper cover.

Official Licensed Product
Ford Motor Company

REMOVAL AND INSTALLATION (Continued)

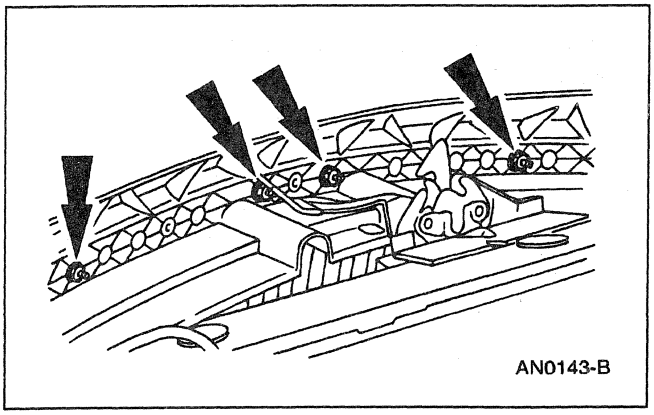

5. Remove the nuts from the grille opening panel.

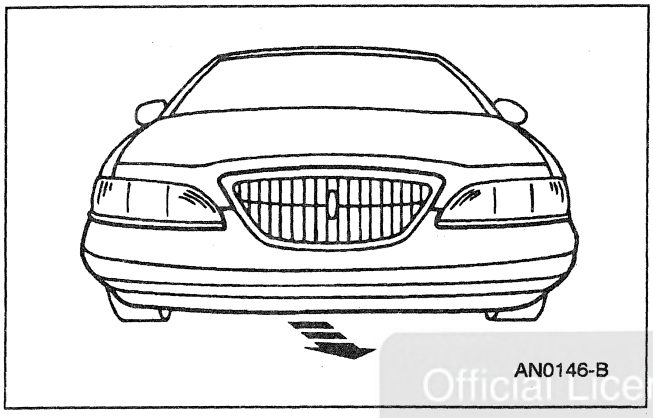

6. Remove the front bumper cover and the radiator grille.

Official Licensed Product
Ford Motor Company

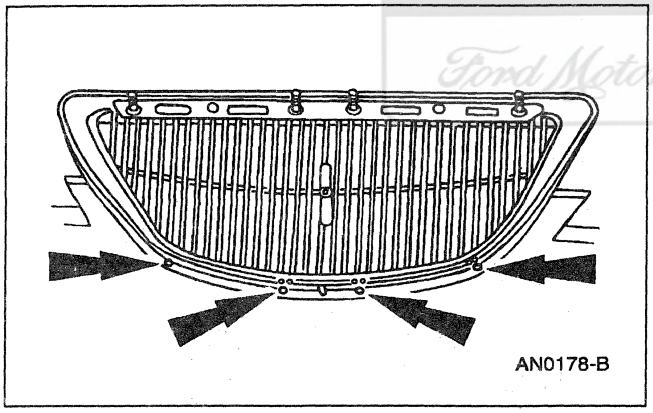

7. Remove the screws and the radiator grille.

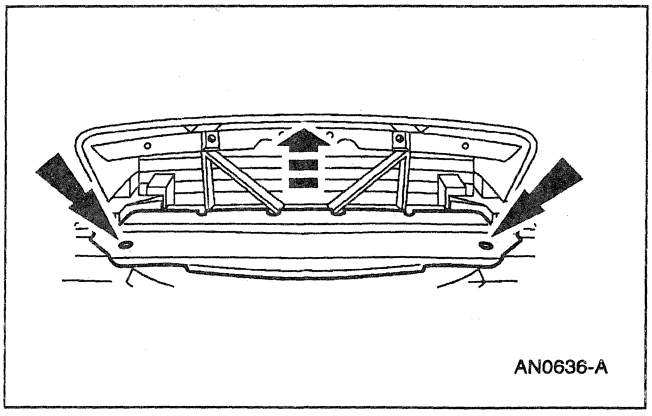

8. Remove the pushpins and the grille opening sight shield.

REMOVAL AND INSTALLATION (Continued)

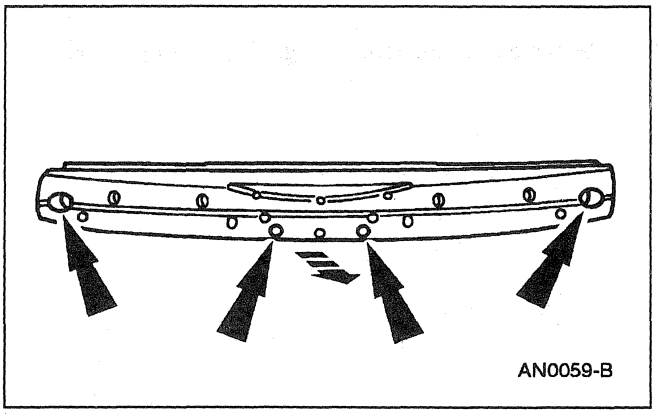

9. Remove the rivets and the front bumper cover support (17C947).

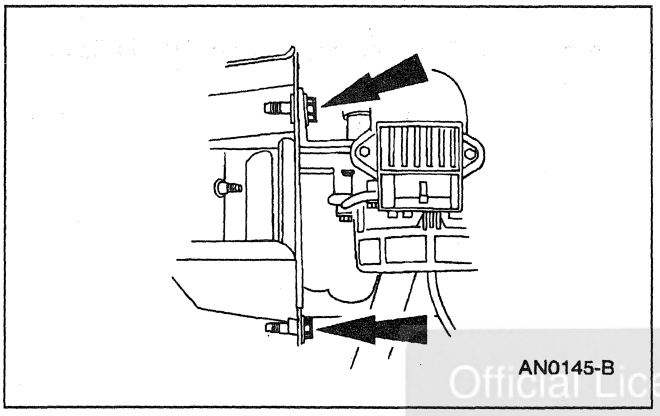

10. Remove the secondary air injection pump bracket bolts.

Official Licensed Product
Ford Motor Company

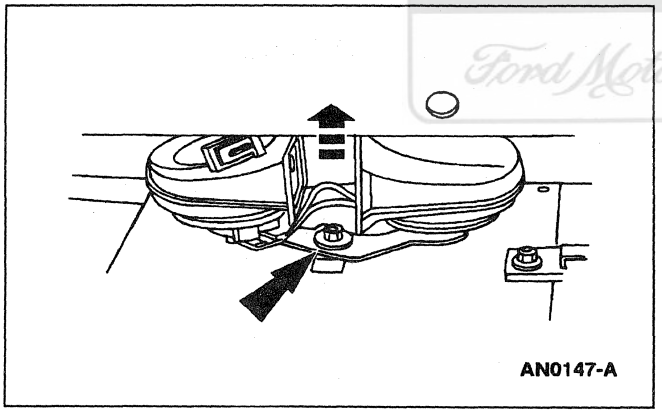

11. Remove the horn bracket screw and the horns.

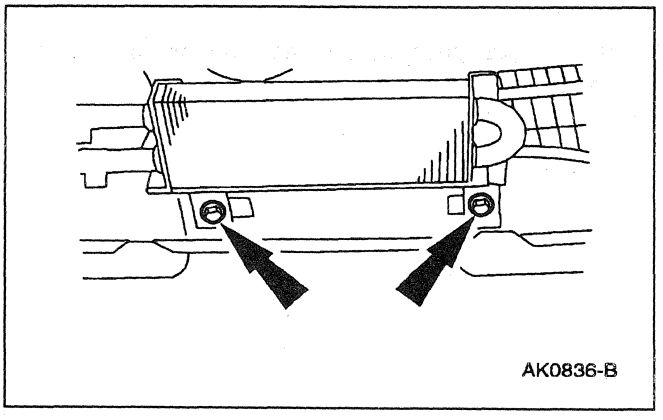

12. Remove the bolts retaining the power steering fluid cooler (3D746) to the front bumper (17757). Reposition the power steering fluid cooler.

REMOVAL AND INSTALLATION (Continued)

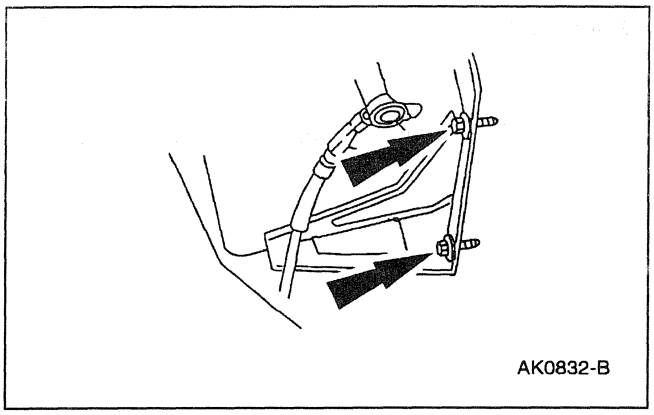
AK0832-B

13. Remove the bolts retaining the windshield washer reservoir support bracket to the front bumper.

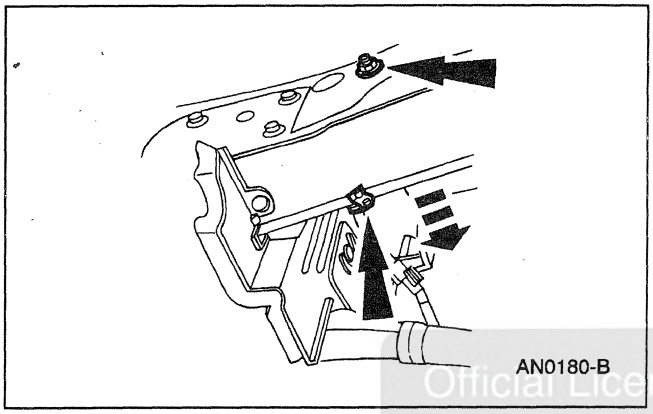
AN0180-B

14. Remove the two screws and the nut and position the headlamp ballast mounting bracket out of the way.

Official Licensed Product
Ford Motor Company

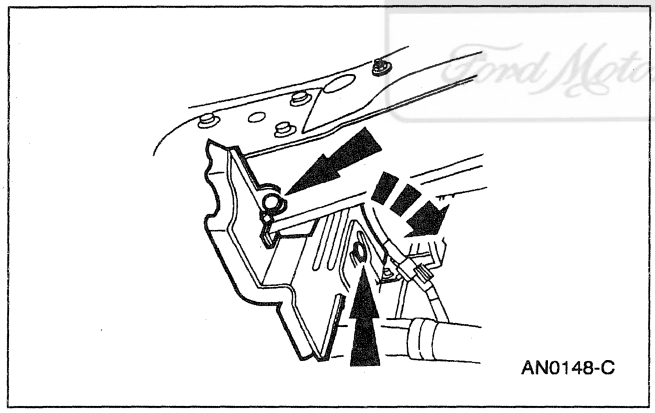
AN0148-C

15. Remove the two pushpins and the bracket from the front bumper.

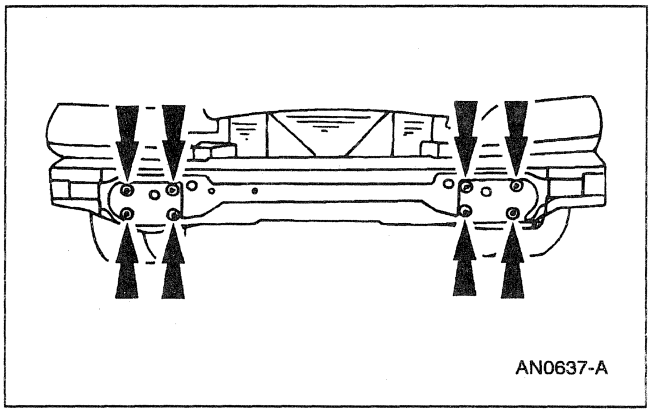
AN0637-A

16. Remove the front bumper bolts and the front bumper.

REMOVAL AND INSTALLATION (Continued)

Installation

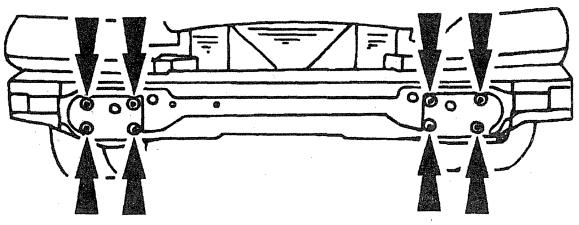

1. Follow the removal procedure in reverse order.

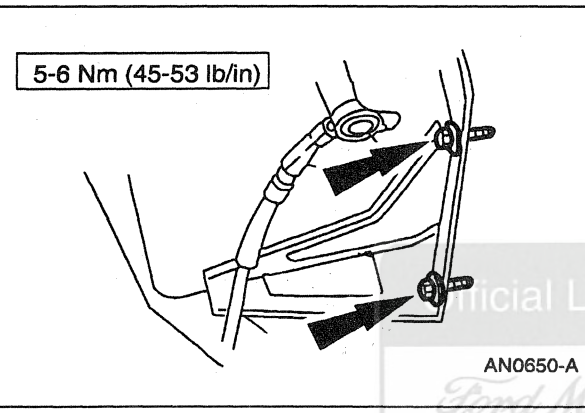

Official Licensed Product
Ford Motor Company

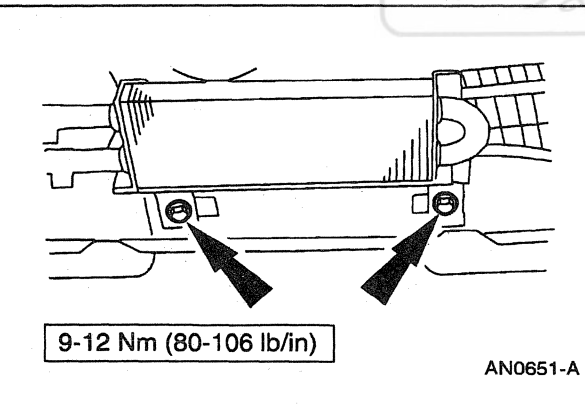

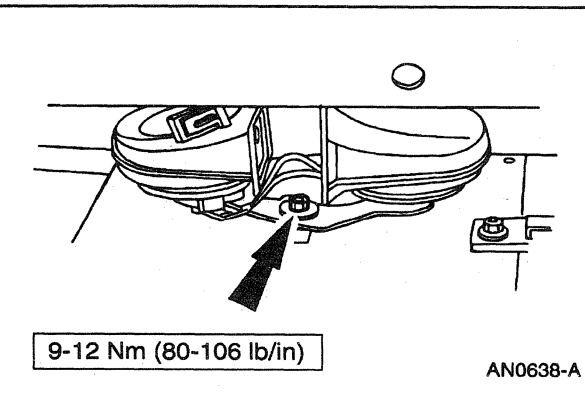

REMOVAL AND INSTALLATION (Continued)

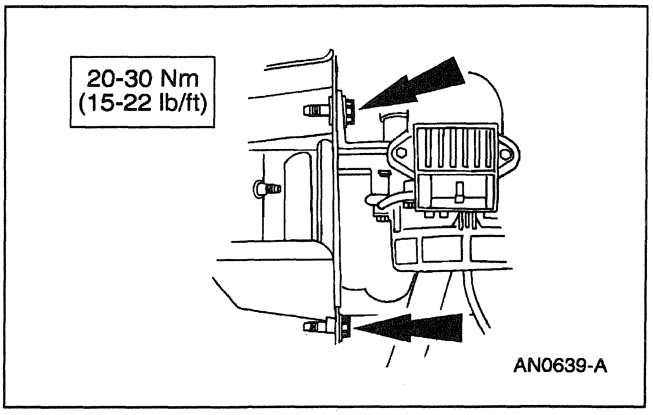

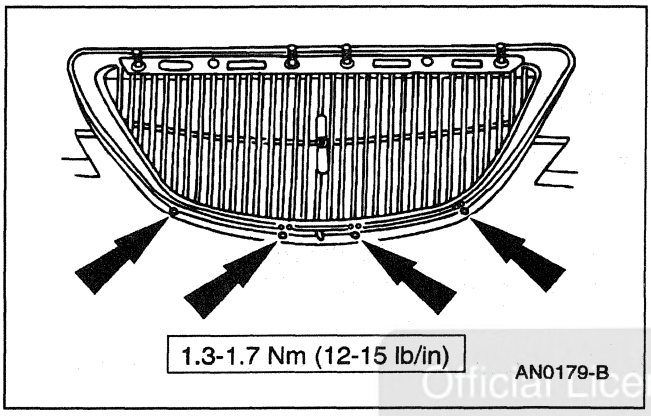

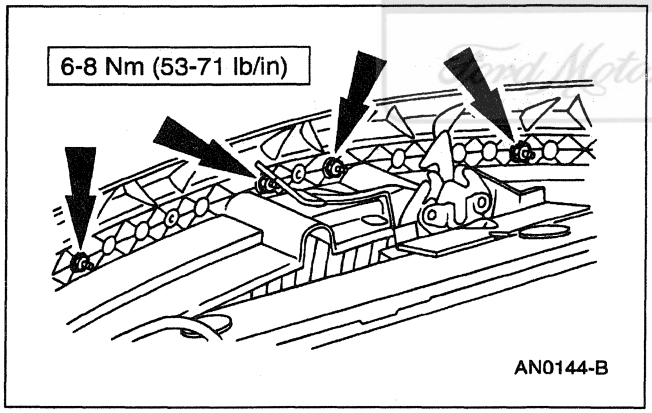

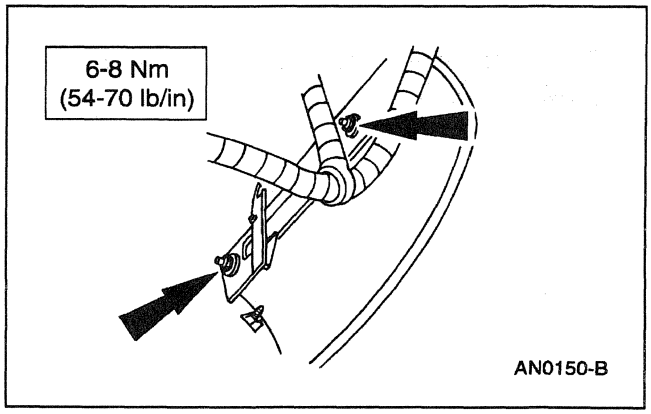

Official Licensed Product
Ford Motor Company

REMOVAL AND INSTALLATION (Continued)

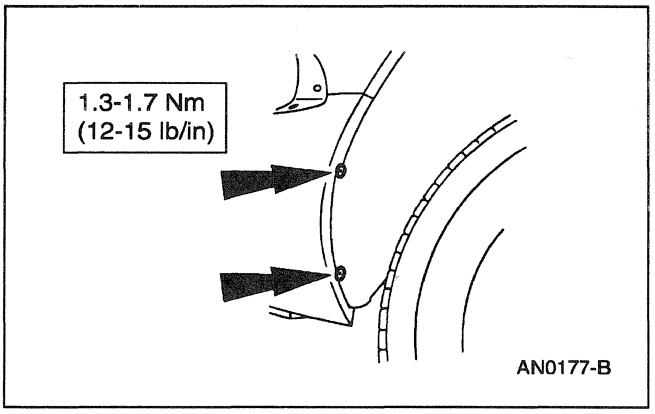

Bumper — Rear

Removal

1. Remove the digital audio compact disc player (18D806) if equipped.
2. Remove the rear lamp (13404); refer to Section 417-01.
3. Remove the rear floor sill panel (11318).
   1 Remove the pushpins.
   2 Remove the rear floor sill panel.

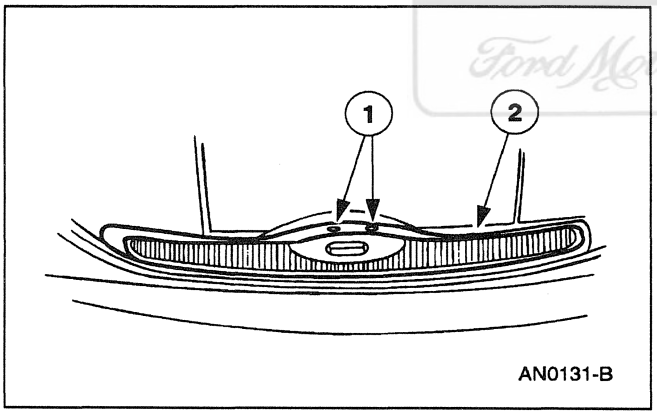

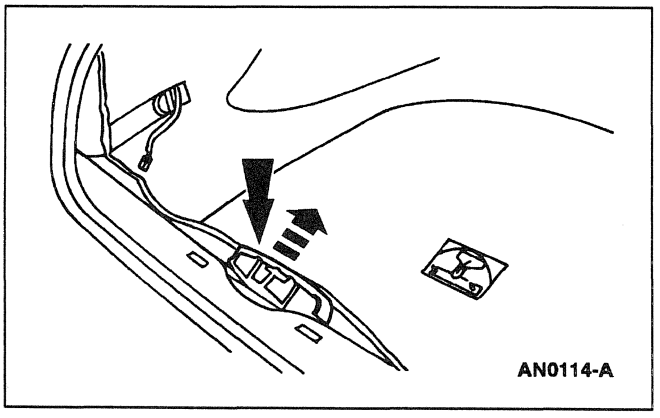

4. Position the luggage compartment cover panel (45430) out of the way.

Official Licensed Product
Ford Motor Company

REMOVAL AND INSTALLATION (Continued)

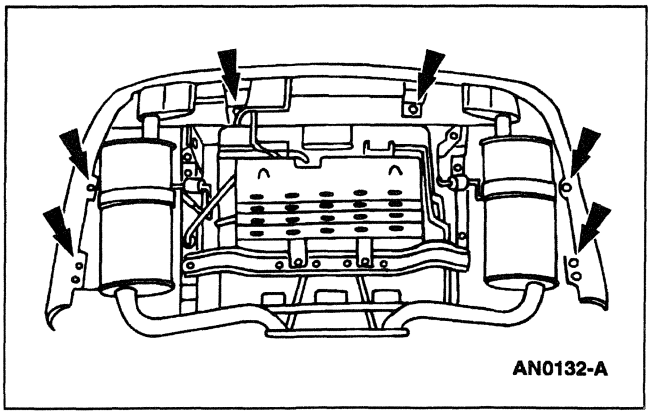

5. Remove the pushpins.

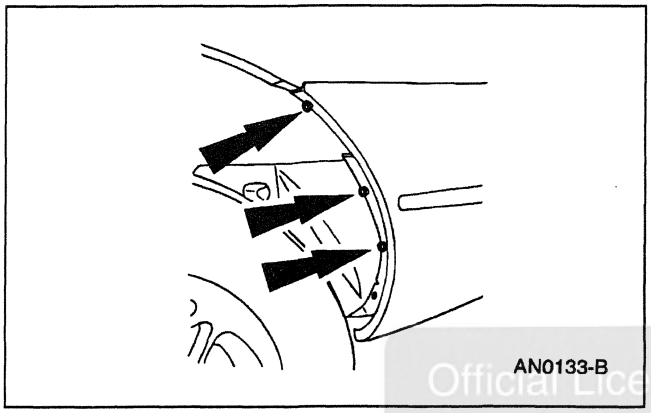

6. Remove the six screws.

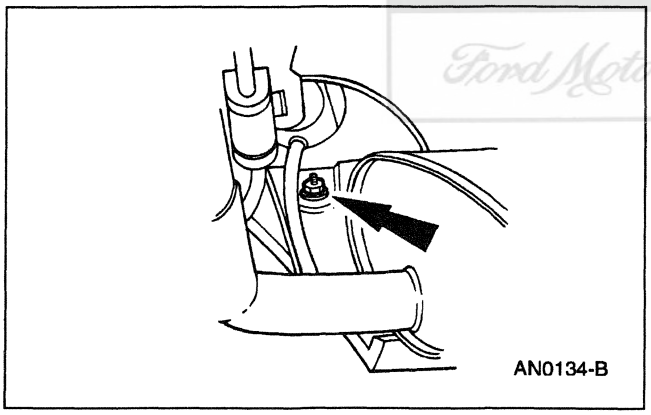

7. Remove the bumper cover quarter panel nut from inside the RH quarter panel behind the rear splash shield.

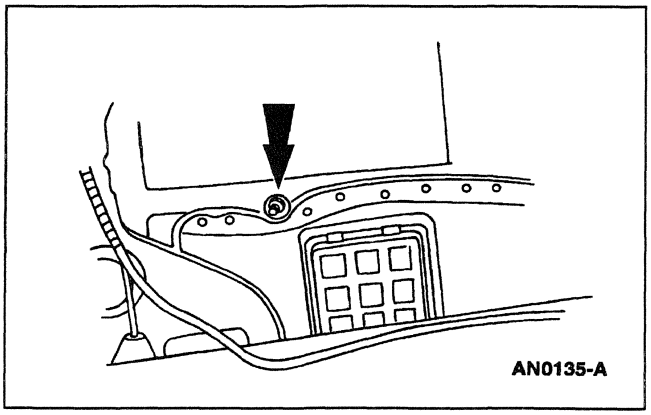

8. Remove the nut in the RH luggage compartment.

Official Licensed Product
Ford Motor Company

REMOVAL AND INSTALLATION (Continued)

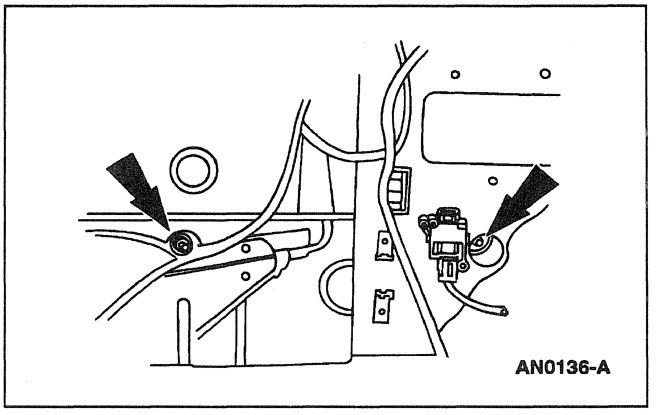

9. Remove the nuts in the LH luggage compartment.

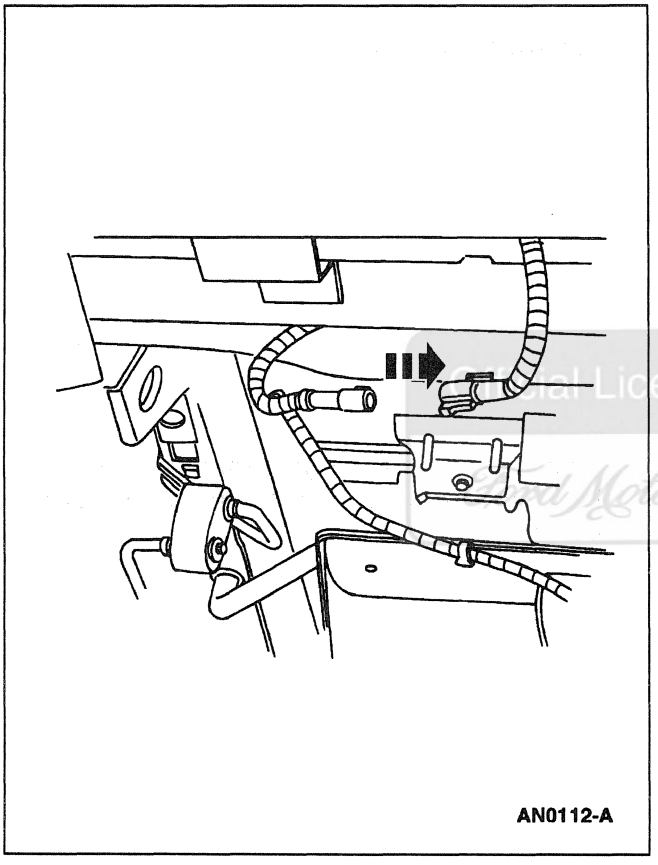

10. Disconnect the wiring harness.

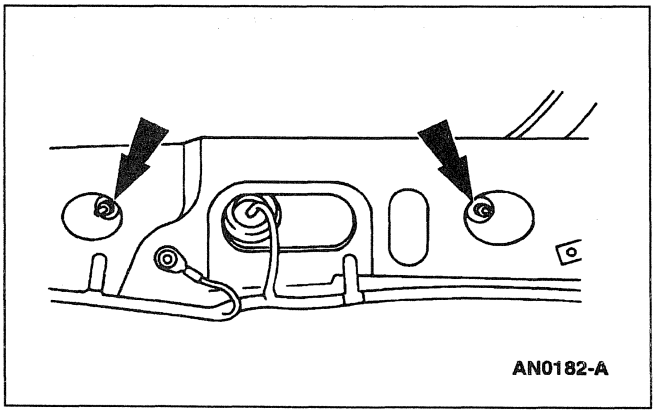

11. Remove the four nuts from the lower back panel and remove the rear bumper cover from the vehicle.

Original Licensed Product
Ford Motor Company

REMOVAL AND INSTALLATION (Continued)

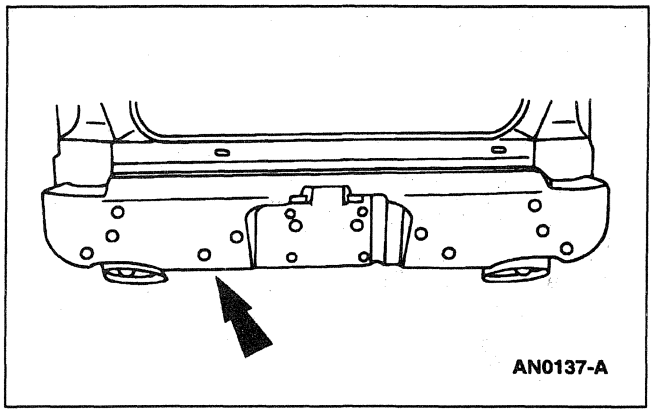

12. Remove the rear bumper isolator.

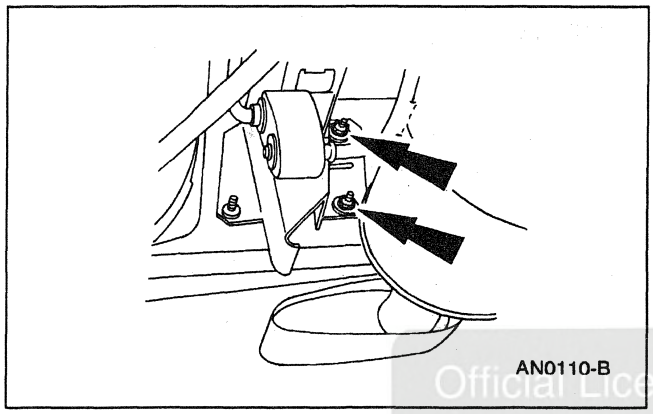

13. Remove the four nuts.

Official Licensed Product
Ford Motor Company

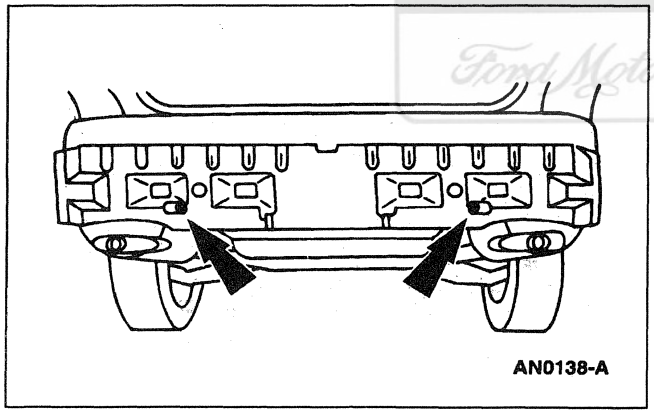

14. Remove the screws and the rear bumper (17906).

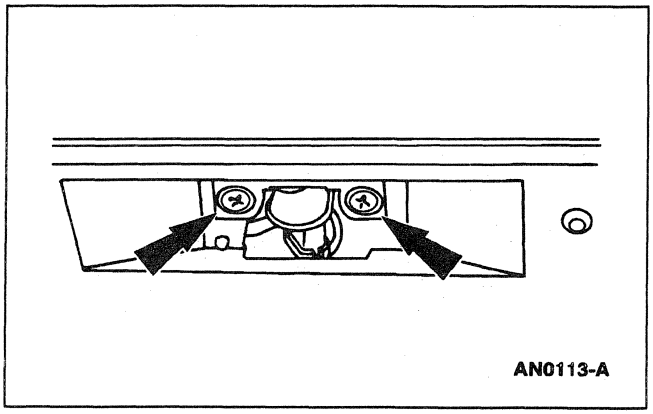

15. Remove the screws.

REMOVAL AND INSTALLATION (Continued)

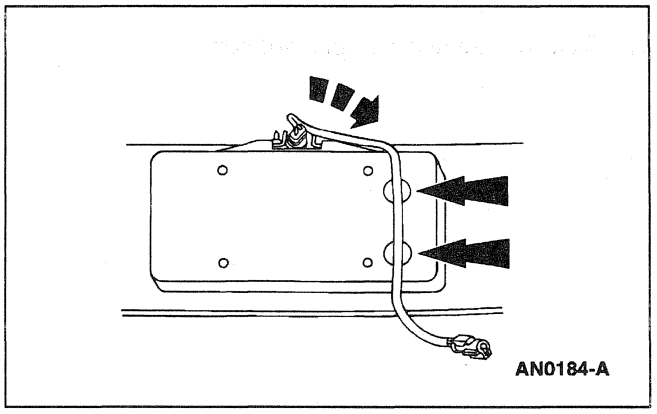

16. Remove the harness and the license plate lamp.

Installation

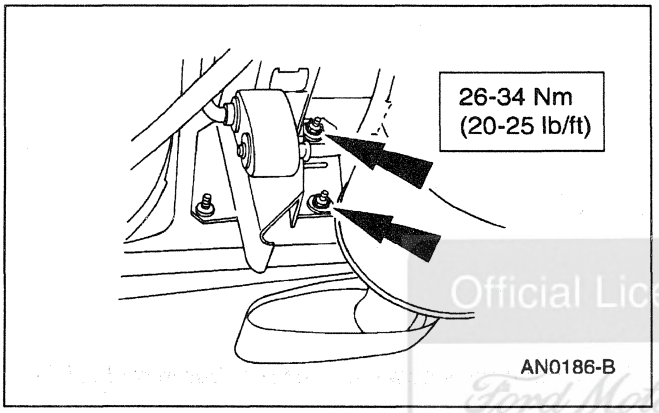

1. Follow the removal procedure in reverse order.

Official Licensed Product
Ford Motor Company

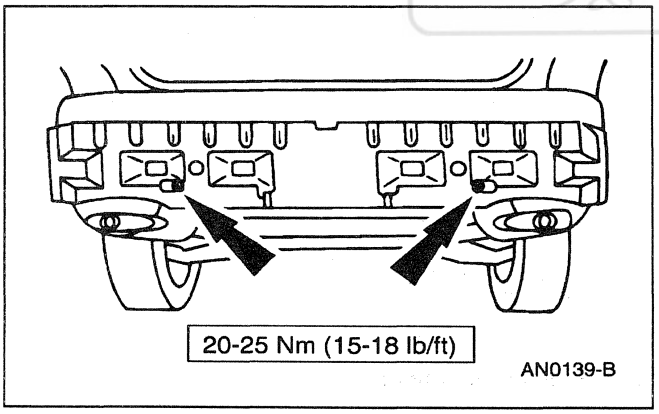

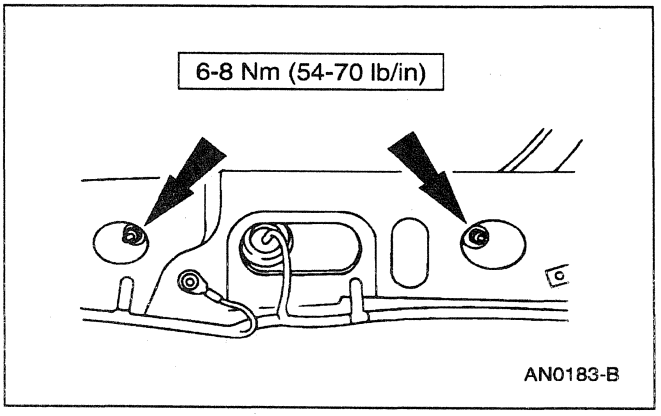

REMOVAL AND INSTALLATION (Continued)

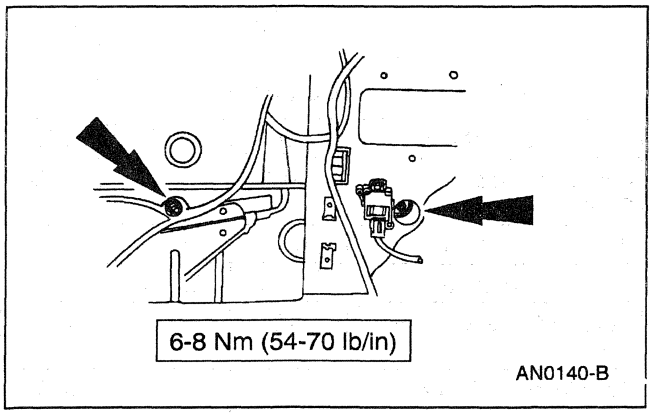

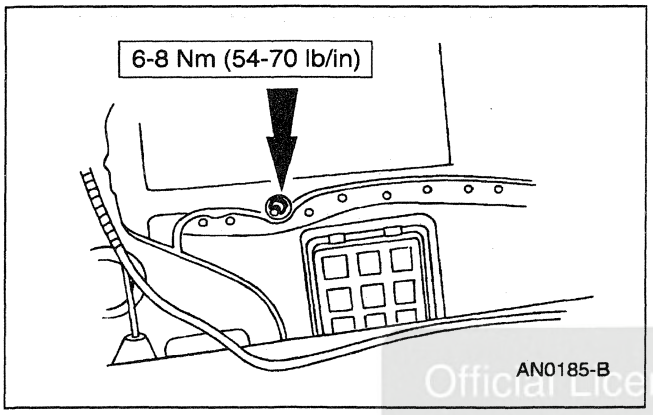

Official Licensed Product
Ford Motor Company

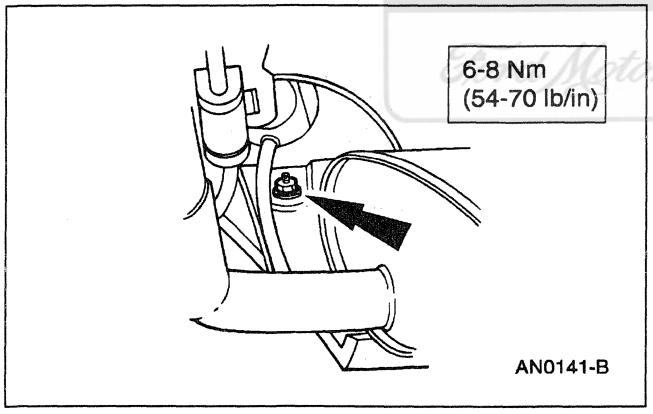

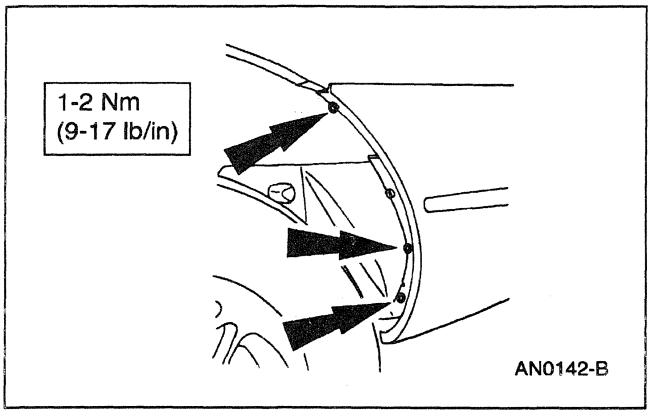

SPECIFICATIONS

Torque Specifications

Description	Nm	Lb/Ft	Lb/In
Front Bumper Cover Screws	1.3-1.7	—	12-15
Front Bumper Cover Nuts	6-8	—	54-70
Radiator Grille Screws	1.3-1.7	—	12-15
Front Bumper Bolts	34-46	25-33	—
Radiator Grille Nuts	6-8	—	53-71
Secondary Air Injection Pump Bracket Bolts	20-30	15-22	—
Horn Bracket Screw	9-12	—	80-106
Windshield Washer Reservoir Support Bracket Screws	5-6	—	45-53

(Continued)

Torque Specifications

Description	Nm	Lb/Ft	Lb/In
Power Steering Fluid Cooler Bolts	9-12	—	80-106
Rear Bumper Bolts	20-25	15-18	—
Rear Bumper Nuts	26-34	20-25	—
Bumper Cover Quarter Panel Nuts	6-8	—	54-70
Rear Bumper Cover Screws	1-2	—	9-17

Official Licensed Product
Ford Motor Company

SECTION 501-20A Occupant Restraints — Active

VEHICLE APPLICATION: Mark VIII

SUBJECT	PAGE
DESCRIPTION AND OPERATION	
Occupant Restraint System	501-20A-2
DIAGNOSIS AND TESTING	
Occupant Restraint System	501-20A-4
Component Test	501-20A-5
Inspection and Verification	501-20A-4
Symptom Chart	501-20A-5
REMOVAL AND INSTALLATION	
Retractor — Front and Rear	501-20A-6
Safety Belt Buckle — Front Seat	501-20A-7
Safety Belt Buckle — Rear Seat	501-20A-9
GENERAL PROCEDURES	
Safety Belt Tongue Rotated on Belt	501-20A-11
Safety Belt with Anchor Plate Thread Damage	501-20A-10
SPECIFICATIONS	501-20A-12

Official Licensed Product
Ford Motor Company

DESCRIPTION AND OPERATION

Occupant Restraint System

Component Location

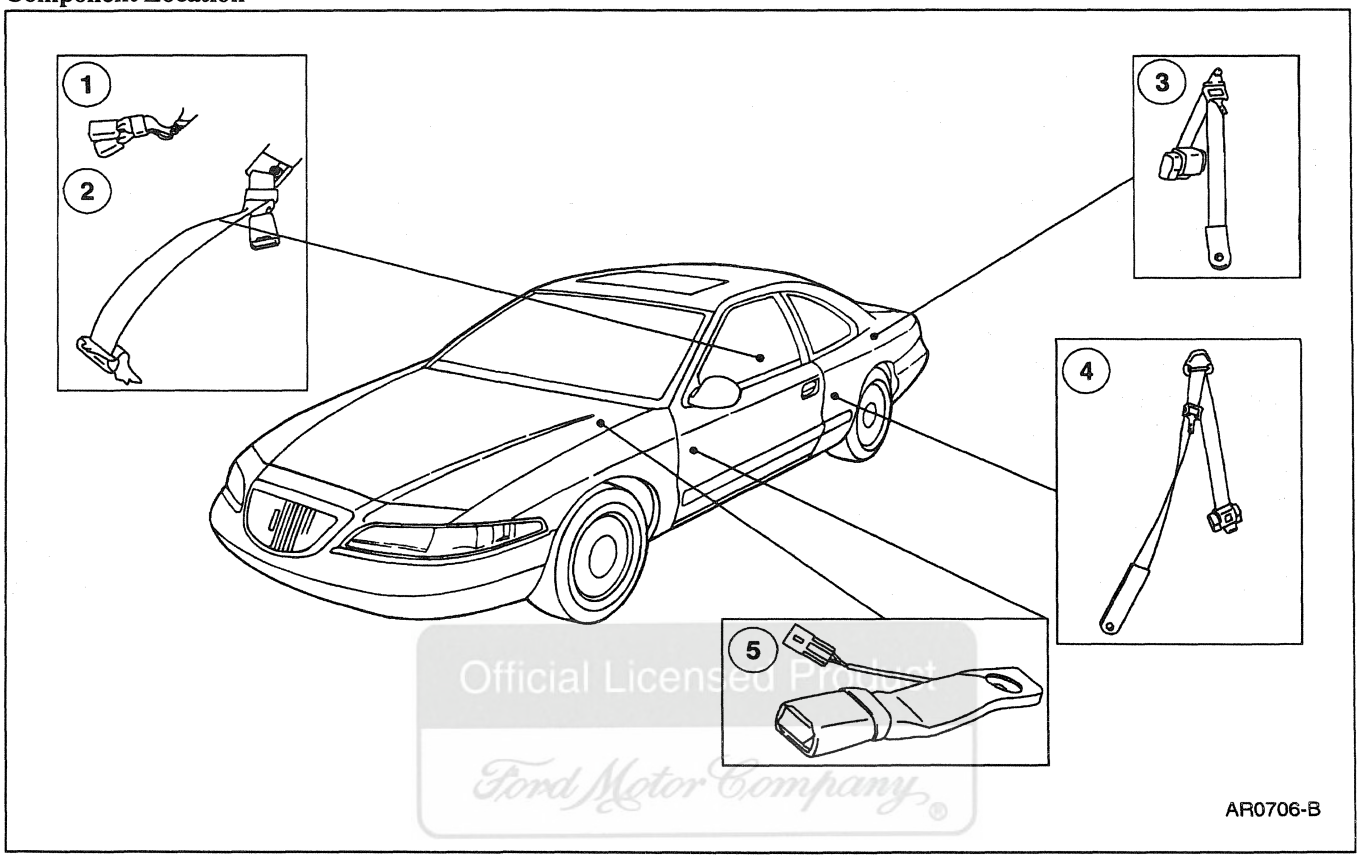

Official Licensed Product
Ford Motor Company

Item	Part Number	Description
1	60044	Rear Safety Belt and Buckle, RH
2	60045	Rear Safety Belt and Buckle, LH
3	611B68	Rear Safety Belt Retractor and Tongue
4	611B08	Front Safety Belt Retractor and Tongue
5	61203	Front Safety Belt Buckle End

(Continued)

The active restraint system components are located as follows:

- The front and rear safety belt retractors and tongues are secured to the body under the rear quarter trim panel.
- The front inboard buckle end is secured to the front seat assembly by the front safety belt buckle support.
- The rear LH and RH buckle ends and the center belt and buckle are secured to the rear floor pan under the rear seat.

DESCRIPTION AND OPERATION (Continued)

⚠ WARNING: ALL SAFETY BELT ASSEMBLIES INCLUDING RETRACTORS, BUCKLES, FRONT SEAT BELT BUCKLE SUPPORT ASSEMBLIES (SLIDE BAR), IF EQUIPPED, SHOULDER BELT HEIGHT ADJUSTERS (IF EQUIPPED) CHILD SAFETY SEAT TETHER BRACKET ASSEMBLIES (IF EQUIPPED) AND ATTACHING HARDWARE SHOULD BE INSPECTED AFTER ANY COLLISION. ALL BELT ASSEMBLIES SHOULD BE REPLACED UNLESS A QUALIFIED TECHNICIAN FINDS THE ASSEMBLIES SHOW NO DAMAGE AND OPERATE PROPERLY. BELT ASSEMBLIES NOT IN USE DURING A COLLISION SHOULD ALSO BE INSPECTED AND REPLACED IF EITHER DAMAGE OR IMPROPER OPERATION IS NOTED.

⚠ WARNING: EACH SEATING POSITION IN THE VEHICLE HAS A SPECIFIC SAFETY BELT ASSEMBLY WHICH CONSISTS OF ONE BUCKLE AND ONE TONGUE. THE SAFETY BELT ASSEMBLY IS DESIGNED TO BE USED AS A PAIR AND IS NOT TO BE USED ACROSS SEATING POSITIONS.

A continuous-loop, single retractor active restraint system is used on this vehicle for both the front seats and the rear outboard seats.

Safety Belt, Lap/Shoulder

While the vehicle is in motion, the combination lap and shoulder belt adjusts to the occupant's movement. However, if the vehicle is braked hard, cornered hard or if the vehicle receives an impact of 8 km/h (5 mph) or more, the lap and shoulder belt locks and helps reduce the occupant's forward movement.

Safety Belt, Buckle End—Front

The inboard front safety belt buckle end (61203) is secured to the front safety belt buckle support. This allows the front safety belt buckle end to move with the front seat.

Safety Belt, Rear Center

A separate RH rear safety belt and buckle (60044) and LH rear safety belt and buckle (60045) are provided for the center rear seating position with the belt and buckles secured to the rear floor pan (11215).

Safety Belt, Dual Locking Mode

The dual locking mode retractor on the shoulder belt portion of the combination lap/shoulder safety belt for the front seat passenger and rear seat outboard passengers operates in two ways:

1. In the vehicle sensitive (emergency locking) mode, the shoulder belt retractor will allow the occupant freedom of movement, locking tight only on hard braking, hard cornering or impacts of approximately 8 km/h (5 mph) or more. The front and rear outboard seat belt retractors can also be made to lock by pulling/jerking on the belt.
2. In the automatic locking mode, the shoulder belt retractor will be automatically locked and remain locked when the combination lap/shoulder safety belt is buckled and does not allow the occupant freedom of movement. This mode provides tight lap/shoulder belt fit on the occupant and on a child safety seat or infant carrier installation restraint.
3. When the combination lap/shoulder belt is unbuckled and allowed to retract completely, the retractor will switch to the vehicle sensitive (emergency) locking mode.

⚠ WARNING: REAR-FACING INFANT SEATS SHOULD NEVER BE PLACED IN THE FRONT SEATS.

The automatic locking mode must be used when installing a child safety seat on the front passenger seat and rear outboard seats where dual locking retractors are provided.

Safety Belt Warning System

The safety belt warning indicator illuminates in the instrument cluster and a chime sounds to remind the occupants to fasten their safety belts.

The conditions of operation for the safety belt warning indicator and chime are as follows:

- If the driver's safety belt is not buckled before the ignition switch is turned to RUN, then the safety belt indicator illuminates for 1-2 minutes and the warning chime sounds for 4-8 seconds.
- If the driver's safety belt is buckled while the warning indicator is illuminated and the reminder chime is sounding, then the safety belt warning indicator and reminder chime turn off.

DESCRIPTION AND OPERATION (Continued)

- If the driver's safety belt is buckled before the ignition switch is turned to RUN then the safety belt warning indicator and reminder chime remain off.

Safety Belt Extension

A safety belt that is too short even when fully extended can be lengthened. The safety belt extension (611C22) is available. This assembly will add approximately 20 cm (8 inches) to the length of the safety belt. Use the safety belt extension only if the safety belt is too short when fully extended. Do not use the safety belt extension to change the fit of the shoulder belt across the torso. Safety belt extensions are available at no cost from any authorized Ford or Lincoln-Mercury dealer.

Child Safety Seat Tether Attachment

If a child safety belt anchor tether (613D74) is required for the child's safety seat, a child safety belt anchor tether can be obtained free from any Ford or Lincoln-Mercury dealer. Attachment holes at each rear seating position have been provided in all vehicles.

⚠ WARNING: IT IS IMPORTANT THAT THE BOLT/ANCHOR BE SECURELY TIGHTENED TO SPECIFICATION. OTHERWISE, THE CHILD'S SAFETY SEAT MAY NOT BE PROPERLY SECURED AND THE CHILD COULD BE INJURED IN CASE OF A SUDDEN STOP OR ACCIDENT.

Instructions for installing the child safety belt anchor tether are included in the kit with the tether attachment.

Official Licensed Product
Ford Motor Company

DIAGNOSIS AND TESTING

Occupant Restraint System

Inspection and Verification

1. Verify the customer's original concern by operating the active restraint system to duplicate the condition.
2. Inspect to determine if any of the following mechanical or electrical concerns apply:

Visual Inspection Chart

Mechanical	Electrical
• Open fuse. • Bare, broken or disconnected wire. • Connector not tightly engaged. • Safety belt warning indicator lamp burned out or broken.	• Inspect the safety belt webbing for integrity.

3. If the inspection reveals an obvious concern(s) that can be readily identified, service as required.
4. If the concern remains after the inspection, determine the symptom and go to the Symptom Chart.

DIAGNOSIS AND TESTING (Continued)

Symptom Chart

SYMPTOM CHART

Condition	Possible Source	Action
• The Safety Belt Warning Chime Does Not Operate, the Safety Belt Warning Indicator Lamp is OK	• Steering column/ignition/lighting control module. • Circuitry. • Driver seat module.	• REFER to Section 413-08.
• The Safety Belt Warning Indicator Lamp Does Not Operate, The Safety Belt Warning Chime is OK	• Burned out bulb. • Circuitry. • Driver seat module.	• REFER to Section 413-08.
• Neither the Safety Belt Warning Chime nor the Safety Belt Warning Indicator Lamp Operates	• Safety belt switch. • Driver seat module. • Circuitry.	• REFER to Section 413-08.
• Excessive Pressure on the Occupant During Normal Wear, the Webbing Cannot Be Extracted, Excessive Slack in Webbing Does Not Retract	• Front safety belt retractor and tongue. • Rear safety belt retractor and tongue.	• REPLACE if necessary. • PERFORM the Functional Test; refer to Component Test in this section.

Component Test

Functional Test

1. **NOTE:** If the RH or the rear outboard belts are to be tested, a passenger must be used.

   Buckle up and proceed to a safe area.
2. Attain a speed of 8 km/h (5 mph).
3. **WARNING: THE DRIVER AND PASSENGER MUST BE PREPARED TO BRACE THEMSELVES IF THE RETRACTOR DOES NOT LOCK.**

   Test the safety belts.
   1 Grasp the shoulder harness and prepare to lean forward.
   2 Make maximum brake application without a skid.
   3 Lean forward slightly when the brake application is made.
4. The safety belts should lock up with minimum webbing extension.
5. If there is a lockup of both shoulder straps, the safety belt assemblies are functioning properly. Should either or both retractors fail to lock up at the 8 km/h (5 mph) speed, repeat the test at a constant 24 km/h (15 mph) speed. (This test must be performed with a RH front or rear passenger if the RH front or rear outboard belts are to be tested.)
6. **NOTE:** If either or both the shoulder belts do not lock up, the sheet metal in the retractor's mounting surface may need to be returned to its original shape and structural integrity.

   If either or both shoulder belts do not lock up at the 24 km/h (15 mph) test, return the vehicle for service of the safety belts.

Official Licensed Product Ford Motor Company

REMOVAL AND INSTALLATION

Retractor — Front and Rear

Removal

1. Remove the quarter trim panel (31012); refer to Section 501-05.

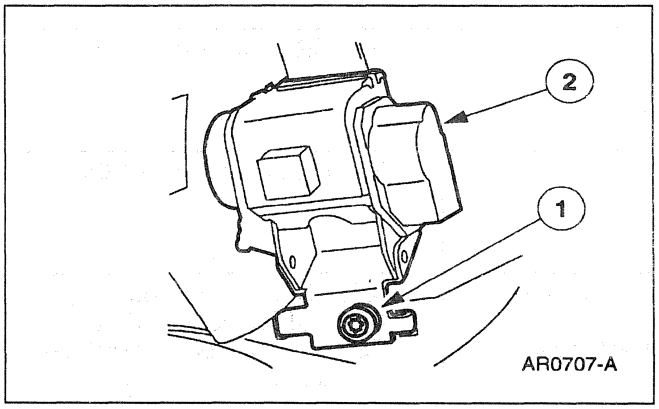

2. Remove the front safety belt retractor and tongue (611B08).
   1 Remove the front safety belt retractor bolt.
   2 Remove the front safety belt retractor and tongue.

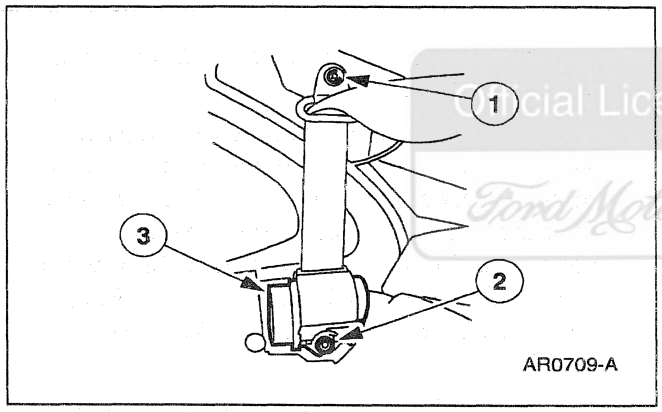

3. Remove the rear safety belt retractor and tongue (611B68).
   1 Remove the D-ring bolt.
   2 Remove the rear safety belt retractor bolt.
   3 Remove the rear safety belt retractor and tongue.

Special Licensed Product
Ford Motor Company

Installation

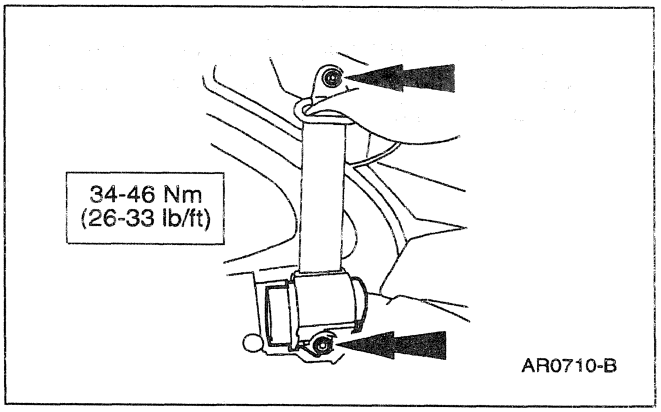

1. **NOTE:** On new retractors the shipping clip must remain clipped to the belt prior to attachment of the retractor to vehicle. The shipping clip must be removed after the retractor is installed, and before the quarter trim panel is installed.

   Follow the removal procedure in reverse order.

REMOVAL AND INSTALLATION (Continued)

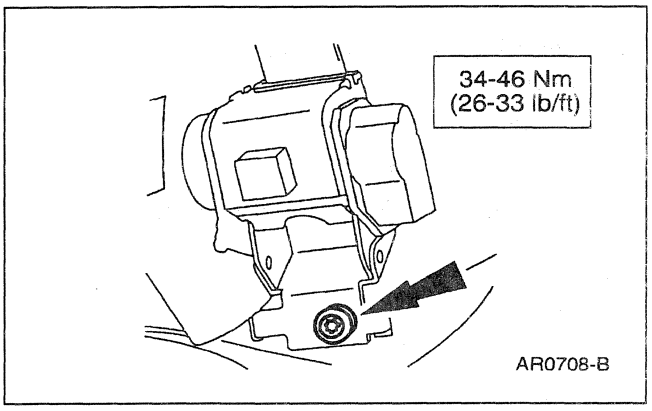

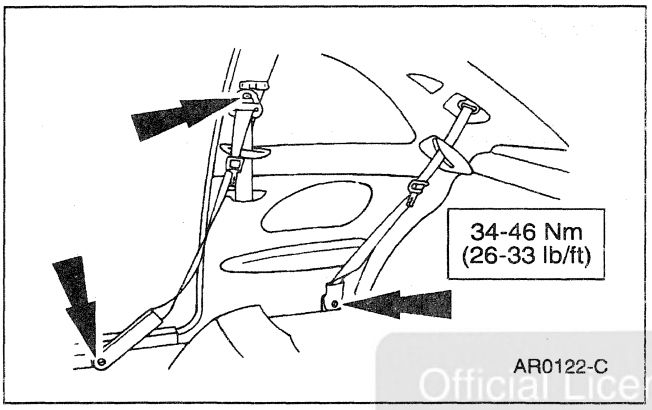

2. Check the restraint system for proper operation.

Official Licensed Product
Ford Motor Company

Safety Belt Buckle — Front Seat

Removal

1. Remove the front seat; refer to Section 501-10.

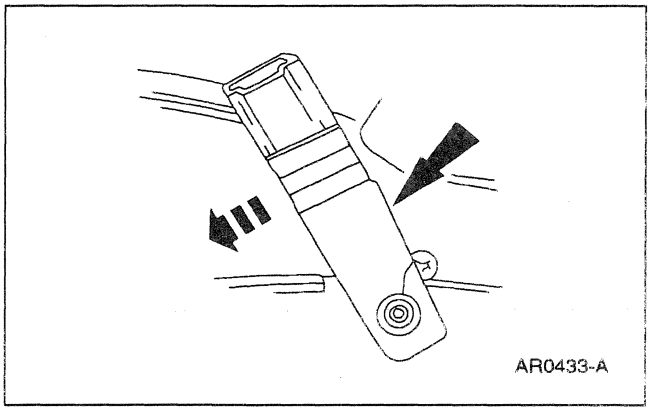

2. **NOTE:** The LH front safety belt buckle end (61203) has an electrical connector.

   Remove the front safety belt buckle end and disconnect the connector if necessary.

REMOVAL AND INSTALLATION (Continued)

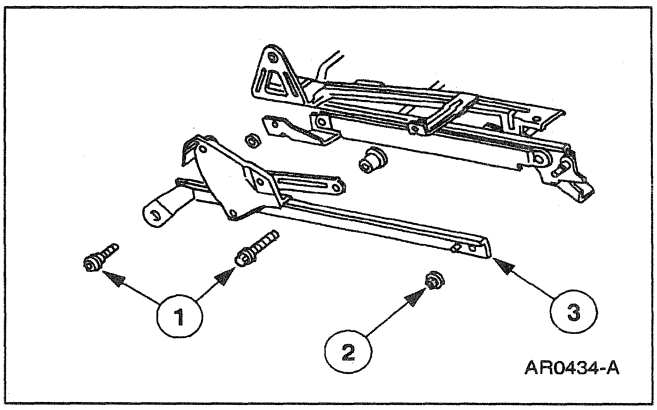

3. Remove the front safety belt buckle support (610C84).
   1 Remove the screws.
   2 Remove the nut.
   3 Remove the front safety belt buckle support.

Installation

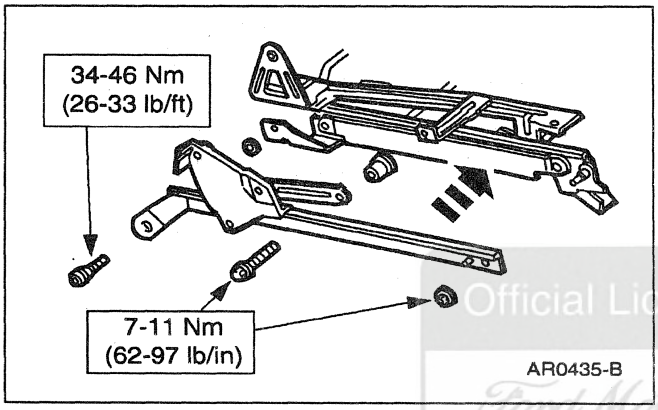

1. Follow the removal procedure in reverse order.

Official Licensed Product
Ford Motor Company

2. Check the restraint system for proper operation.

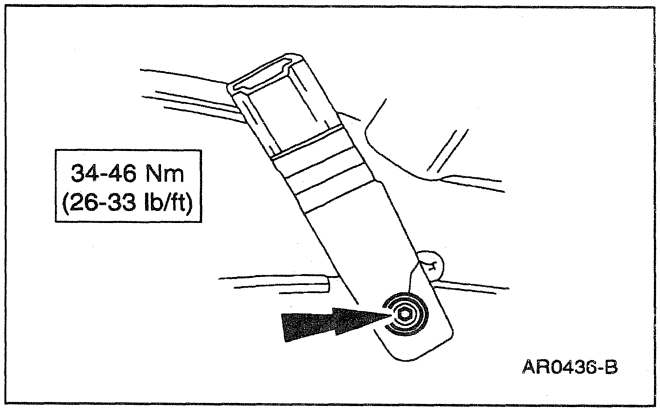

REMOVAL AND INSTALLATION (Continued)

Safety Belt Buckle — Rear Seat

Removal

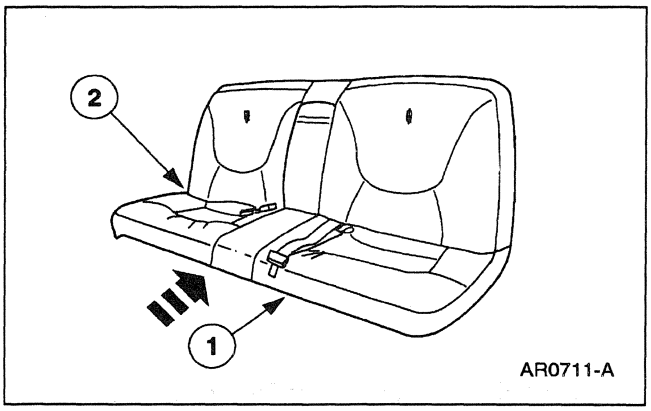

1. Remove the rear seat cushion pad and frame (600A88).
   1 Apply pressure to the lower front portion of the rear seat cushion pad and frame.
   2 Push the rear seat cushion pad and frame rearward to disengage the rear seat cushion front retainer (63370).

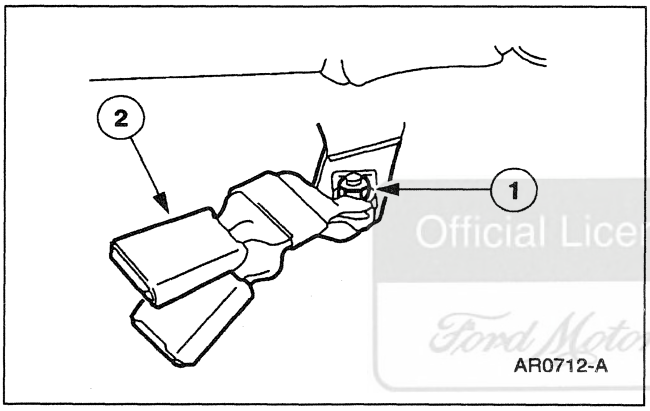

2. Remove the RH rear safety belt and buckle (60044).
   1 Remove the nut.
   2 Remove the rear safety belt and buckle.

Official Licensed Product
Ford Motor Company

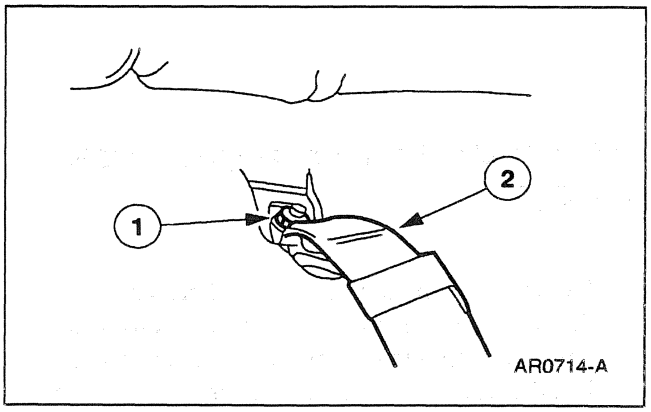

3. Remove the LH rear safety belt and buckle (60045).
   1 Remove the nut.
   2 Remove the rear safety belt and buckle.

REMOVAL AND INSTALLATION (Continued)

Installation

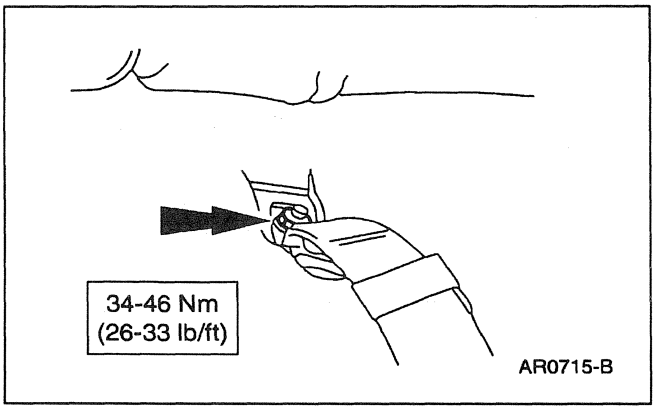

1. Follow the removal procedure in reverse order.

2. Check the restraint system for proper operation.

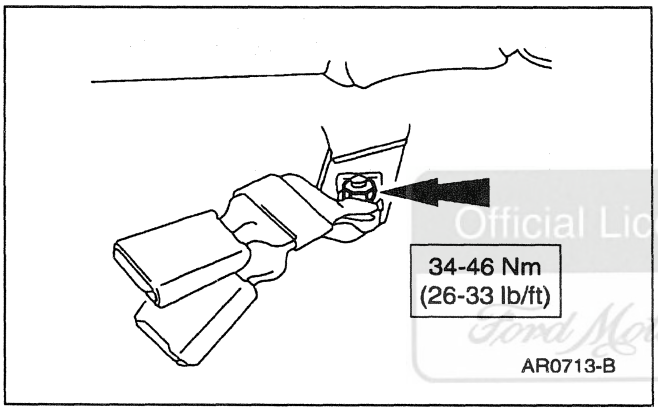

Official Licensed Product
Ford Motor Company

GENERAL PROCEDURES

Safety Belt with Anchor Plate Thread Damage

1. **NOTE:** The lap/shoulder safety belts are factory-installed in their proper locations. If the belts are removed for any reason, they must be installed; refer to removal and installation. The 7/16 x 20 Torx® head anchor bolts must be hand-started and then tightened.

   Remove the broken or stripped bolt.

2. Drill out the internal threads in the safety belt anchor plate with a 27/64-inch drill.

3. Rethread the anchor plate with a 1/2-13 tap.

GENERAL PROCEDURES (Continued)

4. Blow out the chips.

5. **NOTE:** Original parts are to be replaced with the service parts; refer to General Specifications chart in this section.

   Install the attachment parts in the proper sequence. Install new bolt and hand-tighten as described.

Safety Belt Tongue Rotated on Belt

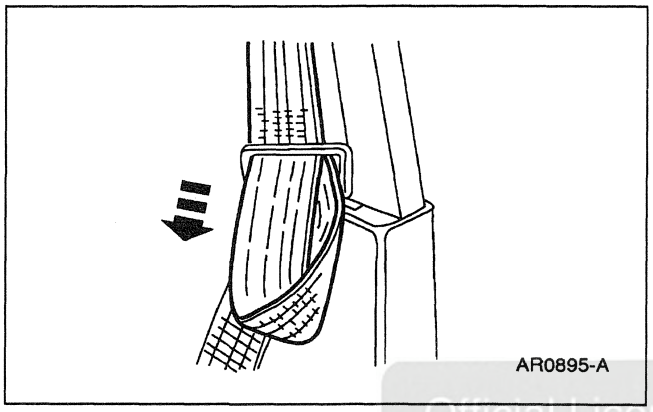

1. Grasp the belt tongue and pull the belt webbing down to form a loop through the upper (longer and narrower) slot in the tongue.

Official Licensed Product
Ford Motor Company

2. Rotate and fold the belt webbing over itself within the slot to remove the twist.

3. Pull the excess belt webbing back through the upper slot in the belt tongue.

4. Grasp the belt tongue and pull the belt webbing up to form a loop through the lower slot in the tongue.

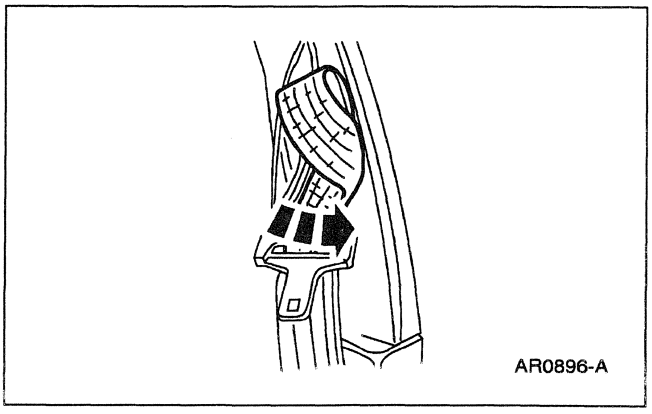

5. Rotate and fold the belt webbing over itself within the slot to remove the twist.

6. Pull the excess belt webbing through the slot.

GENERAL PROCEDURES (Continued)

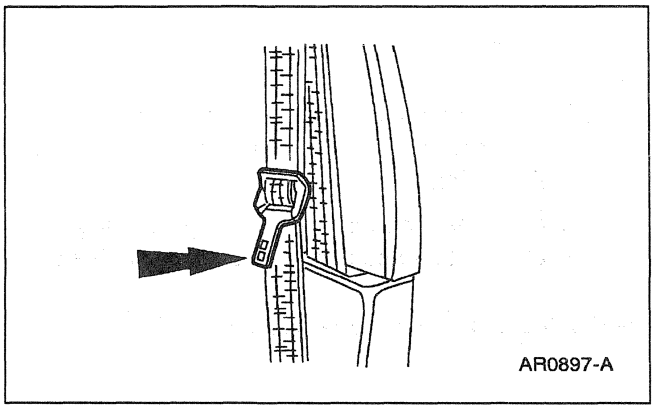

7. The safety belt tongue should face inward when completed.

SPECIFICATIONS

General Specifications

Item	Specification
Safety belt with damaged weld nut anchor plate threads replacement parts.	
386392-S1000	Bolt 7/16 X 20 X 2.15 Pan Head Tapping Code Number 1G
386276-S100	Bolt 7/16 X 20 X 1.75 Pan Shoulder Tapping Code Number 1L
389370-S100	Bolt 7/16 X 20 X 1.15 Pan Head Tapping Code Number 1M
N800937-S190	Nut—M12 X 1.75 Hex Flange Lock
N801010-S40	M8 X 1.25 X 25 Screw Truss Head Torx®
N805577-S190	Screw M12 XC 1.75 X 18.0 Truss Head Torx® Code Number H
N803886-S190	Screw w/Shldr M12 X 1.75 X 34 Truss Head Torx® Code Number Q
N386277-S100	Bolt 7/16 X 20 X 1.38 Pan Head Shoulder Tapping Code Number 1K
383754-S36	Bolt 1/2 X 13 X 2.25 Pan Head Shoulder Locking Code Number Z
389478-S190	Bolt 1/2 X 13 X 1.15 Bolt Pan Head Locking Code Number U
385709-S36	Bolt 1/2 X 13 X 1.38 Pan Head Shoulder Locking Code Number T

Torque Specifications

Description	Nm	Lb/Ft	Lb/In
Front Safety Belt Guide Bolt	34-46	26-33	—
Front Safety Belt Retractor Bolt	34-46	26-33	—
Front Safety Belt Anchor-to-Sill Bolt	34-46	26-33	—
Front Safety Belt Buckle End Bolt	34-46	26-33	—
Rear Safety Belt Guide Bolt	34-46	26-33	—
Rear Safety Belt Anchor-to-Lower Quarter Trim Panel Bolt	34-46	26-33	—
Rear Safety Belt Retractor Bolt	34-46	26-33	—
Rear Safety Belt and Buckle Anchor Nuts	34-46	26-33	—
Front Safety Belt Buckle Support Forward Screw and Nut	7-11	—	62-97

SECTION 501-20B Occupant Restraints — Passive — Supplemental Air Bag System

VEHICLE APPLICATION: Mark VIII

SUBJECT **PAGE**

DESCRIPTION AND OPERATION
Air Bag Supplemental Restraint System (SRS) 501-20B-3
Air Bag Diagnostic Monitor 501-20B-6
Air Bag Module — Driver 501-20B-5
Air Bag Module — Passenger 501-20B-6
Air Bag Sliding Contact 501-20B-5
Electrical System 501-20B-7
DIAGNOSIS AND TESTING
Air Bag Supplemental Restraint System (SRS) 501-20B-8
Air Bag System Reconnect Checklist 501-20B-10
Deactivation Procedure 501-20B-8
Diagnosing Customer Concerns With Hard Diagnostic Trouble Codes (DTCs) 501-20B-8
Diagnosing Customer Concerns Without Hard Diagnostic Trouble Codes 501-20B-8
Glossary 501-20B-9
Reactivation Procedure 501-20B-9
Diagnostic Instructions — Air Bag Supplemental Restraint System (SRS) 501-20B-10
Inspection and Verification 501-20B-11
Symptom Chart 501-20B-11
Pinpoint Tests — Air Bag Supplemental Restraint System (SRS) 501-20B-12
LFC 51 — Air Bag Diagnostic Monitor Internal Thermal Fuse — Fuse Open Due to Intermittent Short to Ground 501-20B-67
Pinpoint Test B: Continuous Air Bag Indicator — Air Bag Diagnostic Monitor Disconnected or Inoperative 501-20B-14
Pinpoint Test C: LFC 12 — Low Battery Voltage 501-20B-16
Pinpoint Test D: LFC 13 — Air Bag Circuit Short to Ground 501-20B-20
Pinpoint Test E: LFC 14 — Primary Crash Sensor Circuit Short to Ground 501-20B-26
Pinpoint Test F: LFC 21 — Safing Sensor Not Mounted to Vehicle Properly 501-20B-28
Pinpoint Test G: LFC 22 — Safing Sensor Output Circuit Short to Battery 501-20B-32
Pinpoint Test H: LFC 23 — Safing Sensor Input Feed/Return Circuit Open 501-20B-37
Pinpoint Test I: LFC 24 — Safing Sensor Output Feed/Return Circuit Open 501-20B-39
Pinpoint Test J: LFC 32 — Driver Air Bag Circuit High Resistance or Open 501-20B-43
Pinpoint Test K: LFC 33 — Passenger Air Bag Circuit High Resistance or Open 501-20B-47
Pinpoint Test L: LFC 34 — Driver Air Bag Circuit Low Resistance or Short 501-20B-50
Pinpoint Test M: LFC 35 — Passenger Air Bag Circuit Low Resistance or Short 501-20B-54
Pinpoint Test N: LFC 41 — RH Primary Crash Sensor Feed/Return Circuit Open 501-20B-56

SUBJECT PAGE

Pinpoint Test O: LFC 42 — LH Primary Crash Sensor Feed/Return Circuit Open 501-20B-59
Pinpoint Test P: LFC 44 — RH Primary Crash Sensor Not Mounted to Vehicle Properly 501-20B-61
Pinpoint Test Q: LFC 45 — LH Primary Crash Sensor Not Mounted to Vehicle Properly 501-20B-63
Pinpoint Test R: LFC 52 — Backup Power Supply Voltage Boost Fault 501-20B-68
Pinpoint Test S: LFC 53 — Primary Crash Sensor Circuits Resistance to Ground or Air Bag Diagnostic Monitor Fault 501-20B-72
Rapid Continuous Flashing of Air Bag Indicator (No LFC) — All Primary Crash Sensors Disconnected 501-20B-74

REMOVAL AND INSTALLATION

Air Bag Sliding Contact 501-20B-88
Diagnostic Monitor — Air Bag 501-20B-80
Module — Driver Air Bag 501-20B-81
Module — Passenger Air Bag 501-20B-85
Sensor — Air Bag Safing 501-20B-78
Sensor — Primary Crash 501-20B-75

GENERAL PROCEDURES

Air Bag Disposal 501-20B-92

SPECIFICATIONS 501-20B-95

Official Licensed Product
Ford Motor Company

DESCRIPTION AND OPERATION

Air Bag Supplemental Restraint System (SRS)

The air bag supplemental restraint system (SRS) is designed to provide increased collision protection for front seat occupants in addition to that provided by the three point safety belt system. Safety belt use is necessary to obtain the best occupant protection and to receive the full advantages of the SRS.

The air bag supplemental restraint system (SRS) components are shown in the following illustration.

Official Licensed Product
Ford Motor Company

DESCRIPTION AND OPERATION (Continued)

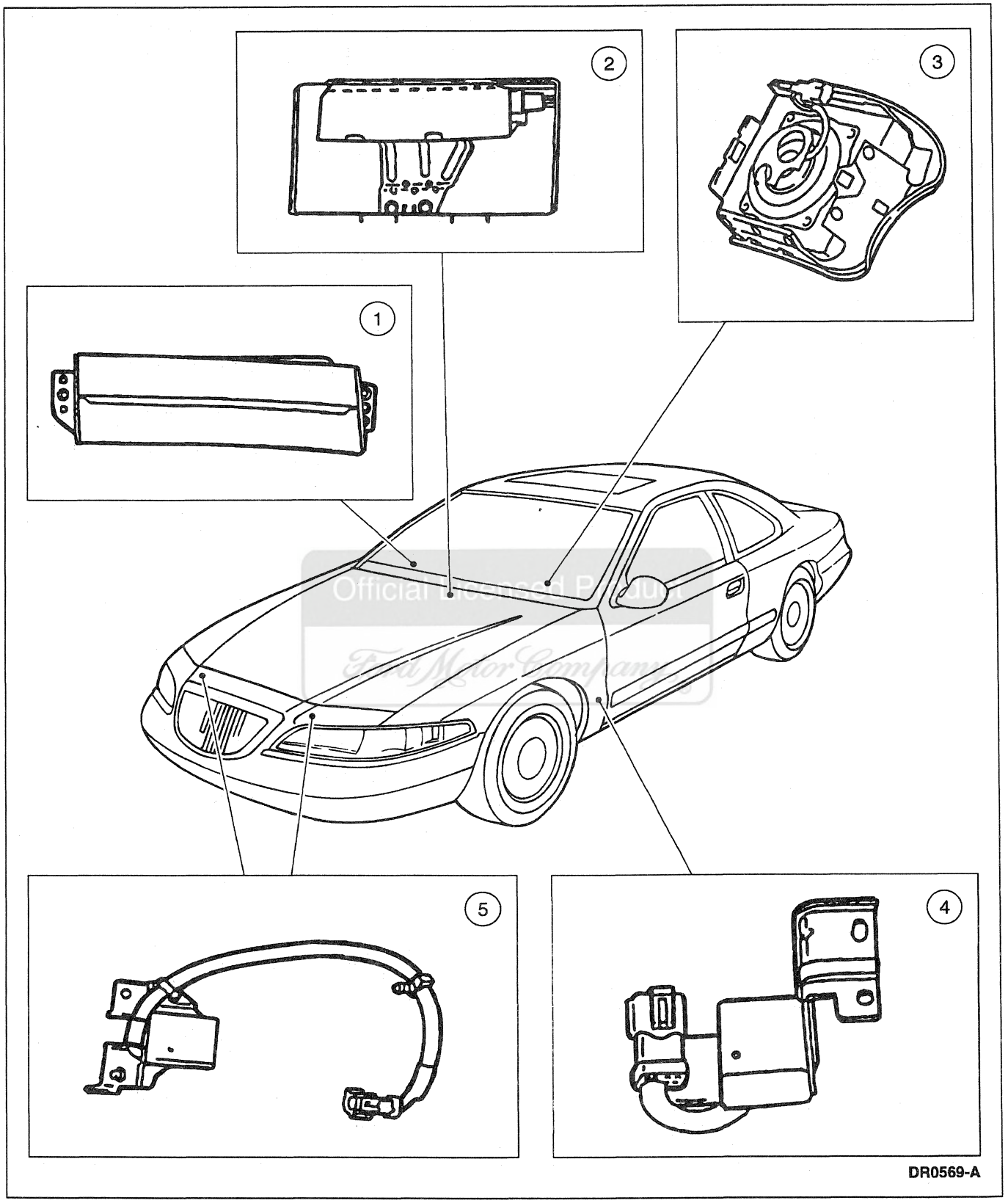

Official Licensed Product
Ford Motor Company

DESCRIPTION AND OPERATION (Continued)

Item	Part Number	Description
1	044A74	Passenger Air Bag Module
2	14B056	Air Bag Diagnostic Monitor
3	043B13	Driver Air Bag Module
4	14B007	Rear Air Bag Sensor and Bracket
5	14B004	Front Air Bag Sensor and Bracket

(Continued)

Air Bag Module — Driver

The driver air bag module:

- is replaced as an assembly.
- is mounted in the center of the steering wheel (3600).

Driver Air Bag Module

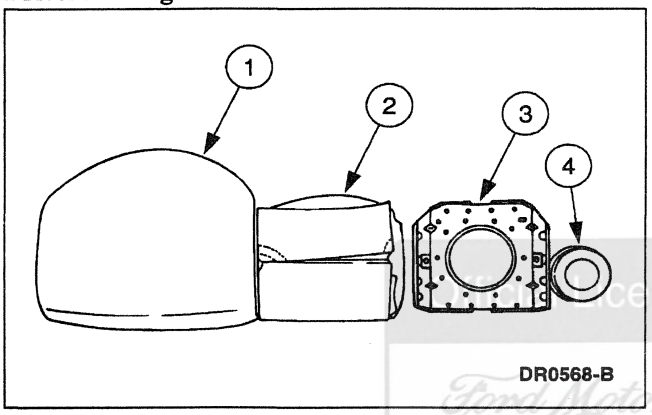

Item	Part Number	Description
1	—	Steering Wheel Trim Cover (Part of 043B13)
2	—	Air Bag (Part of 043B13)
3	—	Mounting Plate and Retainer Ring (Part of 043B13)
4	—	Inflator (Part of 043B13)

Steering Wheel Trim Cover

The steering wheel trim cover:

- encases the driver air bag module and horn switch.
- has tear seams that separate to allow inflation of the air bag.
- must not be repainted for any reason.
- is a component of the driver air bag module and is not repaired separately.

Air Bag

The air bag:

- is constructed of nylon.
- is a component of the driver air bag module and is not replaced separately.

Inflator

The inflator:

- receives electrical energy when the air bag sensors close.
- contains an igniter that converts the electrical signal to thermal energy (heat), causing the ignition of the inflator gas generant.
- inflates the air bag with nitrogen gas after the chemical reaction takes place.
- is a component of the driver air bag module and is not replaced separately.

Mounting Plate and Retainer Ring

The mounting plate and retainer ring:

- attach and seal the air bag to the inflator.
- attach the trim cover.
- mount the entire driver air bag module to the steering wheel.
- are components of the driver air bag module and are not replaced separately.

Air Bag Sliding Contact

The air bag sliding contact (14A664) :

- is mounted on the steering column tube (3514), behind the steering wheel.
- continuously transfers electrical signals from the driver air bag module to the air bag sensors.

Ford Motor Company Licensed Product

DESCRIPTION AND OPERATION (Continued)

Air Bag Module — Passenger

The passenger air bag module:

- is replaced as an assembly.
- is mounted in the RH side of the instrument panel (04320).

Passenger Air Bag Module

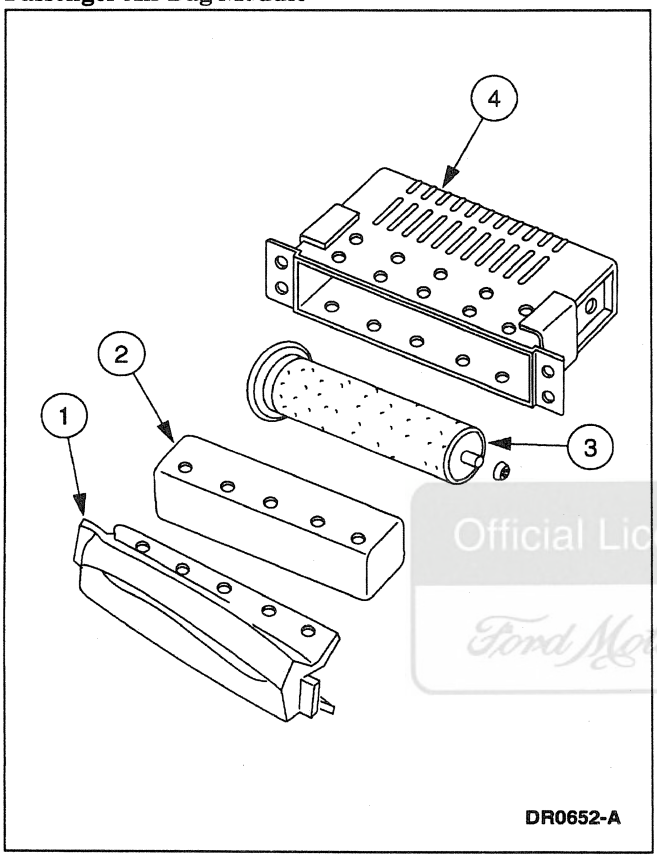

Item	Part Number	Description
1	—	Deployment Door (Part of 044A74)
2	—	Air Bag (Part of 044A74)
3	—	Inflator (Part of 044A74)
4	—	Reaction Housing (Part of 044A74)

Deployment Door

The deployment door:

- is textured and painted to match the surface of the instrument panel.
- has a tear seam that separates when the air bag inflates, and hinges out of the way during deployment.
- retains the air bag in the reaction housing until deployment.
- must not be repainted for any reason.
- is a component of the passenger air bag module and is not replaced separately.

Air Bag

The air bag:

- is constructed of nylon.
- is a component of the passenger air bag module and is not replaced separately.

Inflator

The inflator:

- receives electrical energy when the air bag sensors close.
- contains an igniter that converts the electrical signal to thermal energy (heat), causing the ignition of the inflator gas generant.
- inflates the air bag with nitrogen after the chemical reaction takes place.
- is a component of the passenger air bag module and is not replaced separately.

Reaction Housing

The reaction housing:

- provides support for the inflator.
- provides a reaction surface for the passenger air bag module.
- is used to attach the deployment door.
- contains mounting brackets that attach the passenger air bag module to the instrument panel.
- is a component of the passenger air bag module and is not replaced separately.

Air Bag Diagnostic Monitor

The air bag diagnostic monitor (14B056) continually monitors all air bag supplemental restraint system (SRS) components and wiring connections for possible faults in the system. If the air bag diagnostic monitor detects a fault in the SRS when the ignition switch (11572) is in the RUN position, a lamp fault code (LFC) will be displayed by the air bag indicator, located on the instrument cluster (10849) .

Official Licensed Product
Ford Motor Company

DESCRIPTION AND OPERATION (Continued)

The air bag diagnostic monitor does not deploy the air bag in the event of a collision. The LH or RH air bag sensor and the safing sensor determine when to deploy the air bag.

The air bag diagnostic monitor illuminates the air bag indicator for approximately six seconds when the ignition switch is in the RUN position and then turns the indicator off. This shows that the air bag indicator is operational. If the air bag indicator does not illuminate or the indicator stays on or flashes at any time, a fault has been detected by the air bag diagnostic monitor.

LFCs may not be displayed for approximately 16 seconds after the ignition switch is placed in the RUN position. This is the amount of time the air bag diagnostic monitor requires to perform all tests and verify system faults.

Each LFC (a series of flashes and pauses of the air bag indicator):

- represents a two-digit number.
- is always displayed at least twice.

If the air bag diagnostic monitor detects a fault in the SRS, a diagnostic trouble code (DTC) will be written to the air bag diagnostic monitor non-volatile RAM (NVRAM). This DTC will then cause the air bag diagnostic monitor to flash an LFC on the air bag indicator. DTCs can be retrieved with the New Generation Star (NGS) Tester. After repair, the DTC can then be cleared from the NVRAM.

If a system fault is present and the air bag indicator is malfunctioning, an audible chime will be heard. The chime is a series of five sets of five tone bursts. If the chime is heard, the SRS requires repair.

If a fault exists that makes unwanted air bag deployment possible, the air bag diagnostic monitor has an internal thermal fuse that will blow automatically.

If the internal thermal fuse has blown, all power to the air bag deployment circuit is removed and the air bag indicator will flash the appropriate LFC to indicate the suspect circuit.

LFCs are prioritized numerically. If two or more faults occur at the same time, the fault having the highest priority will be displayed first. After that fault has been corrected, the next highest priority fault will be displayed.

The air bag diagnostic monitor includes an internal backup power supply. This feature provides sufficient backup power to deploy the air bag in the event the battery (10655) or battery cables are damaged in a collision before safing and air bag sensors close. The backup power supply will deplete its stored energy approximately one minute after the battery ground cable (14301) is disconnected.

Electrical System

The electrical system that supports the air bag supplemental restraint system (SRS):

- is powered directly from the battery.
- can function with the ignition switch in any position, including OFF and LOCK.
- can function when the front seat is unoccupied.
- detects impacts.
- supplies electrical power to the igniters.
- monitors the system to determine system readiness.

Sensors

⚠ WARNING: VEHICLE SENSOR ORIENTATION IS CRITICAL FOR PROPER SYSTEM OPERATION. IF A VEHICLE EQUIPPED WITH AN AIR BAG SUPPLEMENTAL RESTRAINT SYSTEM (SRS) HAS BEEN INVOLVED IN A COLLISION WHERE THE RADIATOR GRILLE OPENING PANEL, FRAME RAILS, OR COWL PANELS HAVE BEEN DAMAGED, INSPECT THE SENSOR MOUNTING BRACKETS FOR DEFORMATION. IF DAMAGED, THE SENSOR SHOULD BE REPLACED WHETHER OR NOT THE AIR BAGS ARE DEPLOYED. IN ADDITION, MAKE SURE THE AREA OF THE SENSOR MOUNTING IS RESTORED TO ITS ORIGINAL CONDITION.

NOTE: Undamaged air bag sensors will reset automatically after a collision and can be reused.

The air bag supplemental restraint system (SRS) contains the following three sensors.

- LH air bag sensor and bracket.
- RH air bag sensor and bracket.
- Safing sensor and bracket.

At least two sensors (one air bag sensor and the safing sensor) must be closed to inflate the air bag.

DIAGNOSIS AND TESTING

Air Bag Supplemental Restraint System (SRS)

Refer to Electrical and Vacuum Troubleshooting Manual, Cell 46, Air Bags for schematic and connector information.

Special Tool(s)

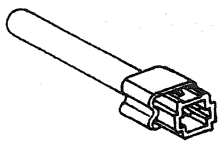 ST1590-A	Air Bag Simulator 418-F088 (105-R0012) or Equivalent

Diagnosing Customer Concerns Without Hard Diagnostic Trouble Codes

If a lamp fault code (LFC) is reported by the customer but is not present when the vehicle comes in for service, pinpoint diagnostics cannot be used. Following the pinpoint tests when the LFC is not flashing will result in needless replacement of the air bag system components and repeat service.

The air bag diagnostic monitor (14B056) does not contain any memory of the LFC after the ignition switch is turned to OFF.

If the LFC is unknown, instruct the customer on how to count an LFC. Demonstrate an LFC by disconnecting the RH primary crash front air bag sensor and bracket (14B004) or LH primary crash front air bag sensor and bracket (14B005), turn the ignition switch to RUN, and allow the customer to count the LFC. Reconnect the RH primary crash front air bag sensor and bracket or the LH primary crash front air bag sensor and bracket and instruct the customer to return when the LFC is known.

Once the LFC is known, study the electrical schematic and determine the location of components that are involved in creating that LFC. Perform a thorough visual inspection of components, connectors, splices and wiring harnesses, looking for pinched wires, worn insulation on conductors, opens, shorts or loosely mounted sensors.

Diagnosing Customer Concerns With Hard Diagnostic Trouble Codes (DTCs)

Most air bag supplemental restraint system (SRS) diagnostic procedures will require the use of the deactivation and reactivation procedures in this section. These procedures require the removal of the driver air bag module and passenger air bag module, thereby removing the risk of air bag deployment while diagnostics are performed.

Air bag simulators are required to perform diagnosis and testing of the (SRS). The air bag simulator is a 2-ohm resistor used to simulate air bag module connections to the system. It is not acceptable to short-circuit the air bag module connections with a zero ohm jumper wire. If a zero ohm jumper wire is used to short-circuit the air bag module connections, lamp fault code (LFC) will be displayed.

Deactivation Procedure

1. Record USER 1 and USER 2 preset radio frequencies.
2. **WARNING: TO AVOID ACCIDENTAL DEPLOYMENT AND POSSIBLE PERSONAL INJURY, THE BACKUP POWER SUPPLY MUST BE DEPLETED BEFORE REPAIRING OR REPLACING ANY AIR BAG SUPPLEMENTAL RESTRAINT SYSTEM (SRS) COMPONENTS. TO DEPLETE THE BACKUP POWER SUPPLY ENERGY, DISCONNECT THE BATTERY GROUND CABLE AND WAIT ONE MINUTE. BE SURE TO DISCONNECT AUXILIARY BATTERIES AND POWER SUPPLIES (IF SO EQUIPPED).**

   Disconnect the battery ground cable (14301); refer to Section 414-01.
3. Wait one minute for the backup power supply in the air bag diagnostic monitor to deplete its stored energy.

Ford Motor Company Official Licensed Publication

DIAGNOSIS AND TESTING (Continued)

4. **WARNING: CARRY A LIVE AIR BAG MODULE WITH THE AIR BAG AND TRIM COVER POINTED AWAY FROM YOUR BODY. THIS WILL REDUCE THE RISK OF INJURY IN THE EVENT OF AN ACCIDENTAL DEPLOYMENT.**

   WARNING: DO NOT SET A LIVE AIR BAG MODULE DOWN WITH THE TRIM COVER FACE DOWN.

   Remove the driver air bag module from the vehicle; refer to Module — Driver Air Bag in this section.
5. Connect the air bag simulator to the vehicle harness at the top of the steering column.
6. **WARNING: CARRY A LIVE AIR BAG MODULE WITH THE AIR BAG AND DEPLOYMENT DOOR POINTED AWAY FROM YOUR BODY. THIS WILL REDUCE THE RISK OF INJURY IN THE EVENT OF AN ACCIDENTAL DEPLOYMENT.**

   WARNING: DO NOT SET A LIVE AIR BAG MODULE DOWN WITH THE DEPLOYMENT DOOR FACE DOWN.

   Remove the passenger air bag module from the vehicle; refer to Module — Passenger Air Bag in this section.
7. Connect the Air Bag Simulator to the vehicle harness.
8. Reconnect the battery ground cable; refer to Section 414-01.

Reactivation Procedure

1. **WARNING: THE AIR BAG SIMULATORS MUST BE REMOVED AND THE AIR BAG MODULES RECONNECTED WHEN THE SYSTEM IS REACTIVATED TO AVOID NON-DEPLOYMENT IN A COLLISION RESULTING IN POSSIBLE PERSONAL INJURY.**

   Disconnect the battery ground cable; refer to Section 414-01.
2. Wait one minute for the backup power supply in the air bag diagnostic monitor to deplete its stored energy.
3. Remove the air bag simulator from the vehicle harness connector at the top of the steering column.
4. **WARNING: CARRY A LIVE AIR BAG MODULE WITH THE AIR BAG AND TRIM COVER POINTED AWAY FROM YOUR BODY. THIS WILL REDUCE THE RISK OF INJURY IN THE EVENT OF AN ACCIDENTAL DEPLOYMENT.**

   Install the driver air bag module; refer to Module — Driver Air Bag in this section.
5. Remove the Air Bag Simulator from the vehicle harness connector at the passenger air bag module.
6. **WARNING: CARRY A LIVE AIR BAG MODULE WITH THE AIR BAG AND DEPLOYMENT DOOR POINTED AWAY FROM YOUR BODY. THIS WILL REDUCE THE RISK OF INJURY IN THE EVENT OF AN ACCIDENTAL DEPLOYMENT.**

   Install the passenger air bag module; refer to Module — Passenger Air Bag in this section.
7. Reconnect the battery ground cable; refer to Section 414-01.
8. Prove out the system.

Ford Motor Company Licensed Product

Glossary

Air Bag Simulator

Air bag simulators are used to simulate air bag module connections to the system.

Disconnect the Component

Disconnect the component means disconnect the component harness connector. It does not mean remove the component. Do not reconnect a disconnected component unless instructed to do so.

Deactivate the System

Deactivate the system means to perform the deactivation procedure; refer to Deactivation Procedure in this section.

DIAGNOSIS AND TESTING (Continued)

Prove Out the System

Prove out the system means to turn the ignition switch (11572) from the OFF to the RUN position and visually monitor the air bag indicator with the air bag modules installed. The air bag indicator will light continuously for approximately six seconds and then turn off. If an air bag supplemental restraint system (SRS) fault is present, the air bag indicator will either:

- fail to light.
- remain lit continuously.
- flash.

The flashing may not occur until approximately 16 seconds after the ignition switch has been turned from the OFF to the RUN position. This is the time required for the air bag diagnostic monitor to complete the testing of the SRS. If the air bag indicator is inoperative and an SRS fault exists, a chime will sound in a pattern of five sets of five beeps. If this occurs, the air bag indicator will need to be repaired before diagnosis can continue.

Reactivate the System

Reactivate the system means to perform the reactivation procedure; refer to Reactivation Procedure in this section.

Reconnect the System

Reconnect the system means to reconnect all system components; refer to Air Bag System Reconnect Checklist in this section.

Replace the Component

Replace the component means to remove the existing component and replace it with an authorized replacement part obtained from Ford Customer Service Division.

Verify the System

Verify the system means to prove out the system with air bag simulators for air bag modules in place of the components.

Air Bag System Reconnect Checklist

The checklist below should be completed following diagnosis or repair of any air bag system concern:

1. Are all air bag sensors connected and mounted to the vehicle?
2. Is the three-way connector at the base of the steering column connected?
3. Are the air bag modules or air bag simulators connected?
4. Is the air bag diagnostic monitor connected?
5. Is the vehicle battery connected?

Official Licensed Product
Ford Motor Company

Diagnostic Instructions — Air Bag Supplemental Restraint System (SRS)

Air Bag Diagnostic Monitor Lamp Fault Code (LFC) Priority Table

LFC	Description	Action To Take
—	No air bag indicator—inoperative lamp circuit or no ignition voltage to air bag diagnostic monitor	GO to Pinpoint Test A.
—	Continuous air bag indicator—air bag diagnostic monitor disconnected or inoperative	GO to Pinpoint Test B.
12	Low battery voltage	GO to Pinpoint Test C.
13	Air bag circuit short to ground	GO to Pinpoint Test D.
14	Primary crash sensor circuit short to ground	GO to Pinpoint Test E.
21	Safing sensor not mounted to vehicle properly	GO to Pinpoint Test F.
22	Safing sensor output circuit short to battery	GO to Pinpoint Test G.
23	Safing sensor input feed/return circuit open	GO to Pinpoint Test H.
24	Safing sensor output feed/return circuit open	GO to Pinpoint Test I.
32	Driver air bag circuit high resistance or open	GO to Pinpoint Test J.
33	Passenger air bag high resistance or open	GO to Pinpoint Test K.
34	Driver air bag circuit low resistance or short	GO to Pinpoint Test L.

(Continued)

DIAGNOSIS AND TESTING (Continued)

Air Bag Diagnostic Monitor Lamp Fault Code (LFC) Priority Table

LFC	Description	Action To Take
35	Passenger air bag circuit low resistance or short	GO to Pinpoint Test M.
41	RH primary crash sensor feed/return circuit open	GO to Pinpoint Test N.
42	LH primary crash sensor feed/return circuit open	GO to Pinpoint Test O.
44	RH primary crash sensor not mounted to vehicle properly	GO to Pinpoint Test P.
45	LH primary crash sensor not mounted to vehicle properly	GO to Pinpoint Test Q.
51	Air bag diagnostic monitor internal thermal fuse—fuse open due to intermittent short to ground	GO to LFC 51 — Air Bag Diagnostic Monitor Internal Thermal Fuse — Fuse Open Due to Intermittent Short to Ground.
52	Backup power supply—voltage boost fault	GO to Pinpoint Test R.
53	Primary crash sensor circuits resistance to ground or air bag diagnostic monitor fault	GO to Pinpoint Test S.
—	Rapid continuous flashing of air bag indicator (No LFC) all primary crash sensors disconnected	GO to Rapid Continuous Flashing of Air Bag Indicator (No LFC)—All Primary Crash Sensors Disconnected

Inspection and Verification

1. Verify the customer concern by checking the air bag indicator in the instrument cluster. Refer to Prove Out the System in this section.
2. Visually inspect for obvious signs of mechanical and electrical damage using the following chart:

Visual Inspection Chart

Mechanical	Electrical
• Damaged air bag diagnostic monitor bracket • Loosely mounted air bag sensors	• Blown fuse(s) • Damaged wiring harness • Loose or corroded connectors • Circuitry open/shorted

Official Licensed Product Ford Motor Company

3. If LFCs are retrieved; refer to the Air Bag Diagnostic Monitor Lamp Fault Code (LFC) Priority Table.

Symptom Chart

Symptom Chart

Condition	Possible Source	Action
• No Air Bag Indicator or Inoperative Lamp Circuit	• Circuit(s). • Air bag diagnostic monitor. • Bulb.	• GO to Pinpoint Test A.
• Continuous Air Bag Indicator	• Circuit(s). • Air bag diagnostic monitor. • Instrument cluster.	• GO to Pinpoint Test B.
• Rapid Continuous Flashing of Air Bag Indicator; No LFC	• Circuit(s). • Air bag diagnostic monitor.	• GO to Rapid Continuous Flashing of Air Bag Indicator (No LFC) — All Primary Crash Sensors Disconnected.

DIAGNOSIS AND TESTING (Continued)

Pinpoint Tests — Air Bag Supplemental Restraint System (SRS)

Special Tool(s)

ST1137-A	73 Digital Multimeter 105-R0051 or Equivalent
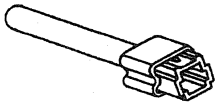 ST1630-A	Air Bag Simulator 418-F088 (105-R0012) or Equivalent

Do not perform any pinpoint test unless directed by the air bag diagnostic monitor lamp fault code (LFC) priority table or symptom chart.

Pinpoint Test A: No Air Bag Indicator — Inoperative Lamp Circuit or No Ignition Voltage to Air Bag Diagnostic Monitor

Normal Operation

The air bag warning indicator is designed to light for 6 ±2 seconds when the ignition switch is turned to RUN. This initial six seconds of air bag warning indicator illumination (continuous lamp) is considered normal operation and is called prove out of the air bag warning indicator.

The air bag diagnostic monitor requires power at Pin C277-1, Circuit 49 (O) in order to energize the air bag indicator circuit. If the air bag warning indicator circuit is open or if the air bag diagnostic monitor does not have ignition voltage at Pin C277-1, Circuit 49 (O) the air bag warning indicator will not light.

If the computer in the air bag diagnostic monitor detects an open in the air bag warning indicator lamp circuit and, if another system fault exists, then the air bag diagnostic monitor will turn on its internal tone generator (beeper). The beep pattern is five sets of five beeps. The pattern is repeated every 30 minutes while the ignition switch is in RUN. The five beeps do not indicate a code five or any other code. The air bag warning indicator lamp circuitry must be serviced before the diagnostic trouble code can be read.

Possible Causes

A no air bag indicator condition can be caused by:

- a burned-out bulb or open wiring in the air bag warning indicator circuit.
- loss of ignition voltage at Pin C277-1, Circuit 49 (O).

Ford Motor Company Licensed Product

PINPOINT TEST A: NO AIR BAG INDICATOR — INOPERATIVE LAMP CIRCUIT OR NO IGNITION VOLTAGE TO AIR BAG DIAGNOSTIC MONITOR

TEST CONDITIONS	TEST DETAILS/RESULTS/ACTIONS
A1 CHECK FOR IGNITION VOLTAGE	
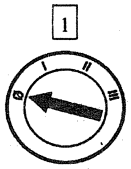 1	2 Deactivate the system.

(Continued)

DIAGNOSIS AND TESTING (Continued)

PINPOINT TEST A: NO AIR BAG INDICATOR — INOPERATIVE LAMP CIRCUIT OR NO IGNITION VOLTAGE TO AIR BAG DIAGNOSTIC MONITOR (Continued)

TEST CONDITIONS	TEST DETAILS/RESULTS/ACTIONS
A1 CHECK FOR IGNITION VOLTAGE (Continued)	
3 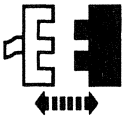 4 Air Bag Diagnostic Monitor C276 and C277 5 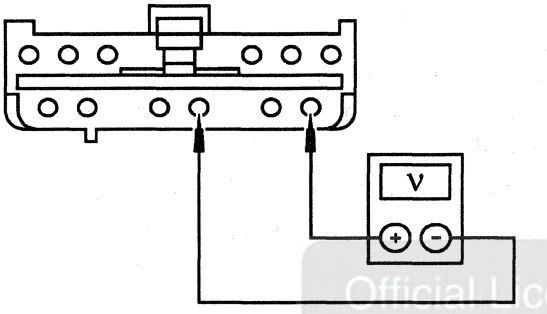 DR0572-A	5 Measure the voltage between Pin C277-1, Circuit 49 (O) and Pin 277-3, Circuit 57 (BK). • Is the voltage greater than 10 volts? → **Yes** GO to **A2.** → **No** REPAIR Circuit 49 (O). CHECK for proper ground on Pin C277-3, Circuit 57 (BK). RECONNECT the system. VERIFY the system. REACTIVATE the system.
A2 CHECK CIRCUIT 608 (BK/Y) FOR AN OPEN	
	1 Make sure the air bag diagnostic monitor is disconnected and the key is in the RUN position. • Is the air bag indicator illuminated? → **Yes** REPLACE the air bag diagnostic monitor. RECONNECT the system. VERIFY the system. REACTIVATE the system. → **No** REPAIR Circuit 608 (BK/Y). CHECK for burned out bulb, blown instrument panel fuse panel Fuse 15, open connections and pushed-out pins. RECONNECT the system. VERIFY the system. REACTIVATE the system.

Official Licensed Product Ford Motor Company

DIAGNOSIS AND TESTING (Continued)

Pinpoint Test B: Continuous Air Bag Indicator — Air Bag Diagnostic Monitor Disconnected or Inoperative

Normal Operation

The air bag warning indicator is designed to illuminate for 6 ± 2 seconds when the ignition switch is turned to RUN. This initial six seconds of air bag warning indicator illumination (continuous lamp) is considered normal operation and is called prove out of the air bag warning indicator. If the air bag diagnostic monitor detects any faults in the air bag system following prove out, it will flash the air bag warning indicator a series of times to indicate the diagnostic trouble code that has been detected. If the air bag warning indicator comes on when the ignition switch is turned to RUN and stays on for more than eight seconds continuously, a fault exists in the air bag warning indicator circuit.

The air bag diagnostic monitor incorporates a solid state circuit that shorts the air bag warning indicator Circuit 608 (BK/Y) to ground to turn the air bag warning indicator on. When the gray air bag diagnostic monitor harness connector is disconnected from the air bag diagnostic monitor, a shorting bar within the harness connector connects Pins C277-4, Circuit 608 (BK/Y) (air bag warning indicator) and C277-5, Circuit 57 (BK) (ground) together. The shorting bar will turn the air bag warning indicator on whenever the gray air bag diagnostic monitor harness connector is disconnected. Because the shorting bar makes a continuous connection between Pins C277-4, Circuit 608 (BK/Y) and C277-5, Circuit 57 (BK) when the connector is disconnected, the air bag warning indicator will not flash—instead, it will glow continuously.

When the ignition switch is turned to RUN, the air bag diagnostic monitor wakes up and, after approximately six seconds, turns the air bag warning indicator off. If the air bag diagnostic monitor fails to wake up, the lamp driver circuit will automatically turn the air bag warning indicator on continuously, indicating a concern in the air bag diagnostic monitor or at the gray air bag diagnostic monitor connector.

Possible Causes

Continuous illumination of the air bag warning indicator can be caused by:

- a disconnected or poorly connected air bag diagnostic monitor that may not push the shorting bar between Pins C277-4, Circuit 608 (BK/Y) and C277-5, Circuit 57 (BK) into its fully-retracted position. This shorts the air bag warning indicator line to ground and causes the air bag warning indicator to glow continuously.
- shorted air bag warning indicator wiring.
- a damaged air bag diagnostic monitor.

Ford Licensed Product Ford Motor Company

PINPOINT TEST B: CONTINUOUS AIR BAG INDICATOR — AIR BAG DIAGNOSTIC MONITOR DISCONNECTED OR INOPERATIVE

TEST CONDITIONS	TEST DETAILS/RESULTS/ACTIONS
B1 CHECK FOR IGNITION VOLTAGE	
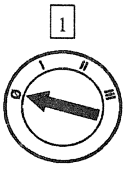	[2] Deactivate the system.

(Continued)

DIAGNOSIS AND TESTING (Continued)

PINPOINT TEST B: CONTINUOUS AIR BAG INDICATOR — AIR BAG DIAGNOSTIC MONITOR DISCONNECTED OR INOPERATIVE (Continued)

TEST CONDITIONS	TEST DETAILS/RESULTS/ACTIONS
B1 CHECK FOR IGNITION VOLTAGE (Continued)	
	3 Inspect the connectors on the air bag diagnostic monitor. • Are the connectors firmly mated to the air bag diagnostic monitor? → **Yes** GO to **B2**. → **No** FIRMLY MATE the connectors to the air bag diagnostic monitor. RECONNECT the system. VERIFY the system. REACTIVATE the system.
B2 CHECK CIRCUIT 608 (BK/Y) FOR A SHORT TO GROUND	
1 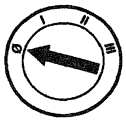 2 Air Bag Diagnostic Monitor C276 and C277 4 	3 Carefully remove the connector locking wedge and shorting bar from C277. • Is the air bag indicator illuminated? → **Yes** REPAIR Circuit 608 (BK/Y). RECONNECT the system. VERIFY the system. REACTIVATE the system. → **No** GO to **B3**.

Critical Licensed Product
Ford Motor Company

(Continued)

DIAGNOSIS AND TESTING (Continued)

PINPOINT TEST B: CONTINUOUS AIR BAG INDICATOR — AIR BAG DIAGNOSTIC MONITOR DISCONNECTED OR INOPERATIVE (Continued)

TEST CONDITIONS	TEST DETAILS/RESULTS/ACTIONS
B3 INSPECT C277 SHORTING BAR	
	1 Inspect the shorting bar on the connector locking wedge of C277. • Is the shorting bar OK? → **Yes** REPLACE the air bag diagnostic monitor. RECONNECT the system. VERIFY the system. REACTIVATE the system. → **No** REPLACE the connector locking wedge on C277. Make sure the replacement is equipped with a shorting bar. RECONNECT the system. VERIFY the system. REACTIVATE the system.

Pinpoint Test C: LFC 12 — Low Battery Voltage

Normal Operation

The air bag diagnostic monitor measures the voltage at Pin C277-13, Circuit 609 (O/Y) of the air bag diagnostic monitor connector. Voltage at Pin C277-13, Circuit 609 (O/Y) should be equal to battery positive (B+). If the voltage measured at Pin C277-13, Circuit 609 (O/Y) drops to less than 9 volts, the diagnostic monitor will flash LFC 12.

Possible Causes

NOTE: If Fuse 6 is open, make sure to diagnose the system for bullet points 1, 2 and 3.

Low battery voltage at air bag diagnostic monitor Pin C277-13, Circuit 609 (O/Y) can be caused by:

- a short to ground in Circuit 611 (W/O) or 612 (P/O) that can result in an open Fuse 6.
- an internal short to ground within the LH cowl panel safing air bag sensor and bracket that can result in an open Fuse 6.
- a short to ground on the battery feed circuit (609 O/Y) between the fuse and Pin C277-13 of the air bag diagnostic monitor that can result in an open Fuse 6.
- a concern in the charging system causing battery voltage to drop below 9 volts.

Ford Motor Company

DIAGNOSIS AND TESTING (Continued)

PINPOINT TEST C: LFC 12 — LOW BATTERY VOLTAGE

TEST CONDITIONS	TEST DETAILS/RESULTS/ACTIONS
C1 CHECK FOR LFC 12	
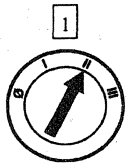	2 Count the Lamp Fault Codes (LFC). • Is LFC 12 flashing? → **Yes** GO to **C2**. → **No** READ the Normal Operation description for this pinpoint test. CHECK for causes of intermittent conditions. DO NOT proceed unless LFC 12 is flashing. Failure to do so can result in unnecessary replacement of SRS components and repeat repair.
C2 CHECK CIRCUIT 609 (O/Y) FOR BATTERY VOLTAGE	
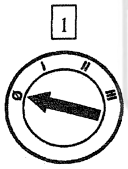 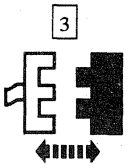 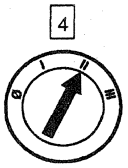 Air Bag Diagnostic Monitor C276 and C277	2 Deactivate the system.

(Continued)

DIAGNOSIS AND TESTING (Continued)

PINPOINT TEST C: LFC 12 — LOW BATTERY VOLTAGE (Continued)

TEST CONDITIONS	TEST DETAILS/RESULTS/ACTIONS
C2 CHECK CIRCUIT 609 (O/Y) FOR BATTERY VOLTAGE (Continued)	
5 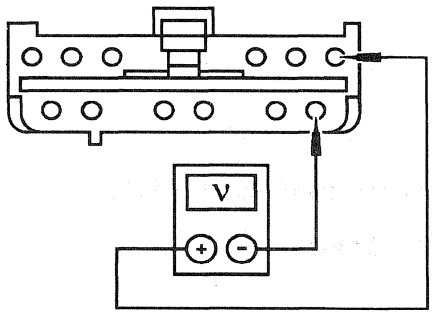 DR0573-A	5 Measure the voltage between Pin C277-13, Circuit 609 (O/Y) and Pin C277-3, Circuit 57 (BK). • Is the voltage greater than 10 volts? → **Yes** REPLACE the air bag diagnostic monitor. RECONNECT the system. VERIFY the system. REACTIVATE the system. → **No** GO to **C3**.
C3 CHECK CIRCUIT 609 (O/Y) FOR AN OPEN	
1 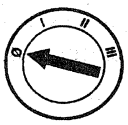 2 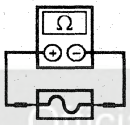 Engine Compartment Fuse Box Fuse 6 (10A)	• Is the engine compartment fuse box Fuse 6 (10A) OK? → **Yes** LOCATE and REPAIR open in Circuit 609 (O/Y). RECONNECT the system. VERIFY the system. REACTIVATE the system. → **No** REPLACE the engine compartment fuse box Fuse 6 (10A). GO to **C4**.

Official Licensed Product
Ford Motor Company

(Continued)

DIAGNOSIS AND TESTING (Continued)

PINPOINT TEST C: LFC 12 — LOW BATTERY VOLTAGE (Continued)

TEST CONDITIONS	TEST DETAILS/RESULTS/ACTIONS
C4 CHECK CIRCUIT 609 (O/Y) FOR A SHORT TO GROUND	
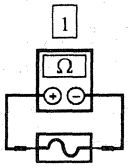 Engine Compartment Fuse Box Fuse 6 (10A)	• Is the engine compartment fuse box Fuse 6 (10A) OK? → **Yes** GO to **C5**. → **No** LOCATE and REPAIR short to ground in Circuit 609 (O/Y). RECONNECT the system. VERIFY the system. REACTIVATE the system.
C5 CHECK FOR A SHORT TO GROUND IN CIRCUIT 611 (W/O) OR 612 (P/O)	
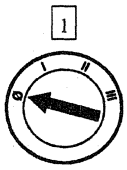 Air Bag Diagnostic Monitor C276 and C277 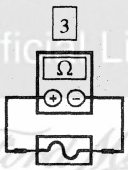 Engine Compartment Fuse Box Fuse 6 (10A)	• Is the engine compartment fuse box Fuse 6 (10A) OK? → **Yes** LOCATE and REPAIR intermittent short to ground in Circuit 609 (O/Y), Circuit 611 (W/O) or Circuit 612 (P/O). CHECK C277 for pinched or bare wires. RECONNECT the system. VERIFY the system. REACTIVATE the system. → **No** LOCATE and REPAIR short to ground in Circuit 611 (W/O) or Circuit 612 (P/O). RECONNECT the system. VERIFY the system. REACTIVATE the system.

Official Licensed Product Ford Motor Company

DIAGNOSIS AND TESTING (Continued)

Pinpoint Test D: LFC 13 — Air Bag Circuit Short to Ground

Normal Operation

NOTE: DTC 13 will flash only while the short to ground is present.

The air bag diagnostic monitor measures the voltage at Pin C276-11, Circuit 614 (GY/O) and Pin C276-12, Circuit 623 (P/W) of the air bag diagnostic monitor connector. The voltage at these pins varies with charging system voltage. If the air bag diagnostic monitor measures a voltage of 2.0 volts or less at Pins C276-11, Circuit 614 (GY/O) and C276-12, Circuit 623 (P/W), the air bag diagnostic monitor will flash LFC 13 to indicate a possible short to ground on these circuits; refer to Possible Causes for additional circuits that may be shorted to ground. When flashing LFC 13, the air bag diagnostic monitor opens its internal thermal fuse. This disables the air bag deployment circuit. If the voltage at Pins C276-11 and C276-12 returns to normal, a LFC 51 will be present due to the open thermal fuse.

Possible Causes

Low voltage at air bag diagnostic monitor Pins C276-11 and C276-12 can be caused by:

- a short to ground within the wiring harness on Circuits 614 (GY/O), 615 (GY/W), 616 (PK/BK) or 623 (P/W), causing the diagnostic voltage to drop.
- an internal short to ground within the air bag sliding contact, causing the driver air bag circuit(s) to be shorted to ground.
- an internal short to ground within the LH kick panel safing rear air bag sensor and bracket, causing Circuit 614 (GY/O) or 623 (P/W) to be shorted to ground.
- an internal short to case ground within the driver or passenger air bag assembly.

PINPOINT TEST D: LFC 13 — AIR BAG CIRCUIT SHORT TO GROUND

TEST CONDITIONS	TEST DETAILS/RESULTS/ACTIONS
D1 CHECK FOR LFC 13	
1	2 Count the Lamp Fault Codes (LFC). • Is LFC 13 flashing? → **Yes** GO to **D2**. → **No** READ the Normal Operation description for this pinpoint test. CHECK the causes of intermittent conditions. DO NOT proceed unless LFC 13 is flashing. Failure to do so can result in unnecessary replacement of SRS components and repeat repair.

(Continued)

DIAGNOSIS AND TESTING (Continued)

PINPOINT TEST D: LFC 13 — AIR BAG CIRCUIT SHORT TO GROUND (Continued)

TEST CONDITIONS	TEST DETAILS/RESULTS/ACTIONS
D2 CHECK CIRCUIT 609 (O/Y) FOR BATTERY VOLTAGE	
NOTE: Never replace the air bag diagnostic monitor when an LFC 13 present unless directed to do so by the pinpoint test.	
1 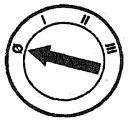	2 Deactivate the system. 3 Verify the system. • Is LFC 13 flashing? → **Yes** GO to **D5.** → **No** GO to **D3.**
D3 CHECK THE AIR BAG MODULES AND THE AIR BAG SLIDING CONTACT	
1 	2 Inspect the air bag modules wiring and connectors. 3 Inspect the air bag sliding contact wiring and connectors. • Is any of the component wiring or connectors damaged? → **Yes** REPLACE the air bag modules or air bag sliding contact as necessary. GO to LFC 51. → **No** GO to **D4.**
D4 CHECK THE AIR BAG MODULES FOR A SHORT TO GROUND	
	1 Make sure that the shorting bars are correctly installed on the driver and passenger air bag module connectors.

(Continued)

DIAGNOSIS AND TESTING (Continued)

PINPOINT TEST D: LFC 13 — AIR BAG CIRCUIT SHORT TO GROUND (Continued)

TEST CONDITIONS	TEST DETAILS/RESULTS/ACTIONS
D4 CHECK THE AIR BAG MODULES FOR A SHORT TO GROUND (Continued)	
2 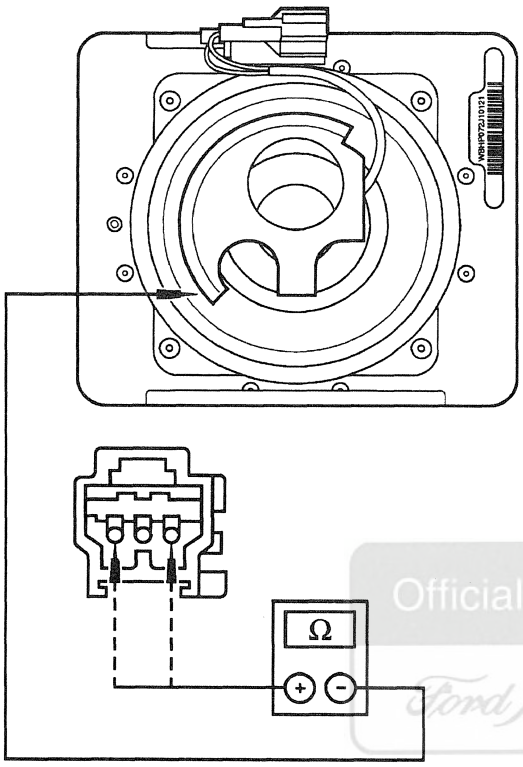 DR0598-A	2 **⚠ WARNING: USE A HAND HELD DIGITAL OHMMETER WITH LESS THAN 10 MA SHORT-CIRCUIT CURRENT ON THE LOWEST RESISTANCE SCALE POSSIBLE (TYPICALLY 200 OHM SETTING). FAILURE TO USE A METER OF THIS TYPE CAN CAUSE PERSONAL INJURY DUE TO AIR BAG DEPLOYMENT.** Measure the resistance between either of the terminals on connector C231 and the driver air bag module mounting plate.

Official Licensed Product
Ford Motor Company

(Continued)

DIAGNOSIS AND TESTING (Continued)

PINPOINT TEST D: LFC 13 — AIR BAG CIRCUIT SHORT TO GROUND (Continued)

TEST CONDITIONS	TEST DETAILS/RESULTS/ACTIONS
D4 CHECK THE AIR BAG MODULES FOR A SHORT TO GROUND (Continued)	
3 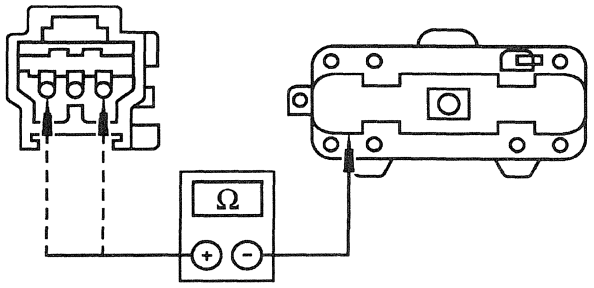 DR0539-A	3 **⚠ WARNING: USE A HAND HELD DIGITAL OHMMETER WITH LESS THAN 10 MA SHORT-CIRCUIT CURRENT ON THE LOWEST RESISTANCE SCALE POSSIBLE (TYPICALLY 200 OHM SETTING). FAILURE TO USE A METER OF THIS TYPE CAN CAUSE PERSONAL INJURY DUE TO AIR BAG DEPLOYMENT.** Measure the resistance between either of the terminals on connector C233 and the passenger air bag module metal case. • Are the resistance readings infinite? → **Yes** If the resistance reading on the driver air bag module was infinite, REPLACE the air bag sliding contact, If the resistance reading on the passenger air bag module was infinite, REPAIR Circuit 614 (GY/O) or Circuit 616 (PK/BK) for a short to ground. GO to LFC 51. → **No** REPLACE the air bag module whose resistance reading was not infinite. GO to LFC 51.
D5 CHECK THE AIR BAG SLIDING CONTACT	
1 2 3 Driver Air Bag Simulator — Air Bag Sliding Contact C230 — Driver Air Bag Simulator	3 Connect the driver air bag simulator to C230. 4 Verify the system. • Is LFC 13 flashing? → **Yes** GO to **D6**. → **No** REPLACE the air bag sliding contact. GO to LFC 51.

(Continued)

Official Licensed Product
Ford Motor Company

DIAGNOSIS AND TESTING (Continued)

PINPOINT TEST D: LFC 13 — AIR BAG CIRCUIT SHORT TO GROUND (Continued)

TEST CONDITIONS	TEST DETAILS/RESULTS/ACTIONS
D6 CHECK FOR SHORT TO GROUND ON CIRCUIT 615 (GY/W) OR CIRCUIT 616 (PK/BK)	
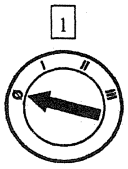 1 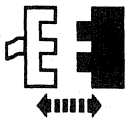 2 Driver Air Bag Simulator 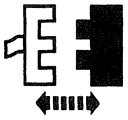 3 Passenger Air Bag Simulator	2 Disconnect the driver air bag simulator from C230. 4 Verify the system. • Is LFC 13 flashing? → **Yes** GO to **D7**. → **No** LOCATE and REPAIR the short to ground in Circuit 615 (GY/W) or Circuit 616 (PK/BK). GO to LFC 51.
D7 CHECK THE AIR BAG SAFING SENSOR CIRCUIT	
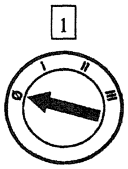 1 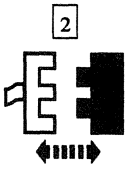 2 Air Bag Safing Sensor C235	3 Verify the system. • Is LFC 13 flashing? → **Yes** LOCATE and REPAIR the short to ground in Circuit 614 (GY/O). GO to LFC 51. → **No** GO to **D8**.

(Continued)

Official Licensed Product
Ford Motor Company

DIAGNOSIS AND TESTING (Continued)

PINPOINT TEST D: LFC 13 — AIR BAG CIRCUIT SHORT TO GROUND (Continued)

TEST CONDITIONS	TEST DETAILS/RESULTS/ACTIONS
D8 CHECK FOR A SHORT TO GROUND ON THE AIR BAG SAFING SENSOR CIRCUIT 614 (GY/O)	
1 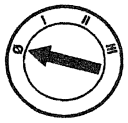 2 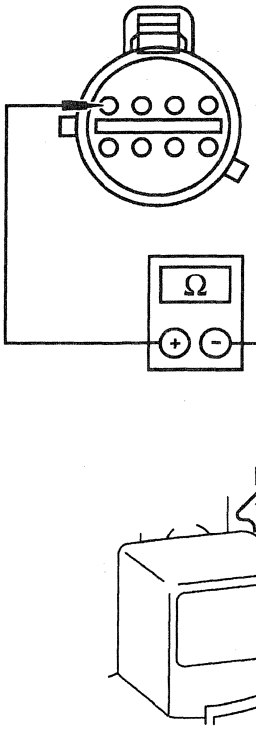 DR0574-A	2 Measure the resistance between Pin C235-1 and the air bag safing sensor case ground. • Is the resistance reading infinite? → **Yes** LOCATE and REPAIR the short to ground in Circuit 623 (P/W). GO to LFC 51. → **No** REPLACE the air bag safing sensor. GO to LFC 51.

Official Licensed Product
Ford Motor Company

DIAGNOSIS AND TESTING (Continued)

Pinpoint Test E: LFC 14 — Primary Crash Sensor Circuit Short to Ground

Normal Operation

NOTE: LFC 14 will flash only while the short to ground is present.

The air bag diagnostic monitor measures the voltage at Pins C277-2, Circuit 624 (Y/W) and C277-6, Circuit 625 (Y/LG) of the air bag diagnostic monitor connector. The normal voltage at these pins is approximately 10 volts (± 1 volt) when the ignition switch is in RUN, or battery positive voltage (B+) when the ignition switch is OFF. If the air bag diagnostic monitor detects that the voltage at Pins C277-2 or C277-6 has dropped to 5 volts or less, the air bag diagnostic monitor will flash LFC 14 on the air bag indicator to indicate a short to ground on any of these circuits; refer to Possible Causes for additional circuits that may be shorted to ground. When flashing LFC 14, the air bag diagnostic monitor opens its internal thermal fuse. This disables the air bag deployment circuit. If the voltage at Pins C277-2 and C277-6 returns to normal, a LFC 51 will be present due to the open thermal fuse.

Possible Causes

NOTE: The gray diagnostic monitor harness connector contains a shorting bar inside the connector that will short Pins C277-2, Circuit 624 (Y/W) and C277-3, Circuit 57 (BK) together whenever the air bag diagnostic monitor is disconnected. Since Pin C277-3 is ground, shorting Pin C277-2 to Pin C277-3 will cause a short to ground on both Pins C277-2 and C277-17. Make sure to remove the plastic locking wedge from the gray harness connector before checking resistance of these circuits to ground.

A drop in voltage at air bag diagnostic monitor Pins C277-2 and C277-6 can be caused by:

- a short to ground within the wiring harness on Circuits 624 (Y/W), 625 (Y/LG), 617 (PK/O) or 619 (PK/W), causing the diagnostic voltage to drop.
- an internal short to case ground within either of the primary crash sensors.

Official Licensed Product Ford Motor Company®

PINPOINT TEST E: LFC 14 — PRIMARY CRASH SENSOR CIRCUIT SHORT TO GROUND

TEST CONDITIONS	TEST DETAILS/RESULTS/ACTIONS
E1 CHECK FOR LFC 14	
1 	2 Count the Lamp Fault Codes (LFC). • Is LFC 14 flashing? → **Yes** GO to **E2**. → **No** READ the Normal Operation description for this pinpoint test. CHECK for causes of intermittent conditions. DO NOT proceed unless LFC 14 is flashing. Failure to do so can result in unnecessary replacement of SRS components and repeat repair.

(Continued)

DIAGNOSIS AND TESTING (Continued)

PINPOINT TEST E: LFC 14 — PRIMARY CRASH SENSOR CIRCUIT SHORT TO GROUND (Continued)

TEST CONDITIONS	TEST DETAILS/RESULTS/ACTIONS
E2 DETERMINE WHICH CIRCUIT IS SHORT TO GROUND	
1 	
	2 Deactivate the system. Leave the battery ground cable disconnected.
3 Air Bag Diagnostic Monitor C276 and C277	
	4 Carefully remove the connector locking wedge and shorting bar from C277.
5 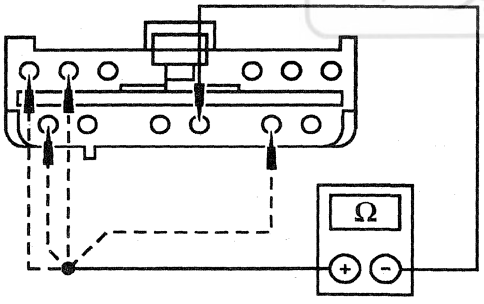 DR0575-A	5 Measure the resistance between Pins C277-2, Circuit 624 (Y/W), C277-6, Circuit 625 (Y/LG), C277-17, Circuit 617 (PK/O) and C277-18, Circuit 619 (PK/W) and Pin C277-3, Circuit 57 (BK). • Are all the resistance readings infinite? → **Yes** INSPECT the shorting bar on C277 for proper operation. INSPECT the plastic fingers in C277 for wear or damage. REPLACE as necessary. GO to LFC 51. → **No** GO to **E3**.
E3 DETERMINE IF THE PRIMARY CRASH SENSOR OR CIRCUIT IS SHORT TO GROUND	
1 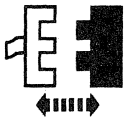 Suspect Primary Crash Sensor C133 or C138	1 Disconnect the suspect primary crash sensor(s) from Step E2.

(Continued)

Official Licensed Product
Ford Motor Company

DIAGNOSIS AND TESTING (Continued)

PINPOINT TEST E: LFC 14 — PRIMARY CRASH SENSOR CIRCUIT SHORT TO GROUND (Continued)

TEST CONDITIONS	TEST DETAILS/RESULTS/ACTIONS
E3 DETERMINE IF THE PRIMARY CRASH SENSOR OR CIRCUIT IS SHORT TO GROUND (Continued)	
2 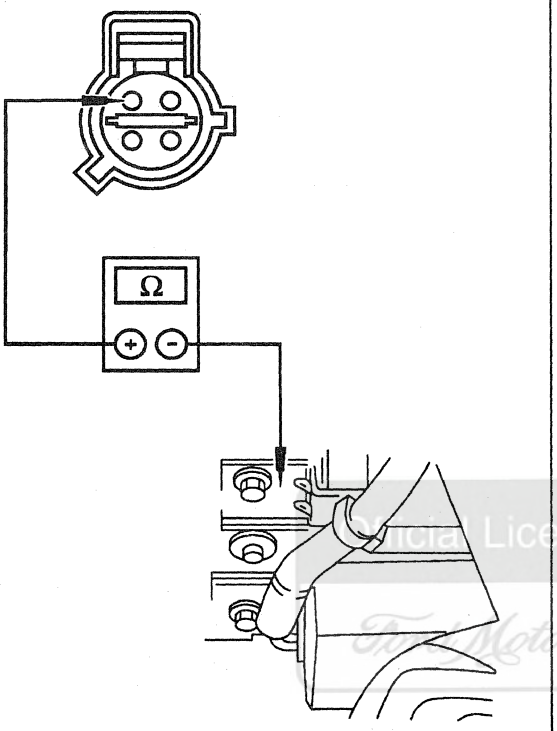 DR0576-A	2 Measure the resistance between C133, Circuit 617 (PK/O) and ground for the RH primary crash sensor, or between C138, Circuit 619 (PK/W) and ground for the LH primary crash sensor. • Is the resistance reading infinite? → **Yes** LOCATE and REPAIR short to ground on Circuit 617 (PK/O) or Circuit 619 (PK/W). GO to LFC 51. → **No** REPLACE the suspect primary crash sensor(s). GO to LFC 51.

Official Licensed Product Ford Motor Company

Pinpoint Test F: LFC 21 — Safing Sensor Not Mounted to Vehicle Properly

Normal Operation

The air bag diagnostic monitor measures the resistance between Pin C277-16, Circuit 613 (DB/W) and Pin C277-3, Circuit 57 (BK), ground. If the air bag diagnostic monitor measures a difference of more than 2.0 ohms between Pin C277-16 and Pin C277-3, it will flash LFC 21 on the air bag indicator.

It is important to note that Circuit 613 (DB/W) is grounded to the side of the safing sensor case, and the case of the safing sensor is grounded to the vehicle in the LH cowl panel. A good ground connection, at both the case and the vehicle body, is important to proper circuit operation.

Possible Causes

High resistance at Pin C277-16, Circuit 613 (DB/W) to ground can be caused by:

- a poor connection due to loose mounting or dirt at the LH cowl panel safing sensor mounting surface.
- an open or damaged wire in Circuit 613 (DB/W) from Pin C277-16 of the air bag diagnostic monitor connector to the LH cowl panel safing sensor.
- an open circuit inside the LH cowl panel safing sensor.

DIAGNOSIS AND TESTING (Continued)

PINPOINT TEST F: LFC 21 — SAFING SENSOR NOT MOUNTED TO VEHICLE PROPERLY

TEST CONDITIONS	TEST DETAILS/RESULTS/ACTIONS
F1 CHECK FOR LFC 21	
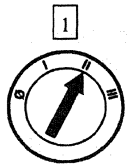 	2 Count the Lamp Fault Codes (LFC). • Is LFC 21 flashing? → **Yes** GO to **F2.** → **No** READ the Normal Operation description for this pinpoint test. CHECK for causes of intermittent conditions. DO NOT proceed unless LFC 21 is flashing. Failure to do so can result in unnecessary replacement of SRS components and repeat repair.
F2 CHECK CIRCUIT 613 (DB/W)	
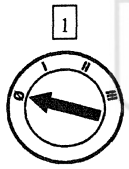 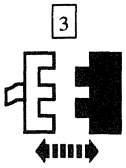 Air Bag Diagnostic Monitor C276 and C277	2 Deactivate the system. Leave the battery ground cable disconnected.

Official Licensed Product
Ford Motor Company

(Continued)

DIAGNOSIS AND TESTING (Continued)

PINPOINT TEST F: LFC 21 — SAFING SENSOR NOT MOUNTED TO VEHICLE PROPERLY (Continued)

TEST CONDITIONS	TEST DETAILS/RESULTS/ACTIONS
F2 CHECK CIRCUIT 613 (DB/W) (Continued)	
4 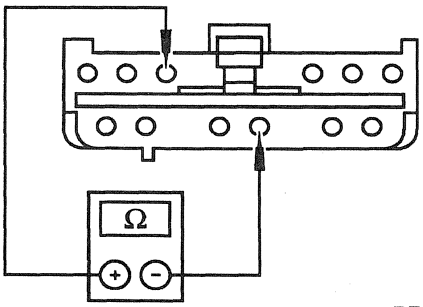 DR0577-A	4 Measure the resistance between Pin C277-16, Circuit 613 (DB/W) and Pin C277-3, Circuit 57 (BK). • Is the resistance greater than 2 ohms? → **Yes** GO to **F3**. → **No** REPLACE the air bag diagnostic monitor. RECONNECT the system. VERIFY the system. REACTIVATE the system.
F3 CHECK CIRCUIT 613 (DB/W) FOR AN OPEN	
1 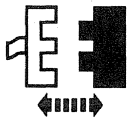 Air Bag Safing Sensor C235	1 Measure the resistance between Pin C235-5, Circuit 613 (DB/W) and the air bag safing sensor case ground. The case ground must be bare and clean.

(Continued)

Official Licensed Product
Ford Motor Company

DIAGNOSIS AND TESTING (Continued)

PINPOINT TEST F: LFC 21 — SAFING SENSOR NOT MOUNTED TO VEHICLE PROPERLY (Continued)

TEST CONDITIONS	TEST DETAILS/RESULTS/ACTIONS
F3 CHECK CIRCUIT 613 (DB/W) FOR AN OPEN (Continued)	
2 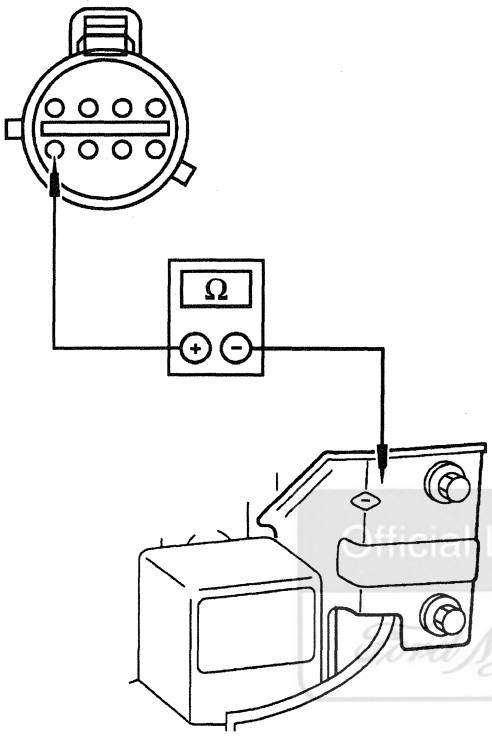 DR0578-A	• Is the resistance greater than 2 ohms? → **Yes** GO to **F4**. → **No** LOCATE and REPAIR the open in Circuit 613 (DB/W). RECONNECT the system. VERIFY the system. REACTIVATE the system.
F4 RECHECK CIRCUIT 613 (DB/W) FOR AN OPEN	
	1 Remove the air bag safing sensor. 2 Clean the air bag safing sensor mounting surface. 3 Install the air bag safing sensor.

(Continued)

DIAGNOSIS AND TESTING (Continued)

PINPOINT TEST F: LFC 21 — SAFING SENSOR NOT MOUNTED TO VEHICLE PROPERLY (Continued)

TEST CONDITIONS	TEST DETAILS/RESULTS/ACTIONS
F4 RECHECK CIRCUIT 613 (DB/W) FOR AN OPEN (Continued)	
4 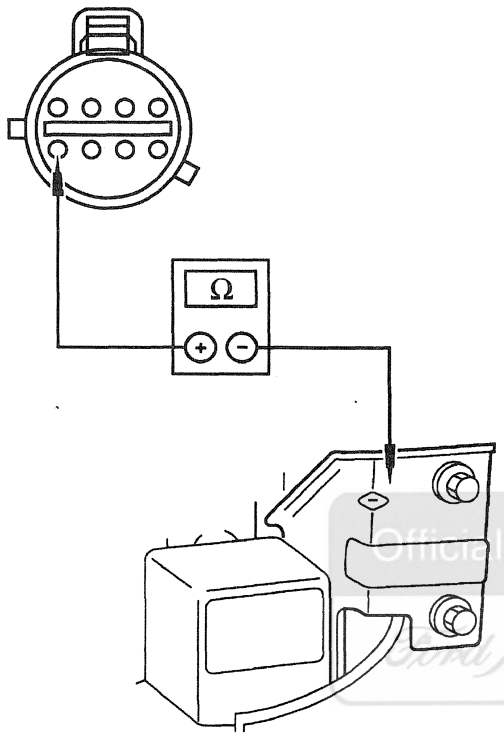 DR0578-A	4 Measure the resistance between Pin C235-5, Circuit 613 (DB/W) and the air bag safing sensor case ground. The case ground must be bare and clean. • Is the resistance greater than 2 ohms? → **Yes** REPLACE the air bag safing sensor. RECONNECT the system. VERIFY the system. REACTIVATE the system. → **No** RECONNECT the system. VERIFY the system. REACTIVATE the system.

Official Licensed Product Ford Motor Company

Pinpoint Test G: LFC 22 — Safing Sensor Output Circuit Short to Battery

Normal Operation

The air bag diagnostic monitor measures voltage at Pins C276-11, Circuit 614 (GY/O) and C276-12, Circuit 623 (P/W). The voltage at these pins is controlled by two resistors inside the air bag diagnostic monitor, and the voltage varies with charging system voltage (the expected voltages at Pins C276-11 and C276-12 are shown in the following table). If the voltage at both of these pins exceeds 5 volts, the air bag diagnostic monitor will flash LFC 22.

DIAGNOSIS AND TESTING (Continued)

Possible Causes

NOTE: The voltage on Circuits 611 (W/O) and 612 (P/O) inside the LH cowl panel safing sensor is usually battery voltage or higher. There should be an open circuit across the contacts of the LH cowl panel safing sensor if the LH cowl panel sensor is operating normally. If the LH cowl panel sensor contacts are closed, the voltage on Circuits 614 (GY/O) and 623 (P/W) will be high (at least battery positive voltage (B+)).

High voltage at Pins C276-11 and C276-12 can be caused by:

- a short in the wiring harness between Circuits 614 (GY/O) or 623 (P/W) and another wire causing high voltage on these circuits.
- **NOTE:** The wiring harness leading to the safing sensor carries higher voltage circuits that may short to Circuits 614 (GY/O) and 623 (P/W).

  a short in the air bag sliding contact between Circuit 614 (GY/O) and some of the horn or speed control wiring.
- a short across the normally open contacts of the LH cowl panel safing sensor.
- vehicle charging system voltage too high. If the generator output voltage is too high (greater than 17 volts), it can cause a LFC 22 to flash.

Charging System Voltage

Pin No.	9.0	9.5	10.0	10.5	11.0	11.5	12.0	12.5	13.0	13.5	14.0	14.5	15.0	15.5	16.0
11	2.3	2.4	2.5	2.7	2.8	3.0	3.1	3.2	3.4	3.5	3.7	3.8	4.0	4.1	4.3
12	2.3	2.4	2.5	2.7	2.8	3.0	3.1	3.2	3.4	3.5	3.7	3.8	4.0	4.1	4.3

PINPOINT TEST G: LFC 22 — SAFING SENSOR OUTPUT CIRCUIT SHORT TO BATTERY

TEST CONDITIONS	TEST DETAILS/RESULTS/ACTIONS
G1 CHECK FOR LFC 22	
1	2 Count the Lamp Fault Codes (LFC). • Is LFC 22 flashing? → **Yes** GO to **G2**. → **No** READ the Normal Operation description for this pinpoint test. CHECK for causes of intermittent conditions. DO NOT proceed unless LFC 22 is flashing. Failure to do so can result in unnecessary replacement of SRS components and repeat repair.

(Continued)

DIAGNOSIS AND TESTING (Continued)

PINPOINT TEST G: LFC 22 — SAFING SENSOR OUTPUT CIRCUIT SHORT TO BATTERY (Continued)

TEST CONDITIONS	TEST DETAILS/RESULTS/ACTIONS
G2 CHECK CIRCUIT 614 (GY/O) FOR BATTERY VOLTAGE	
NOTE: Use the voltage table for normal voltage specification. Voltage should be within ± 0.5 volts.	
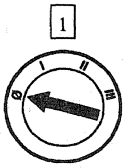 1	
	2 Deactivate the system.
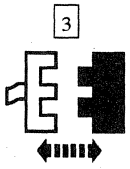 3 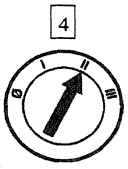 4 Air Bag Diagnostic Monitor C276 and C277	
5	5 Measure the voltage between Pin C276-11, Circuit 614 (GY/O) and Pin C277-3, Circuit 57 (BK). • Is the voltage greater than the specification? → **Yes** GO to **G3**. → **No** REPLACE the air bag diagnostic monitor. RECONNECT the system. VERIFY the system. REACTIVATE the system.
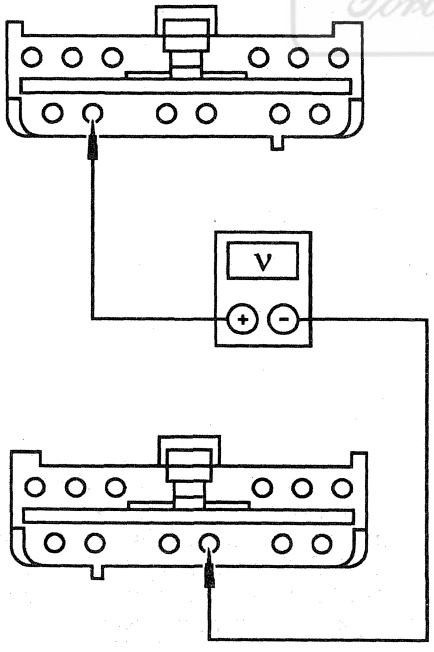 DR0579-A	

(Continued)

DIAGNOSIS AND TESTING (Continued)

PINPOINT TEST G: LFC 22 — SAFING SENSOR OUTPUT CIRCUIT SHORT TO BATTERY (Continued)

TEST CONDITIONS	TEST DETAILS/RESULTS/ACTIONS
G3 DETERMINE WHICH CIRCUIT IS SHORT TO BATTERY	
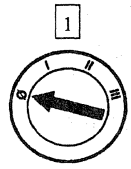 1 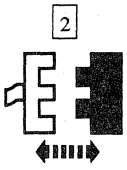 2 Air Bag Safing Sensor C235 3 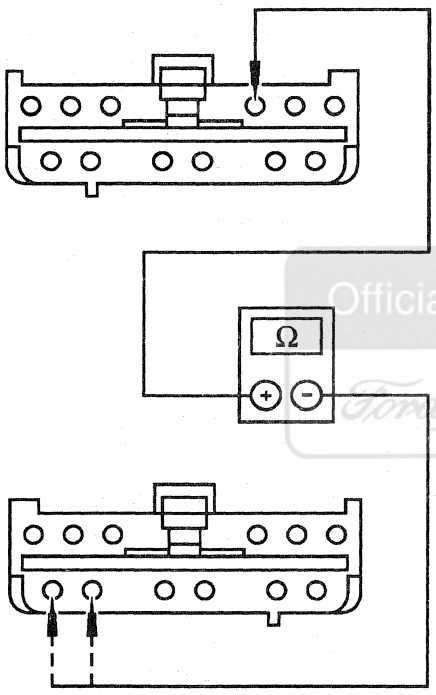 DR0580-A	3 Measure the resistance between Pin C277-15, Circuit 611 (W/O) and Pins C276-11, Circuit 614 (GY/O) and C276-12, Circuit 633 (P/W).

Official Licensed Product
Ford Motor Company

(Continued)

DIAGNOSIS AND TESTING (Continued)

PINPOINT TEST G: LFC 22 — SAFING SENSOR OUTPUT CIRCUIT SHORT TO BATTERY (Continued)

TEST CONDITIONS	TEST DETAILS/RESULTS/ACTIONS
G3 DETERMINE WHICH CIRCUIT IS SHORT TO BATTERY (Continued)	
4 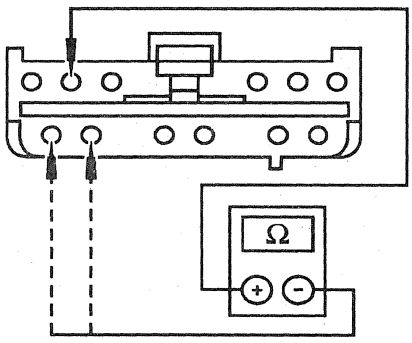 DR0581-A	4 Measure the resistance between Pin C276-23, Circuit 612 (P/O) and Pins C276-11, Circuit 614 (GY/O) and C276-12, Circuit 633 (P/W). • Are all the resistance readings infinite? → **Yes** GO to **G4**. → **No** LOCATE and REPAIR the short between Circuit 611 (W/O) or Circuit 612 (P/O) and Circuit 614 (GY/O), or between Circuit 611 (W/O) or Circuit 612 (P/O) and Circuit 623 (P/O). RECONNECT the system. VERIFY the system. REACTIVATE the system.
G4 CHECK FOR SHORT TO BATTERY IN THE AIR BAG SAFING SENSOR	
1 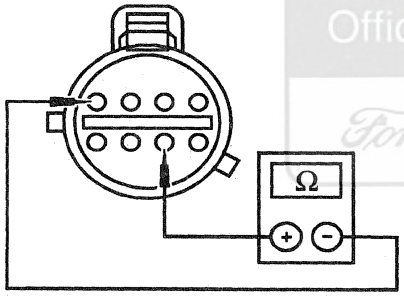 DR0582-A	1 Measure the resistance between Pin C235-7, Circuit 611 (W/O) and Pin C235-1, Circuit 614 (GY/O). • Is the resistance reading infinite? → **Yes** LOCATE and REPAIR the short to battery on Circuit 614 (GY/O), Circuit 615 (W/O), Circuit 616 (PK/BK) or Circuit 623 (P/W). RECONNECT the system. VERIFY the system. REACTIVATE the system. → **No** REPLACE the air bag safing sensor. RECONNECT the system. VERIFY the system. REACTIVATE the system.

Official Licensed Product
Ford Motor Company

DIAGNOSIS AND TESTING (Continued)

Pinpoint Test H: LFC 23 — Safing Sensor Input Feed/Return Circuit Open

Normal Operation

Battery voltage is provided at diagnostic monitor Pin C277-15, Circuit 611 (W/O) at all times. However, voltage at Pin C277-15 can be as high as 25 volts (as provided by the back-up power supply) when the ignition switch is in RUN and the back-up power supply in the air bag diagnostic monitor is charged. Circuit 612 (P/O) is connected to Circuit 611 (W/O) inside the LH cowl panel safing sensor. Therefore, the voltage at Pin C276-23, Circuit 612 (P/O) should be the same as the voltage at Pin C277-15, Circuit 611 (W/O) at all times. The air bag diagnostic monitor compares the voltage available at Pins C277-15 and C276-23. If the voltage at Pin C277-15, Circuit 611 (W/O) is normal and the voltage at Pin C276-23, Circuit 612 (P/O) is low, the air bag diagnostic monitor will flash LFC 23 to indicate an open between these two circuits.

Possible Causes

Low voltage at Pin C276-23 can be caused by:

- an open circuit in the wiring harness in either Circuit 611 (W/O) or 612 (P/O).
- an open circuit inside the LH cowl panel safing sensor across Circuit 611 (W/O) or 612 (P/O).

PINPOINT TEST H: LFC 23 — SAFING SENSOR INPUT FEED/RETURN CIRCUIT OPEN

TEST CONDITIONS	TEST DETAILS/RESULTS/ACTIONS
H1 CHECK FOR LFC 23	
1	2 Count the Lamp Fault Codes (LFC). • Is LFC 23 flashing? → **Yes** GO to **H2**. → **No** READ the Normal Operation description for this pinpoint test. CHECK for causes of intermittent conditions. DO NOT proceed unless LFC 23 is flashing. Failure to do so can result in unnecessary replacement of SRS components and repeat repair.

(Continued)

Official Licensed Product Ford Motor Company

DIAGNOSIS AND TESTING (Continued)

PINPOINT TEST H: LFC 23 — SAFING SENSOR INPUT FEED/RETURN CIRCUIT OPEN (Continued)

TEST CONDITIONS	TEST DETAILS/RESULTS/ACTIONS
H2 CHECK CIRCUITS 611 (W/O) AND 612 (P/O) FOR VOLTAGE	
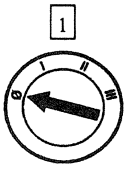 1 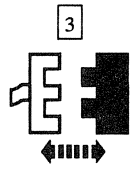 3 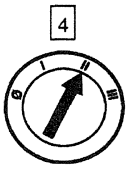 4 Air Bag Diagnostic Monitor C276 and C277 5 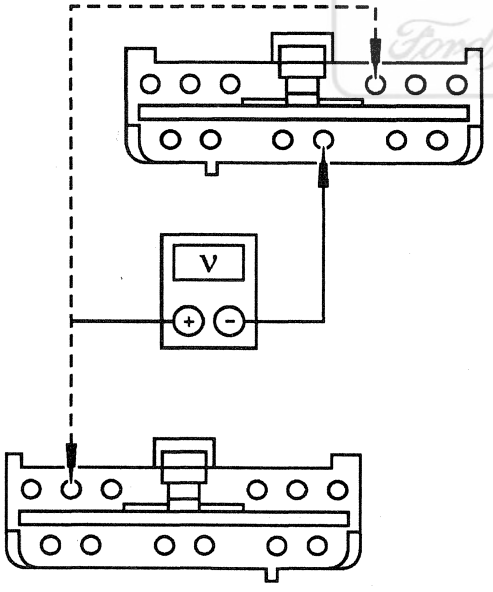 DR0583-A	2 Deactivate the system. 5 Measure the voltage between Pins C277-15, Circuit 611 (W/O) and C276-23, Circuit 612 (P/O) and Pin C277-3, Circuit 57 (BK). • Is the voltage between 23 and 25 volts? → **Yes** REPLACE the air bag diagnostic monitor. RECONNECT the system. VERIFY the system. REACTIVATE the system. → **No** GO to **H3**.

(Continued)

Official Licensed Product Ford Motor Company

DIAGNOSIS AND TESTING (Continued)

PINPOINT TEST H: LFC 23 — SAFING SENSOR INPUT FEED/RETURN CIRCUIT OPEN (Continued)

TEST CONDITIONS	TEST DETAILS/RESULTS/ACTIONS
H3 CHECK CIRCUITS 611 (W/O) AND 612 (P/O) FOR AN OPEN	
1 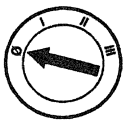 2 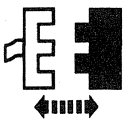 Air Bag Safing Sensor C235 3 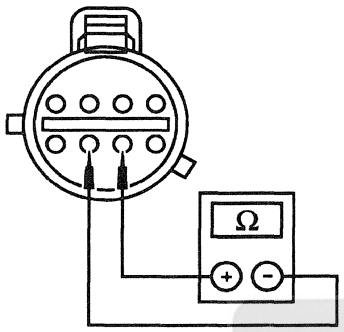 DR0584-A	3 Measure the resistance between Pin C235-7, Circuit 611 (W/O) and Pin C235-6, Circuit 612 (P/O). • Is the resistance less than 2 ohms? → **Yes** LOCATE and REPAIR the open in Circuit 611 (W/O) or Circuit 612 (P/O). RECONNECT the system. VERIFY the system. REACTIVATE the system. → **No** REPLACE the air bag safing sensor. RECONNECT the system. VERIFY the system. REACTIVATE the system.

Official Licensed Product
Ford Motor Company

Pinpoint Test I: LFC 24 — Safing Sensor Output Feed/Return Circuit Open

Normal Operation

The air bag diagnostic monitor tightly controls the voltage at Pin C276-11, Circuit 614 (GY/O) and Pin C276-12, Circuit 623 (P/W) by using two resistors inside the air bag diagnostic monitor. The voltage at Pins C276-11 and C276-12 varies with changes in the vehicle charging system voltage (the expected voltages at Pins C276-11 and C276-12 are shown in the following table). The air bag diagnostic monitor measures the vehicle system charging voltage at Pin C277-13, Circuit 797 (LG/P), B+. By measuring the voltage at Pin C277-13, the air bag diagnostic monitor can accurately predict what the voltage at Pins C276-11 and C276-12 should be in a normally functioning system. The air bag diagnostic monitor measures the voltages at Pins C276-11, Circuit 614 (GY/O) and C276-12, Circuit 623 (P/W) and compares them to the voltage at Pin C277-13, Circuit 797 (LG/P), B+. If the voltages at Pins C276-11 and C276-12 are low in comparison to Pin C277-13 or if the voltage at Pin C276-11 is high and the voltage at Pin C276-12 is low, the air bag diagnostic monitor will flash an LFC 24.

Possible Causes

Low voltage at Pins C276-11 and C276-12 or high voltage at Pin C276-11 and low voltage at Pin C276-12 can be caused by:

- an open circuit or high resistance in the wiring harness in Circuit 614 (GY/O) or 623 (P/W).
- an open circuit or high resistance inside the safing sensor across Circuit 614 (GY/O) and 623 (P/W) wires.
- resistance to ground on Circuit 614 (GY/O) or 623 (P/W). Circuits 614 (GY/O) and 623 (P/W) should be open circuits to ground when the air bag diagnostic monitor is disconnected from the harness. Resistance to ground on these circuits can cause a drop in the diagnostic voltage on both circuits.
- intermittent battery voltage at Pin C277-13 that can cause the reference voltage inside the air bag diagnostic monitor to fluctuate and can cause LFC 24 in some circumstances.

DIAGNOSIS AND TESTING (Continued)

Charging System Voltage

Pin No.	9.0	9.5	10.0	10.5	11.0	11.5	12.0	12.5	13.0	13.5	14.0	14.5	15.0	15.5	16.0
11	2.3	2.4	2.5	2.7	2.8	3.0	3.1	3.2	3.4	3.5	3.7	3.8	4.0	4.1	4.3
12	2.3	2.4	2.5	2.7	2.8	3.0	3.1	3.2	3.4	3.5	3.7	3.8	4.0	4.1	4.3

PINPOINT TEST I: LFC 24 — SAFING SENSOR OUTPUT FEED/RETURN CIRCUIT OPEN

TEST CONDITIONS	TEST DETAILS/RESULTS/ACTIONS
I1 CHECK FOR LFC 24	
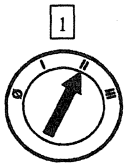	2 Count the Lamp Fault Codes (LFC). • Is LFC 24 flashing? → **Yes** GO to **I2.** → **No** READ the Normal Operation description for this pinpoint test. CHECK for causes of intermittent conditions. DO NOT proceed unless LFC 24 is flashing. Failure to do so can result in unnecessary replacement of SRS components and repeat repair.
I2 CHECK CIRCUITS 614 (GY/O) AND 623 (P/W) FOR VOLTAGE	
NOTE: Use the voltage table for normal voltage specification. Voltage should be within ± 0.5 volt.	
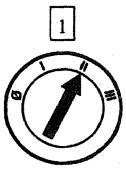 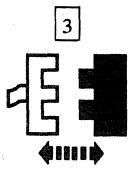 Air Bag Diagnostic Monitor C276 and C277	2 Deactivate the system.

Official Licensed Product
Ford Motor Company

(Continued)

DIAGNOSIS AND TESTING (Continued)

PINPOINT TEST I: LFC 24 — SAFING SENSOR OUTPUT FEED/RETURN CIRCUIT OPEN (Continued)

TEST CONDITIONS	TEST DETAILS/RESULTS/ACTIONS
I2 CHECK CIRCUITS 614 (GY/O) AND 623 (P/W) FOR VOLTAGE (Continued)	
5 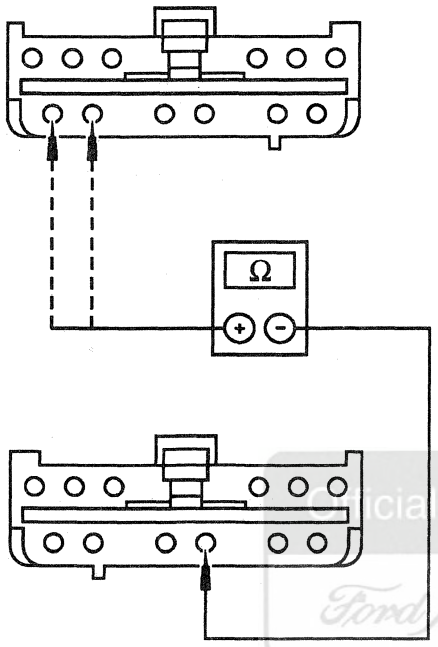 DR0585-A	5 Measure the voltage between Pins C276-11, Circuit 614 (GY/O) and C276-12, Circuit 623 (P/W) and Pin C277-3, Circuit 57 (BK). • Is the voltage within specification? → **Yes** CHECK Circuit 609 (O/Y) for intermittent open circuits. If no open circuits are found, REPLACE the air bag diagnostic monitor. RECONNECT the system. VERIFY the system. REACTIVATE the system. → **No** If both pins measure low voltage, GO to **I3**. If Pin C276-11 measures high and Pin C276-12 measures low, GO to **I4**.

Official Licensed Product
Ford Motor Company

(Continued)

DIAGNOSIS AND TESTING (Continued)

PINPOINT TEST I: LFC 24 — SAFING SENSOR OUTPUT FEED/RETURN CIRCUIT OPEN (Continued)

TEST CONDITIONS	TEST DETAILS/RESULTS/ACTIONS
I3 CHECK CIRCUIT 614 (GY/O) FOR A SHORT TO GROUND	
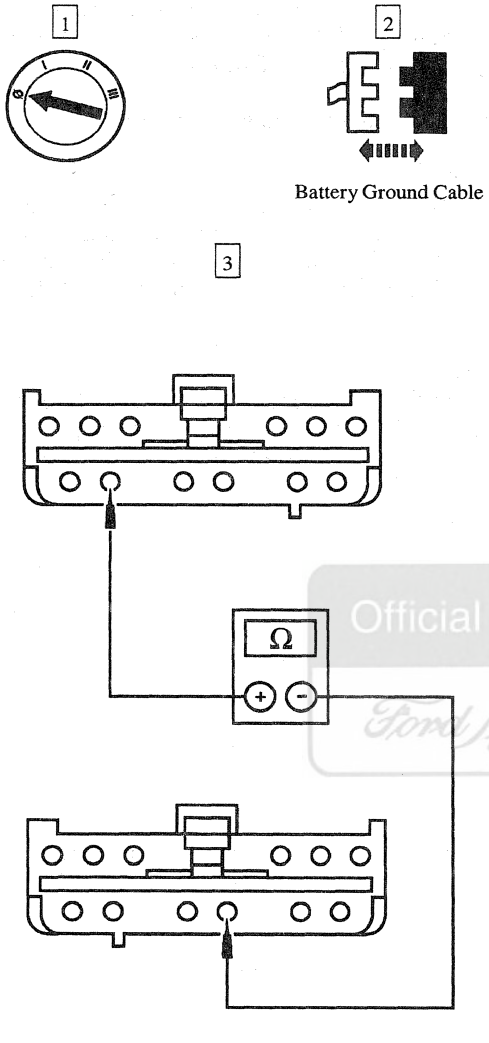	3 Measure the resistance between Pin C276-11, Circuit 614 (GY/O) and Pin C277-3, Circuit 57 (BK). • Is the resistance reading infinite? → **Yes** REPLACE the air bag diagnostic monitor. RECONNECT the system. VERIFY the system. REACTIVATE the system. → **No** LOCATE and REPAIR the short to ground on Circuit 614 (GY/O), Circuit 615 (GY/W), Circuit 616 (PK/BK) or Circuit 623 (P/W). CHECK the driver and passenger air bag modules, air bag sliding contact and air bag safing sensor for an internal short to ground. RECONNECT the system. VERIFY the system. REACTIVATE the system.

Official Licensed Ford Motor Company

(Continued)

DIAGNOSIS AND TESTING (Continued)

PINPOINT TEST I: LFC 24 — SAFING SENSOR OUTPUT FEED/RETURN CIRCUIT OPEN (Continued)

TEST CONDITIONS	TEST DETAILS/RESULTS/ACTIONS
I4 CHECK CIRCUITS 614 (GY/O) AND 623 (P/W) FOR AN OPEN	
1 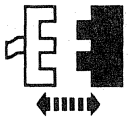 Air Bag Safing Sensor C235 2 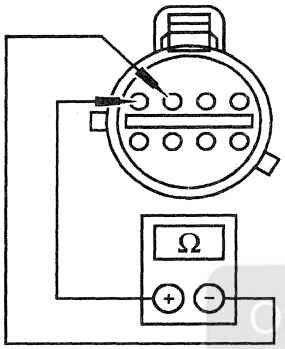 DR0587-A	2 Measure the resistance between Pin C235-1, Circuit 614 (GY/O) and Pin C235-2, Circuit 623 (P/W). • Is the resistance less than 2 ohms? → Yes LOCATE and REPAIR the open in Circuit 614 (GY/O) or Circuit 623 (P/W). RECONNECT the system. VERIFY the system. REACTIVATE the system. → No REPLACE the air bag safing sensor. RECONNECT the system. VERIFY the system. REACTIVATE the system.

Official Licensed Product
Ford Motor Company

Pinpoint Test J: LFC 32 — Driver Air Bag Circuit High Resistance or Open

Normal Operation

⚠ **CAUTION: DO NOT attempt to remove the air bag shorting bar and measure the resistance of the air bag.**

NOTE: The connectors for the driver air bag module and the air bag sliding contact have metal spring clips that act as shorting bars. These shorting bars are built into the plastic hardshell connectors. The shorting bars are designed to short Circuits 614 (GY/O) and 615 (GY/W) together when the connectors are not mated.

The air bag diagnostic monitor measures the resistance across Pin C276-10, Circuit 615 (GY/W) and Pin C276-11, Circuit 614 (GY/O) every time the ignition switch is turned to RUN. Normal resistance across these circuits is between 1.5 ohm and 2.0 ohms. This resistance comes from the air bag itself (approximately 1.0 ohm) and the air bag sliding contact windings (approximately 0.25 to 0.5 ohm per winding, two windings in all). If the resistance across these two circuits exceeds 4.0 ohms, the air bag diagnostic monitor will flash LFC 32.

The air bag sliding contact shorting bar may be removed to measure the air bag sliding contact resistance. Use extreme care when reinstalling the shorting bar to make sure it is installed correctly.

Possible Causes

Excessive resistance across Pins C276-10 and C276-11 can be caused by:

- a poor connection where the air bag sliding contact connects into the main wiring harness. The air bag sliding contact connector at the base of the steering column may have excessive resistance between the male and female terminals in the connector or across the terminal crimps.
- an open circuit or high resistance in the air bag sliding contact windings inside the air bag sliding contact assembly.
- an open circuit or high resistance in the wiring harness in either Circuit 614 (GY/O) or Circuit 615 (GY/W).

DIAGNOSIS AND TESTING (Continued)

- an open circuit or high resistance in the driver air bag module. DO NOT attempt a direct resistance measurement of the driver air bag module. Follow the diagnostic procedures to determine if the driver air bag module resistance is higher than normal.

PINPOINT TEST J: LFC 32 — DRIVER AIR BAG CIRCUIT HIGH RESISTANCE OR OPEN

TEST CONDITIONS	TEST DETAILS/RESULTS/ACTIONS
J1 CHECK FOR LFC 32	
1 	2 Count the Lamp Fault Codes (LFC). • Is LFC 32 flashing? → **Yes** GO to **J2**. → **No** READ the Normal Operation description for this pinpoint test. CHECK for causes of intermittent conditions. DO NOT proceed unless LFC 32 is flashing. Failure to do so can result in unnecessary replacement of SRS components and repeat repair.
J2 CHECK THE DRIVER AIR BAG CIRCUIT FOR AN OPEN	
1 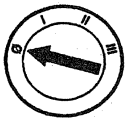 3 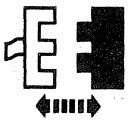 Air Bag Diagnostic Monitor C276 and C277	2 Deactivate the system. 4 Carefully remove the connector locking wedge and shorting bar from C276.

(Continued)

Official Licensed Product
Ford Motor Company

DIAGNOSIS AND TESTING (Continued)

PINPOINT TEST J: LFC 32 — DRIVER AIR BAG CIRCUIT HIGH RESISTANCE OR OPEN (Continued)

TEST CONDITIONS	TEST DETAILS/RESULTS/ACTIONS
J2 CHECK THE DRIVER AIR BAG CIRCUIT FOR AN OPEN (Continued)	
6 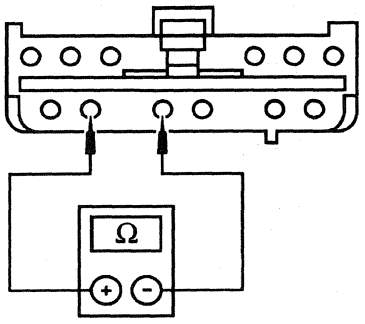 DR0588-A	5 Zero the multimeter by touching the leads together and record the resistance. 6 Measure the resistance between Pin C276-11, Circuit 614 (GY/O) and Pin C276-10, Circuit 615 (GY/W). Subtract the reading found when zeroing the multimeter. • Is the resistance less than 2.5 ohms? → **Yes** MAKE SURE that the connector locking wedge and shorting bar have been removed from C276. MAKE SURE to use the air bag simulator and not a jumper wire. GO to **J4**. → **No** GO to **J3**.
J3 RECHECK THE DRIVER AIR BAG CIRCUIT FOR AN OPEN	
2 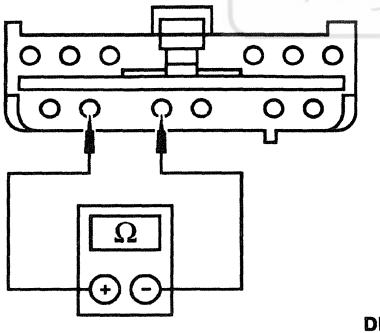 DR0588-A	1 Zero the multimeter by touching the leads together and record the resistance. 2 Measure the resistance between Pin C276-11, Circuit 614 (GY/O) and Pin C276-10, Circuit 615 (GY/W). Subtract the reading found when zeroing the multimeter. • Is the resistance greater than 3.0 ohms? → **Yes** GO to **J5**. → **No** GO to **J4**.

(Continued)

Official Licensee Ford Motor Co.

DIAGNOSIS AND TESTING (Continued)

PINPOINT TEST J: LFC 32 — DRIVER AIR BAG CIRCUIT HIGH RESISTANCE OR OPEN (Continued)

TEST CONDITIONS	TEST DETAILS/RESULTS/ACTIONS
J4 RECHECK FOR LFC 32	
1 Air Bag Diagnostic Monitor C276 and C277 2 	2 Wait 30 seconds for the LFC to begin flashing. • Is LFC 32 still flashing? → **Yes** REPLACE the air bag diagnostic monitor. RECONNECT the system. VERIFY the system. REACTIVATE the system. → **No** INSPECT the air bag diagnostic monitor connector for improperly retained Pins C276-10 and C276-11. If OK, INSPECT the air bag sliding contact wiring in the steering column for damaged wiring. If OK, RECONNECT the driver air bag module and VERIFY the system. If LFC is now indicated, REPLACE the driver air bag module. RECONNECT the system. VERIFY the system. REACTIVATE the system.
J5 CHECK THE AIR BAG SLIDING CONTACT	
1 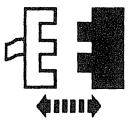 Driver Air Bag Simulator 2 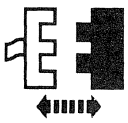 Air Bag Sliding Contact C230 3 Driver Air Bag Simulator 4 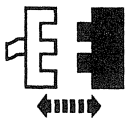 Air Bag Diagnostic Monitor C276 and C277	3 Connect the driver air bag simulator to C230. 5 Zero the multimeter by touching the leads together and record the resistance.

Official Licensed Product Ford Motor Company

(Continued)

DIAGNOSIS AND TESTING (Continued)

PINPOINT TEST J: LFC 32 — DRIVER AIR BAG CIRCUIT HIGH RESISTANCE OR OPEN (Continued)

TEST CONDITIONS	TEST DETAILS/RESULTS/ACTIONS
J5 CHECK THE AIR BAG SLIDING CONTACT (Continued)	
6 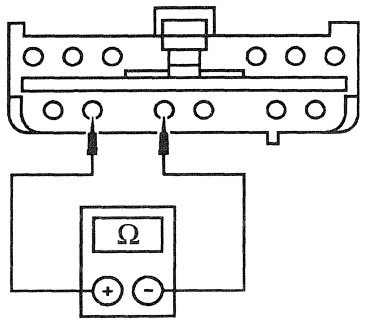 DR0588-A	6 Measure the resistance between Pin C276-11, Circuit 614 (GY/O) and Pin C276-10, Circuit 615 (GY/W). Subtract the reading found when zeroing the multimeter. • Is the resistance between 1.8 and 2.2 ohms? → **Yes** REPLACE the air bag sliding contact. RECONNECT the system. VERIFY the system. REACTIVATE the system. → **No** VERIFY the air bag simulator resistance measures between 1.8 and 2.2 ohms. If OK, LOCATE and SERVICE the open in Circuit 614 (GY/O) or Circuit 615 (GY/W). RECONNECT the system. VERIFY the system. REACTIVATE the system.

Pinpoint Test K: LFC 33 — Passenger Air Bag Circuit High Resistance or Open

Normal Operation

NOTE: The connector for the passenger air bag module assembly has a metal spring clip that acts as a shorting bar. This shorting bar is built into the plastic hardshell connector on the back of the passenger air bag module assembly. The shorting bar is designed to short the air bag terminals together when the connector is not mated. **DO NOT attempt to remove the passenger air bag shorting bar and measure the resistance of the passenger air bag module assembly.**

The air bag diagnostic monitor measures the resistance across Pin C276-8, Circuit 614 (GY/O) and Pin C276-9, Circuit 616 (PK/BK) every time the ignition switch is turned to RUN. Normal resistance across these circuits is between 0.9 ohm and 1.1 ohm. This resistance comes from the passenger air bag module itself. If the resistance across these two circuits exceeds 4.0 ohms, the air bag diagnostic monitor will flash LFC 33.

Possible Causes

A high resistance or open in the passenger air bag assembly circuit can be caused by:

- an open circuit or high resistance in the wiring harness in Circuit 614 (GY/O) or Circuit 616 (PK/BK).
- an open circuit or high resistance in the passenger air bag module assembly. DO NOT attempt a direct resistance measurement of the passenger air bag module assembly. Follow the diagnostic procedures to determine if the air bag resistance is higher than normal.

Official Licensee Parts Ford Motor Company

DIAGNOSIS AND TESTING (Continued)

PINPOINT TEST K: LFC 33 — PASSENGER AIR BAG CIRCUIT HIGH RESISTANCE OR OPEN

TEST CONDITIONS	TEST DETAILS/RESULTS/ACTIONS
K1 CHECK FOR LFC 33	
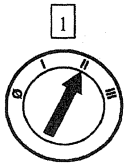	[2] Count the Lamp Fault Codes (LFC). • Is LFC 33 flashing? → **Yes** GO to **K2**. → **No** READ the Normal Operation description for this pinpoint test. CHECK for causes of intermittent conditions. DO NOT proceed unless LFC 33 is flashing. Failure to do so can result in unnecessary replacement of SRS components and repeat repair.
K2 CHECK THE PASSENGER AIR BAG CIRCUIT FOR AN OPEN	
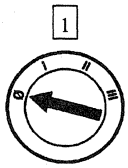 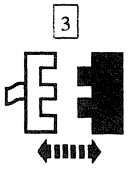 Air Bag Diagnostic Monitor C276 and C277	[2] Deactivate the system. [4] Carefully remove the connector locking wedge and shorting bar from C276. [5] Zero the multimeter by touching the leads together and record the resistance.

(Continued)

DIAGNOSIS AND TESTING (Continued)

PINPOINT TEST K: LFC 33 — PASSENGER AIR BAG CIRCUIT HIGH RESISTANCE OR OPEN (Continued)

TEST CONDITIONS	TEST DETAILS/RESULTS/ACTIONS
K2 CHECK THE PASSENGER AIR BAG CIRCUIT FOR AN OPEN (Continued)	
6 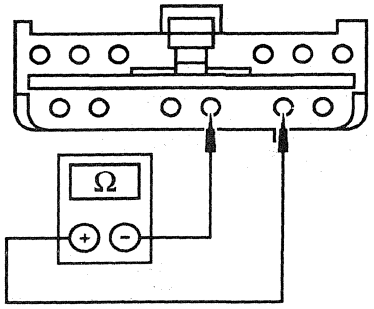 DR0589-A	6 Measure the resistance between Pin C276-8, Circuit 614 (GY/O) and Pin C276-9, Circuit 616 (PK/BK). Subtract the reading found when zeroing the multimeter. • Is the resistance greater than 2.2 ohms? → **Yes** VERIFY the air bag simulator resistance measures between 1.8 and 2.2 ohms. If OK, LOCATE and REPAIR the open in Circuit 614 (GY/O) or Circuit 616 (PK/BK). RECONNECT the system. VERIFY the system. REACTIVATE the system. → **No** GO to **K3**.
K3 RECHECK FOR LFC 33	
1 Air Bag Diagnostic Monitor C276 and C277 2 	2 Wait 30 seconds for the LFC to begin flashing. • Is LFC 33 still flashing? → **Yes** REPLACE the air bag diagnostic monitor. RECONNECT the system. VERIFY the system. REACTIVATE the system. → **No** GO to **K4**.
K4 CHECK FOR AN INTERMITTENT LFC 33	
1 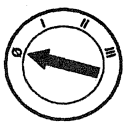	2 Reactivate the system.

(Continued)

Ford Motor Company Licensed Product

DIAGNOSIS AND TESTING (Continued)

PINPOINT TEST K: LFC 33 — PASSENGER AIR BAG CIRCUIT HIGH RESISTANCE OR OPEN (Continued)

TEST CONDITIONS	TEST DETAILS/RESULTS/ACTIONS
K4 CHECK FOR AN INTERMITTENT LFC 33 (Continued)	
3	3 Wait 30 seconds for the LFC to begin flashing. • Is LFC 33 still flashing? → **Yes** REPLACE the passenger air bag module. RECONNECT the system. VERIFY the system. REACTIVATE the system. → **No** The fault is intermittent. INSPECT Circuit 614 (GY/O) and Circuit 616 (PK/BK) for an open circuit. EXAMINE all connectors of the air bag diagnostic monitor and the passenger air bag module.

Pinpoint Test L: LFC 34 — Driver Air Bag Circuit Low Resistance or Short

Normal Operation

⚠ **CAUTION: DO NOT attempt to remove the driver air bag module shorting bar and measure the resistance of the driver air bag module.**

NOTE: The connectors for the driver air bag module and the air bag sliding contact have metal spring clips that act as shorting bars. These shorting bars are built into the plastic hardshell connectors. The shorting bars are designed to short Circuits 614 (GY/O) and 615 (GY/W) together when the connectors are not mated.

The air bag diagnostic monitor measures the resistance across Pin C276-10, Circuit 615 (GY/W) and Pin C276-11, Circuit 614 (GY/O) every time the ignition switch is turned to RUN. Normal resistance across these circuits is between 1.5 ohm and 2.0 ohms. This resistance comes from the driver air bag module itself (approximately 1.0 ohm) and the air bag sliding contact windings (0.25 to 0.5 ohm per winding, two windings in all). If the resistance across these two circuits is less than 0.7 ohm, the air bag diagnostic monitor will flash LFC 34.

The air bag sliding contact shorting bar may be removed to measure the air bag sliding contact resistance. Use extreme care when reinstalling the shorting bar to make sure it is installed correctly.

Possible Causes

Low resistance across Pins C276-10 and C276-11 can be caused by:

- a poorly mated air bag sliding contact connector not pushing the shorting bars back into their fully retracted positions.
- a damaged shorting bar that can short Circuits 614 (GY/O) and 615 (GY/W) together.
- a short in the air bag sliding contact windings.
- a short across the air bag terminals within the driver air bag module. DO NOT attempt a direct resistance measurement of the air bag. Follow the diagnostic procedures to determine if the driver air bag module resistance is lower than normal.

Official Licensed Product Ford Motor Company

DIAGNOSIS AND TESTING (Continued)

PINPOINT TEST L: LFC 34 — DRIVER AIR BAG CIRCUIT LOW RESISTANCE OR SHORT

TEST CONDITIONS	TEST DETAILS/RESULTS/ACTIONS
L1 CHECK FOR LFC 34	
1 	2 Count the Lamp Fault Codes (LFC). • Is LFC 34 flashing? → **Yes** GO to **L2**. → **No** READ the Normal Operation description for this pinpoint test. CHECK for causes of intermittent conditions. DO NOT proceed unless LFC 34 is flashing. Failure to do so can result in unnecessary replacement of SRS components and repeat repair.
L2 CHECK THE DRIVER AIR BAG CIRCUIT FOR A SHORT	
1 3 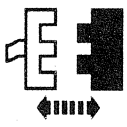 Air Bag Diagnostic Monitor C276 and C277	2 Deactivate the system. Do not install the driver air bag simulator. 4 Carefully remove the connector locking wedge and shorting bar from C276.

(Continued)

Ford Motor Company

DIAGNOSIS AND TESTING (Continued)

PINPOINT TEST L: LFC 34 — DRIVER AIR BAG CIRCUIT LOW RESISTANCE OR SHORT (Continued)

TEST CONDITIONS	TEST DETAILS/RESULTS/ACTIONS
L2 CHECK THE DRIVER AIR BAG CIRCUIT FOR A SHORT (Continued)	
5 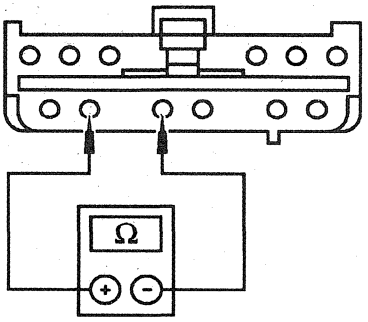 DR0588-A	5 Measure the resistance between Pin C276-11, Circuit 614 (GY/O) and Pin C276-10, Circuit 615 (GY/W). • Is the resistance reading infinite? → **Yes** GO to **L3**. → **No** GO to **L4**.
L3 RECHECK FOR LFC 34	
1 Driver Air Bag Simulator 2 Air Bag Diagnostic Monitor C276 and C277 3 	1 Install the driver air bag simulator. 3 Wait 30 seconds for the LFC to begin flashing. • Is LFC 34 still flashing? → **Yes** VERIFY the air bag simulator resistance measures between 1.8 and 2.2 ohms. If OK, REPLACE the air bag diagnostic monitor. RECONNECT the system. VERIFY the system. REACTIVATE the system. → **No** REPLACE the driver air bag module. RECONNECT the system. VERIFY the system. REACTIVATE the system.

(Continued)

Official Licensed Product
Ford Motor Company

DIAGNOSIS AND TESTING (Continued)

PINPOINT TEST L: LFC 34 — DRIVER AIR BAG CIRCUIT LOW RESISTANCE OR SHORT (Continued)

TEST CONDITIONS	TEST DETAILS/RESULTS/ACTIONS
L4 CHECK THE AIR BAG SLIDING CONTACT	
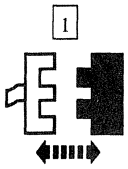 Air Bag Sliding Contact C230 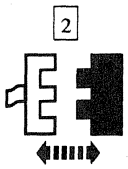 Air Bag Diagnostic Monitor C276 and C277 3 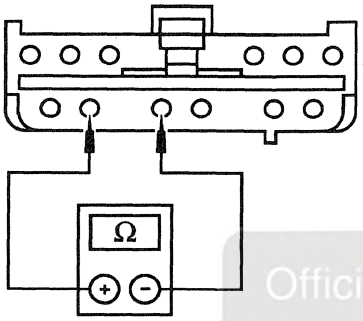 DR0588-A	3 Measure the resistance between Pin C276-11, Circuit 614 (GY/O) and Pin C276-10, Circuit 615 (GY/W). • Is the resistance reading infinite? → **Yes** REPLACE the air bag sliding contact. RECONNECT the system. VERIFY the system. REACTIVATE the system. → **No** LOCATE and REPAIR the short across Circuit 614 (GY/O) and Circuit 615 (GY/W). INSPECT the air bag diagnostic monitor connectors and the air bag sliding contact connectors for shorted terminals. RECONNECT the system. VERIFY the system. REACTIVATE the system.

Official Licensed Product
Ford Motor Company

DIAGNOSIS AND TESTING (Continued)

Pinpoint Test M: LFC 35 — Passenger Air Bag Circuit Low Resistance or Short

Normal Operation

⚠ **CAUTION: DO NOT attempt to remove the passenger air bag shorting bar and measure the resistance of the assembly.**

NOTE: The connector for the passenger air bag module assembly has a metal spring clip that acts as a shorting bar. This shorting bar is built into the plastic hardshell connector on the back of the passenger air bag module assembly. The shorting bar is designed to short the passenger air bag terminals together when the connector is not mated.

The air bag diagnostic monitor measures the resistance across Pin C276-8, Circuit 614 (GY/O) and Pin C276-9, Circuit 616 (PK/BK) every time the ignition switch is turned to RUN. Normal resistance across these circuits is between 0.9 ohm and 1.1 ohm. This resistance comes from the passenger air bag module assembly itself. If the resistance across Pin C276-8 and C276-9 is less than 0.7 ohm, the air bag diagnostic monitor will flash DTC 35. If low resistance is measured across Pins C276-8 and C276-9, LFC 35 will appear.

Possible Causes

Low resistance across Pins C276-8 and C276-9 can be caused by:

- a poorly mated passenger air bag harness connector not pushing the shorting bars back into their fully retracted positions.
- a damaged shorting bar that can short Circuits 614 (GY/O) and 616 (PK/BK) together.
- a short across the passenger air bag terminals within the passenger air bag module assembly. DO NOT attempt a direct resistance measurement of the passenger air bag module assembly. Follow the diagnostic procedures to determine if the passenger air bag resistance is lower than normal.
- a short in the wiring harness between Circuits 614 (GY/O) and 616 (PK/BK).

Special Licensed Product

PINPOINT TEST M: LFC 35 — PASSENGER AIR BAG CIRCUIT LOW RESISTANCE OR SHORT

TEST CONDITIONS	TEST DETAILS/RESULTS/ACTIONS
M1 CHECK FOR LFC 35	
1 	2 Count the Lamp Fault Codes (LFC). • Is LFC 35 flashing? → **Yes** GO to **M2**. → **No** READ the Normal Operation description for this pinpoint test. CHECK for causes of intermittent conditions. DO NOT proceed unless LFC 35 is flashing. Failure to do so can result in unnecessary replacement of SRS components and repeat repair.

(Continued)

DIAGNOSIS AND TESTING (Continued)

PINPOINT TEST M: LFC 35 — PASSENGER AIR BAG CIRCUIT LOW RESISTANCE OR SHORT (Continued)

TEST CONDITIONS	TEST DETAILS/RESULTS/ACTIONS
M2 CHECK THE PASSENGER AIR BAG CIRCUIT FOR A SHORT	
1 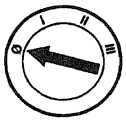	2 Deactivate the system. Do not install the passenger air bag simulator.
3 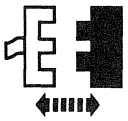 Air Bag Diagnostic Monitor C276 and C277	4 Carefully remove the connector locking wedge and shorting bar from C276.
5 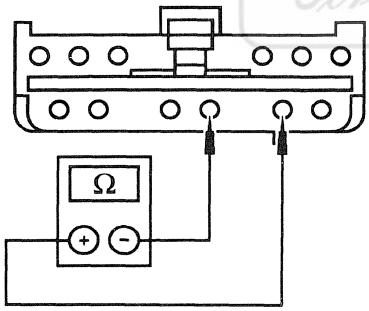 DR0589-A	5 Measure the resistance between Pin C276-8, Circuit 614 (GY/O) and Pin C276-9, Circuit 616 (PK/BK). • Is the resistance reading infinite? → **Yes** GO to **M3**. → **No** LOCATE and REPAIR short across Circuit 614 (GY/O) and Circuit 616 (PK/BK). INSPECT the air bag diagnostic monitor connector and terminals for possible short circuits. RECONNECT the system. VERIFY the system. REACTIVATE the system.
M3 RECHECK FOR LFC 35	
1 Passenger Air Bag Simulator	1 Install the passenger air bag simulator.

(Continued)

Official Licensed Product
Ford Motor Company

DIAGNOSIS AND TESTING (Continued)

PINPOINT TEST M: LFC 35 — PASSENGER AIR BAG CIRCUIT LOW RESISTANCE OR SHORT (Continued)

TEST CONDITIONS	TEST DETAILS/RESULTS/ACTIONS
M3 RECHECK FOR LFC 35 (Continued)	
2 Air Bag Diagnostic Monitor C276 and C277 3	3 Wait 30 seconds for the LFC to begin flashing? • Is LFC 35 still flashing? → **Yes** VERIFY the air bag simulator resistance measures between 1.8 and 2.2 ohms. If OK, REPLACE the air bag diagnostic monitor. RECONNECT the system. VERIFY the system. REACTIVATE the system. → **No** REPLACE the passenger air bag module. RECONNECT the system. VERIFY the system. REACTIVATE the system.

Pinpoint Test N: LFC 41 — RH Primary Crash Sensor Feed/Return Circuit Open

Normal Operation

The voltage at Pin C277-17, Circuit 617 (PK/O) is approximately 10 volts ± 1 volt. Circuit 617 is connected to Circuit 624 (Y/W) inside the RH primary crash sensor. Therefore, the voltage at Pin C277-2 should be the same as the voltage at Pin C277-17. If the voltage at Pin C277-2 is less than the voltage at Pin C277-17, the air bag diagnostic monitor will flash LFC 41.

Possible Causes

Low voltage at Pin C277-2 can be caused by:

- an open circuit in the wiring harness in either Circuit 617 (PK/O) or Circuit 624 (Y/W).
- an open circuit in RH primary crash sensor across Circuit 617 (PK/O) and Circuit 624 (Y/W).

Ford Motor Company Special Licensed Product

DIAGNOSIS AND TESTING (Continued)

PINPOINT TEST N: LFC 41 — RH PRIMARY CRASH SENSOR FEED/RETURN CIRCUIT OPEN

TEST CONDITIONS	TEST DETAILS/RESULTS/ACTIONS
N1 CHECK FOR LFC 41	
1 	2 Count the Lamp Fault Codes (LFC). • Is LFC 41 flashing? → **Yes** GO to **N2**. → **No** READ the Normal Operation description for this pinpoint test. CHECK for causes of intermittent conditions. DO NOT proceed unless LFC 41 is flashing. Failure to do so can result in unnecessary replacement of SRS components and repeat repair.
N2 CHECK FOR AN OPEN CRASH SENSOR CIRCUIT	
1 3 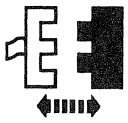 Air Bag Diagnostic Monitor C276 and C277	2 Deactivate the system.

(Continued)

Ford Motor Company

DIAGNOSIS AND TESTING (Continued)

PINPOINT TEST N: LFC 41 — RH PRIMARY CRASH SENSOR FEED/RETURN CIRCUIT OPEN (Continued)

TEST CONDITIONS	TEST DETAILS/RESULTS/ACTIONS
N2 CHECK FOR AN OPEN CRASH SENSOR CIRCUIT (Continued)	
4 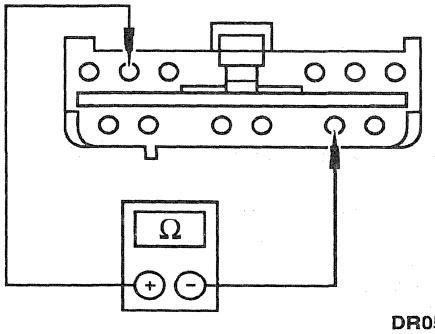 DR0590-A	4 Measure the resistance between Pin C277-17, Circuit 617 (PK/O) and Pin C277-2, Circuit 624 (Y/W). • Is the resistance less than 2 ohms? → **Yes** REPLACE the air bag diagnostic monitor. RECONNECT the system. VERIFY the system. REACTIVATE the system. → **No** GO to **N3**.
N3 CHECK THE CRASH SENSOR	
1 RH Primary Crash Sensor C133 2 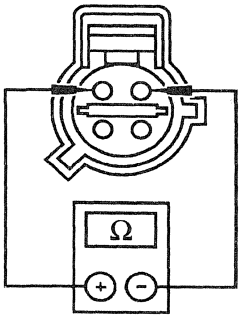 DR0540-A	2 Measure the resistance between C133, Circuit 617 (PK/O) and Circuit 624 (Y/W). • Is the resistance less than 2 ohms? → **Yes** LOCATE and REPAIR the open in either Circuit 617 (PK/O) or Circuit 624 (Y/W). INSPECT all connectors for poor connections. RECONNECT the system. VERIFY the system. REACTIVATE the system. → **No** REPLACE the RH primary crash sensor. RECONNECT the system. VERIFY the system. REACTIVATE the system.

Official Licensed Product
Ford Motor Company

DIAGNOSIS AND TESTING (Continued)

Pinpoint Test O: LFC 42 — LH Primary Crash Sensor Feed/Return Circuit Open

Normal Operation

The voltage at Pin C277-18, Circuit 619 (PK/W) is approximately 10 volts ± 1 volt. Circuit 619 (PK/W) is connected to Circuit 625 (Y/LG) inside the LH primary crash sensor. Therefore, the voltage at Pin C277-6 should be the same as the voltage at Pin C277-18. If the voltage at Pin C277-6 is lower than the voltage at Pin C277-18, the air bag diagnostic monitor will flash LFC 42.

Possible Causes

Low voltage on Pin C277-6 can be caused by:

- an open circuit in the wiring harness in either Circuit 619 (PK/W) or Circuit 625 (Y/LG).
- an open circuit in LH primary crash sensor across Circuit 619 (PK/W) and Circuit 625 (Y/LG).

PINPOINT TEST O: LFC 42 — LH PRIMARY CRASH SENSOR FEED/RETURN CIRCUIT OPEN

TEST CONDITIONS	TEST DETAILS/RESULTS/ACTIONS
O1 CHECK FOR LFC 42	
1 	2 Count the Lamp Fault Codes (LFC). • Is LFC 42 flashing? → **Yes** GO to **O2**. → **No** READ the Normal Operation description for this pinpoint test. CHECK for causes of intermittent conditions. DO NOT proceed unless LFC 42 is flashing. Failure to do so can result in unnecessary replacement of SRS components and repeat repair.
O2 CHECK FOR AN OPEN CRASH SENSOR CIRCUIT	
1 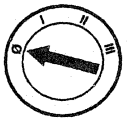	2 Deactivate the system.

(Continued)

Official Licensed Product
Ford Motor Company

DIAGNOSIS AND TESTING (Continued)

PINPOINT TEST O: LFC 42 — LH PRIMARY CRASH SENSOR FEED/RETURN CIRCUIT OPEN (Continued)

TEST CONDITIONS	TEST DETAILS/RESULTS/ACTIONS
O2 CHECK FOR AN OPEN CRASH SENSOR CIRCUIT (Continued)	
3 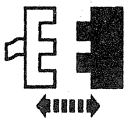 Air Bag Diagnostic Monitor C276 and C277 4 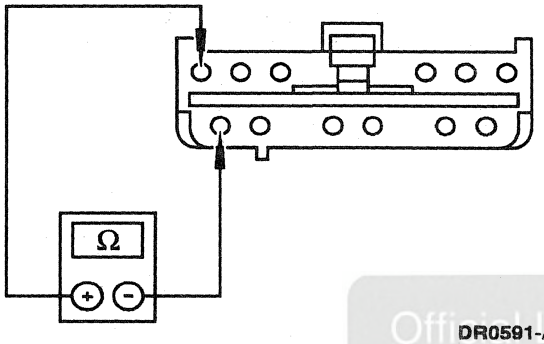 DR0591-A	4 Measure the resistance between Pin C277-18, Circuit 619 (PK/W) and Pin C277-6, Circuit 625 (Y/LG). • Is the resistance less than 24 ohms? → **Yes** REPLACE the air bag diagnostic monitor. RECONNECT the system. VERIFY the system. REACTIVATE the system. → **No** GO to **O3**.
O3 CHECK THE CRASH SENSOR	
1 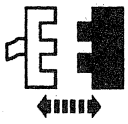 LH Primary Crash Sensor C133 2 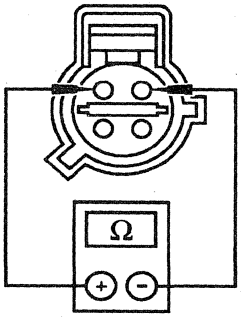 DR0540-A	2 Measure the resistance between C138, Circuit 619 (PK/W) and Circuit 625 (Y/LG). • Is the resistance less than 24 ohms? → **Yes** LOCATE and REPAIR the open in either Circuit 619 (PK/W) or Circuit 625 (Y/LG). INSPECT all connectors for poor connections. RECONNECT the system. VERIFY the system. REACTIVATE the system. → **No** REPLACE the LH primary crash sensor. RECONNECT the system. VERIFY the system. REACTIVATE the system.

Official Licensed Product
Ford Motor Company

DIAGNOSIS AND TESTING (Continued)

Pinpoint Test P: LFC 44 — RH Primary Crash Sensor Not Mounted to Vehicle Properly

Normal Operation

Note that Circuit 618 (P/LG) is grounded to the side of the RH primary crash sensor case and the case is grounded to the vehicle at its mounting point.

The air bag diagnostic monitor measures the resistance between Pin C276-20, Circuit 618 (P/LG) and Pin C277-3, Circuit 57 (BK), diagnostic monitor reference ground. If the air bag diagnostic monitor measures a difference of more than 2.0 ohms between Pin 276-20 and Pin C277-3, it will flash LFC 44.

The air bag diagnostic monitor measures the resistance between Pin 276-20, Circuit 618 (P/LG) and Pin C277-3, Circuit 57 (BK), diagnostic monitor reference ground. If the air bag diagnostic monitor measures a difference of more than 2.0 ohms between Pin C276-20 and Pin C277-3, it will flash LFC 44.

Possible Causes

High resistance on Pin C276-20, Circuit 618 (P/LG) to ground can be caused by:

- a poor connection due to loose mounting, dirt or corrosion at the RH primary crash front air bag sensor and bracket mounting location.
- an open or damaged wire in Circuit 618 (P/LG) from Pin C276-20 of the air bag diagnostic monitor harness connector to RH primary crash sensor.
- an open circuit inside RH primary crash sensor.

PINPOINT TEST P: LFC 44 — RH PRIMARY CRASH SENSOR NOT MOUNTED TO VEHICLE PROPERLY

TEST CONDITIONS	TEST DETAILS/RESULTS/ACTIONS
P1 CHECK FOR LFC 44	
	2 Count the Lamp Fault Codes (LFC). • Is LFC 44 flashing? → **Yes** GO to **P2**. → **No** READ the Normal Operation description for this pinpoint test. CHECK for causes of intermittent conditions. DO NOT proceed unless LFC 44 is flashing. Failure to do so can result in unnecessary replacement of SRS components and repeat repair.

(Continued)

Official Licensed Product
Ford Motor Company

DIAGNOSIS AND TESTING (Continued)

PINPOINT TEST P: LFC 44 — RH PRIMARY CRASH SENSOR NOT MOUNTED TO VEHICLE PROPERLY (Continued)

TEST CONDITIONS	TEST DETAILS/RESULTS/ACTIONS
P2 CHECK FOR AN OPEN CRASH SENSOR CIRCUIT	
1 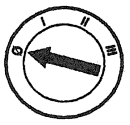 	
	2 Deactivate the system. Leave the battery ground cable disconnected.
3 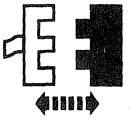 Air Bag Diagnostic Monitor C276 and C277	
	4 Zero the multimeter by touching the leads together and record the resistance.
5 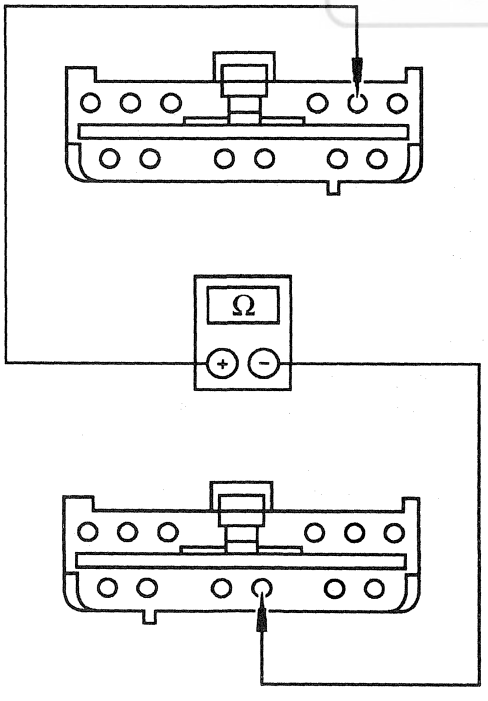 DR0592-A	5 Measure the resistance between Pin C276-20, Circuit 618 (P/LG) and Pin C277-3, Circuit 57 (BK). Subtract the reading found when zeroing the multimeter. • Is the resistance greater than 2 ohms? → **Yes** GO to **P3**. → **No** REPLACE the air bag diagnostic monitor. RECONNECT the system. VERIFY the system. REACTIVATE the system.

(Continued)

DIAGNOSIS AND TESTING (Continued)

PINPOINT TEST P: LFC 44 — RH PRIMARY CRASH SENSOR NOT MOUNTED TO VEHICLE PROPERLY (Continued)

TEST CONDITIONS	TEST DETAILS/RESULTS/ACTIONS
P3 CHECK THE CRASH SENSOR GROUND	
1 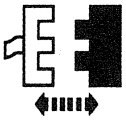 RH Primary Crash Sensor C133 2 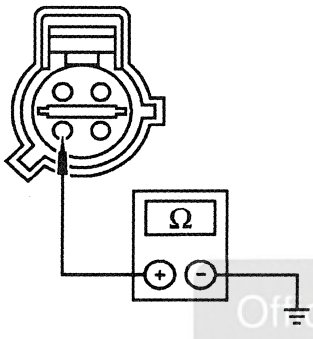 	2 Measure the resistance between C133, Circuit 618 (P/LG) and ground. • Is the resistance less than 2 ohms? → **Yes** INSPECT Circuit 618 (P/LG) for an open circuit. CHECK all connectors for poor connections. RECONNECT the system. VERIFY the system. REACTIVATE the system. → **No** REMOVE the RH primary crash sensor. CLEAN the RH primary crash sensor mounting surface. INSTALL the RH primary crash sensor. TIGHTEN the retaining screws to proper specification. GO to **P4**.
P4 RECHECK THE CRASH SENSOR GROUND	
1 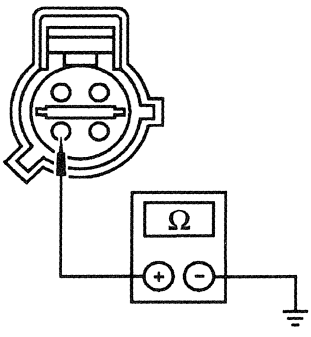 	1 Measure the resistance between C133, Circuit 618 (P/LG) and ground. • Is the resistance less than 2 ohms? → **Yes** RECONNECT the system. VERIFY the system. REACTIVATE the system. → **No** REPLACE the RH primary crash sensor. RECONNECT the system. VERIFY the system. REACTIVATE the system.

Official Licensed Product
Ford Motor Company

Pinpoint Test Q: LFC 45 — LH Primary Crash Sensor Not Mounted to Vehicle Properly

Normal Operation

Note that Circuit 620 (P/LB) is grounded to the side of the LH primary crash sensor case and the case is grounded to the vehicle at its mounting point.

The air bag diagnostic monitor measures the resistance between Pin C276-21, Circuit 620 (P/LB) and Pin C277-3, Circuit 57 (BK), diagnostic monitor reference ground. If the air bag diagnostic monitor measures a difference of more than 2.0 ohms between Pin C276-21 and Pin C277-3, it will flash LFC 45.

DIAGNOSIS AND TESTING (Continued)

Possible Causes

High resistance on Pin C276-21, Circuit 620 (P/LB) to ground can be caused by:

- a poor connection due to loose mounting, dirt or corrosion at the LH primary crash front air bag sensor and bracket mounting location.
- an open or damaged wire in Circuit 620 (P/LB) from Pin C276-21 of the air bag diagnostic monitor harness connector to LH primary crash sensor.
- an open circuit inside LH primary crash sensor.

PINPOINT TEST Q: LFC 45 — LH PRIMARY CRASH SENSOR NOT MOUNTED TO VEHICLE PROPERLY

TEST CONDITIONS	TEST DETAILS/RESULTS/ACTIONS
Q1 CHECK FOR LFC 45	
1 	2 Count the Lamp Fault Codes (LFC). • Is LFC 45 flashing? → **Yes** GO to **Q2**. → **No** READ the Normal Operation description for this pinpoint test. CHECK for causes of intermittent conditions. DO NOT proceed unless LFC 45 is flashing. Failure to do so can result in unnecessary replacement of SRS components and repeat repair.
Q2 CHECK FOR AN OPEN CRASH SENSOR CIRCUIT	
1 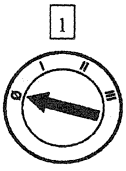 3 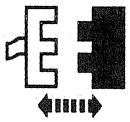 Air Bag Diagnostic Monitor C276 and C277	2 Deactivate the system. Leave the battery ground cable disconnected.

(Continued)

Official Licensed Product
Ford Motor Company

DIAGNOSIS AND TESTING (Continued)

PINPOINT TEST Q: LFC 45 — LH PRIMARY CRASH SENSOR NOT MOUNTED TO VEHICLE PROPERLY (Continued)

TEST CONDITIONS	TEST DETAILS/RESULTS/ACTIONS
Q2 CHECK FOR AN OPEN CRASH SENSOR CIRCUIT (Continued)	
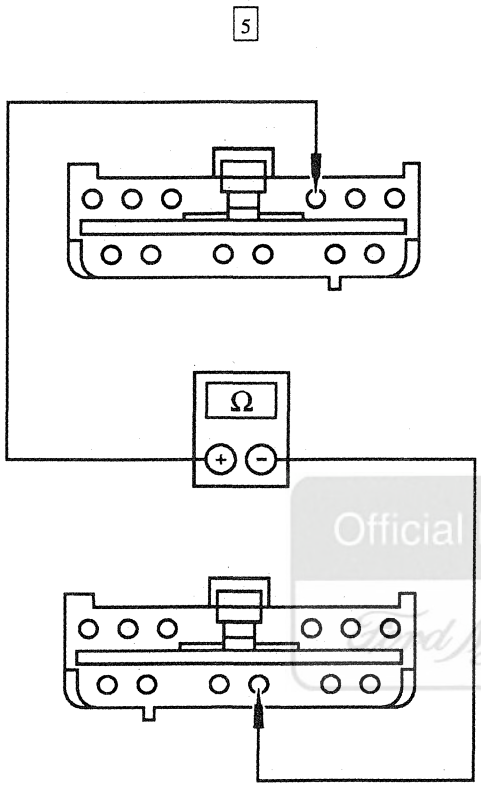 DR0594-A	4 Zero the multimeter by touching the leads together and record the resistance. 5 Measure the resistance between Pin C276-21, Circuit 620 (P/LB) and Pin C277-3, Circuit 57 (BK). Subtract the reading found when zeroing the multimeter. • Is the resistance greater than 2 ohms? → **Yes** GO to **Q3**. → **No** REPLACE the air bag diagnostic monitor. RECONNECT the system. VERIFY the system. REACTIVATE the system.

Official Licensed Product
Ford Motor Company

(Continued)

DIAGNOSIS AND TESTING (Continued)

PINPOINT TEST Q: LFC 45 — LH PRIMARY CRASH SENSOR NOT MOUNTED TO VEHICLE PROPERLY (Continued)

TEST CONDITIONS	TEST DETAILS/RESULTS/ACTIONS
Q3 CHECK THE CRASH SENSOR GROUND	
1 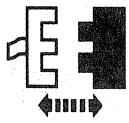 LH Primary Crash Sensor C133 2 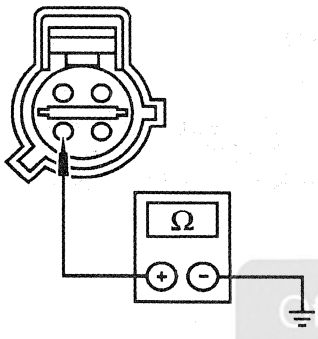 	2 Measure the resistance between C138, Circuit 620 (P/LB) and ground. • Is the resistance less than 2 ohms? → **Yes** INSPECT Circuit 620 (P/LB) for an open circuit. CHECK all connectors for poor connections. RECONNECT the system. VERIFY the system. REACTIVATE the system. → **No** REMOVE the LH primary crash sensor. CLEAN the LH primary crash sensor mounting surface. INSTALL the LH primary crash sensor. TIGHTEN the retaining screws to proper specification. GO to **Q4**.
Q4 RECHECK THE CRASH SENSOR GROUND	
1 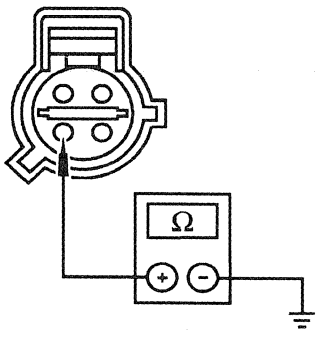 	1 Measure the resistance between C138, Circuit 620 (P/LB) and ground. • Is the resistance less than 2 ohms? → **Yes** RECONNECT the system. VERIFY the system. REACTIVATE the system. → **No** REPLACE the LH primary crash sensor. RECONNECT the system. VERIFY the system. REACTIVATE the system.

Official Licensed Product
Ford Motor Company

DIAGNOSIS AND TESTING (Continued)

LFC 51 — Air Bag Diagnostic Monitor Internal Thermal Fuse — Fuse Open Due to Intermittent Short to Ground

Normal Operation

WARNING: DO NOT INSTALL A NEW AIR BAG DIAGNOSTIC MONITOR UNTIL THE SHORT HAS BEEN LOCATED AND CORRECTED. IF A SHORT TO GROUND HAS NOT BEEN LOCATED AND CORRECTED, THEN THE SHORT TO GROUND IS INTERMITTENT AND IS NOT PRESENT AT THIS TIME. INSTALLING A NEW DIAGNOSTIC MONITOR WITH AN INTERMITTENT SHORT IN THE SYSTEM WILL RESULT IN REPEAT DAMAGED DIAGNOSTIC MONITORS AND REPEAT REPAIR.

NOTE: The air bag diagnostic monitor (14B056) contains an internal thermal fuse that is not repairable. The thermal fuse is controlled by the microprocessor inside the air bag diagnostic monitor. The microprocessor inside the air bag diagnostic monitor will open the thermal fuse whenever a short on the deployment circuits occurs. **The thermal fuse does not open because of excessive current flowing through it. DO NOT attempt to short circuit the thermal fuse with a circuit breaker or any other type of fuse.**

The air bag diagnostic monitor measures the voltages at the air bag diagnostic monitor connector pins. When certain air bag deployment wires are shorted to ground, the system may become susceptible to unwanted deployment of the air bag(s). The air bag diagnostic monitor senses a short to ground on any of these circuits and helps prevent unwanted air bag deployment by opening the air bag diagnostic monitor thermal fuse. Opening this fuse removes all power (battery and backup power) from the air bag deployment circuits. While the short to ground exists, the air bag diagnostic monitor will flash LFC 13 or LFC 14, depending on where the short appears (refer to LFC 13 and 14 for more details). If the short to ground is intermittent and temporarily corrects itself, the air bag diagnostic monitor will flash LFC 51.

NOTE: If the short to ground returns, the higher priority LFC 13 or 14 will be flashed instead of LFC 51.

If the air bag indicator is flashing LFC 51 and a short to ground has not been serviced, this means that an intermittent short to ground exists in the air bag system. The air bag diagnostic monitor should be replaced only after service of the intermittent short has been completed.

Some service tips for finding an intermittent short to ground are:

- Consult OASIS (Restraint Systems Service Code 104000) for up-to-date diagnostics and descriptions of wiring concern locations for the vehicle (VIN number) on which you are working. OASIS is updated daily using concern descriptions from engineering and Dealership Service sources.
- Inspect wiring and harnesses in areas through which they pass or are located next to metal components (for example, the dash panel, body sheet metal or component mounting brackets).

LFC 51 After Air Bag Deployment:

Unlicensed Product Chrysler Motor Company

DIAGNOSIS AND TESTING (Continued)

NOTE: Air bag diagnostic monitors can withstand several air bag deployments and do not need to be replaced after every deployment. **Only replace the** air bag diagnostic monitor **if it is damaged.**

Occasionally, after an air bag deploys, the internal wiring of the air bag(s) may become shorted to the metal housings of the air bag(s). This internal air bag short is detected by the air bag diagnostic monitor as short to ground in the air bag deployment wiring. Since the air bag diagnostic monitor is still operating immediately after most deployments, the air bag diagnostic monitor will detect the shorted wiring and will flash LFC 13 or 14 and open the internal thermal fuse. After the deployment, as the air bag(s) cool off, the internal shorted wiring may correct itself. The short to ground will no longer exist and the air bag diagnostic monitor will flash LFC 51. If a vehicle with a deployed air bag is flashing LFC 51, inspect and replace all the damaged areas of the vehicle that have crushed wiring, sensors, etc. If no damage is found, assume that the deployed air bag was the cause for the intermittent short and replace the air bag diagnostic monitor when the new air bag module(s) are installed.

After a short to ground has been corrected, the air bag diagnostic monitor will flash out LFC 51. LFC 51 indicates that the thermal fuse inside the air bag diagnostic monitor is open and the short to ground no longer exists.

If a short to ground has not been located and serviced (short to ground corrected itself), consult OASIS for potential wiring shorts.

If a short to ground has been correctly located and serviced, replace the air bag diagnostic monitor. DO NOT replace the air bag diagnostic monitor until the short to ground has been positively located and serviced. Replacing the air bag diagnostic monitor before servicing a short to ground will result in repeat repair.

Pinpoint Test R: LFC 52 — Backup Power Supply Voltage Boost Fault

Normal Operation

A backup power supply is contained within the air bag diagnostic monitor that consists of a capacitor and a voltage boost circuit. The voltage boost circuit charges the capacitor to approximately 24 volts ± 1 volt when the ignition switch is turned to RUN. The backup power supply is connected through a diode to air bag diagnostic monitor Pin C277-15, Circuit 611 (W/O). The resistance of Circuit 611 (W/O) to ground is infinite since it is an open circuit. This open circuit allows the capacitor to maintain its higher voltage because there is no discharge path for the capacitor. The air bag diagnostic monitor measures the voltage on the backup power supply capacitor. If the voltage on the capacitor does not reach and maintain a minimum of 23 volts after approximately 45 seconds, the air bag diagnostic monitor will flash LFC 52 to indicate low voltage in the backup power supply voltage boost circuit.

Official Licensed Ford Motor Company Publication

DIAGNOSIS AND TESTING (Continued)

PINPOINT TEST R: LFC 52 — BACKUP POWER SUPPLY VOLTAGE BOOST FAULT

TEST CONDITIONS	TEST DETAILS/RESULTS/ACTIONS
R1 CHECK FOR LFC 52	
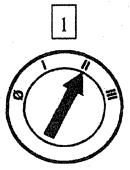 	2 Count the Lamp Fault Codes (LFC). • Is LFC 52 flashing? → **Yes** GO to **R2**. → **No** READ the Normal Operation description for this pinpoint test. CHECK for causes of intermittent conditions. DO NOT proceed unless LFC 52 is flashing. Failure to do so can result in unnecessary replacement of SRS components and repeat repair.
R2 CHECK CIRCUIT 611 (W/O) FOR VOLTAGE	
   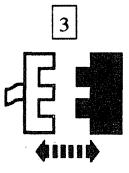 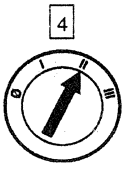 Air Bag Diagnostic Monitor C276 and C277	2 Deactivate the system. 4 Wait 45 seconds after turning key to RUN.

Ford Motor Company

(Continued)

DIAGNOSIS AND TESTING (Continued)

PINPOINT TEST R: LFC 52 — BACKUP POWER SUPPLY VOLTAGE BOOST FAULT (Continued)

TEST CONDITIONS	TEST DETAILS/RESULTS/ACTIONS
R2 CHECK CIRCUIT 611 (W/O) FOR VOLTAGE (Continued)	
5 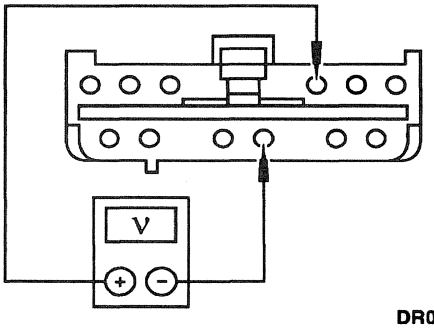 DR0595-A	5 Measure the voltage between Pin C277-15, Circuit 611 (W/O) and Pin C277-3, Circuit 57 (BK). • Is the voltage between 23 and 25 volts? → **Yes** REPLACE the air bag diagnostic monitor. RECONNECT the system. VERIFY the system. REACTIVATE the system. → **No** GO to **R3**.
R3 CHECK CIRCUIT 611 (W/O) FOR SHORT TO GROUND	
1 2 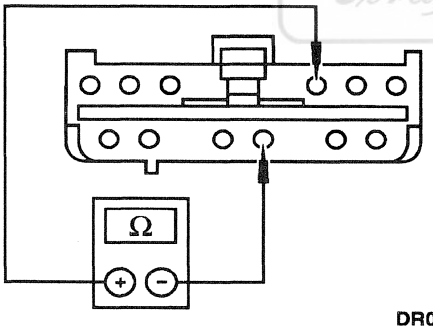 DR0596-A	2 Measure the resistance between Pin C277-15, Circuit 611 (W/O) and Pin C277-3, Circuit 57 (BK). • Is the resistance greater than 100,000 ohms? → **Yes** REPLACE the air bag diagnostic monitor. RECONNECT the system. VERIFY the system. REACTIVATE The system. → **No** GO to **R4**.

Official Licensed Product
Ford Motor Company

(Continued)

DIAGNOSIS AND TESTING (Continued)

PINPOINT TEST R: LFC 52 — BACKUP POWER SUPPLY VOLTAGE BOOST FAULT (Continued)

TEST CONDITIONS	TEST DETAILS/RESULTS/ACTIONS
R4 RECHECK CIRCUIT 611 (W/O) FOR SHORT TO GROUND	
1 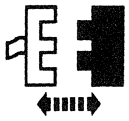 Air Bag Safing Sensor C235 2 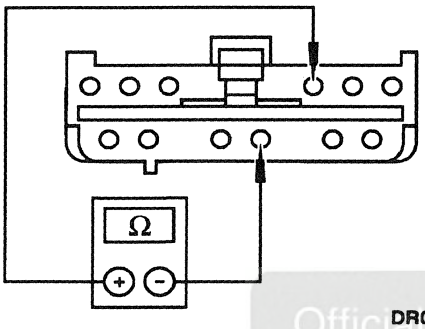 DR0596-A	2 Measure the resistance between Pin C277-15, Circuit 611 (W/O) and Pin C277-3, Circuit 57 (BK). • Is the resistance greater than 100,000 ohms? → **Yes** GO to **R5**. → **No** LOCATE and REPAIR the short to ground on Circuit 611 (W/O). RECONNECT the system. VERIFY the system. REACTIVATE the system.
R5 CHECK AIR BAG SAFING SENSOR CIRCUIT	
1 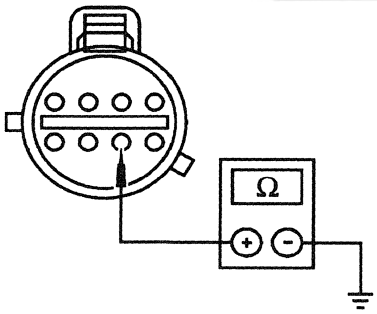 DR0597-A	1 Measure the resistance between Pin C235-7, Circuit 611 (W/O) and ground. • Is the resistance greater than 100,000 ohms? → **Yes** LOCATE and REPAIR the short to ground on Circuit 612 (P/O). RECONNECT the system. VERIFY the system. REACTIVATE the system. → **No** REPLACE the air bag safing sensor. RECONNECT the system. VERIFY the system. REACTIVATE the system.

Official Licensed Product
Ford Motor Company

DIAGNOSIS AND TESTING (Continued)

Pinpoint Test S: LFC 53 — Primary Crash Sensor Circuits Resistance to Ground or Air Bag Diagnostic Monitor Fault

Normal Operation

The normal voltage on Pins C277-2, C277-6, C277-17 and C277-18 is controlled by an internal resistor inside the air bag diagnostic monitor and is internally regulated to approximately 10 volts ± 1 volt. The resistance to ground from these pins in the air bag diagnostic monitor harness connector must be infinite. The resistance across the normally open contacts of the two primary crash sensors must also be infinite. The air bag diagnostic monitor measures the voltage on Pins C277-2, C277-6, C277-17 and C277-18. If there is any resistance to ground on any of these pins or across the primary crash sensor contacts, it will cause the diagnostic voltage on these pins to drop below normal levels. If the air bag diagnostic monitor measures that this voltage has dropped to between 5 and 10 volts, the air bag diagnostic monitor senses it has an internal voltage regulator failure and will flash LFC 53. Note that a direct short to ground in the primary crash sensor circuits will drop the voltage to less than 5 volts and the air bag diagnostic monitor will flash LFC 14 on the air bag indicator.

The air bag diagnostic monitor also performs several on-board diagnostics every time the ignition switch is turned to RUN. If any of these tests fail, the air bag diagnostic monitor will flash LFC 53 on the air bag indicator.

Possible Causes

A voltage drop in the primary crash sensor circuits or an internal air bag diagnostic monitor failure can be caused by:

- a partial drop in voltage in the primary crash sensor circuits due to resistance to ground on the primary crash sensor wiring or any resistance across the normally open primary crash sensor contacts.
- internal air bag diagnostic monitor on-board diagnostic failure.

Ford Licensed Product

PINPOINT TEST S: LFC 53 — PRIMARY CRASH SENSOR CIRCUITS RESISTANCE TO GROUND OR AIR BAG DIAGNOSTIC MONITOR FAULT

TEST CONDITIONS	TEST DETAILS/RESULTS/ACTIONS
S1 CHECK FOR LFC 53	
1 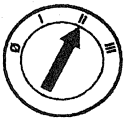	2 Count the Lamp Fault Codes (LFC). • Is LFC 53 flashing? → **Yes** GO to **S2**. → **No** READ the Normal Operation description for this pinpoint test. CHECK for causes of intermittent conditions. DO NOT proceed unless LFC 53 is flashing. Failure to do so can result in unnecessary replacement of SRS components and repeat repair.

(Continued)

DIAGNOSIS AND TESTING (Continued)

PINPOINT TEST S: LFC 53 — PRIMARY CRASH SENSOR CIRCUITS RESISTANCE TO GROUND OR AIR BAG DIAGNOSTIC MONITOR FAULT (Continued)

TEST CONDITIONS	TEST DETAILS/RESULTS/ACTIONS
S2 DETERMINE WHICH CIRCUIT IS SHORT TO GROUND	
1 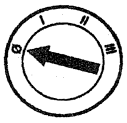	
	2 Deactivate the system. Leave the battery ground cable disconnected.
3 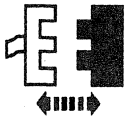 Air Bag Diagnostic Monitor C276 and C277	
	4 Carefully remove the connector locking wedge and shorting bar from C277.
5 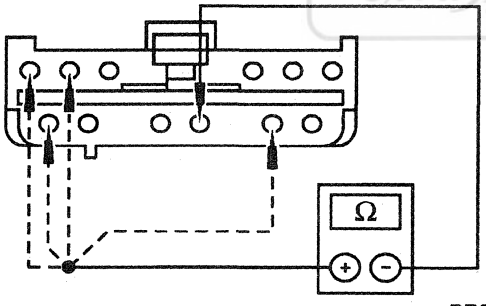 DR0575-A	5 Measure the resistance between Pins C277-2, Circuit 624 (Y/W), C277-6, Circuit 625 (Y/LG), C277-17, Circuit 617 (PK/O) and C277-18, Circuit 619 (PK/W) and Pin C277-3, Circuit 57 (BK). • Are all the resistance readings infinite? → **Yes** REPLACE the air bag diagnostic monitor. RECONNECT the system. VERIFY the system. REACTIVATE the system. → **No** GO to **S3**.
S3 DETERMINE IF THE PRIMARY CRASH SENSOR OR CIRCUIT IS SHORT TO GROUND	
1 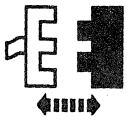 Suspect Primary Crash Sensor C133 or C138	1 Disconnect the suspect primary crash sensor(s) from Step S2.

(Continued)

Official Licensed Product
Ford Motor Company

DIAGNOSIS AND TESTING (Continued)

PINPOINT TEST S: LFC 53 — PRIMARY CRASH SENSOR CIRCUITS RESISTANCE TO GROUND OR AIR BAG DIAGNOSTIC MONITOR FAULT (Continued)

TEST CONDITIONS	TEST DETAILS/RESULTS/ACTIONS
S3 DETERMINE IF THE PRIMARY CRASH SENSOR OR CIRCUIT IS SHORT TO GROUND (Continued)	
2 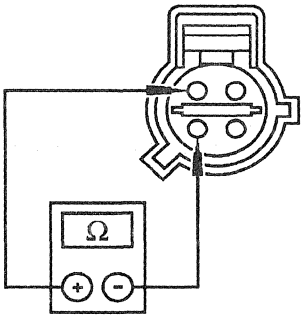 DR0538-A	2 Measure the resistance between C133, Circuit 617 (PK/O) and Circuit 618 (P/LG) for the RH primary crash sensor, or between C138, Circuit 619 (PK/W) and Circuit 620 (P/LB) for the LH primary crash sensor. • Is the resistance reading infinite? → **Yes** LOCATE and REPAIR short to ground on Circuit 617 (PK/O), Circuit 618 (P/LG), Circuit 619 (PK/W) or Circuit 620 (P/LB). RECONNECT the system. VERIFY the system. REACTIVATE the system. → **No** REPLACE the suspect primary crash sensor(s). RECONNECT the system. VERIFY the system. REACTIVATE the system.

Official Licensed Product
Ford Motor Company

Rapid Continuous Flashing of Air Bag Indicator (No LFC) — All Primary Crash Sensors Disconnected

Normal Operation

Each primary crash sensor has three wires. Two of the wires are used for air bag deployment and monitoring the sensor's connection to the air bag diagnostic monitor. The other wire is used for monitoring the mounting (ground) of the primary crash sensor to sheet metal. If diagnosis reveals that BOTH primary crash sensors are not connected AND the primary sensors are not properly grounded, the air bag diagnostic monitor will flash the air bag indicator continuously at a fast rate.

Possible Causes

All the primary crash sensors are disconnected from the wiring harness or the main wiring harness is not connected with the engine compartment wiring harness.

Refer to Pinpoint Tests N and O.

Refer to Pinpoint Tests P and Q.

REMOVAL AND INSTALLATION

Sensor — Primary Crash

Removal

WARNING: VEHICLE SENSOR ORIENTATION IS CRITICAL FOR PROPER SYSTEM OPERATION. IF A VEHICLE EQUIPPED WITH AN AIR BAG SUPPLEMENTAL RESTRAINT SYSTEM (SRS) IS INVOLVED IN A COLLISION, INSPECT THE SENSOR MOUNTING BRACKET AND WIRING PIGTAIL FOR DEFORMATION. IF DAMAGED, THE SENSOR SHOULD BE REPLACED WHETHER OR NOT THE AIR BAG IS DEPLOYED.

WARNING: TO AVOID ACCIDENTAL DEPLOYMENT AND POSSIBLE PERSONAL INJURY, THE BACKUP POWER SUPPLY MUST BE DEPLETED BEFORE REPAIRING OR REPLACING ANY AIR BAG SUPPLEMENTAL RESTRAINT SYSTEM (SRS) COMPONENTS. TO DEPLETE THE BACKUP POWER SUPPLY ENERGY, DISCONNECT THE BATTERY GROUND CABLE AND WAIT ONE MINUTE. BE SURE TO DISCONNECT AUXILIARY BATTERIES AND POWER SUPPLIES (IF SO EQUIPPED).

Official Licensed Product
Ford Motor Company

1. Disconnect the battery ground cable (14301); refer to Section 414-01.

2. **NOTE:** Access to the LH primary crash front air bag sensor and bracket (14B005) connector requires removal of the battery.

   Remove the battery (10655) if required; refer to Section 414-01.

3. Remove the radiator upper sight shield (8C291).

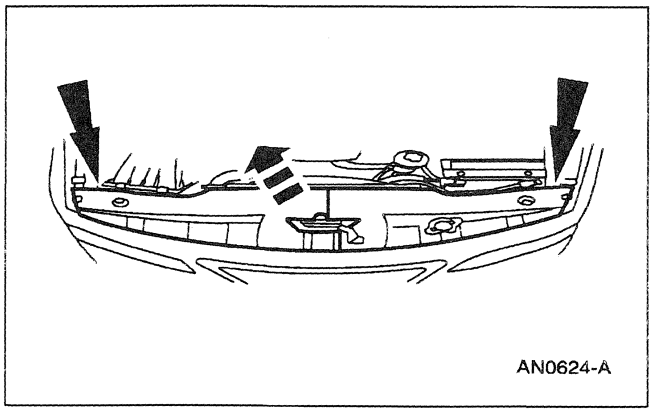

REMOVAL AND INSTALLATION (Continued)

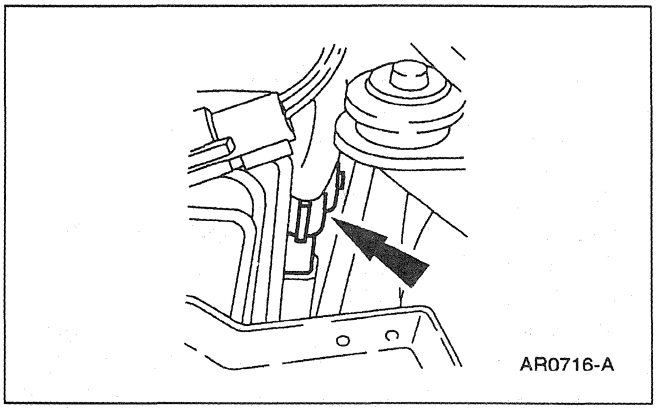

4. Disconnect the primary crash sensor electrical connector.

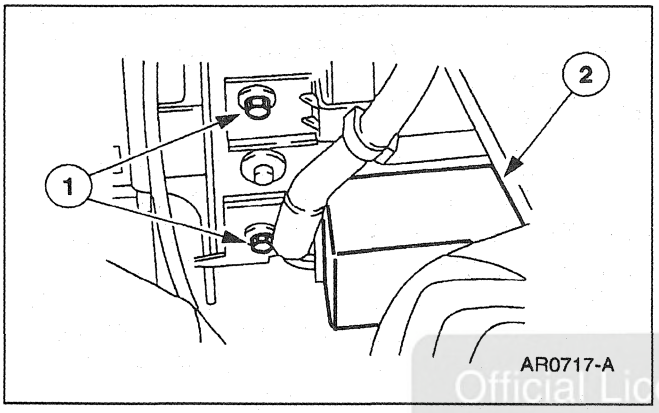

5. Remove the primary crash front air bag sensor and bracket (14B004).
   1 Remove the screws.
   2 Remove the primary crash front air bag sensor and bracket.

Official Licensed Product
Ford Motor Company

REMOVAL AND INSTALLATION (Continued)

Installation

WARNING: VEHICLE SENSOR ORIENTATION IS CRITICAL FOR PROPER SYSTEM OPERATION. IF A VEHICLE EQUIPPED WITH AN AIR BAG SUPPLEMENTAL RESTRAINT SYSTEM (SRS) IS INVOLVED IN A COLLISION, INSPECT THE SENSOR MOUNTING BRACKET AND WIRING PIGTAIL FOR DEFORMATION. IF DAMAGED, THE SENSOR SHOULD BE REPLACED WHETHER OR NOT THE AIR BAG IS DEPLOYED.

NOTE: A repair is made by replacement only. If a part is replaced and the new part does not correct the condition, install the original part and perform the diagnostic procedure again.

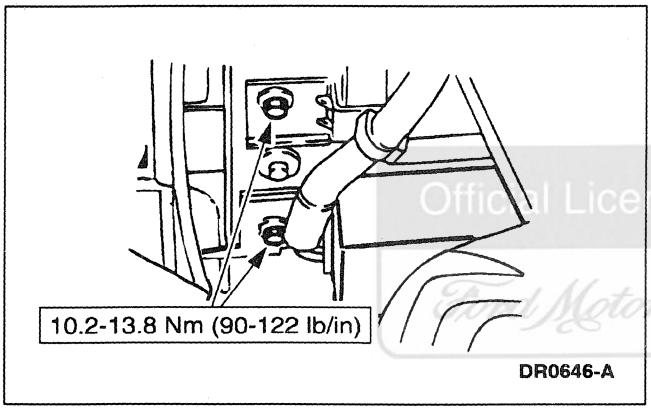

1. Follow the removal procedure in reverse order.

Official Licensed Product
Ford Motor Company

REMOVAL AND INSTALLATION (Continued)

Sensor — Air Bag Safing

Removal

WARNING: VEHICLE SENSOR ORIENTATION IS CRITICAL FOR PROPER SYSTEM OPERATION. IF A VEHICLE EQUIPPED WITH AN AIR BAG SUPPLEMENTAL RESTRAINT SYSTEM (SRS) IS INVOLVED IN A COLLISION, INSPECT THE SENSOR MOUNTING BRACKET AND WIRING PIGTAIL FOR DEFORMATION. IF DAMAGED, THE SENSOR SHOULD BE REPLACED WHETHER OR NOT THE AIR BAG IS DEPLOYED.

WARNING: TO AVOID ACCIDENTAL DEPLOYMENT AND POSSIBLE PERSONAL INJURY, THE BACKUP POWER SUPPLY MUST BE DEPLETED BEFORE REPAIRING OR REPLACING ANY AIR BAG SUPPLEMENTAL RESTRAINT SYSTEM (SRS) COMPONENTS. TO DEPLETE THE BACKUP POWER SUPPLY ENERGY, DISCONNECT THE BATTERY GROUND CABLE AND WAIT ONE MINUTE. BE SURE TO DISCONNECT AUXILIARY BATTERIES AND POWER SUPPLIES (IF SO EQUIPPED).

Official Licensed Service
Ford Motor Company

1. Disconnect the battery ground cable (14301); refer to Section 414-01.

2. Remove the LH cowl side trim panel (02344).

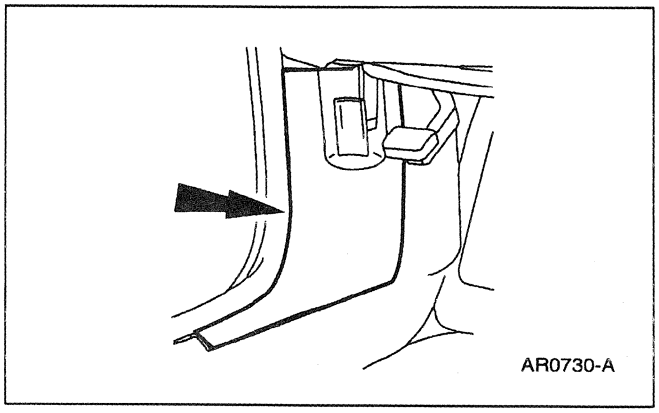

REMOVAL AND INSTALLATION (Continued)

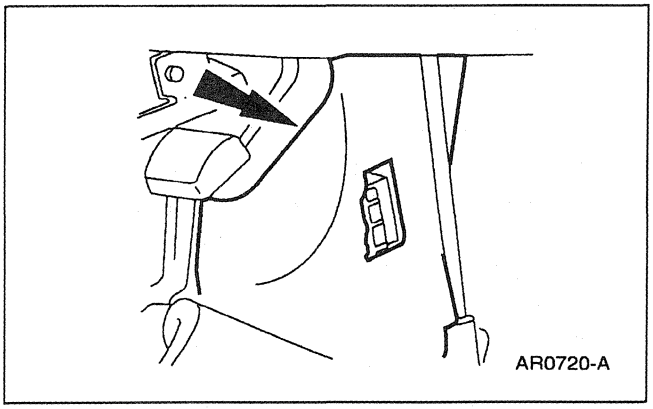

3. Move the insulating panel out of the way.

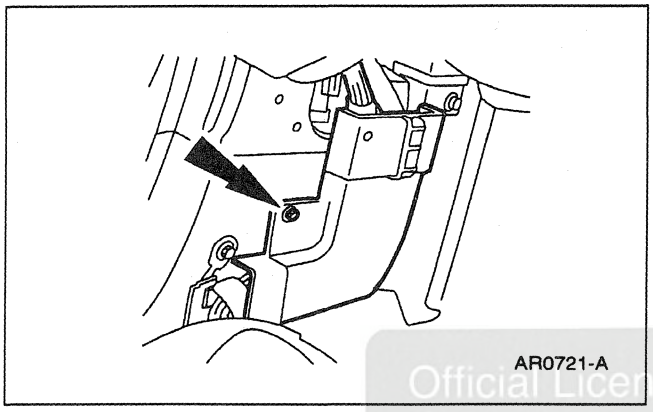

4. Remove the screw and move the wiring track out of the way.

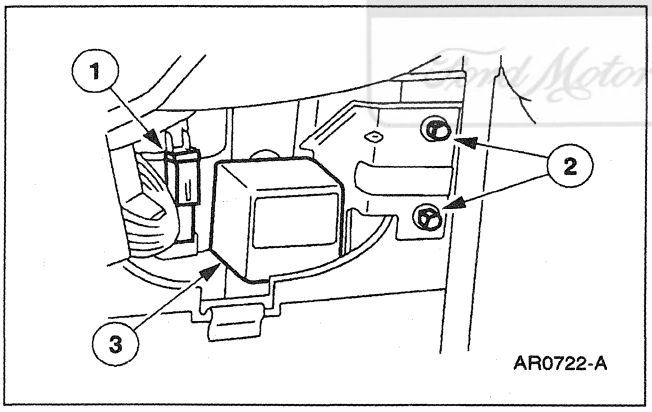

5. Remove the safing rear air bag sensor and bracket (14B007).
   1 Disconnect the safing sensor electrical connector.
   2 Remove the screws.
   3 Remove the safing rear air bag sensor and bracket.

Official Licensed Product
Ford Motor Company

REMOVAL AND INSTALLATION (Continued)

Installation

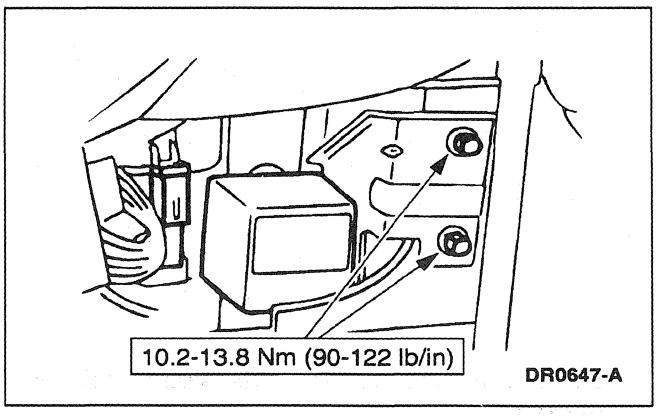

1. **WARNING: VEHICLE SENSOR ORIENTATION IS CRITICAL FOR PROPER SYSTEM OPERATION. IF A VEHICLE EQUIPPED WITH AN AIR BAG SUPPLEMENTAL RESTRAINT SYSTEM (SRS) IS INVOLVED IN A COLLISION, INSPECT THE SENSOR MOUNTING BRACKET AND WIRING PIGTAIL FOR DEFORMATION. IF DAMAGED, THE SENSOR SHOULD BE REPLACED WHETHER OR NOT THE AIR BAG IS DEPLOYED.**

   NOTE: A repair is made by replacement only. If a part is replaced and the new part does not correct the condition, install the original part and perform the diagnostic procedure again.

   Follow the removal procedure in reverse order.

Official Licensed Product
Ford Motor Company

Diagnostic Monitor — Air Bag

Removal

WARNING: TO AVOID ACCIDENTAL DEPLOYMENT AND POSSIBLE PERSONAL INJURY, THE BACKUP POWER SUPPLY MUST BE DEPLETED BEFORE REPAIRING OR REPLACING ANY AIR BAG SUPPLEMENTAL RESTRAINT SYSTEM (SRS) COMPONENTS. TO DEPLETE THE BACKUP POWER SUPPLY ENERGY, DISCONNECT THE BATTERY GROUND CABLE AND WAIT ONE MINUTE. BE SURE TO DISCONNECT AUXILIARY BATTERIES AND POWER SUPPLIES (IF SO EQUIPPED).

CAUTION: Electronic modules are sensitive to static electrical charges. If exposed to these charges, damage can result.

1. Disconnect the battery ground cable (14301); refer to Section 414-01.

2. Remove the message center; refer to Section 413-08.

REMOVAL AND INSTALLATION (Continued)

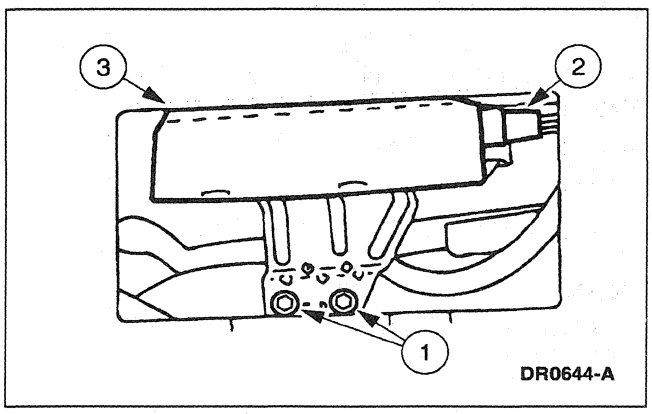

3. Remove the radio; refer to Section 415-01.
4. Remove the air bag diagnostic monitor (14B056).
   1 Remove the screws.
   2 Disconnect the electrical connectors.
   3 Remove the air bag diagnostic monitor.

Installation

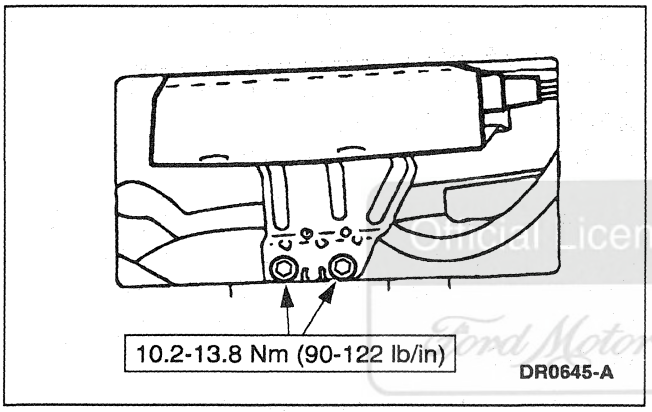

1. Follow the removal procedure in reverse order.

Ford Motor Company Licensed Product

Module — Driver Air Bag

Removal

WARNING: ALWAYS WEAR SAFETY GLASSES WHEN REPAIRING AN AIR BAG SUPPLEMENTAL RESTRAINT SYSTEM (SRS) VEHICLE AND WHEN HANDLING AN AIR BAG MODULE.

WARNING: CARRY A LIVE AIR BAG MODULE WITH THE AIR BAG AND TRIM COVER POINTED AWAY FROM YOUR BODY. THIS WILL REDUCE THE RISK OF INJURY IN THE EVENT OF AN ACCIDENTAL DEPLOYMENT.

WARNING: DO NO SET A LIVE AIR BAG MODULE DOWN WITH THE TRIM COVER FACE DOWN.

REMOVAL AND INSTALLATION (Continued)

WARNING: AFTER DEPLOYMENT, THE AIR BAG SURFACE CAN CONTAIN DEPOSITS OF SODIUM HYDROXIDE, A PRODUCT OF THE GAS GENERANT COMBUSTION THAT IS IRRITATING TO THE SKIN. WASH YOUR HANDS WITH SOAP AND WATER AFTERWARDS.

WARNING: NEVER PROBE THE CONNECTORS ON THE AIR BAG MODULE. DOING SO CAN RESULT IN AIR BAG DEPLOYMENT, WHICH CAN RESULT IN PERSONAL INJURY.

WARNING: AIR BAG MODULES WITH DISCOLORED OR DAMAGED TRIM COVERS MUST BE REPLACED, NOT REPAINTED.

WARNING: VEHICLE SENSOR ORIENTATION IS CRITICAL FOR PROPER SYSTEM OPERATION. IF A VEHICLE EQUIPPED WITH AN AIR BAG SUPPLEMENTAL RESTRAINT SYSTEM (SRS) IS INVOLVED IN A COLLISION, INSPECT THE SENSOR MOUNTING BRACKET AND WIRING PIGTAIL FOR DEFORMATION. IF DAMAGED, THE SENSOR SHOULD BE REPLACED WHETHER OR NOT THE AIR BAG IS DEPLOYED.

WARNING: TO AVOID ACCIDENTAL DEPLOYMENT AND POSSIBLE PERSONAL INJURY, THE BACKUP POWER SUPPLY MUST BE DEPLETED BEFORE REPAIRING OR REPLACING ANY AIR BAG SUPPLEMENTAL RESTRAINT SYSTEM (SRS) COMPONENTS. TO DEPLETE THE BACKUP POWER SUPPLY ENERGY, DISCONNECT THE BATTERY GROUND CABLE AND WAIT ONE MINUTE. BE SURE TO DISCONNECT AUXILIARY BATTERIES AND POWER SUPPLIES (IF SO EQUIPPED).

NOTE: A repair is made by replacement only. If a part is replaced and the new part does not correct the condition, install the original part and perform the diagnostic procedure again.

1. Disconnect the battery ground cable (14301); refer to Section 414-01.

Official Licen... Ford Motor...

REMOVAL AND INSTALLATION (Continued)

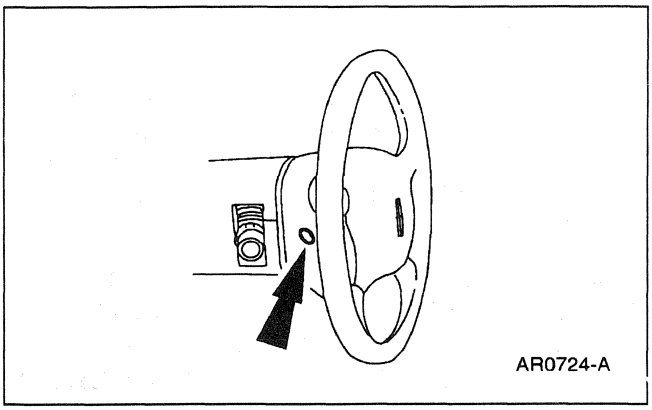

2. Remove the two steering wheel back cover plugs.

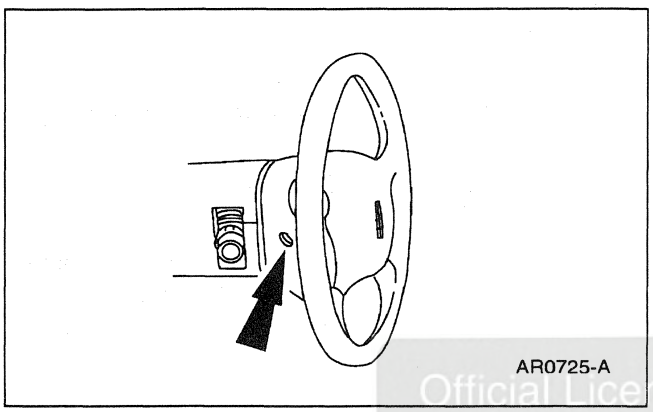

3. Remove the two screw and washer assemblies.

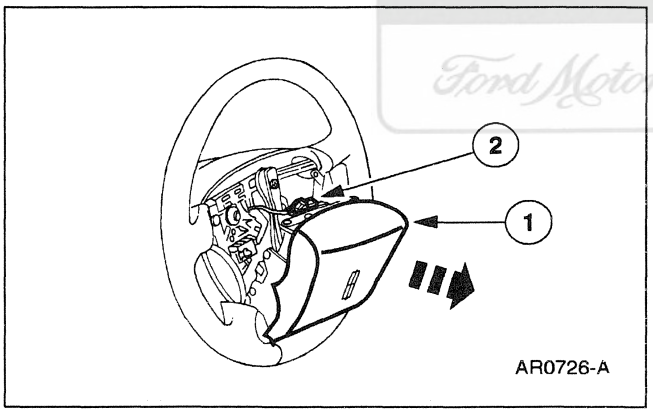

4. Remove the driver air bag module.
   1 Carefully pull the driver air bag module away from the steering wheel (3600).
   2 Disconnect the driver air bag electrical connector.

Official Licensed Product
Ford Motor Company

REMOVAL AND INSTALLATION (Continued)

Installation

WARNING: ALWAYS WEAR SAFETY GLASSES WHEN REPAIRING AN AIR BAG SUPPLEMENTAL RESTRAINT SYSTEM (SRS) VEHICLE AND WHEN HANDLING AN AIR BAG MODULE.

WARNING: CARRY A LIVE AIR BAG MODULE WITH THE AIR BAG AND TRIM COVER POINTED AWAY FROM YOUR BODY. THIS WILL REDUCE THE RISK OF INJURY IN THE EVENT OF AN ACCIDENTAL DEPLOYMENT.

WARNING: NEVER PROBE THE CONNECTORS ON THE AIR BAG MODULE. DOING SO CAN RESULT IN AIR BAG DEPLOYMENT, WHICH CAN RESULT IN PERSONAL INJURY.

NOTE: A repair is made by replacement only. If a part is replaced and the new part does not correct the condition, install the original part and perform the diagnostic procedure again.

Official Licensed Product Ford Motor Company

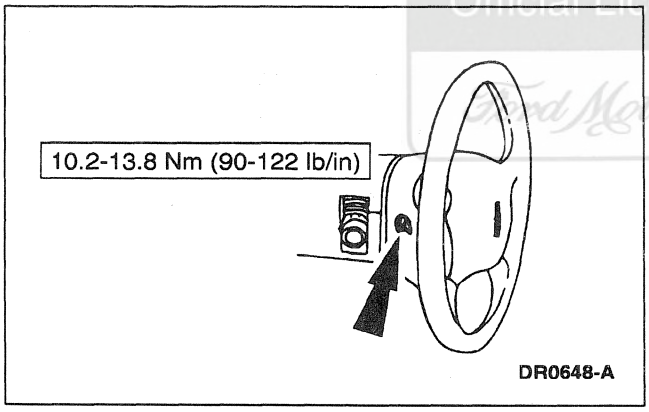

1. Follow the removal procedure in reverse order.

REMOVAL AND INSTALLATION (Continued)

Module — Passenger Air Bag

Removal

WARNING: ALWAYS WEAR SAFETY GLASSES WHEN REPAIRING AN AIR BAG SUPPLEMENTAL RESTRAINT SYSTEM (SRS) VEHICLE AND WHEN HANDLING AN AIR BAG MODULE.

WARNING: CARRY A LIVE AIR BAG MODULE WITH THE AIR BAG AND DEPLOYMENT DOOR POINTED AWAY FROM YOUR BODY. THIS WILL REDUCE THE RISK OF INJURY IN THE EVENT OF AN ACCIDENTAL DEPLOYMENT.

WARNING: DO NOT SET A LIVE AIR BAG MODULE DOWN WITH THE DEPLOYMENT DOOR FACE DOWN.

WARNING: AFTER DEPLOYMENT, THE AIR BAG SURFACE CAN CONTAIN DEPOSITS OF SODIUM HYDROXIDE, A PRODUCT OF THE GAS GENERANT COMBUSTION THAT IS IRRITATING TO THE SKIN. WASH YOUR HANDS WITH SOAP AND WATER AFTERWARDS.

Official Licensed Product
Ford Motor Company

WARNING: NEVER PROBE THE CONNECTORS ON THE AIR BAG MODULE. DOING SO CAN RESULT IN AIR BAG DEPLOYMENT, WHICH CAN RESULT IN PERSONAL INJURY.

WARNING: AIR BAG MODULES WITH DISCOLORED OR DAMAGED DEPLOYMENT DOORS MUST BE REPLACED, NOT REPAINTED.

WARNING: VEHICLE SENSOR ORIENTATION IS CRITICAL FOR PROPER SYSTEM OPERATION. IF A VEHICLE EQUIPPED WITH AN AIR BAG SUPPLEMENTAL RESTRAINT SYSTEM (SRS) IS INVOLVED IN A COLLISION, INSPECT THE SENSOR MOUNTING BRACKET AND WIRING PIGTAIL FOR DEFORMATION. IF DAMAGED, THE SENSOR SHOULD BE REPLACED WHETHER OR NOT THE AIR BAG IS DEPLOYED.

REMOVAL AND INSTALLATION (Continued)

⚠ WARNING: TO AVOID ACCIDENTAL DEPLOYMENT AND POSSIBLE PERSONAL INJURY, THE BACKUP POWER SUPPLY MUST BE DEPLETED BEFORE REPAIRING OR REPLACING ANY AIR BAG SUPPLEMENTAL RESTRAINT SYSTEM (SRS) COMPONENTS. TO DEPLETE THE BACKUP POWER SUPPLY ENERGY, DISCONNECT THE BATTERY GROUND CABLE AND WAIT ONE MINUTE. BE SURE TO DISCONNECT AUXILIARY BATTERIES AND POWER SUPPLIES (IF SO EQUIPPED).

NOTE: A repair is made by replacement only. If a part is replaced and the new part does not correct the condition, install the original part and perform the diagnostic procedure again.

1. Disconnect the battery ground cable (14301); refer to Section 414-01.

2. Remove the instrument cluster finish panel; refer to Section 501-12.

Official Licensed Product Ford Motor Company

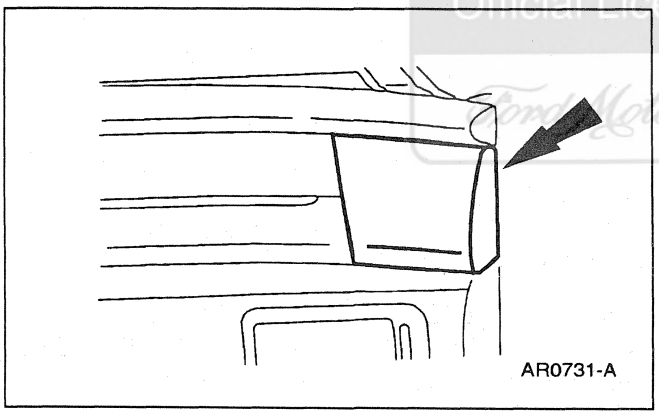

3. Remove the RH instrument panel finish panel (04338).

4. Lower the glove compartment (06010).

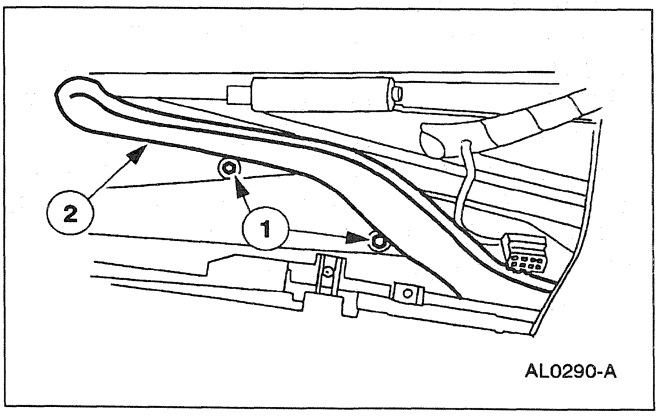

5. Remove the A/C evaporator register duct (19B680).
   1 Remove the screws.
   2 Remove the A/C evaporator register duct.

REMOVAL AND INSTALLATION (Continued)

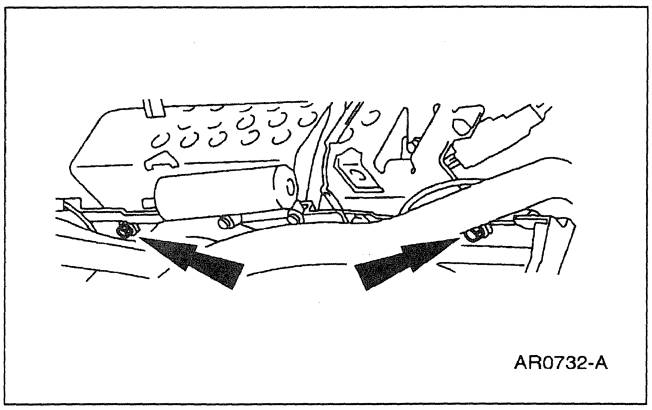

AR0732-A

6. Remove the screws.

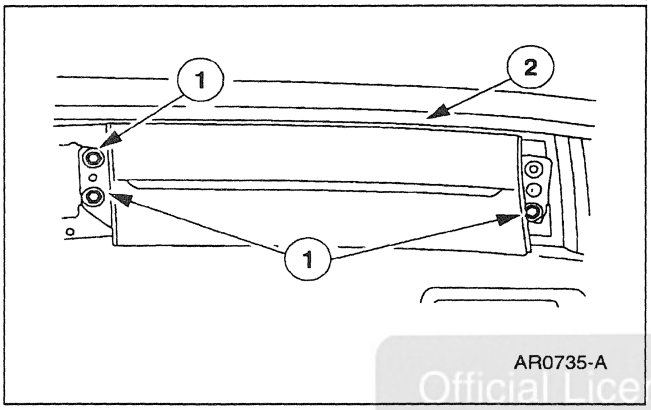

AR0735-A

7. Remove the passenger air bag module.
   1 Remove the screws.
   2 Disconnect the connector and remove the passenger air bag module.

Official Licensed Product
Ford Motor Company

Installation

WARNING: ALWAYS WEAR SAFETY GLASSES WHEN REPAIRING AN AIR BAG SUPPLEMENTAL RESTRAINT SYSTEM (SRS) VEHICLE AND WHEN HANDLING AN AIR BAG MODULE.

WARNING: CARRY A LIVE AIR BAG MODULE WITH THE AIR BAG AND DEPLOYMENT DOOR POINTED AWAY FROM YOUR BODY. THIS WILL REDUCE THE RISK OF INJURY IN THE EVENT OF AN ACCIDENTAL DEPLOYMENT.

WARNING: NEVER PROBE THE CONNECTORS ON THE AIR BAG MODULE. DOING SO CAN RESULT IN AIR BAG DEPLOYMENT, WHICH CAN RESULT IN PERSONAL INJURY.

NOTE: A repair is made by replacement only. If a part is replaced and the new part does not correct the condition, install the original part and perform the diagnostic procedure again.

REMOVAL AND INSTALLATION (Continued)

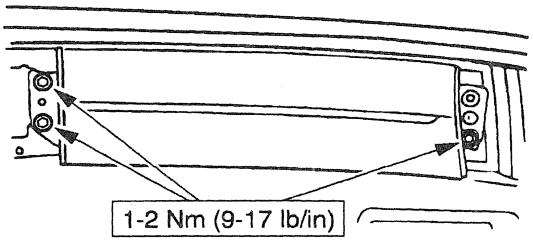

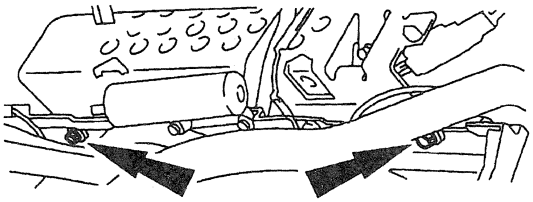

1. Follow the removal procedure in reverse order.

Official Licensed Product
Ford Motor Company

Air Bag Sliding Contact

Removal

WARNING: ALWAYS WEAR SAFETY GLASSES WHEN REPAIRING AN AIR BAG SUPPLEMENTAL RESTRAINT SYSTEM (SRS) VEHICLE AND WHEN HANDLING AN AIR BAG MODULE.

WARNING: CARRY A LIVE AIR BAG MODULE WITH THE AIR BAG AND DEPLOYMENT DOOR POINTED AWAY FROM YOUR BODY. THIS WILL REDUCE THE RISK OF INJURY IN THE EVENT OF AN ACCIDENTAL DEPLOYMENT.

WARNING: DO NO SET A LIVE AIR BAG MODULE DOWN WITH THE DEPLOYMENT DOOR FACE DOWN.

REMOVAL AND INSTALLATION (Continued)

WARNING: AFTER DEPLOYMENT, THE AIR BAG SURFACE CAN CONTAIN DEPOSITS OF SODIUM HYDROXIDE, A PRODUCT OF THE GAS GENERANT COMBUSTION THAT IS IRRITATING TO THE SKIN. WASH YOUR HANDS WITH SOAP AND WATER AFTERWARDS.

WARNING: NEVER PROBE THE CONNECTORS ON THE AIR BAG MODULE. DOING SO CAN RESULT IN AIR BAG DEPLOYMENT, WHICH CAN RESULT IN PERSONAL INJURY.

WARNING: AIR BAG MODULES WITH DISCOLORED OR DAMAGED TRIM COVERS MUST BE REPLACED, NOT REPAINTED.

WARNING: VEHICLE SENSOR ORIENTATION IS CRITICAL FOR PROPER SYSTEM OPERATION. IF A VEHICLE EQUIPPED WITH AN AIR BAG SUPPLEMENTAL RESTRAINT SYSTEM (SRS) IS INVOLVED IN A COLLISION, INSPECT THE SENSOR MOUNTING BRACKET AND WIRING PIGTAIL FOR DEFORMATION. IF DAMAGED, THE SENSOR SHOULD BE REPLACED WHETHER OR NOT THE AIR BAG IS DEPLOYED.

Official Licensed Product
Ford Motor Company

WARNING: TO AVOID ACCIDENTAL DEPLOYMENT AND POSSIBLE PERSONAL INJURY, THE BACKUP POWER SUPPLY MUST BE DEPLETED BEFORE REPAIRING OR REPLACING ANY AIR BAG SUPPLEMENTAL RESTRAINT SYSTEM (SRS) COMPONENTS. TO DEPLETE THE BACKUP POWER SUPPLY ENERGY, DISCONNECT THE BATTERY GROUND CABLE AND WAIT ONE MINUTE. BE SURE TO DISCONNECT AUXILIARY BATTERIES AND POWER SUPPLIES (IF SO EQUIPPED).

NOTE: A repair is made by replacement only. If a part is replaced and the new part does not correct the condition, install the original part and perform the diagnostic procedure again.

1. Disconnect the battery ground cable; refer to Section 414-01.

2. Remove the steering wheel (3600); refer to Section 211-04.

REMOVAL AND INSTALLATION (Continued)

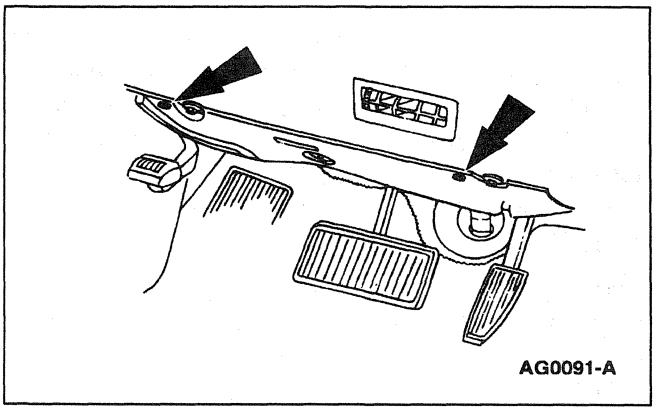

3. Remove the two lower instrument panel insulator retaining screws.

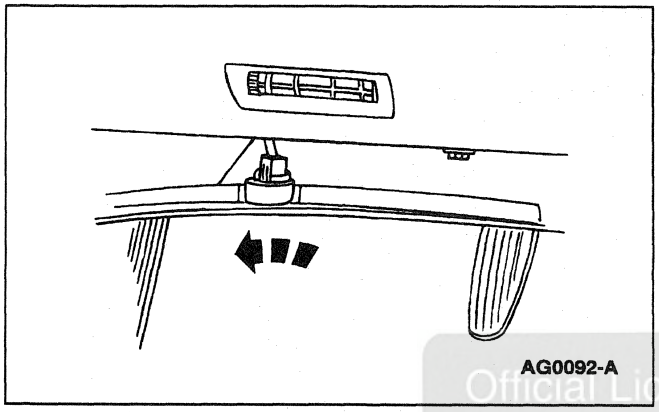

4. Remove the courtesy light and place the lower instrument panel insulator out of the way.

Official Licensed Product
Ford Motor Company

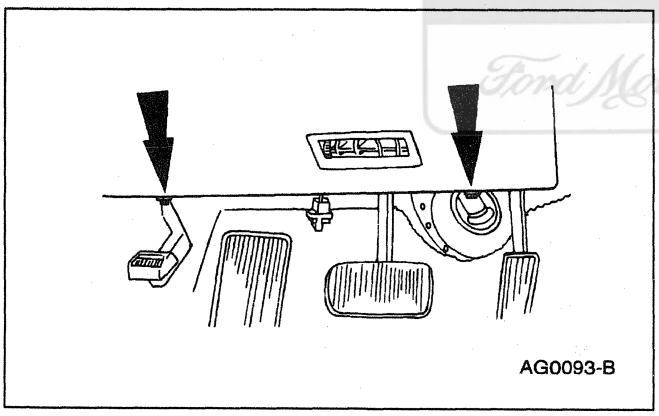

5. Remove the two instrument panel steering column cover retaining screws and place the instrument panel steering column cover (04459) out of way.

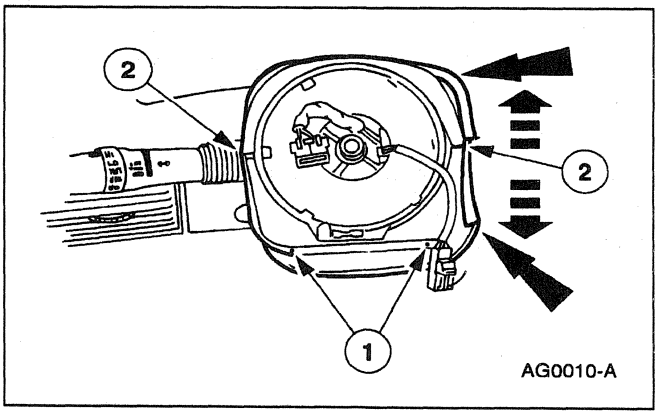

6. Remove the steering column shroud (3530).
   1 Remove the steering column shroud retaining screws.
   2 Separate the upper and lower halves of the steering column shroud and place out of way.

REMOVAL AND INSTALLATION (Continued)

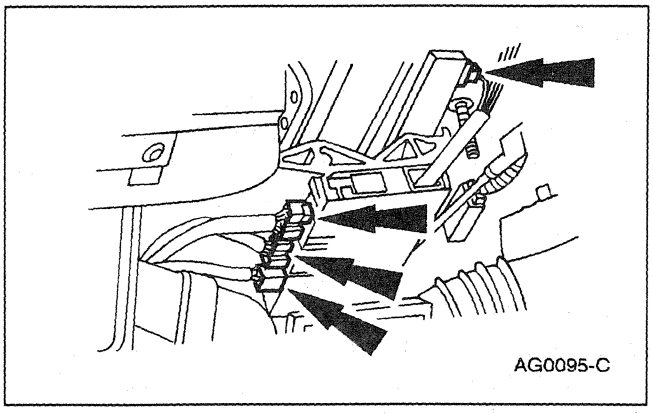
AG0095-C

7. Working under the steering column, disconnect the three electrical connectors at the junction box and one electrical connector at the steering column potentiometer.

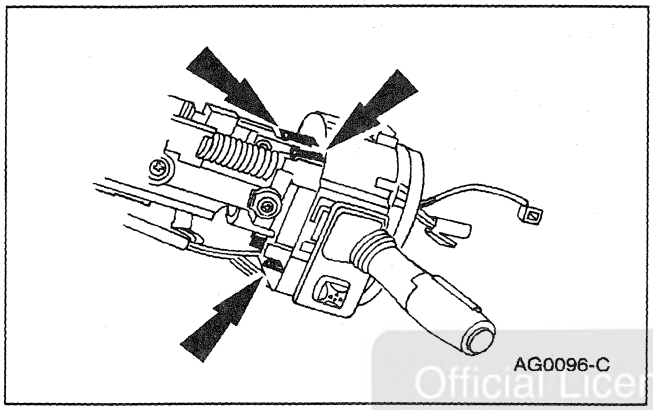
AG0096-C

8. Release the three plastic clips retaining the multi-function switch (13K359) to the steering column.

Official Licensed Product
Ford Motor Company

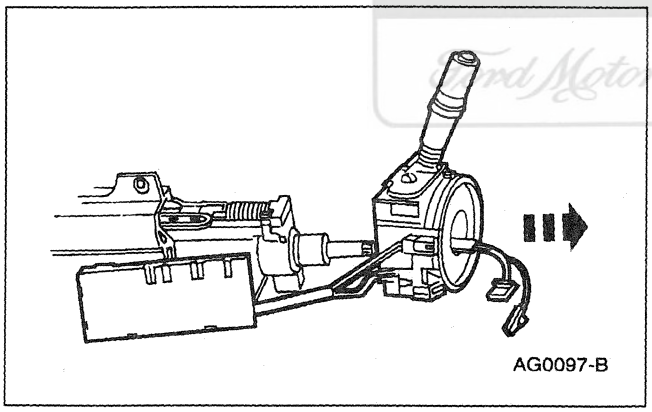
AG0097-B

9. Remove the multi-function switch, air bag sliding contact (14A664) and the electrical connector junction box as an assembly from the steering column.

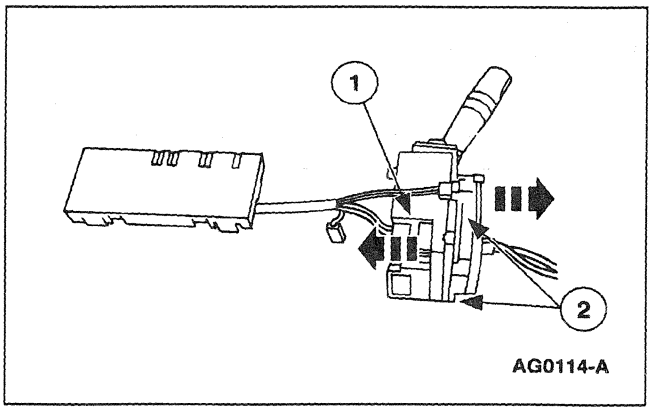

AG0114-A

10. Separate the air bag sliding contact from the multi-function switch.
    1 Disconnect the electrical connector from the multi-function switch.
    2 Release the four plastic clips retaining the air bag sliding contact to the multi-function switch, remove the air bag sliding contact and the wire harness.

REMOVAL AND INSTALLATION (Continued)

Installation

WARNING: ALWAYS WEAR SAFETY GLASSES WHEN REPAIRING AN AIR BAG SUPPLEMENTAL RESTRAINT SYSTEM (SRS) VEHICLE AND WHEN HANDLING AN AIR BAG MODULE.

WARNING: CARRY A LIVE AIR BAG MODULE WITH THE AIR BAG AND DEPLOYMENT DOOR POINTED AWAY FROM YOUR BODY. THIS WILL REDUCE THE RISK OF INJURY IN THE EVENT OF AN ACCIDENTAL DEPLOYMENT.

WARNING: NEVER PROBE THE CONNECTORS ON THE AIR BAG MODULE. DOING SO CAN RESULT IN AIR BAG DEPLOYMENT, WHICH CAN RESULT IN PERSONAL INJURY.

NOTE: A repair is made by replacement only. If a part is replaced and the new part does not correct the condition, install the original part and perform the diagnostic procedure again.

1. Follow the removal procedure in reverse order.

Official Licensed Product
Ford Motor Company

GENERAL PROCEDURES

Air Bag Disposal

Deployed Air Bag

WARNING: ALWAYS WEAR SAFETY GLASSES WHEN REPAIRING AN AIR BAG SUPPLEMENTAL RESTRAINT SYSTEM (SRS) VEHICLE AND WHEN HANDLING AN AIR BAG MODULE.

1. Dispose of the deployed air bag modules in the same manner as any other part to be scrapped.

GENERAL PROCEDURES (Continued)

Undeployed Air Bag — Inoperative

⚠ WARNING: CARRY A LIVE AIR BAG MODULE WITH THE AIR BAG AND TRIM COVER OR DEPLOYMENT DOOR POINTED AWAY FROM YOUR BODY. THIS WILL REDUCE THE RISK OF INJURY IN THE EVENT OF AN ACCIDENTAL DEPLOYMENT.

NOTE: All inoperative air bag modules have been placed on the Mandatory Return List. All discolored or damaged air bag modules should be treated the same as any inoperative live air bag being returned.

1. Remove the inoperative driver air bag module or passenger air bag module; refer to Module — Driver Air Bag or Module — Passenger Air Bag in this section.

NOTE: When replacing an air bag module, a prepaid return postcard is provided with the replacement air bag module. The serial number for the new part and the vehicle identification number (VIN) must be recorded and sent to Ford Motor Company.

Official Licensed Product Ford Motor Company

2. When replacing the driver air bag module, record the necessary information and return the inoperative driver air bag module to Ford Motor Company.

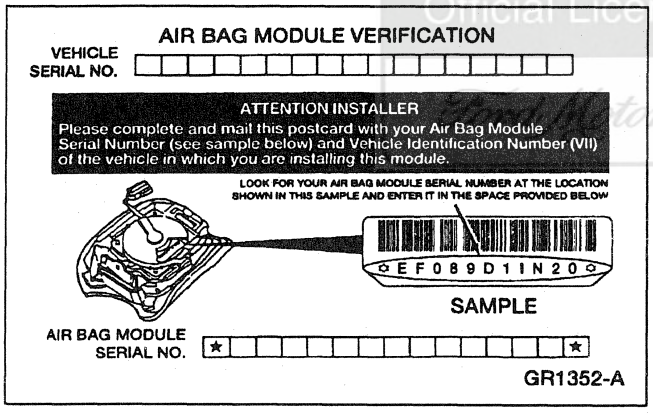

3. When replacing the passenger air bag module, record the necessary information and return the inoperative passenger air bag module to Ford Motor Company.

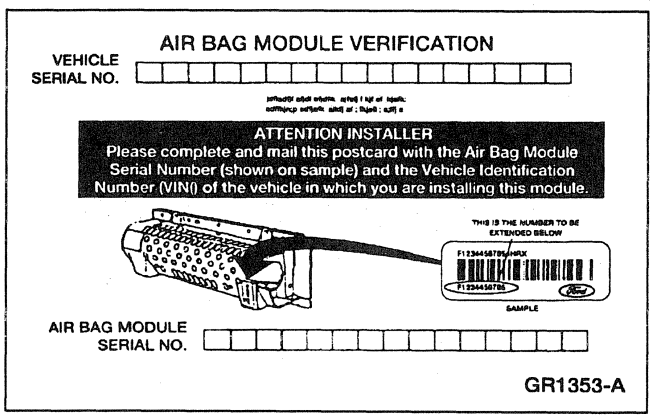

GENERAL PROCEDURES (Continued)

Undeployed Air Bag — Scrapped Vehicle

Remote Deployment

WARNING: ALWAYS WEAR SAFETY GLASSES WHEN REPAIRING AN AIR BAG SUPPLEMENTAL RESTRAINT SYSTEM (SRS) VEHICLE AND WHEN HANDLING AN AIR BAG MODULE.

WARNING: CARRY A LIVE AIR BAG MODULE WITH THE AIR BAG AND TRIM COVER OR DEPLOYMENT DOOR POINTED AWAY FROM YOUR BODY. THIS WILL REDUCE THE RISK OF INJURY IN THE EVENT OF AN ACCIDENTAL DEPLOYMENT.

WARNING: REMOTE DEPLOYMENT IS TO BE PERFORMED OUTDOORS WITH ALL PERSONNEL AT LEAST 6.1 METERS (20 FEET) AWAY TO ENSURE PERSONAL SAFETY. DUE TO THE LOUD REPORT WHICH OCCURS WHEN THE AIR BAG IS DEPLOYED, HEARING PROTECTION IS REQUIRED.

WARNING: DO NOT PLACE THE DRIVER OR PASSENGER AIR BAG MODULE WITH THE TRIM COVER OR DEPLOYMENT DOOR FACING DOWN, AS THE FORCES OF THE DEPLOYING AIR BAG CAN CAUSE IT TO RICOCHET AND CAUSE PERSONAL INJURY.

NOTE: The passenger air bag module is shown; the driver air bag module is similar.

1. Remove the passenger air bag module; refer to Module — Passenger Air Bag in this section.

2. Cut the two connector wires on the passenger air bag module, and strip 25 mm (1 inch) of insulation from the ends of the wires.

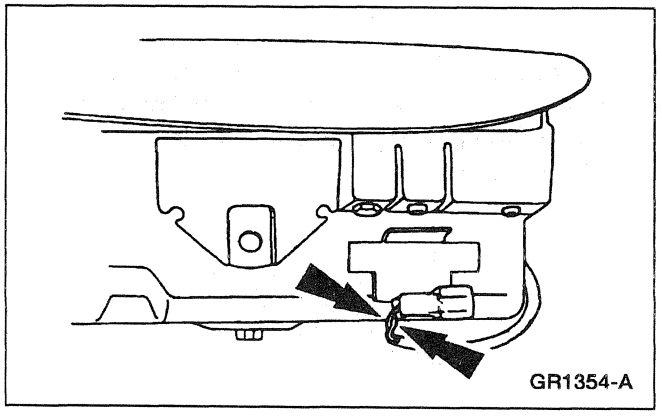

Official Licensed Manual
Ford Motor Company

GENERAL PROCEDURES (Continued)

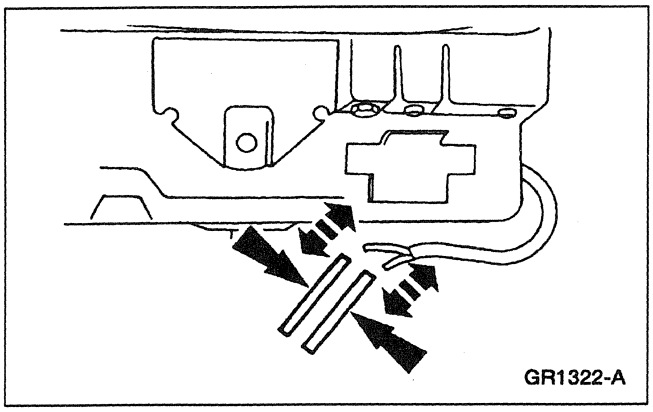

3. Obtain two wires at least 6.1 meters (20 feet) long and connect one end of each wire to each of the wires on the passenger air bag module.

4. Place the passenger air bag module on a flat surface with the deployment door facing upward in an open outdoor area.

5. Remain at least 6.1 meters (20 feet) away from the passenger air bag module.

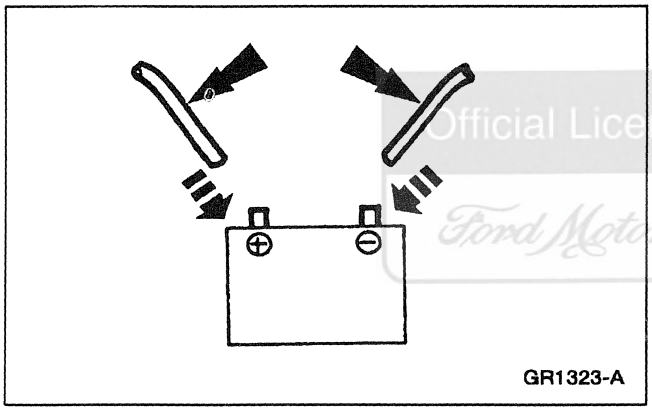

6. Deploy the air bag by touching the other ends of the two wires to the terminals of a 12-volt battery.

Official Licensed Product
Ford Motor Company

7. Allow at least ten minutes before approaching the deployed air bag to allow for cooling.

8. Dispose of the deployed air bag module in the same manner as any other part to be scrapped.

SPECIFICATIONS

Torque Specifications

Description	Nm	Lb/In
Air Bag Diagnostic Monitor Screws	10.2-13.8	90-122
Air Bag Safing Sensor Screws	10.2-13.8	90-122
Primarily Crash Sensor Screws	10.2-13.8	90-122

(Continued)

Torque Specifications

Description	Nm	Lb/In
Tilt Wheel Handle and Shank	3-5	27-44
Driver Air Bag Module Screws	10.2-13.8	90-122
Lower Steering Column Shroud Screws	0.7-1.1	7-9

(Continued)

SPECIFICATIONS (Continued)

Torque Specifications

Description	Nm	Lb/In
Passenger Air Bag Module Screws (Lower)	7-11	62-97
Passenger Air Bag Module Screws (Upper)	1-2	9-17

Official Licensed Product
Ford Motor Company

SECTION 502-02 Frame and Body Mounting

VEHICLE APPLICATION: Mark VIII

SUBJECT **PAGE**

DESCRIPTION AND OPERATION
Frame and Body Mounting 502-02-2
REMOVAL AND INSTALLATION
Body Support — Front Sub-Frame 502-02-7
Body Support — Rear Axle Differential Front Insulators 502-02-2
Body Support — Rear Axle Differential Rear Insulators 502-02-3
Body Support — Rear Sub-Frame 502-02-12
Body Support — Sub-Frame Body Insulators 502-02-5
GENERAL PROCEDURES
Body Misalignment Check 502-02-15
Underbody Misalignment Check 502-02-16
SPECIFICATIONS 502-02-19

Official Licensed Product
Ford Motor Company

DESCRIPTION AND OPERATION

Frame and Body Mounting

Sub-Frame

The front sub-frame (5C145) is bolted to the body and is used to:

- aid in structural support.
- provide the mounting surfaces for the front suspension lower arm struts (3468), the front stabilizer bar (5482) and the front engine support bracket (6028) and front engine support insulator (6038).

The rear sub-frame (5R003) is bolted to the body and is used to:

- aid in structural support.
- provide the mounting surfaces for the rear axle assembly (4200) and the rear suspension arm and bushings (5500).

Engine and Transmission Mounting

The front engine support bracket and front engine support insulator :

- are located on each side of the cylinder block (6010).
- attach the engine to the front sub-frame.

The transmission support insulators (6068) :

- are located at the rear of the transmission.
- attaches the transmission to the transmission support crossmember (6A023).

Underbody

Underbody misalignment can affect both the front and the rear wheel alignment, the operation of the suspension parts and the drivetrain operation.

Official Licensed Product
Ford Motor Company

REMOVAL AND INSTALLATION

Body Support — Rear Axle Differential Front Insulators

Removal

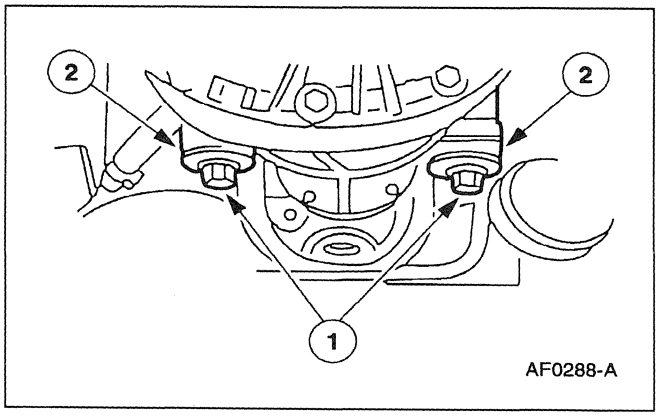

1. Raise and support the vehicle; refer to Section 100-02.
2. Support the front of the rear axle with a jackstand.
3. Remove the rear axle differential front lower insulator (4B431) and the rear axle differential front upper insulator (4B424).
   1 Remove the nuts.
   2 Remove the lower and the upper insulators.

REMOVAL AND INSTALLATION (Continued)

Installation

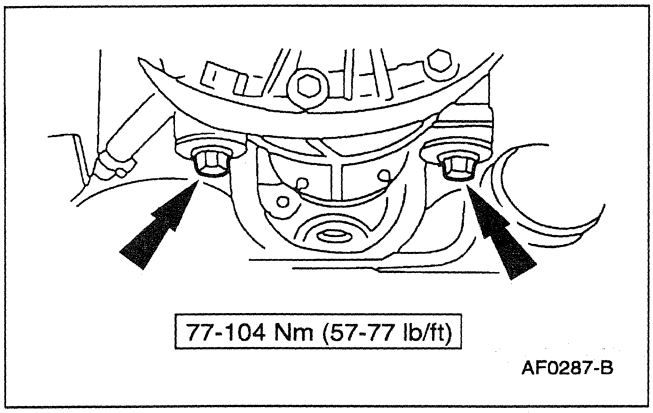

1. Follow the removal procedure in reverse order.

Body Support — Rear Axle Differential Rear Insulators

Removal

Official Licensed Product
Ford Motor Company

1. Raise and support the vehicle; refer to Section 100-02.
2. Support the rear axle with a jackstand.
3. Remove the nuts and remove the damper.

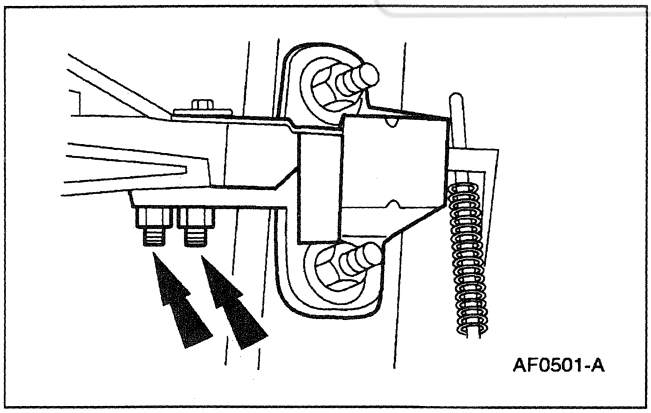

REMOVAL AND INSTALLATION (Continued)

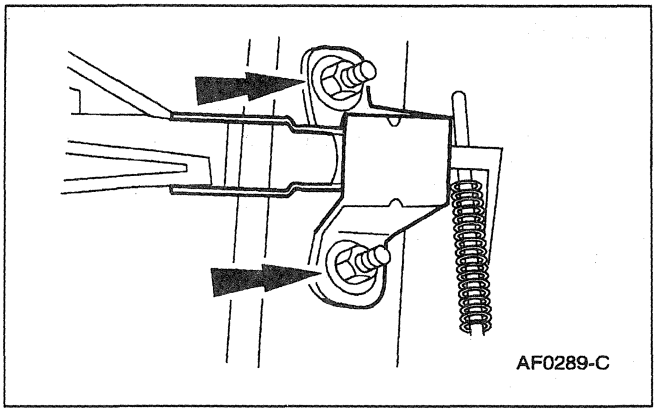

4. Remove the nuts and remove the rear axle differential rear insulator (4B425).

Installation

1. Follow the removal procedure in reverse order.

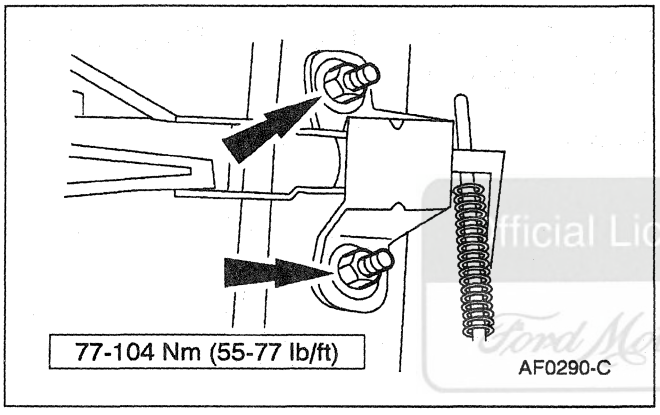

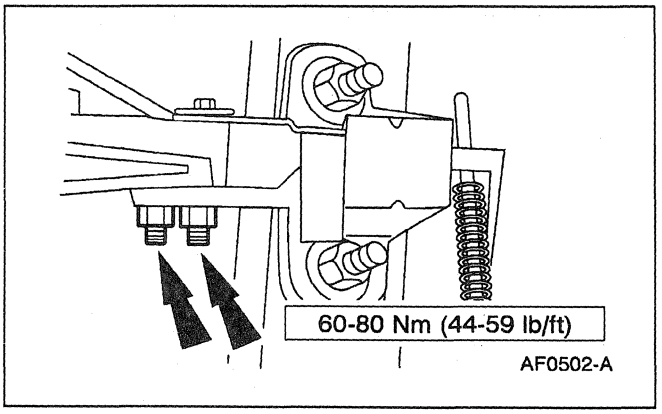

Official Licensed Product
Ford Motor Company

REMOVAL AND INSTALLATION (Continued)

Special Tool(s)

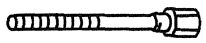 ST1117-A	Draw Bolt 204-044 (T79P-5638-AR1)
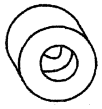 ST1707-A	Remover Adapter 204-095 (T85M-5638-B2)

(Continued)

Body Support — Sub-Frame Body Insulators

Special Tool(s)

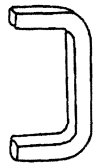 ST1706-A	Remover Bridge 204-094 (T85M-5638-B1)
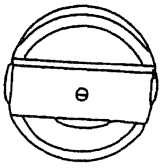 ST1708-A	Replacer Bridge 204-096 (T85M-5638-B3)

Removal

Official Licensed Product
Ford Motor Company

1. Raise and support the vehicle; refer to Section 100-02.
2. Position the adjustable floor stands under the rear suspension arm and bushing (5500).
3. Deflate the rear springs; refer to Section 204-05.
4. Remove the bolts from the rear sub-frame stabilizer bracket.

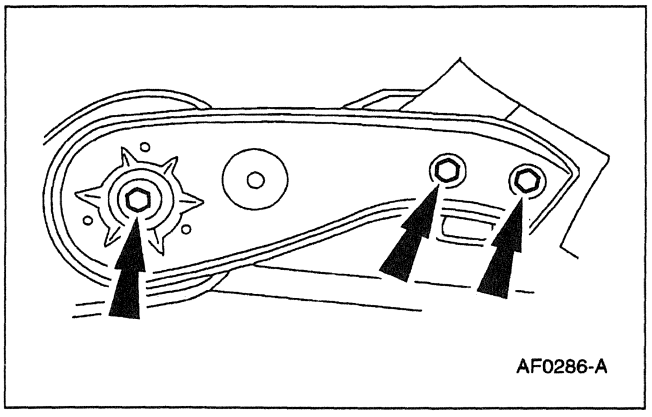
AF0286-A

5. Carefully lower the rear sub-frame to provide clearance for the insulator tools.

REMOVAL AND INSTALLATION (Continued)

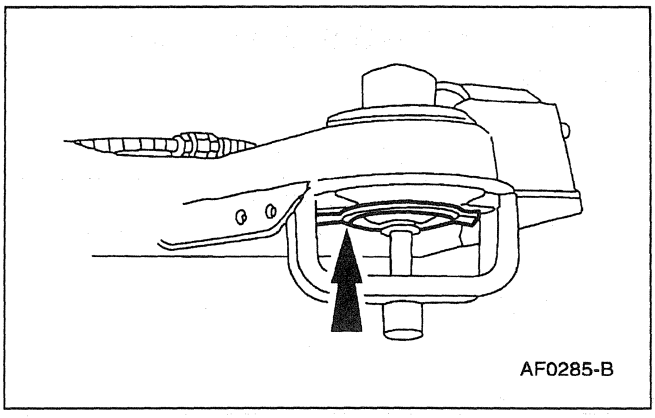

6. Remove the rear frame body insulator (5D006) using the Remover Bridge, the Remover Adapter and the Draw Bolt.

Installation

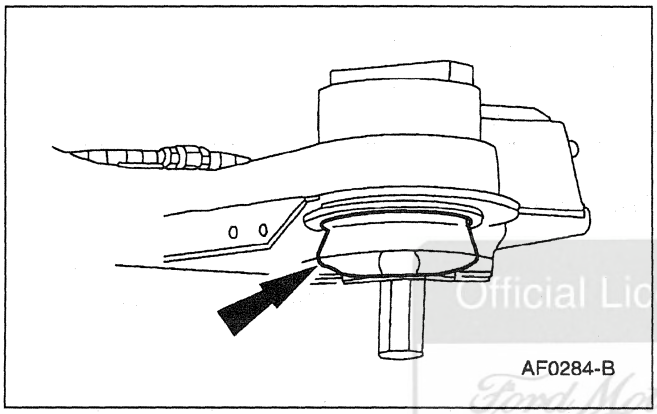

1. Install the rear frame body insulator using the replacer bridge and draw bolt.

Official Licensed Product
Ford Motor Company

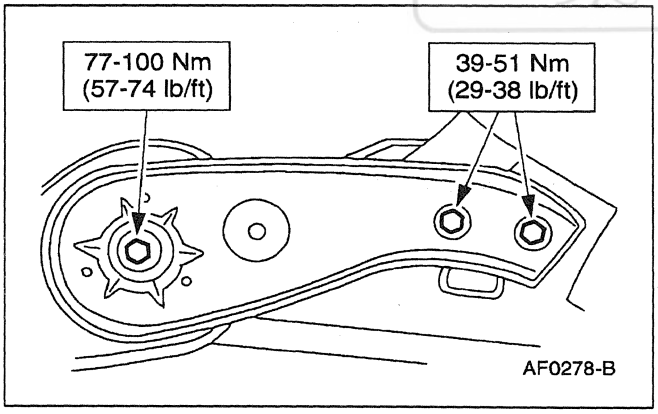

2. Follow the removal procedure in reverse order.

REMOVAL AND INSTALLATION (Continued)

Body Support — Front Sub-Frame

Special Tool(s)

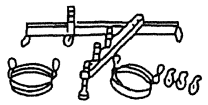 ST1703-A	Three-Bar Engine Support 303-D063 (D88L-6000-A) or equivalent
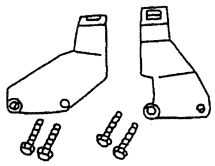 ST1701-A	Engine Lifting Set 303-DS086 (014-00340) or equivalent

Removal

1. Disconnect the battery ground cable (14301).

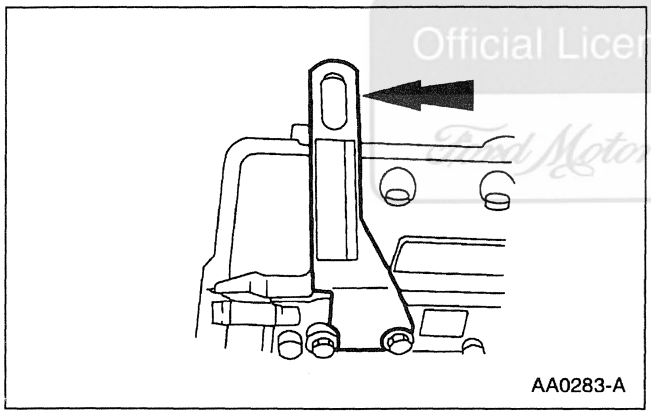
AA0283-A

2. NOTE: The left side is shown, the right side is similar.
   Install the Engine Lifting Set on the engine.

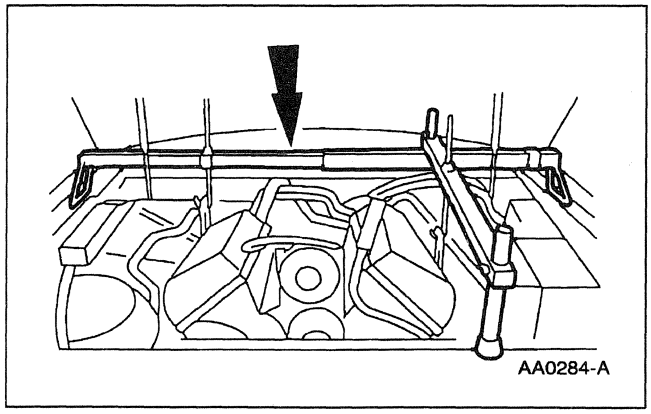
AA0284-A

3. Install the Three Bar Engine Support to the Engine Lifting Set.

4. Raise and support the vehicle; refer to Section 100-02.

Official Licensed Product Ford Motor Company

REMOVAL AND INSTALLATION (Continued)

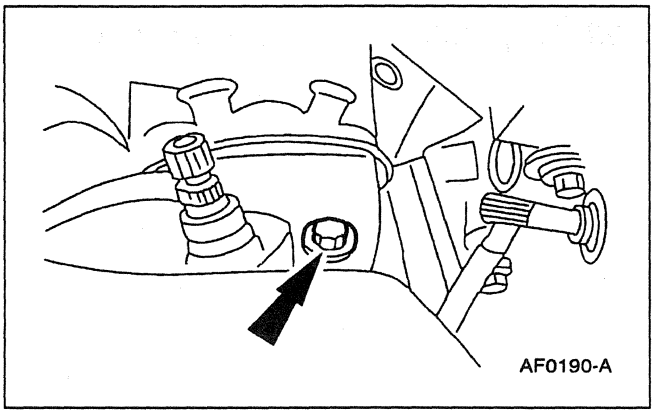

5. Remove the bolts.

6. ⚠ **CAUTION: Raise the engine carefully so as not to damage the lines and the hoses at the rear of the engine.**

   Raise and support the engine with the Three Bar Engine Support.

7. Remove the front tires and the front wheels.

8. Remove the tie rod end from the front wheel spindles; refer to Section 204-01.

9. Remove the front suspension lower arm from the front wheel spindles; refer to Section 204-01.

10. Remove the stabilizer bar link from the front stabilizer bar; refer to Section 204-01.

11. Disconnect the front air spring and shock from the front suspension lower arm strut; refer to Section 204-01.

12. Remove the front fender splash shield.

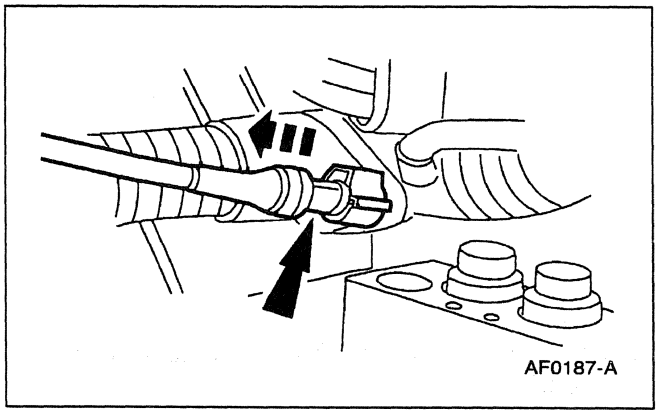

13. Disconnect the anti-lock brake sensor.

Official Licensed Product
Ford Motor Company

REMOVAL AND INSTALLATION (Continued)

14. Drain the power steering fluid; refer to Section 211-02.

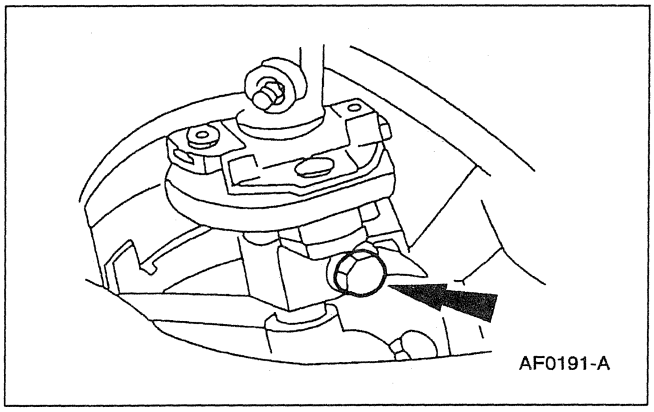

15. Disconnect the steering coupling at the pinch bolt joint.

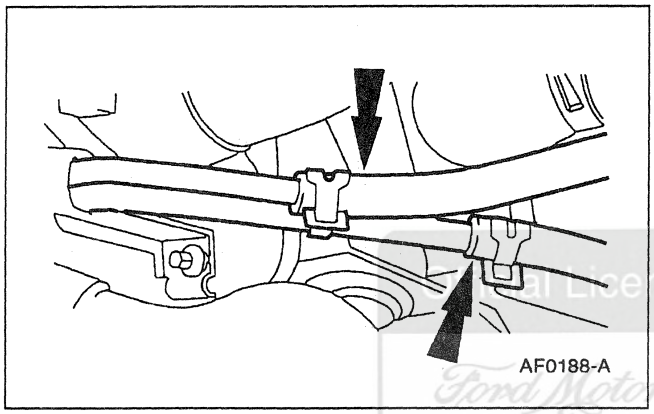

16. Disconnect the power steering pressure and return hoses.

Ford Motor Company

17. Remove the wire harnesses and/or the wire harness clips from the front sub-frame.

18. Support the front sub-frame with adjustable jacks at four points.

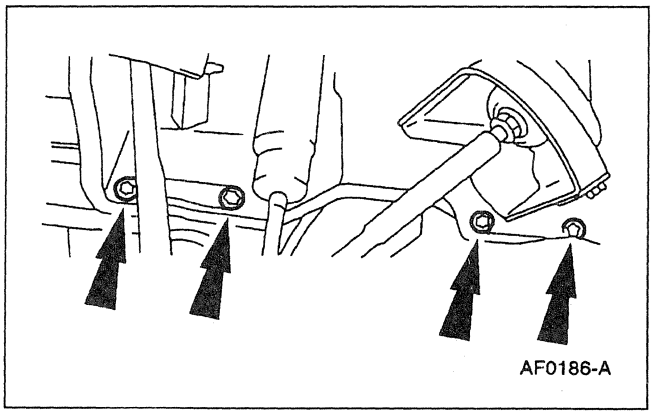

19. Remove the eight front sub-frame-to-body retaining bolts.

20. Lower the adjustable jacks and allow the front sub-frame to lower.

REMOVAL AND INSTALLATION (Continued)

Installation

1. Position the front sub-frame to the body and hand-start the bolts into the nuts.

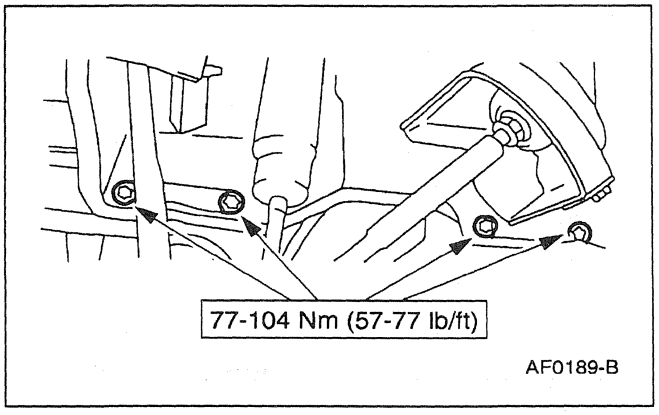

2. Tighten the bolts.

3. Install the wire harness clips and harnesses to the front sub-frame.

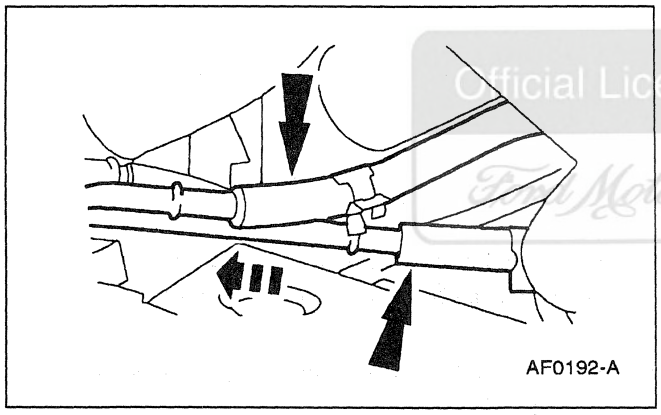

Official Licensed Product
Ford Motor Company

4. Connect the power steering pressure and return hoses.

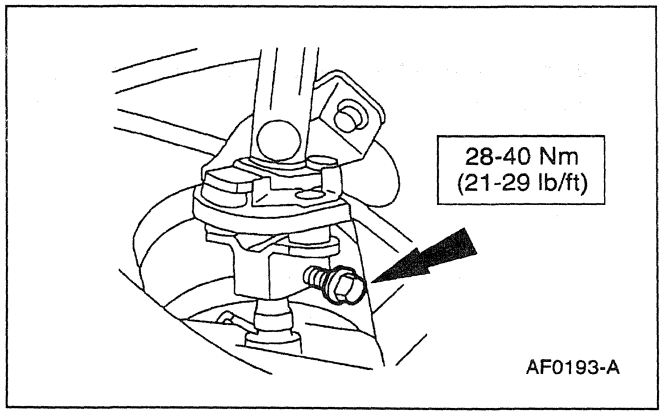

5. Install the bolt.

REMOVAL AND INSTALLATION (Continued)

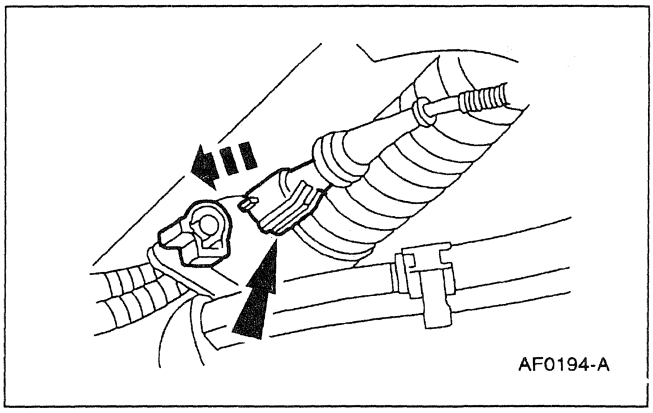

6. Connect the anti-lock brake sensor.

7. Connect the front air spring and shock to the front suspension lower arm strut; refer to Section 204-01.

8. Install the stabilizer bar link to the front stabilizer bar; refer to Section 204-01.

9. Install the front suspension lower arm to the front wheel spindles; Section 204-01.

Official Licensed Product
Ford Motor Company

10. Install the tie rod end to the front wheel spindles; refer to Section 204-01.

11. Install the front fender splash shield.

12. Install the front tires and the front wheels.

13. Lower the vehicle on the hoist part way.

14. **NOTE:** The LH front engine support insulator (with the locating pin) must seat first.

    Lower the engine onto the front engine support insulators.

15. Raise and support the vehicle; refer to Section 100-02.

REMOVAL AND INSTALLATION (Continued)

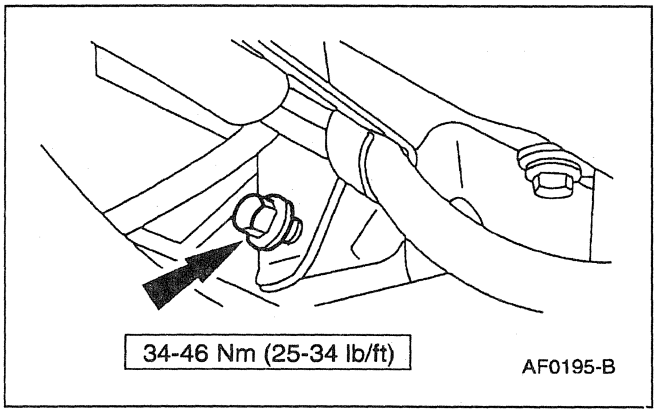

16. Install and tighten the bolts.

17. Lower the vehicle.

18. Remove the Three Bar Engine Support.

19. Remove the Engine Lifting Set.

20. Connect the battery ground cable.

21. Fill the power steering system; refer to Section 211-02.

22. Check the front end alignment; refer to Section 204-00.

Official Licensed Product
Ford Motor Company

Body Support — Rear Sub-Frame

Removal

1. Raise and support the vehicle; refer to Section 100-02.

2. Remove the muffler; refer to Section 309-00.

3. Deflate the rear spring; refer to Section 204-05.

4. Remove the rear axle assembly; refer to Section 205-02.

5. Position the jackstands under the front bumper to prevent the rear of the vehicle from lifting off the hoist.

REMOVAL AND INSTALLATION (Continued)

6. Position the jackstands under the lower LH and RH rear suspension arm and bushing (5500).

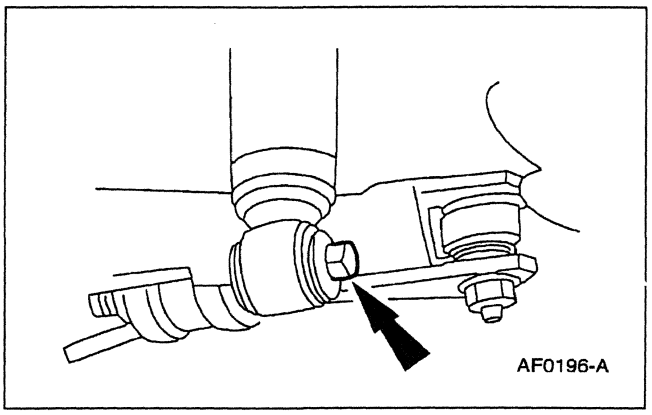

7. Remove the lower rear shock absorber retaining bolts.

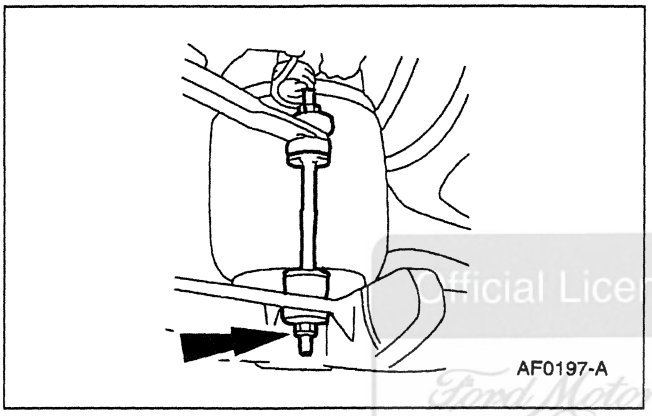

8. Remove the lower retaining bolts from the rear stabilizer bar link and bushing.

Official Licensed Product
Ford Motor Company

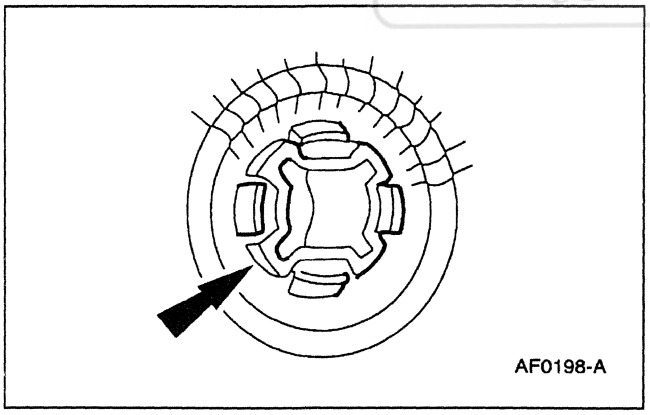

9. Lower the jackstands and remove the bottom side of the rear springs.

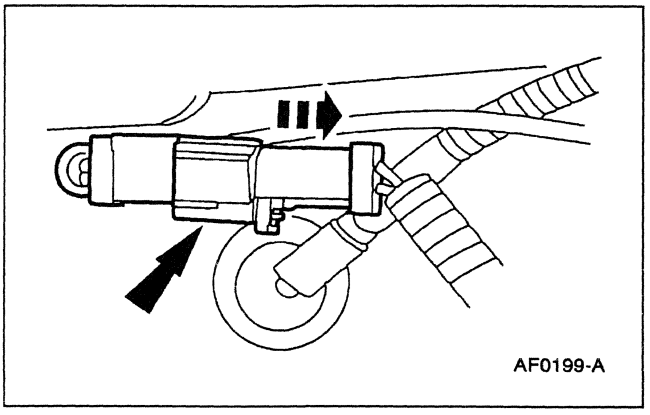

10. Disconnect the lever sensor connector.

REMOVAL AND INSTALLATION (Continued)

11. Position a suitable jack under the rear sub-frame.

12. Remove the six bolts from the rear sub-frame stabilizer bracket and the two bolts from the rear sub-frame body insulator retainer. Remove the rear sub-frame (5R003).

Installation

1. Follow the removal procedure in reverse order.

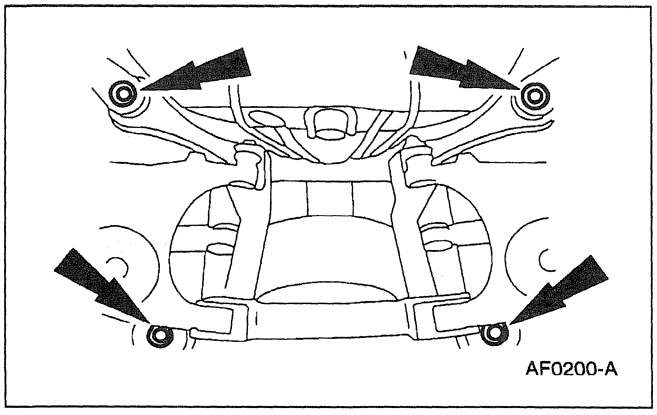

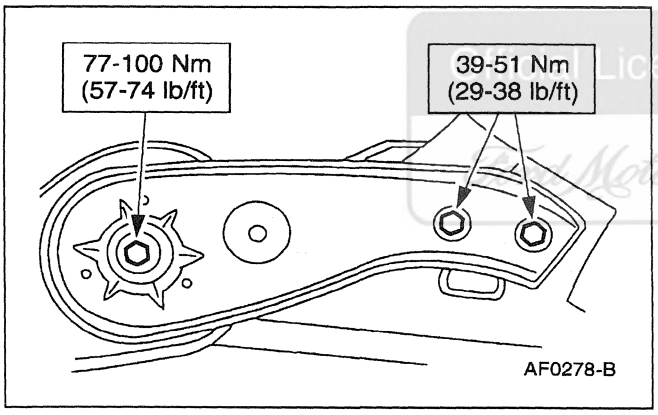

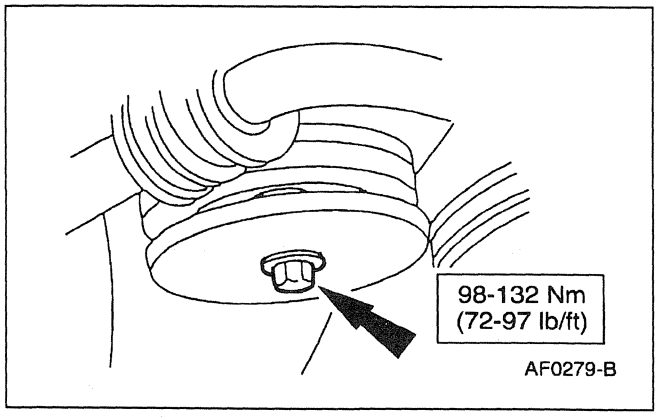

Licensed Product
Ford Motor Company

REMOVAL AND INSTALLATION (Continued)

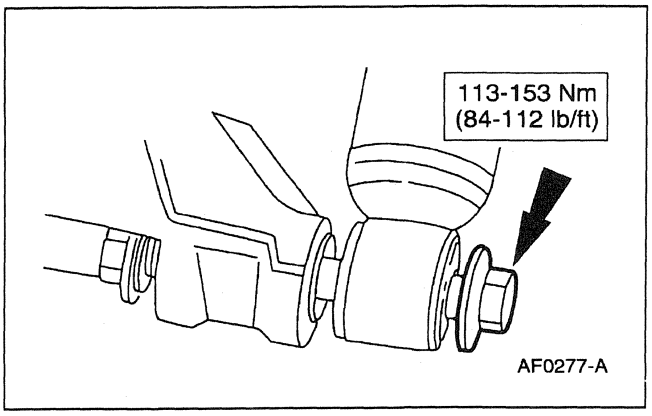

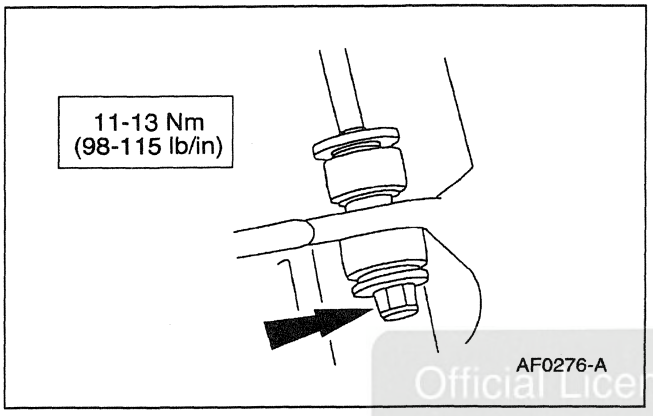

Official Licensed Product
Ford Motor Company

GENERAL PROCEDURES

Body Misalignment Check

⚠ CAUTION: Never apply heat to the bumper energy absorber. Heat could cause the material inside the absorbers to expand and flow out of the absorbers or crack the metal housing. Always remove the absorbers before performing body frame repairs near them. Never use a bumper energy absorber for pulling.

⚠ CAUTION: Do not attempt to correct any serious misalignment with one pulling/pushing operation. Damage to the structure could occur.

⚠ CAUTION: In case of severe or sharp bends, it may be necessary to use heat. Any attempt to cold-straighten a severely bent bracket may cause ruptures of the welds. It may also cause cracks in the bent part. Never heat the area to more than 650°C (1200°F). Always use temperature-indicating crayons when applying heat to any part.

NOTE: All measurements should be made from the bare metal, remove the necessary trim and bumper covers as required.

GENERAL PROCEDURES (Continued)

1. Repair the badly damaged areas before taking measurements for underbody alignment.

2. To check the underbody alignment, take the measurements between opposite reference points such as crease lines or weld joints.

3. Monitor the upper body structure for excessive stress or movement while making any corrections to the underbody structure. Remove all necessary glass to prevent breakage; refer to Section 501-11.

Underbody Misalignment Check

1. The dimensions of the underbody must be restored to provide the correct front and rear wheel alignment geometry.

2. All the dimensions are measured between the centers of the existing holes in the underbody unless otherwise specified.

3. Inspect all underbody structural members for cracks, twists or bends. Check all welded connections for cracks. Inspect the support brackets for looseness. Perform any necessary repairs or make replacements as required.

Official Licensed Product
Ford Motor Company

GENERAL PROCEDURES (Continued)

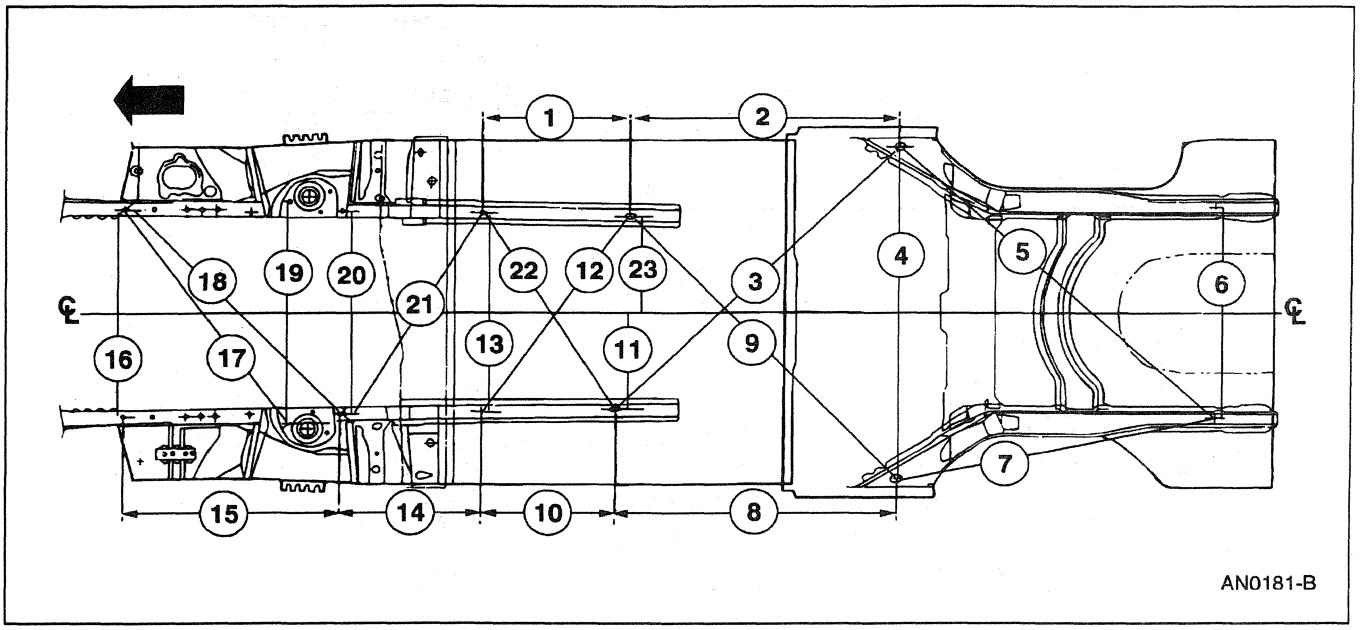

4. Underbody dimension tolerances are ± 3mm (0.11 inch).

Official Licensed Product
Ford Motor Company

Underbody Dimensions

Item	Part Number	Description
1	—	560.07 mm (22.05 inch)
2	—	1014.47 mm (39.94 inch)
3	—	1506.98 mm (59.33 inch)
4	—	1351.78 mm (53.22 inch)
5	—	1673.60 mm (65.89 inch)
6	—	861.31 mm (33.91 inch)
7	—	1279.14 mm (50.36 inch)
8	—	1064.51 mm (41.91 inch)
9	—	1472.18 mm (57.96 inch)
10	—	508.50 mm (20.02 inch)
11	—	390.90 mm (15.39 inch)
12	—	973.32 mm (38.32 inch)
13	—	810.00 mm (31.89 inch)
14	—	592.58 mm (23.33 inch)
15	—	825.50 mm (32.50 inch)
16	—	844.04 mm (33.23 inch)
17	—	1136.39 mm (44.74 inch)
18	—	1173.48 mm (46.20 inch)
19	—	909.57 mm (35.81 inch)
20	—	824.48 mm (32.46 inch)
21	—	1009.14 mm (39.73 inch)
22	—	945.38 mm (37.22 inch)

(Continued)

GENERAL PROCEDURES (Continued)

Underbody Dimensions

Item	Part Number	Description
23	—	390.90 mm (15.39 inch)

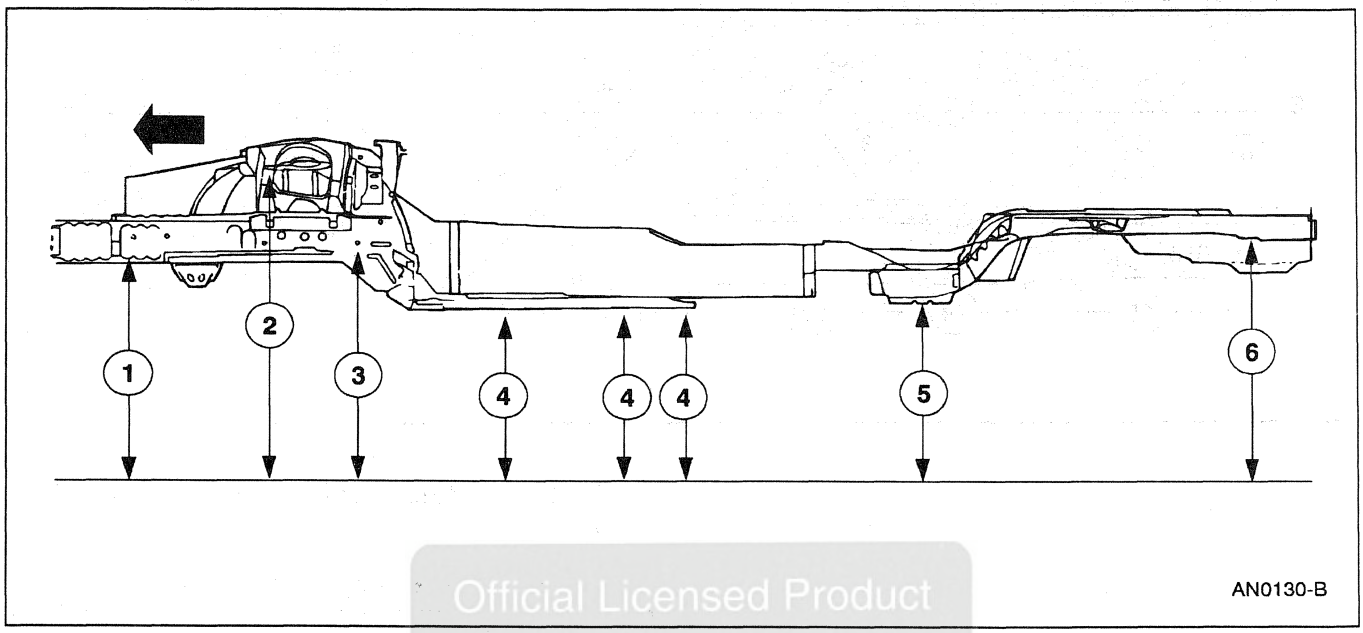

Official Licensed Product
Ford Motor Company

5. Underbody dimension tolerances are ± 3 mm (0.11 inch).

Side View of Underbody Dimensions

Item	Part Number	Description
1	—	322.07 mm (12.68 inch)
2	—	678.43 mm (26.71 inch)
3	—	322.07 mm (12.68 inch)
4	—	106.42 mm (4.19 inch)
5	—	137.92 mm (5.43 inch)
6	—	357.88 mm (14.09 inch)

SPECIFICATIONS

Torque Specifications

Description	Nm	Lb/Ft	Lb/In
Front Engine Support Insulator Through Bolts	34-46	25-34	—
Steering Coupling Pinch Bolt	28-40	21-29	—
Rear Sub-Frame Stabilizer Bracket Retaining Bolts	39-51	29-38	—
Rear Sub-Frame Body Insulator Retaining Bolt	77-100	57-74	—
Rear Frame Body Insulator To Rear Sub-Frame Retaining Bolt	98-132	72-97	—

(Continued)

Torque Specifications

Description	Nm	Lb/Ft	Lb/In
Shock Absorber Retaining Bolt	113-153	84-112	—
Rear Stabilizer Bar Link Retaining Bolt	11-13	—	98-115
Rear Axle Differential Insulator-To-Rear Sub-Frame Bolts	77-104	57-77	—
Front Sub-Frame-To-Body Retaining Bolts	77-104	57-77	—
Rear Axle Damper Retaining Nut	60-80	45-59	—

Official Licensed Product
Ford Motor Company

METRICS

BOLT STRENGTH IDENTIFICATION

ENGLISH SYSTEM

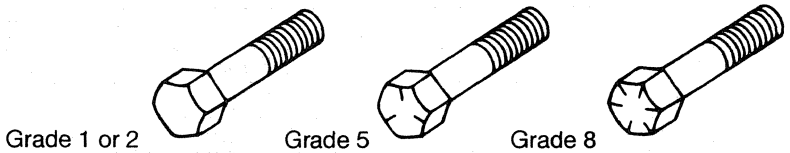

Grade 1 or 2 Grade 5 Grade 8

English bolts: Identification marks on the bolt head represent Rockwell hardness. Generally, the bolt's grade is equal to the number of marks plus two. The higher the grade, the stronger the bolt.

METRIC SYSTEM

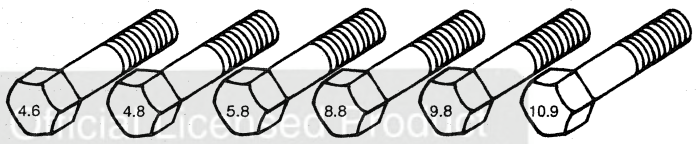

Official Licensed Product
Ford Motor Company

Metric bolts: Identification class numbers on bolt heads represent tensile strength. Higher numbers indicate stronger bolts. Common metric fastener bolt strength properties are 9.8 and 10.9.

HEX NUT STRENGTH IDENTIFICATION

ENGLISH SYSTEM

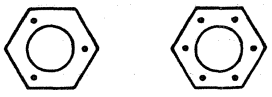

Grade 5 Grade 8

Identification dots represent Rockwell hardness. The nut's grade is equal to the number of dots plus two. The higher the grade, the stronger the nut.

METRIC SYSTEM

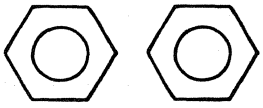

Identification class numbers on nuts represent tensile strength. Higher numbers indicate stronger nuts. Nuts may also have blue finish or paint daub on hex flat.

OTHER TYPES OF PARTS

Metric identification schemes vary by type of part, most often a variation of that used for bolts and nuts. Note that many types of English and Metric fasteners carry no special identification if they are otherwise unique.

–Stamped U-Nuts

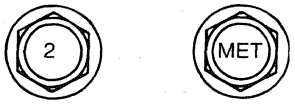

–Tapping, thread forming and certain other case hardened screws.

CLASS 10.9 CLASS 9.8 CLASS 8.8

–Studs, Large studs may carry the property class number. Smaller studs use a geometric code on the end.

METRICS

ENGLISH/METRIC CONVERSION

DESCRIPTION	MULTIPLY	BY	FOR METRIC EQUIVALENT
Acceleration	ft/s^2	0.3048	m/s^2
	in/s^2	0.0254	m/s^2
Torque	lb-in	0.11298	N·m
	lb-ft	1.3558	N·m
Power	horsepower	0.746	kW
Pressure or Stress	inches of water	0.2491	kPa
	psi	6.895	kPa
	psi	0.069	bar
Energy or Work	BTU	1055.0	Joules(J)
	lb-ft	1.3558	Joules(J)
	kiloWatt-hour	3,600,000 or 3.6×10^6	Joules(J)
Light	foot candle	10.764	lumens/square meter (lm/m^2)
Fuel Performance	miles/gal	0.4251	kilometers/liter (km/L)
	gal/mile	2.3527	liters/kilometer (L/km)
Velocity	mph	1.6093	kilometers/hour (km/h)
Length	inch	25.4	mm
	foot	0.3048	m
	yard	0.9144	m
	mile	1.609	km
Area	square inch (in^2)	645.2	mm^2
		6.45	cm^2
	square ft (ft^2)	0.0929	m^2
	square yard	0.8361	m^2
Volume	cubic inch (in^3)	16387.0	mm^3
		16.387	cm^3
		0.0164	liters (L)
	quart	0.9464	liters (L)
	gallon	3.7854	liters(L)
	cubic yard	0.7646	m^3
Mass	pound	0.4536	kg
	ton	907.18	kg
	ton	0.9078	tonne (t)
Force	kilogram	9.807	N
	ounce	0.2780	N
	pound	4.448	N
Temperature	degree Farenheit (°F)	(°F-32) 0.556	degree Celsius (°C)

Official Licensed Product
Ford Motor Company

Alphabetical Index

A

Air Conditioning 412-03-1
A/C Cycling Switch 412-03-27
A/C System 412-03-2
Air Conditioning 412-03-9
Clutch and Clutch Field Coil 412-03-13
Compressor 412-03-9
Condenser Core 412-03-29
Description and Operation 412-03-2
Diagnosis and Testing 412-03-9
Evaporator Core Orifice 412-03-22
Evaporator Core 412-03-21
Line — Compresssor to Condenser Discharge 412-03-37
Line — Condenser to Evaporator 412-03-33
Line — Evaporator to Compressor Suction 412-03-35
Manifold and Tube Assembly 412-03-32
Pressure Relief Valve 412-03-29
Pressure Transducer 412-03-28
Removal and Installation 412-03-9
Specifications 412-03-39
Shaft Seal 412-03-17
Suction Accumulator/Drier 412-03-24

Air Distribution and Filtering 412-01-1
Air Distribution 412-01-2
412-01-4
Description and Operation 412-01-2
Diagnosis and Testing 412-01-4
Disassembly and Assembly 412-01-8
Duct — Heater Outlet Floor 412-01-8
Duct — LH A/C Evaporator Register 412-01-6
Duct — Rear Seat Airflow 412-01-7
Instrument Panel Air Distribution Ducts 412-01-8
Removal and Installation 412-01-5
Register — Center 412-01-5
Register — LH 412-01-5
Specifications 412-01-11

Antenna 415-02-1
Antenna — Isolator Module 415-02-3
Antenna 415-02-2
415-02-3
Cable — FM Antenna to Isolator Module 415-02-6

Antenna (Continued)
Cable — Radio Chassis to Isolator Module 415-02-4
Description and Operation 415-02-2
Diagnosis and Testing 415-02-3
Removal and Installation 415-02-3
Specifications 415-02-7

Anti-Theft — PATS 419-01B-1
Antenna — Passive Anti-Theft System (PATS) 419-01B-17
Anti-Theft — PATS 419-01B-3
Anti-Theft — Passive 419-01B-2
Description and Operation 419-01B-2
Diagnosis and Testing 419-01B-3
General Procedures 419-01B-19
Inspection and Verification 419-01B-3
Key Programming — Key Initialization Sequence 419-01B-19
Key Programming — New Key (45 Minute Procedure) 419-01B-22
Key Programming — New Key (Eight Minute Procedure) 419-01B-21
Key Programming — Spare 419-01B-20
Pinpoint Tests 419-01B-8
Removal and Installation 419-01B-17
SCIL Module Active Command Index 419-01B-6
SCIL Module Diagnostic Trouble Code (DTC) Index 419-01B-3
SCIL Module Parameter Identification (PID) Index 419-01B-5
Symptom Chart 419-01B-7

Anti-Theft — Perimeter 419-01A-1
Anti-Theft — Perimeter 419-01A-2
419-01A-4
Anti-Theft Switch — Door Disarm 419-01A-30
Description and Operation 419-01A-2
Diagnosis and Testing 419-01A-4
Disarming a Triggered System 419-01A-3
Disarming an Untriggered System 419-01A-3
Inspection and Verification 419-01A-4
Module — Steering Column Ignition Lighting (SCIL) 419-01A-31
Pinpoint Tests 419-01A-9
Removal and Installation 419-01A-30
SCIL Module Active Command Index 419-01A-7
SCIL Module Diagnostic Trouble Code (DTC) Index 419-01A-4

Ford Motor Company

Alphabetical Index

Anti-Theft — Perimeter (Continued)
SCIL Module Parameter Identification (PID) Index 419-01A-6
Symptom Chart 419-01A-8
System Arming 419-01A-3

Audio Entertainment System — General Information 415-00-1
Audio Entertainment System 415-00-2
Diagnosis and Testing 415-00-2
Error Messages 415-00-3
General Procedures 415-00-50
Inspection and Verification 415-00-2
Pinpoint Tests 415-00-6
Symptom Chart 415-00-4
Tape Player Cleaning 415-00-50

B

Battery, Mounting and Cables 414-01-1
Battery and Cables 414-01-2
Battery 414-01-3
Description and Operation 414-01-2
Diagnosis and Testing 414-01-3
Removal and Installation 414-01-3
Specifications 414-01-6

Body Closures 501-03-1
Body Closures 501-03-2
Description and Operation 501-03-2
Door — Front 501-03-3
Door — Luggage Compartment 501-03-5
General Procedures 501-03-6
Hinge Adjustment 501-03-6
Removal and Installation 501-03-3
Specifications 501-03-9
Striker Adjustment — Front Door 501-03-7
Striker Adjustment — Luggage Compartment 501-03-8
Torsion Bar Loading 501-03-8

Bumpers 501-19-1
Bumper — Front 501-19-3
Bumper — Rear 501-19-9
Bumpers 501-19-2
Description and Operation 501-19-2

Bumpers (Continued)
Removal and Installation 501-19-3
Specifications 501-19-15

C

Cellular Phone 419-08-1
CPM Active Command Index 419-08-7
CPM Diagnostic Trouble Code (DTC) Index 419-08-6
CPM Parameter Identification (PID) Index 419-08-6
Cellular Phone 419-08-2
419-08-5
Description and Operation 419-08-2
Diagnosis and Testing 419-08-5
Inspection and Verification 419-08-5
Other Possible Concerns 419-08-6
Pinpoint Tests 419-08-8
Programming 419-08-3
Removal and Installation 419-08-33
Symptom Chart 419-08-7
System / Carrier Concerns 419-08-6
Transceiver — Portable Support Electronics (PSE) Module 419-08-33

Charging System — General Information 414-00-1
Charging System 414-00-2
414-00-3
Component Tests 414-00-22
Description and Operation 414-00-2
Diagnosis and Testing 414-00-3
Generator On-Vehicle Tests 414-00-23
Inspection and Verification 414-00-3
Pinpoint Tests 414-00-5
Specifications 414-00-24
Symptom Chart 414-00-4

Climate Control System — General Information 412-00-1
A / C Clutch Air Gap Adjustment 412-00-115
Climate Control System 412-00-2
Climate Control 412-00-11
Component Tests 412-00-104
Contaminated Refrigerant Handling 412-00-131
Description and Operation 412-00-2
Diagnosis and Testing 412-00-11

Official Licensed Product

Alphabetical Index

Climate Control System — General Information (Continued)
Discharging and Recovery 412-00-120
Evacuation and Charging 412-00-123
Flushing 412-00-121
General Procedures 412-00-107
Inspection and Assembly Requirements — Following an A/C Compressor Failure ... 412-00-129
Inspection and Verification 412-00-15
Leak Detection — Using Tracer Dye 412-00-118
Leak Detection — Using the Automatic Calibration Halogen Leak Detector 412-00-117
Manifold Gauge Set Connection 412-00-116
Pinpoint Tests 412-00-19
Refrigerant Identification Testing 412-00-130
Refrigerant Oil Addition 412-00-127
Refrigerant System Filtering After A/C Compressor Replacement 412-00-124
Refrigerant System Tests 412-00-112
Specifications 412-00-133
Spring Lock Coupling 412-00-107
Symptom Chart 412-00-17
Vacuum Hose Repair — Mini-Tube 412-00-132

Control Components 412-04-1
Actuator — A/C Electric Blend Door 412-04-10
Blower Motor Speed Control 412-04-11
Control Assembly 412-04-7
Control Components 412-04-2
412-04-7
Description and Operation 412-04-2
Diagnosis and Testing 412-04-7
Removal and Installation 412-04-7
Specifications 412-04-18
Sensor — A/C Sunload 412-04-9
Sensor — In-Car Temperature 412-04-10
Vacuum Control Motor — Air Inlet Duct Door 412-04-16
Vacuum Control Motor — Heater Air Damper Door 412-04-12
Vacuum Control Motor — Windshield Defroster Door 412-04-15
Vacuum Reservoir Tank and Bracket 412-04-17

D

Daytime Running Lamps 417-04-1
Description and Operation 417-04-2
Diagnosis and Testing 417-04-3
Daytime Running Lamps (DRL) Control Module 417-04-17
Daytime Running Lamps (DRL) 417-04-2
417-04-3
Inspection and Verification 417-04-3
Pinpoint Tests 417-04-8
Removal and Installation 417-04-17
SCIL Active Command Index 417-04-6
SCIL Diagnostic Trouble Code (DTC) Index 417-04-4
SCIL Parameter Identification (PID) Index 417-04-5
Specifications 417-04-17
Symptom Chart 417-04-7

Driver Information/Message Center 413-08-1
Description and Operation 413-08-2
Diagnosis and Testing 413-08-5
DSM Active Command Index 413-08-12
DSM Diagnostic Trouble Code (DTC) Index 413-08-10
DSM Parameter Identification (PID) Index 413-08-12
Inspection and Verification 413-08-6
Message Center (MC) Indicator Module Active Command Index 413-08-10
Message Center (MC) Indicator Module Diagnostic Trouble Code (DTC) Index 413-08-9
Message Center (MC) Indicator Module Parameter Identification (PID) Index 413-08-9
Message Center Assembly — Indicator Lamp Module Bulb 413-08-103
Message Center Assembly — Message Center Indicator 413-08-102
Message Center Indicator Module On-Board Diagnostic Test 413-08-7
Message Center Switch Module 413-08-104
Message Center 413-08-2
413-08-5
413-08-13
Pinpoint Tests 413-08-15
Removal and Installation 413-08-102
Specifications 413-08-105

Officially Licensed Product Ford Motor Company

Alphabetical Index

E

Electronic Compass 419-11-1
Calibration Adjustment 419-11-15
Compass Display 419-11-2
Compass Module 419-11-10
Compass Zone Adjustment 419-11-13
Description and Operation 419-11-2
Diagnosis and Testing 419-11-3
Electronic Compass 419-11-3
General Procedures 419-11-11
Inspection and Verification 419-11-3
Pinpoint Tests 419-11-4
Removal and Installation 419-11-10
Symptom Chart 419-11-3
Vehicle Demagnetizing 419-11-11

Exterior Lighting 417-01-1
Backup Lamps 417-01-133
Ballast — Low Beam Headlamp Bulb 417-01-153
Bulb — Headlamp 417-01-140
Description and Operation 417-01-3
Diagnosis and Testing 417-01-5
Exterior Lighting 417-01-3
General Procedures 417-01-155
Headlamp Adjustment — Photocell / Amplifier 417-01-157
Headlamp Adjustment 417-01-155
Headlamps (With Autolamps) 417-01-69
Headlamps 417-01-5
Inspection and Verification 417-01-6
417-01-69
417-01-77
417-01-91
417-01-121
417-01-133
Lamp Assembly — Headlamp 417-01-137
Lamp Assembly — Hi-Mount Lamp 417-01-144
Lamp Assembly — Rear Lamp 417-01-145
Lamp Assembly — Stoplamp 417-01-143
Lamp Switch — Brake Pedal Position 417-01-150
Lamp Switch — Headlamp 417-01-147
Parking, Rear or License Lamps 417-01-120
Photocell / Amplifier 417-01-152

Exterior Lighting (Continued)
Pinpoint Tests 417-01-11
417-01-74
417-01-82
417-01-96
417-01-126
417-01-134
Removal and Installation 417-01-137
SCIL Active Command Index 417-01-9
417-01-72
417-01-80
417-01-94
417-01-124
SCIL Diagnostic Trouble Code (DTC) Index 417-01-6
417-01-70
417-01-78
417-01-91
417-01-122
SCIL Parameter Identification (PID) Index 417-01-8
417-01-72
417-01-80
417-01-93
417-01-123
Specifications 417-01-157
Stoplamps 417-01-77
Symptom Chart 417-01-73
417-01-81
417-01-95
417-01-10
417-01-125
417-01-133
Turn Signal / Cornering / Hazard Lamps 417-01-90

Exterior Trim and Ornamentation 501-08-1
Description and Operation 501-08-2
Exterior Trim and Ornamentation 501-08-2
Moulding — Front Door 501-08-3
Moulding — Roof Side 501-08-4
Removal and Installation 501-08-3
Specifications 501-08-5

F

Frame and Body Mounting 502-02-1
Body Misalignment Check 502-02-16
Body Support — Front Sub-Frame 502-02-7

Official Licensed Product Ford Motor Company

Alphabetical Index

Frame and Body Mounting (Continued)
Body Support — Rear Axle Differential Front Insulators 502-02-2
Body Support — Rear Axle Differential Rear Insulators 502-02-3
Body Support — Rear Sub-Frame 502-02-12
Body Support — Sub-Frame Body Insulators 502-02-5
Description and Operation 502-02-2
Frame and Body Mounting 502-02-2
General Procedures 502-02-16
Removal and Installation 502-02-2
Specifications 502-02-19
Underbody Misalignment Check 502-02-16

Front End Body Panels 501-02-1
Cowl — Vent Screen 501-02-3
Description and Operation 501-02-2
Front End Body Panels 501-02-2
Grille Opening Panel 501-02-4
Removal and Installation 501-02-3
Specifications 501-02-7

G

Gauges and Warning Devices 413-09-1
DDM Active Command Index 413-09-8
DDM Diagnostic Trouble Code (DTC) Index 413-09-7
DDM Parameter Identification (PID) Index 413-09-8
Description and Operation 413-09-2
Diagnosis and Testing 413-09-3
DSM Active Command Index 413-09-11
DSM Diagnostic Trouble Code (DTC) Index 413-09-9
DSM Parameter Identification (PID) Index 413-09-10
Inspection and Verification 413-09-3
Module — Steering Column / Ignition / Lighting (SCIL) 413-09-26
Pinpoint Tests 413-09-12
Removal and Installation 413-09-26
SCIL Module Active Command Index 413-09-6
SCIL Module Diagnostic Trouble Code (DTC) Index 413-09-4
SCIL Module Parameter Identification (PID) Index 413-09-5
Switch — Driver Door Ajar 413-09-26
Switch — Key In Ignition Warning 413-09-26

Gauges and Warning Devices (Continued)
Symptom Chart 413-09-11
Warning Devices 413-09-2
413-09-3

Generator and Regulator 414-02-1
Description and Operation 414-02-2
Diagnosis and Testing 414-02-2
Generator 414-02-2
Removal and Installation 414-02-2
Specifications 414-02-5

Glass, Frames and Mechanisms 501-11-1
Component Tests 501-11-66
Description and Operation 501-11-2
Diagnosis and Testing 501-11-4
Door Glass Run Retainer 501-11-82
Door Glass Top Run 501-11-82
General Procedures 501-11-91
Glass — Windshield 501-11-2
Glass, Frames and Mechanisms 501-11-4
Grid Wire Repair — Back Window Glass 501-11-91
Inspection and Verification 501-11-4
Pinpoint Tests 501-11-10
Removal and Installation 501-11-67
Specifications 501-11-93
Switch — Heated Back Window 501-11-67
Switch — Window Regulator Control 501-11-68
Symptom Chart 501-11-9
Window Glass — Back 501-11-71
Window Glass — Door 501-11-68
Window Glass — Rear Quarter 501-11-70
Window Regulator — Power 501-11-77
Windshield Glass 501-11-84

H

Handles, Locks, Latches and Mechanisms 501-14A-1
Description and Operation 501-14A-2
Diagnosis and Testing 501-14A-3
Handle — Outside Door 501-14A-39
Handles, Locks, Latches and Mechanisms 501-14A-2
Inspection and Verification 501-14A-3
Latch — Door 501-14A-36

Ford Motor Company

Alphabetical Index

Handles, Locks, Latches and Mechanisms (Continued)
Latch — Luggage Compartment Door 501-14A-38
Latch Remote Control — Fuel Filler Door ... 501-14A-43
Lock Cylinder — Door 501-14A-41
Lock Cylinder — Luggage Compartment Door 501-14A-42
Locks, Latches and Mechanisms 501-14A-3
Pinpoint Tests 501-14A-9
Removal and Installation 501-14A-36
Specifications 501-14A-44
Symptom Chart 501-14A-8

Heating/Defrosting 412-02-1
Blower Motor 412-02-4
Description and Operation 412-02-2
Diagnosis and Testing 412-02-3
Disassembly and Assembly 412-02-10
Evaporator Core Housing 412-02-5
412-02-10
Heater Core 412-02-9
Heater Hose 412-02-3
Heating and Defrosting 412-02-2
412-02-3
Removal and Installation 412-02-3
Specifications 412-02-14

Horn 413-06-1
Description and Operation 413-06-2
Diagnosis and Testing 413-06-3
Horn 413-06-2
413-06-3
413-06-15
Inspection and Verification 413-06-3
Pinpoint Tests 413-06-4
Removal and Installation 413-06-15
Specifications 413-06-17
Switch — Horn Blow 413-06-16
Symptom Chart 413-06-3

I

Instrument Cluster 413-01-1
Cluster Lens 413-01-75
Description and Operation 413-01-2
Diagnosis and Testing 413-01-3

Instrument Cluster (Continued)
HEC Active Command Index 413-01-8
HEC Diagnostic Trouble Code (DTC) Index 413-01-7
HEC Parameter Identification (PID) Index 413-01-8
Indicator/Warning Bulb 413-01-74
Inspection and Verification 413-01-3
Instrument Cluster 413-01-2
413-01-3
413-01-72
Pinpoint Tests 413-01-9
Removal and Installation 413-01-72
SCIL Active Command Index 413-01-6
SCIL Diagnostic Trouble Code (DTC) Index 413-01-4
SCIL Parameter Identification (PID) Index 413-01-5
Specifications 413-01-76
Symptom Chart 413-01-8

Instrument Cluster and Panel Lighting — General Information 413-00-1
Description and Operation 413-00-2
Diagnosis and Testing 413-00-2
Dimmer Switch — Panel 413-00-17
Illumination Bulb — Climate Control Assembly 413-00-16
Illumination Bulb — Instrument Cluster 413-00-16
Inspection and Verification 413-00-2
Instrument Cluster and Panel Lighting 413-00-2
Pinpoint Tests 413-00-8
Removal and Installation 413-00-16
SCIL Active Command Index 413-00-5
SCIL Diagnostic Trouble Code (DTC) Index 413-00-3
SCIL Parameter Identification (PID) Index 413-00-5
Symptom Chart 413-00-6

Instrument Panel and Console 501-12-1
Console — Floor 501-12-6
501-12-29
Description and Operation 501-12-2
Glove Compartment 501-12-31
Instrument Panel — Center Finish Panel 501-12-7
Instrument Panel — Cluster Finish Panel 501-12-9
Instrument Panel 501-12-2
501-12-12
Removal and Installation 501-12-7
Specifications 501-12-33

Interior Lighting 417-02-1
DDM Active Command Index 417-02-9

Officially Licensed Product

Alphabetical Index

Interior Lighting (Continued)
DDM Diagnostic Trouble Code (DTC) Index 417-02-8
DDM Parameter Identification (PID) Index 417-02-9
Description and Operation 417-02-2
Diagnosis and Testing 417-02-3
Inspection and Verification 417-02-4
Interior Lighting System 417-02-2
417-02-3
Lamp Assembly — Courtesy (Door) 417-02-51
Lamp Assembly — Dome/Map Combination 417-02-49
Lamp Assembly — Outside Rear View Mirror Ground Illumination 417-02-52
Pinpoint Tests 417-02-11
Removal and Installation 417-02-49
Specifications 417-02-54
Symptom Chart 417-02-10

Interior Trim and Ornamentation 501-05-1
Description and Operation 501-05-2
Headliner 501-05-10
Interior Trim 501-05-2
Removal and Installation 501-05-3
Specifications 501-05-12
Trim Panel — Door 501-05-3
Trim Panel — Quarter 501-05-6

K

Keyless Entry/Computer Operated Locks 501-14B-1
DDM Active Command Index 501-14B-6
DDM Diagnostic Trouble Code (DTC) Index 501-14B-4
DDM Parameter Identification (PID) Index 501-14B-5
Description and Operation 501-14B-2
Diagnosis and Testing 501-14B-3
Electronic Door Lock Control System 501-14B-2
501-14B-3
General Procedures 501-14B-40
Inspection and Verification 501-14B-4
Keypad 501-14B-39
Module — Driver Door 501-14B-39
Pinpoint Tests 501-14B-11
Programming — Keyless Entry Keypad 501-14B-40
Programming — Keyless Entry Remote Transmitter 501-14B-41

Keyless Entry/Computer Operated Locks (Continued)
Removal and Installation 501-14B-39
Specifications 501-14B-42
Symptom Chart 501-14B-10

M

Module Communications Network 418-00-1
Communication Circuit Wiring Repair 418-00-71
Communication Network 418-00-2
418-00-5
Description and Operation 418-00-2
Diagnosis and Testing 418-00-5
General Procedures 418-00-71
ISO 9141 Communication Network 418-00-4
Inspection and Verification 418-00-5
Pinpoint Tests 418-00-8
SCP Communication Network 418-00-3
Specifications 418-00-73
Symptom Chart 418-00-6
System Precheck 418-00-6

Multi-Function Electronic Control Modules 419-10-1
Description and Operation 419-10-2
Diagnosis and Testing 419-10-3
Module — Control, Air Suspension 419-10-3
Module — Driver Door (DDM) 419-10-6
Module — Driver Seat (DSM) 419-10-7
Module — Steering Column/Ignition/Lighting (SCIL) 419-10-8
Module Controlled Functions 419-10-2
Multi-Function Electronic Module 419-10-3
Removal and Installation 419-10-3
Specifications 419-10-10

O

Occupant Restraints — Active 501-20A-1
Component Test 501-20A-5
Description and Operation 501-20A-2
Diagnosis and Testing 501-20A-4

Official Published Product
Ford Motor Company

Alphabetical Index

Occupant Restraints — Active (Continued)
General Procedures 501-20A-10
Inspection and Verification 501-20A-4
Occupant Restraint System 501-20A-2
501-20A-4
Removal and Installation 501-20A-6
Retractor — Front and Rear 501-20A-6
Specifications 501-20A-12
Safety Belt Buckle — Front Seat 501-20A-7
Safety Belt Buckle — Rear Seat 501-20A-9
Safety Belt Tongue Rotated on Belt 501-20A-11
Safety Belt with Anchor Plate Thread Damage 501-20A-10
Symptom Chart 501-20A-5

Occupant Restraints — Passive — Supplemental Air Bag System 501-20B-1
Air Bag Diagnostic Monitor 501-20B-6
Air Bag Disposal 501-20B-92
Air Bag Module — Driver 501-20B-5
Air Bag Module — Passenger 501-20B-6
Air Bag Sliding Contact 501-20B-5
501-20B-88
Air Bag Supplemental Restraint System (SRS) 501-20B-3
501-20B-8
Air Bag System Reconnect Checklist 501-20B-10
Description and Operation 501-20B-3
Diagnosis and Testing 501-20B-8
Deactivation Procedure 501-20B-8
Diagnosing Customer Concerns With Hard Diagnostic Trouble Codes (DTCs) 501-20B-8
Diagnosing Customer Concerns Without Hard Diagnostic Trouble Codes 501-20B-8
Diagnostic Instructions — Air Bag Supplemental Restraint System (SRS) ... 501-20B-10
Diagnostic Monitor — Air Bag 501-20B-80
Electrical System 501-20B-7
General Procedures 501-20B-92
Glossary 501-20B-9
Inspection and Verification 501-20B-11
LFC 51 — Air Bag Diagnostic Monitor Internal Thermal Fuse — Fuse Open Due to Intermittent Short to Ground 501-20B-67
Module — Driver Air Bag 501-20B-81
Module — Passenger Air Bag 501-20B-85

Occupant Restraints — Passive — Supplemental Air Bag System (Continued)
Pinpoint Test B: Continuous Air Bag Indicator — Air Bag Diagnostic Monitor Disconnected or Inoperative 501-20B-14
Pinpoint Test C: LFC 12 — Low Battery Voltage 501-20B-16
Pinpoint Test D: LFC 13 — Air Bag Circuit Short to Ground 501-20B-20
Pinpoint Test E: LFC 14 — Primary Crash Sensor Circuit Short to Ground 501-20B-26
Pinpoint Test F: LFC 21 — Safing Sensor Not Mounted to Vehicle Properly 501-20B-28
Pinpoint Test G: LFC 22 — Safing Sensor Output Circuit Short to Battery 501-20B-32
Pinpoint Test H: LFC 23 — Safing Sensor Input Feed / Return Circuit Open 501-20B-37
Pinpoint Test I: LFC 24 — Safing Sensor Output Feed / Return Circuit Open 501-20B-39
Pinpoint Test J: LFC 32 — Driver Air Bag Circuit High Resistance or Open 501-20B-43
Pinpoint Test K: LFC 33 — Passenger Air Bag Circuit High Resistance or Open 501-20B-47
Pinpoint Test L: LFC 34 — Driver Air Bag Circuit Low Resistance or Short 501-20B-50
Pinpoint Test M: LFC 35 — Passenger Air Bag Circuit Low Resistance or Short 501-20B-54
Pinpoint Test N: LFC 41 — RH Primary Crash Sensor Feed / Return Circuit Open 501-20B-56
Pinpoint Test O: LFC 42 — LH Primary Crash Sensor Feed / Return Circuit Open 501-20B-59
Pinpoint Test P: LFC 44 — RH Primary Crash Sensor Not Mounted to Vehicle Properly 501-20B-61
Pinpoint Test Q: LFC 45 — LH Primary Crash Sensor Not Mounted to Vehicle Properly 501-20B-63
Pinpoint Test R: LFC 52 — Backup Power Supply Voltage Boost Fault 501-20B-68
Pinpoint Test S: LFC 53 — Primary Crash Sensor Circuits Resistance to Ground or Air Bag Diagnostic Monitor Fault 501-20B-72
Pinpoint Tests — Air Bag Supplemental Restraint System (SRS) 501-20B-12
Removal and Installation 501-20B-75

Alphabetical Index

Occupant Restraints — Passive — Supplemental Air Bag System (Continued)
Rapid Continuous Flashing of Air Bag Indicator (No LFC) — All Primary Crash Sensors Disconnected 501-20B-74
Reactivation Procedure 501-20B-9
Specifications 501-20B-95
Sensor — Air Bag Safing 501-20B-78
Sensor — Primary Crash 501-20B-75
Symptom Chart 501-20B-11

R

Rear View Mirrors 501-09-1
Description and Operation 501-09-2
Diagnosis and Testing 501-09-3
Inspection and Verification 501-09-4
Mirror — Control 501-09-134
Mirror — Glass, Outside 501-09-130
Mirror — Inside Rear View 501-09-134
Mirror — Lamp and Turn Signal Indicator Assembly 501-09-132
Mirror — Motor 501-09-131
Mirror — Power, Outside Rear View 501-09-128
Mirrors 501-09-2
501-09-3
Pinpoint Tests 501-09-9
Removal and Installation 501-09-128
Specifications 501-09-136
Symptom Chart 501-09-8

Receiver and Audio Media Player 415-01-1
Audio System 415-01-2
415-01-4
CD Changer 415-01-6
Description and Operation 415-01-2
Diagnosis and Testing 415-01-4
Removal and Installation 415-01-5
Radio Amplifier 415-01-8
Radio Chassis / Integrated Control Panel 415-01-5
Specifications 415-01-9

Remote Convenience 419-02-1
Description and Operation 419-02-2
Diagnosis and Testing 419-02-3

Remote Convenience (Continued)
General Procedures 419-02-4
Inspection and Verification 419-02-3
Pinpoint Tests 419-02-3
Programming 419-02-4
Symptom Chart 419-02-3
Universal Transmitter 419-02-2
419-02-3

S

Seating 501-10-1
Armrest — Rear 501-10-186
Description and Operation 501-10-2
Diagnosis and Testing 501-10-4
Disassembly and Assembly 501-10-192
Inspection and Verification 501-10-5
Latch — Front Seat Back 501-10-190
Pinpoint Tests 501-10-13
Removal and Installation 501-10-185
Specifications 501-10-199
Seat — Front 501-10-187
501-10-192
Seat — Rear 501-10-189
Seats 501-10-2
501-10-4
Switch — Seat Regulator Control 501-10-185
Symptom Chart 501-10-12

Sliding Roof Panel 501-17-1
Air Deflector 501-17-41
Control Module — Wire Harness 501-17-44
Control Module 501-17-43
Description and Operation 501-17-2
Diagnosis and Testing 501-17-4
General Procedures 501-17-45
Glass — Roof Sliding Outer Panel 501-17-35
Height Adjustment 501-17-45
Inspection and Verification 501-17-4
Motor Synchronization 501-17-47
Motor 501-17-38
Opening Shield — Roof Sliding Panel 501-17-37
Panel — Roof Sliding 501-17-32
Pinpoint Tests 501-17-5
Removal and Installation 501-17-32
Specifications 501-17-49

Ford Motor Company Publication

Alphabetical Index

Sliding Roof Panel (Continued)
Sliding Roof Panel 501-17-2
501-17-4
Switch 501-17-42
Symptom Chart 501-17-4
Trough Assembly 501-17-40

Speakers 415-03-1
Description and Operation 415-03-2
Diagnosis and Testing 415-03-2
Removal and Installation 415-03-3
Specifications 415-03-4
Speaker — Door Mounted 415-03-3
Speaker — Rear 415-03-3
Speakers 415-03-2

W

Wipers and Washers 501-16-1

Wipers and Washers (Continued)
Control Module — Windshield Wiper 501-16-41
Description and Operation 501-16-2
Diagnosis and Testing 501-16-5
Inspection and Verification 501-16-5
Motor — Windshield Wiper 501-16-38
Mounting Arm and Pivot Shaft — Assembly 501-16-35
Pinpoint Tests 501-16-7
Pivot Arm 501-16-33
Removal and Installation 501-16-33
Specifications 501-16-42
Symptom Chart 501-16-5
Washer Pump and Reservoir 501-16-38
Wiper and Washer System 501-16-2
501-16-5

Official Licensed Product
Ford Motor Company

WE WANT TO HEAR FROM YOU

Your suggestions will help us to improve future editions of this manual.

Instructions:

- Use only one form for each publication
- Use separate form for each concern
- **Do not** use this form to order publications
- Mail the completed form to the address on the reverse side

OR

- FAX the completed form to (313) 390-8727

Date:_____

Publication:

- ☐ Passenger Car Workshop Manual
- ☐ Owner Guide
- ☐ Wiring Diagram
- ☐ Body Repair Manual
- ☐ Truck Workshop Manual
- ☐ PC/ED Manual
- ☐ EVTM

Vehicle Line:_____ **Model Year:**_____

Please check the area in which the concern is located in the publication:

- ☐ Service Information
- ☐ Body
- ☐ Frame and Mounting
- ☐ Engine
- ☐ Suspension
- ☐ Driveline
- ☐ Brakes
- ☐ Transmission/Transaxle
- ☐ Clutch
- ☐ Exhaust
- ☐ Fuel
- ☐ Climate Control
- ☐ Instrumental Warning
- ☐ Battery/Charging
- ☐ Audio
- ☐ Lighting
- ☐ Electrical
- ☐ Schematics
- ☐ Pinpoint Test

Section and Pages:_____

Official Licensed Product
Ford Motor Company

Explain your concern or suggestion below: *(Please print)*

_____

_____

_____

_____

What do you think is the main cause of your concern?

- ☐ Missing Information
- ☐ Inaccurate Information
- ☐ Incomplete Information

Please tell us who you are: *(Please print)*

Your Name:_____

Company Name:_____

Street:_____

City:_____ **State:**_____ **Zip/Postal Code:**_____

Phone Number:_____ **FAX Number:**_____

Occupation: *(Please mark box)*

- ☐ Ford Dealership Technician
- ☐ Home Mechanic
- ☐ Technician - Other than Ford Dealership
- ☐ Ford Dealership Service Manager
- ☐ Engineer
- ☐ Other:_____

Are there features of this publication that you would like to see changed or expanded?

- ☐ Organization
- ☐ Technical Detail
- ☐ Format and Style
- ☐ Other:_____

How would you suggest we change the publication?

_____

_____

_____

DO NOT STAPLE — USE TRANSPARENT TAPE

NO POSTAGE
NECESSARY
IF MAILED
IN THE
UNITED STATES

BUSINESS REPLY MAIL

FIRST CLASS PERMIT NO. 400 DEARBORN, MI

POSTAGE WILL BE PAID BY ADDRESSEE

Technical Service Publications
Service Manual
P.O. Box 2592
Dearborn, MI 48123-2592

Official Licensed Product
Ford Motor Company